Stepping Motor Drivers

Standard 36V Stepping Motor Driver

BD6290EFV

No.12009EAT03

●Description

BD6290EFV is the simple type that provides the minimum function for driving stepping motor and various protection circuits. As for its basic function, it is a low power consumption bipolar PWM constant current-drive driver with power supply's rated voltage of 36V and rated output current of 0.8A. There are excitation modes of FULL STEP & HALF STEP &, QUARTER STEP mode. This IC contributes to reduction of mounting area, cost down, safety design.

●Feature

1) Power supply: one system drive (rated voltage of 36V)
2) Rated output current: 0.8A
3) Low ON resistance DMOS output
4) Parallel IN drive mode
5) PWM constant current control (self oscillation)
6) Built-in spike noise cancel function (external noise filter is unnecessary)
7) FULL STEP, HALF STEP, QUARTER STEP
8) Power save function
9) Built-in logic input pull-down resistor
10) Power-on reset function
11) Thermal shutdown circuit (TSD)
12) Over current protection circuit (OCP)
13) Under voltage lock out circuit (UVLO)
14) Over voltage lock out circuit (OVLO)
15) Malfunction prevention at the time of no applied power supply (Ghost Supply Prevention Function)
16) Electrostatic discharge: 4kV (HBM specification)
17) Microminiature, ultra-thin and high heat-radiation (exposed metal type) HTSSOP package (BD6391EFV)

●Application

Laser beam printer, Scanner, Photo printer, FAX, Ink jet printer, Mini printer, Sewing machine, Toy, and Robot etc.

This Technical Note does not guarantee the operation (function).
When using this product, run a thorough evaluation and verification before use.

© 2012 ROHM Co., Ltd. All rights reserved.

●Absolute maximum ratings(Ta=25℃)

Item	Symbol	Limit	Unit
Supply voltage	$V_{M1,2}$	-0.2～+36.0	V
Power dissipation	Pd	1.10※1	W
		4.00※2	
Input voltage for control pin	V_{IN}	-0.2～+7.0	V
RNF maximum voltage	V_{RNF}	0.5	V
Maximum output current	I_{OUT}	0.8※3	A/phase
Operating temperature range	T_{opr}	-25～+85	℃
Storage temperature range	T_{stg}	-55～+150	℃
Junction temperature	T_{jmax}	150	℃

※1 70mm×70mm×1.6mm glass epoxy board. Derating in done at 8.8mW/℃ for operating above Ta=25℃.
※2 4-layer recommended board. Derating in done at 32.0mW/℃ for operating above Ta=25℃.
※3 Do not, however exceed Pd, ASO and T_{jmax}=150℃.

●Operating conditions(Ta= -25～+85℃)

Item	Symbol	Limit	Unit
Supply voltage	$V_{M1,2}$	19～28	V
Output current (DC)	I_{OUT}	0.5※4	A/phase

※4 Do not however exceed Pd, ASO.

●Electrical characteristics

(Unless otherwise specified Ta=25℃, V_M=24V)

Item	Symbol	Limit			Unit	Condition
		Min.	Typ.	Max.		
Whole						
Circuit current at standby	I_{VMST}	-	0.6	1.5	mA	PS=L
Circuit current	I_{VM}	-	3.0	7.0	mA	PS=H, VREF=2V
Control input (PHA1, I01, I11, PHA2, I02, I12, P.S.)						
H level input voltage	V_{PSH}	2.0	-	5.5	V	
L level input voltage	V_{PSL}	-	-	0.8	V	
H level input current	I_{PSH}	25	50	80	μA	Control input voltage=5V
L level input current	I_{PSL}	-	0	10	μA	Control input voltage=0V
Output (OUT1A, OUT1B, OUT2A, OUT2B)						
Output ON resistance	R_{ON}	-	2.80	3.60	Ω	I_{OUT} =±0.3A Sum of upper and lower
Output leak current	I_{LEAK}	-	-	10	μA	
Current control						
RNFX input current	I_{RNFX}	-40	-20	-	μA	RNFX=0V
VREF input current	I_{VREF}	-2.0	-0.1	-	μA	VREF=0V
VREF input voltage range	V_{REF}	0	-	2	V	
Comparator threshold 100%	V_{CTHLL}	0.340	0.400	0.460	V	VREF=2V,I0X=L,I1X=L
Comparator threshold 67%	V_{CTHHL}	0.227	0.267	0.307	V	VREF=2V,I0X=H,I1X=L
Comparator threshold 33%	V_{CTHLH}	0.113	0.133	0.153	V	VREF=2V,I0X=L,I1X=H
Minimum on time	t_{ONMIN}	0.3	0.5	1.0	μs	R=39kΩ, C=1000pF

© 2012 ROHM Co., Ltd. All rights reserved.

●Terminal function・Block diagram・Application circuit diagram

Pin No.	Pin name	Function	Pin No.	Pin name	Function
1	PHA1	Logic input terminal	13	I02	Logic input terminal for DAC
2	PGND	Ground terminal	14	I12	Logic input terminal for DAC
3	VM1	Power supply terminal	15	NC	Non connection
4	OUT1A	H bridge output terminal	16	CR2	Connection terminal of CR for setting PWM frequency
5	RNF1	Connection terminal of resistor for output current detection	17	TEST	Terminal for testing (used by connecting with GND)
6	OUT1B	H bridge output terminal	18	NC	Non connection
7	OUT2B	H bridge output terminal	19	GND	Ground terminal
8	RNF2	Connection terminal of resistor for output current detection	20	PS	Power save terminal
9	OUT2A	H bridge output terminal	21	CR1	Connection terminal of CR for setting PWM frequency
10	VM2	Power supply terminal	22	VREF	Output current value setting terminal
11	NC	Non connection	23	I11	Logic input terminal for DAC
12	PHA2	Logic input terminal	24	I01	Logic input terminal for DAC

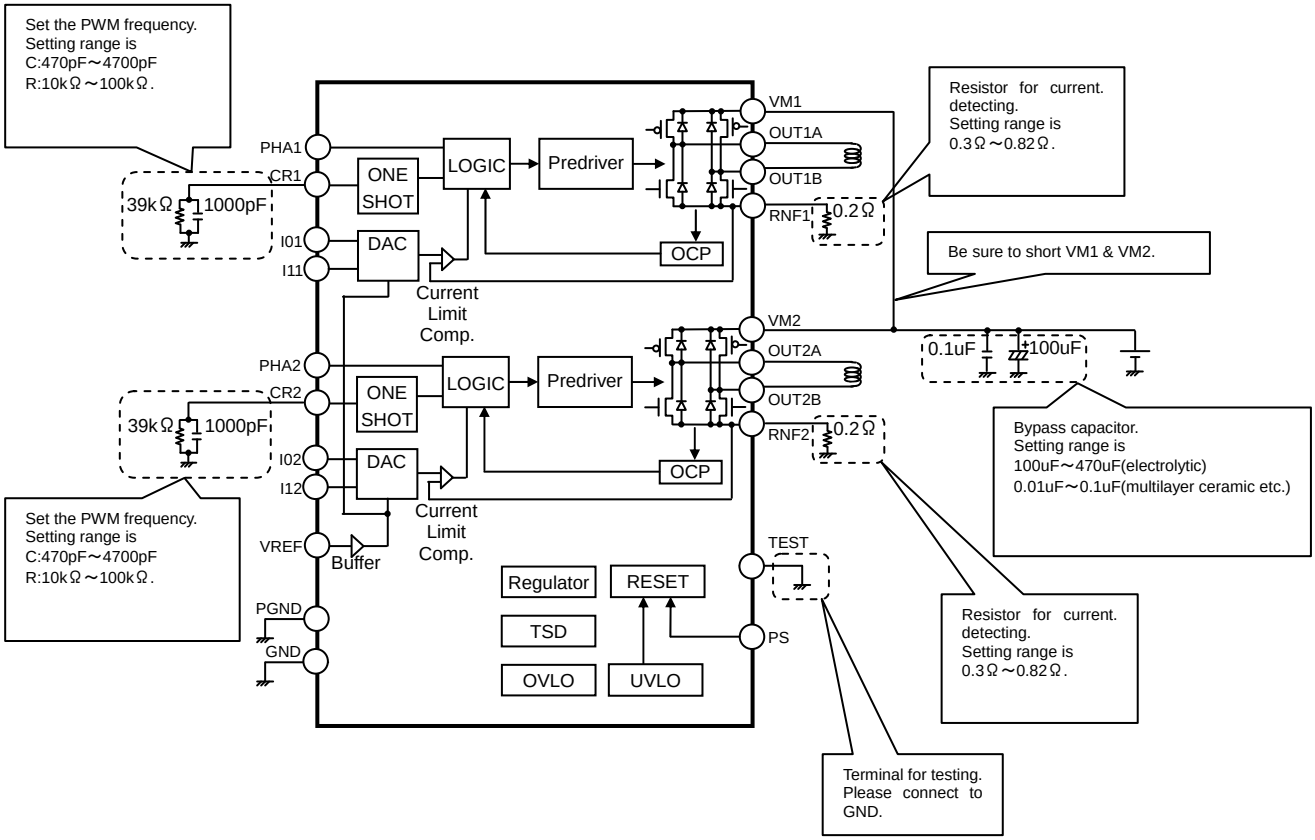

Fig.1 Block diagram & Application circuit diagram

© 2012 ROHM Co., Ltd. All rights reserved.

●Points to notice for terminal description

○PS／Power save terminal

PS can make circuit standby state and make motor output OPEN. Please be careful because there is a delay of 40μs(max.) before it is returned from standby state to normal state and the motor output becomes ACTIVE.

PS	State
L	Standby state (RESET)
H	ACTIVE

○PHA1,PHA2／Logic input terminal

These terminals decide output state.

PHAX	OUTXA	OUTXB
L	L	H
H	H	L

○I01,I02,I11,I12／Logic input terminal for DAC

These terminals decide internal DAC output voltage for current limit.

I0X	I1X	Output current level(%)
L	L	100
H	L	67
L	H	33
H	H	0

(I0X,I1X)=(H,H) : motor output are open.

●Protection Circuits

○Thermal Shutdown (TSD)

This IC has a built-in thermal shutdown circuit for thermal protection. When the IC's chip temperature rises above 175℃ (Typ.), the motor output becomes OPEN. Also, when the temperature returns to under 150℃ (Typ.), it automatically returns to normal operation. However, even when TSD is in operation, if heat is continued to be added externally, heat overdrive can lead to destruction.

○Over Current Protection (OCP)

This IC has a built in over current protection circuit as a provision against destruction when the motor outputs are shorted each other or V_M－motor output or motor output－GND is shorted. This circuit latches the motor output to OPEN condition when the regulated threshold current flows for 4μs (Typ.). It returns with power reactivation or a reset of the PS terminal. The over current protection circuit's only aim is to prevent the destruction of the IC from irregular situations such as motor output shorts, and is not meant to be used as protection or security for the set. Therefore, sets should not be designed to take into account this circuit's functions. After OCP operating, if irregular situations continue and the return by power reactivation or a reset of the PS terminal is carried out repeatedly, then OCP operates repeatedly and the IC may generate heat or otherwise deteriorate. When the L value of the wiring is great due to the wiring being long, after the over current has flowed and the output terminal voltage jumps up and the absolute maximum values may be exceeded and as a result, there is a possibility of destruction. Also, when current which is over the output current rating and under the OCP detection current flows, the IC can heat up to over T_{jmax} =150℃ and can deteriorate, so current which exceeds the output rating should not be applied.

○Under Voltage Lock Out (UVLO)

This IC has a built-in under voltage lock out function to prevent false operation such as IC output during power supply under voltage. When the applied voltage to the V_M terminal goes under 15V (Typ.), the motor output is set to OPEN. This switching voltage has a 1V (Typ.) hysteresis to prevent false operation by noise etc. Please be aware that this circuit does not operate during power save mode.

○Over Voltage Lock Out (OVLO)

This IC has a built-in over voltage lock out function to protect the IC output and the motor during power supply over voltage. When the applied voltage to the VM terminal goes over 32V (Typ.), the motor output is set to OPEN. This switching voltage has a 1V (Typ.) hysteresis and a 4μs (Typ.) mask time to prevent false operation by noise etc. Although this over voltage locked out circuit is built-in, there is a possibility of destruction if the absolute maximum value for power supply voltage is exceeded, therefore the absolute maximum value should not be exceeded. Please be aware that this circuit does not operate during power save mode.

○False operation prevention function in no power supply (Ghost Supply Prevention)

If a logic control signal is input when there is no power supplied to this IC, there is a function which prevents the false operation by voltage supplied via the electrostatic destruction prevention diode from the logic control input terminal to the V_M, to this IC or to another IC's power supply. Therefore, there is no malfunction of the circuit even when voltage is supplied to the logic control input terminal while there is no power supply.

© 2012 ROHM Co., Ltd. All rights reserved.

●Power dissipation

○HTSSOP-B24 Package

HTSSOP-B24 has exposed metal on the back, and it is possible to dissipate heat from a through hole in the back. Also, the back of board as well as the surfaces has large areas of copper foil heat dissipation patterns, greatly increasing power dissipation. The back metal is shorted with the back side of the IC chip, being a GND potential, therefore there is a possibility for malfunction if it is shorted with any potential other than GND, which should be avoided. Also, it is recommended that the back metal is soldered onto the GND to short. Please note that it has been assumed that this product will be used in the condition of this back metal performed heat dissipation treatment for increasing heat dissipation efficiency.

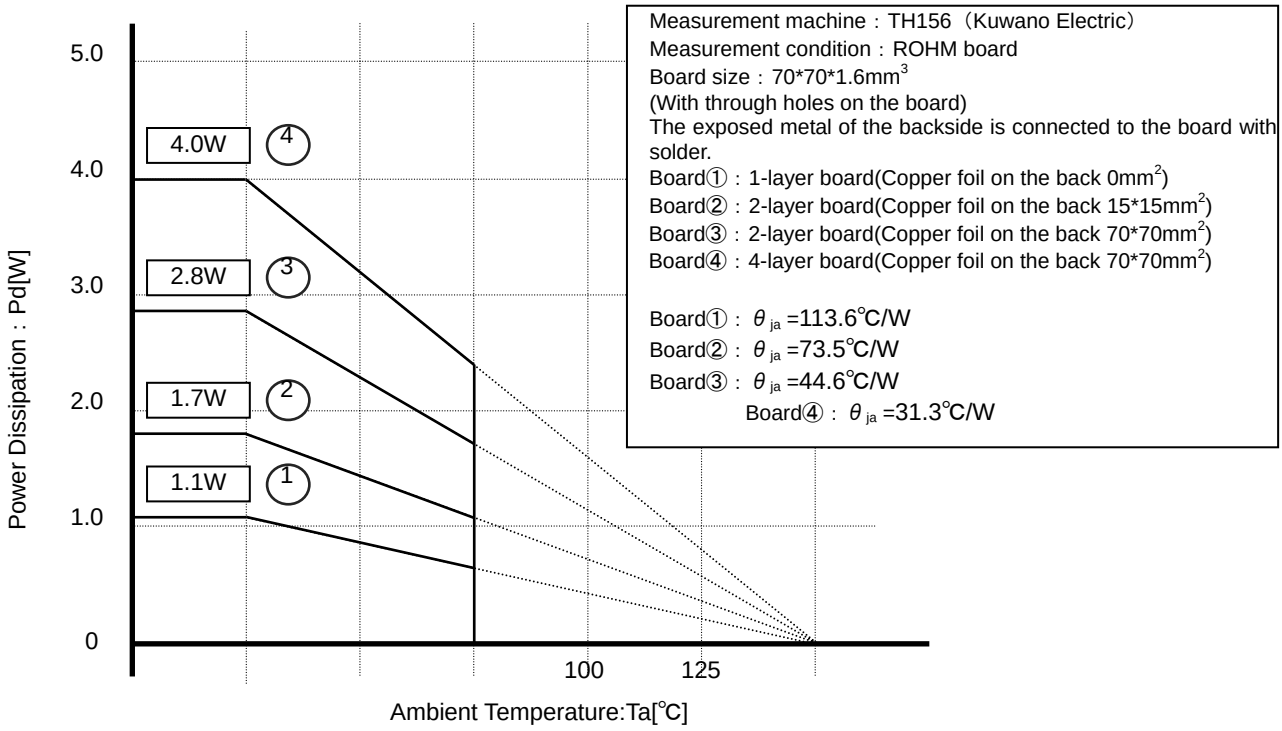

Fig.2 HTSSOP-B24 Derating curve

© 2012 ROHM Co., Ltd. All rights reserved.

●Usage Notes

(1) Absolute maximum ratings

An excess in the absolute maximum ratings, such as supply voltage, temperature range of operating conditions, etc., can break down the devices, thus making impossible to identify breaking mode, such as a short circuit or an open circuit. If any over rated values will expect to exceed the absolute maximum ratings, consider adding circuit protection devices, such as fuses.

(2) Connecting the power supply connector backward

Connecting of the power supply in reverse polarity can damage IC. Take precautions when connecting the power supply lines. An external direction diode can be added.

(3) Power supply Lines

Design PCB layout pattern to provide low impedance GND and supply lines. To obtain a low noise ground and supply line, separate the ground section and supply lines of the digital and analog blocks. Furthermore, for all power supply terminals to ICs, connect a capacitor between the power supply and the GND terminal. When applying electrolytic capacitors in the circuit, not that capacitance characteristic values are reduced at low temperatures.

(4) GND Potential

The potential of GND pin must be minimum potential in all operating conditions.

(5) Thermal design

Use a thermal design that allows for a sufficient margin in light of the power dissipation (Pd) in actual operating conditions. Users should be aware that BD6290EFV has been designed to expose their frames at the back of the package, and should be used with suitable heat dissipation treatment in this area to improve dissipation. As large a dissipation pattern should be taken as possible, not only on the front of the baseboard but also on the back surface.

(6) Inter-pin shorts and mounting errors

When attaching to a printed circuit board, pay close attention to the direction of the IC and displacement. Improper attachment may lead to destruction of the IC. There is also possibility of destruction from short circuits which can be caused by foreign matter entering between outputs or an output and the power supply or GND.

(7) Operation in a strong electric field

Use caution when using the IC in the presence of a strong electromagnetic field as doing so may cause the IC to malfunction.

(8) ASO

When using the IC, set the output transistor so that it does not exceed absolute maximum ratings or ASO.

(9) Thermal shutdown circuit

The IC has a built-in thermal shutdown circuit (TSD circuit). If the chip temperature becomes T_{jmax} =150℃, and higher, coil output to the motor will be open. The TSD circuit is designed only to shut the IC off to prevent runaway thermal operation. It is not designed to protect or indemnify peripheral equipment. Do not use the TSD function to protect peripheral equipment.

TSD on temperature [℃] (Typ.)	Hysteresis Temperature [℃] (Typ.)
175	25

(10) Inspection of the application board

During inspection of the application board, if a capacitor is connected to a pin with low impedance there is a possibility that it could cause stress to the IC, therefore an electrical discharge should be performed after each process. Also, as a measure again electrostatic discharge, it should be earthed during the assembly process and special care should be taken during transport or storage. Furthermore, when connecting to the jig during the inspection process, the power supply should first be turned off and then removed before the inspection.

© 2012 ROHM Co., Ltd. All rights reserved.

(11) Input terminal of IC

This IC is a monolithic IC, and between each element there is a P+ isolation for element partition and a P substrate.
This P layer and each element's N layer make up the P-N junction, and various parasitic elements are made up.
For example, when the resistance and transistor are connected to the terminal as shown in figure 3,

○When GND＞(Terminal A) at the resistance and GND＞(Terminal B) at the transistor (NPN), the P-N junction operates as a parasitic diode.

○Also, when GND＞(Terminal B) at the transistor (NPN) The parasitic NPN transistor operates with the N layers of other elements close to the aforementioned parasitic diode.

Because of the IC's structure, the creation of parasitic elements is inevitable from the electrical potential relationship. The operation of parasitic elements causes interference in circuit operation, and can lead to malfunction and destruction. Therefore, be careful not to use it in a way which causes the parasitic elements to operate, such as by applying voltage that is lower than the GND (P substrate) to the input terminal.

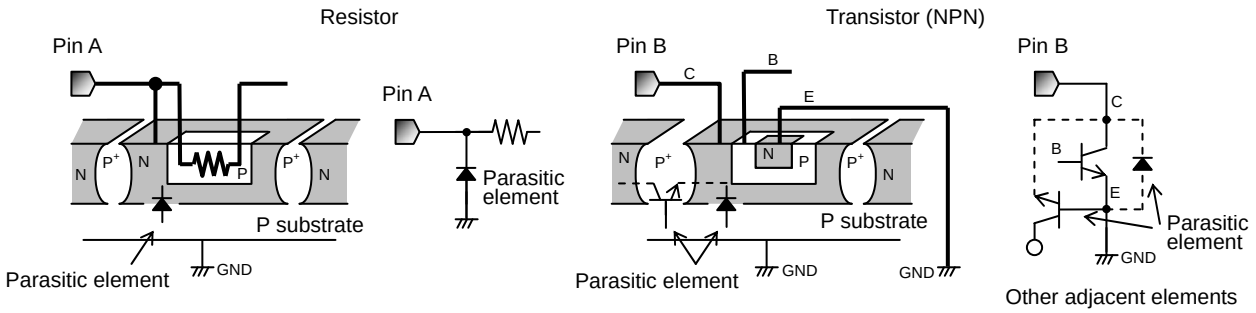

Fig.3 Pattern Diagram of Parasitic Element

(12) Ground Wiring Patterns

When using both small signal and large current GND patterns, it is recommended to isolate the two ground patterns, placing a single ground point at the application's reference point so that the pattern wiring resistance and voltage variations caused by large currents do not cause variations in the small signal ground voltage. Be careful not to change the GND wiring pattern potential of any external components, either.

(13) TEST Terminal

Be sure to connect TEST pin to GND.

© 2012 ROHM Co., Ltd. All rights reserved.

●Ordering part number

B D 6 2 9 0 E F V	-	E 2

形名

パッケージ
EFV=HTSSOP-B24

包装、フォーミング仕様
E2: リール状エンボステーピング

HTSSOP-B24

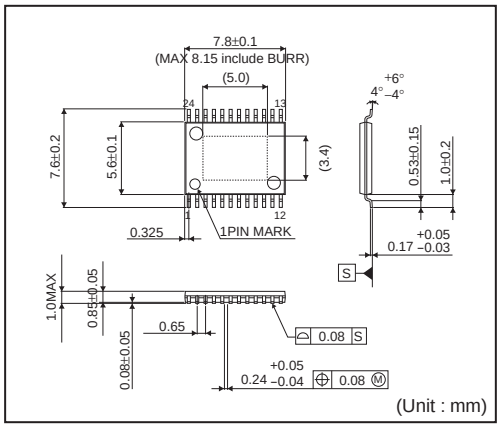

<Tape and Reel information>

Tape	Embossed carrier tape (with dry pack)
Quantity	2000pcs
Direction of feed	E2 (The direction is the 1pin of product is at the upper left when you hold reel on the left hand and you pull out the tape on the right hand)

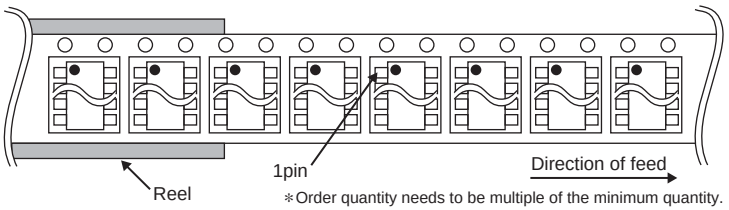

∗Order quantity needs to be multiple of the minimum quantity.

© 2012 ROHM Co., Ltd. All rights reserved.

Notice

Precaution on using ROHM Products

1. Our Products are designed and manufactured for application in ordinary electronic equipments (such as AV equipment, OA equipment, telecommunication equipment, home electronic appliances, amusement equipment, etc.). If you intend to use our Products in devices requiring extremely high reliability (such as medical equipment (Note 1), transport equipment, traffic equipment, aircraft/spacecraft, nuclear power controllers, fuel controllers, car equipment including car accessories, safety devices, etc.) and whose malfunction or failure may cause loss of human life, bodily injury or serious damage to property ("Specific Applications"), please consult with the ROHM sales representative in advance. Unless otherwise agreed in writing by ROHM in advance, ROHM shall not be in any way responsible or liable for any damages, expenses or losses incurred by you or third parties arising from the use of any ROHM's Products for Specific Applications.

(Note1) Medical Equipment Classification of the Specific Applications

JAPAN	USA	EU	CHINA
CLASSⅢ	CLASSⅢ	CLASSⅡb	CLASSⅢ
CLASSⅣ		CLASSⅢ	

2. ROHM designs and manufactures its Products subject to strict quality control system. However, semiconductor products can fail or malfunction at a certain rate. Please be sure to implement, at your own responsibilities, adequate safety measures including but not limited to fail-safe design against the physical injury, damage to any property, which a failure or malfunction of our Products may cause. The following are examples of safety measures:
   [a] Installation of protection circuits or other protective devices to improve system safety
   [b] Installation of redundant circuits to reduce the impact of single or multiple circuit failure

3. Our Products are designed and manufactured for use under standard conditions and not under any special or extraordinary environments or conditions, as exemplified below. Accordingly, ROHM shall not be in any way responsible or liable for any damages, expenses or losses arising from the use of any ROHM's Products under any special or extraordinary environments or conditions. If you intend to use our Products under any special or extraordinary environments or conditions (as exemplified below), your independent verification and confirmation of product performance, reliability, etc, prior to use, must be necessary:
   [a] Use of our Products in any types of liquid, including water, oils, chemicals, and organic solvents
   [b] Use of our Products outdoors or in places where the Products are exposed to direct sunlight or dust
   [c] Use of our Products in places where the Products are exposed to sea wind or corrosive gases, including Cl_2, H_2S, NH_3, SO_2, and NO_2
   [d] Use of our Products in places where the Products are exposed to static electricity or electromagnetic waves
   [e] Use of our Products in proximity to heat-producing components, plastic cords, or other flammable items
   [f] Sealing or coating our Products with resin or other coating materials
   [g] Use of our Products without cleaning residue of flux (even if you use no-clean type fluxes, cleaning residue of flux is recommended); or Washing our Products by using water or water-soluble cleaning agents for cleaning residue after soldering
   [h] Use of the Products in places subject to dew condensation

4. The Products are not subject to radiation-proof design.

5. Please verify and confirm characteristics of the final or mounted products in using the Products.

6. In particular, if a transient load (a large amount of load applied in a short period of time, such as pulse. is applied, confirmation of performance characteristics after on-board mounting is strongly recommended. Avoid applying power exceeding normal rated power; exceeding the power rating under steady-state loading condition may negatively affect product performance and reliability.

7. De-rate Power Dissipation (Pd) depending on Ambient temperature (Ta). When used in sealed area, confirm the actual ambient temperature.

8. Confirm that operation temperature is within the specified range described in the product specification.

9. ROHM shall not be in any way responsible or liable for failure induced under deviant condition from what is defined in this document.

Precaution for Mounting / Circuit board design

1. When a highly active halogenous (chlorine, bromine, etc.) flux is used, the residue of flux may negatively affect product performance and reliability.

2. In principle, the reflow soldering method must be used; if flow soldering method is preferred, please consult with the ROHM representative in advance.

For details, please refer to ROHM Mounting specification

© 2014 ROHM Co., Ltd. All rights reserved.

Precautions Regarding Application Examples and External Circuits

1. If change is made to the constant of an external circuit, please allow a sufficient margin considering variations of the characteristics of the Products and external components, including transient characteristics, as well as static characteristics.

2. You agree that application notes, reference designs, and associated data and information contained in this document are presented only as guidance for Products use. Therefore, in case you use such information, you are solely responsible for it and you must exercise your own independent verification and judgment in the use of such information contained in this document. ROHM shall not be in any way responsible or liable for any damages, expenses or losses incurred by you or third parties arising from the use of such information.

Precaution for Electrostatic

This Product is electrostatic sensitive product, which may be damaged due to electrostatic discharge. Please take proper caution in your manufacturing process and storage so that voltage exceeding the Products maximum rating will not be applied to Products. Please take special care under dry condition (e.g. Grounding of human body / equipment / solder iron, isolation from charged objects, setting of Ionizer, friction prevention and temperature / humidity control).

Precaution for Storage / Transportation

1. Product performance and soldered connections may deteriorate if the Products are stored in the places where:
   [a] the Products are exposed to sea winds or corrosive gases, including Cl2, H2S, NH3, SO2, and NO2
   [b] the temperature or humidity exceeds those recommended by ROHM
   [c] the Products are exposed to direct sunshine or condensation
   [d] the Products are exposed to high Electrostatic

2. Even under ROHM recommended storage condition, solderability of products out of recommended storage time period may be degraded. It is strongly recommended to confirm solderability before using Products of which storage time is exceeding the recommended storage time period.

3. Store / transport cartons in the correct direction, which is indicated on a carton with a symbol. Otherwise bent leads may occur due to excessive stress applied when dropping of a carton.

4. Use Products within the specified time after opening a humidity barrier bag. Baking is required before using Products of which storage time is exceeding the recommended storage time period.

Precaution for Product Label

QR code printed on ROHM Products label is for ROHM's internal use only.

Precaution for Disposition

When disposing Products please dispose them properly using an authorized industry waste company.

Precaution for Foreign Exchange and Foreign Trade act

Since our Products might fall under controlled goods prescribed by the applicable foreign exchange and foreign trade act, please consult with ROHM representative in case of export.

Precaution Regarding Intellectual Property Rights

1. All information and data including but not limited to application example contained in this document is for reference only. ROHM does not warrant that foregoing information or data will not infringe any intellectual property rights or any other rights of any third party regarding such information or data. ROHM shall not be in any way responsible or liable for infringement of any intellectual property rights or other damages arising from use of such information or data.:

2. No license, expressly or implied, is granted hereby under any intellectual property rights or other rights of ROHM or any third parties with respect to the information contained in this document.

Other Precaution

1. This document may not be reprinted or reproduced, in whole or in part, without prior written consent of ROHM.

2. The Products may not be disassembled, converted, modified, reproduced or otherwise changed without prior written consent of ROHM.

3. In no event shall you use in any way whatsoever the Products and the related technical information contained in the Products or this document for any military purposes, including but not limited to, the development of mass-destruction weapons.

4. The proper names of companies or products described in this document are trademarks or registered trademarks of ROHM, its affiliated companies or third parties.

© 2014 ROHM Co., Ltd. All rights reserved.

General Precaution

1. Before you use our Products, you are requested to carefully read this document and fully understand its contents. ROHM shall not be in any way responsible or liable for failure, malfunction or accident arising from the use of any ROHM's Products against warning, caution or note contained in this document.

2. All information contained in this document is current as of the issuing date and subject to change without any prior notice. Before purchasing or using ROHM's Products, please confirm the latest information with a ROHM sales representative.

3. The information contained in this document is provided on an "as is" basis and ROHM does not warrant that all information contained in this document is accurate and/or error-free. ROHM shall not be in any way responsible or liable for any damages, expenses or losses incurred by you or third parties resulting from inaccuracy or errors of or concerning such information.

© 2014 ROHM Co., Ltd. All rights reserved.

Mouser Electronics

Authorized Distributor

Click to View Pricing, Inventory, Delivery & Lifecycle Information:

ROHM Semiconductor:

BD6290EFV-E2

OCEAN CHIPS
Океан Электроники
Поставка электронных компонентов

Компания «Океан Электроники» предлагает заключение долгосрочных отношений при поставках импортных электронных компонентов на взаимовыгодных условиях!

Наши преимущества:

- Поставка оригинальных импортных электронных компонентов напрямую с производств Америки, Европы и Азии, а так же с крупнейших складов мира;
- Широкая линейка поставок активных и пассивных импортных электронных компонентов (более 30 млн. наименований);
- Поставка сложных, дефицитных, либо снятых с производства позиций;
- Оперативные сроки поставки под заказ (от 5 рабочих дней);
- Экспресс доставка в любую точку России;
- Помощь Конструкторского Отдела и консультации квалифицированных инженеров;
- Техническая поддержка проекта, помощь в подборе аналогов, поставка прототипов;
- Поставка электронных компонентов под контролем ВП;
- Система менеджмента качества сертифицирована по Международному стандарту ISO 9001;
- При необходимости вся продукция военного и аэрокосмического назначения проходит испытания и сертификацию в лаборатории (по согласованию с заказчиком);
- Поставка специализированных компонентов военного и аэрокосмического уровня качества (Xilinx, Altera, Analog Devices, Intersil, Interpoint, Microsemi, Actel, Aeroflex, Peregrine, VPT, Syfer, Eurofarad, Texas Instruments, MS Kennedy, Miteq, Cobham, E2V, MA-COM, Hittite, Mini-Circuits, General Dynamics и др.);

Компания «Океан Электроники» является официальным дистрибьютором и эксклюзивным представителем в России одного из крупнейших производителей разъемов военного и аэрокосмического назначения **«JONHON»**, а так же официальным дистрибьютором и эксклюзивным представителем в России производителя высокотехнологичных и надежных решений для передачи СВЧ сигналов **«FORSTAR»**.

AVIC JONHON

«JONHON» (основан в 1970 г.)

Разъемы специального, военного и аэрокосмического назначения:

(Применяются в военной, авиационной, аэрокосмической, морской, железнодорожной, горно- и нефтедобывающей отраслях промышленности)

«FORSTAR» (основан в 1998 г.)

ВЧ соединители, коаксиальные кабели, кабельные сборки и микроволновые компоненты:

(Применяются в телекоммуникациях гражданского и специального назначения, в средствах связи, РЛС, а так же военной, авиационной и аэрокосмической отраслях промышленности).

FORSTAR®

Телефон: 8 (812) 309-75-97 (многоканальный)
Факс: 8 (812) 320-03-32
Электронная почта: ocean@oceanchips.ru
Web: http://oceanchips.ru/
Адрес: 198099, г. Санкт-Петербург, ул. Калинина, д. 2, корп. 4, лит. А