2-WIRE DIGITAL TEMPERATURE SENSOR

© ABLIC Inc., 2009-2015

Rev.2.2_02

S-5851A Series is a 2-wire serial I/O digital temperature sensor. This IC measures temperature with resolution of 0.0625°C without external parts. This IC is ideal for wide-ranging temperature measurement for various applications.
A temperature sensor, a reference voltage generation circuit, a ΔΣ type A/D converter and interface bus are integrated in a chip, and packages SNT-6A and SOT-23-6 available for this IC.

■ Features

- Low voltage operation : V_{DD} (min.) = 2.7 V
- Low current consumption : 45 μA typ. (+25°C)
  1 μA typ. (+25°C at shutdown)
- High accuracy : ±2.0°C (max.) −25°C to +85°C
  ±3.0°C (max.) −40°C to +125°C
- Temperature resolution : 0.0625°C
- Digital output : 2-wire serial interface
- Maximum operating frequency : 400 kHz
- Low power supply voltage detection circuit
- Lead-free, Sn 100%, halogen-free*1

***1.** Refer to "■ **Product Name Structure**" for details.

■ Applications

- Temperature monitor for power supply
- Temperature monitor for battery
- Air conditioning system
- Various electronics devices

■ Packages

- SNT-6A
- SOT-23-6

■ Block Diagram

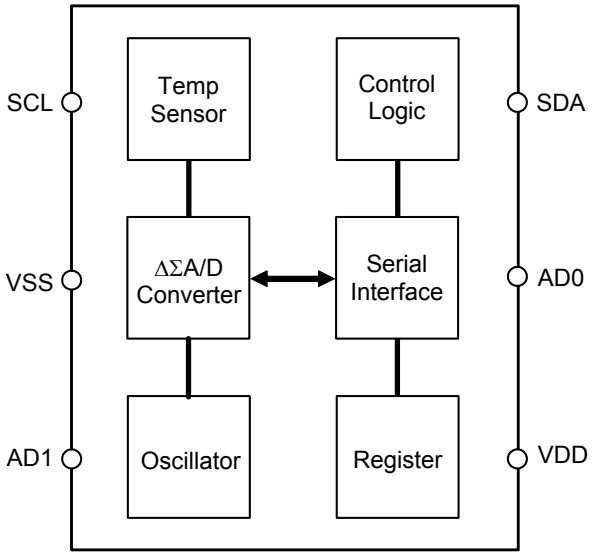

Figure 1

■ Product Name Structure

1. Product name

(1) SNT-6A

S-5851AAA - I6T1 U

- U: Environmental code
  - U : Lead-free (Sn 100%), halogen-free
- I6T1: Package name (abbreviated) and IC packing specification*1
  - I6T1 : SNT-6A, Tape
- S-5851AAA: Product name

***1.** Refer to the tape drawing.

(2) SOT-23-6

S-5851AAA - M6T1 x

- x: Environmental code
  - U : Lead-free (Sn 100%), halogen-free
  - S : Lead-free, halogen-free
- M6T1: Package name (abbreviated) and IC packing specification*1
  - M6T1 : SOT-23-6, Tape
- S-5851AAA: Product name

***1.** Refer to the tape drawing.

2. Package

Package Name	Drawing Code			
	Package	Tape	Reel	Land
SNT-6A	PG006-A-P-SD	PG006-A-C-SD	PG006-A-R-SD	PG006-A-L-SD
SOT-23-6	MP006-A-P-SD	MP006-A-C-SD	MP006-A-R-SD	—

3. Product name list

Table 1

Product name	Package
S-5851AAA-I6T1U	SNT-6A
S-5851AAA-M6T1y	SOT-23-6

Remark 1 y: S or U
2. Please select products of environmental code = U for Sn 100%, halogen-free products.

■ Pin Configuration

SNT-6A
Top view

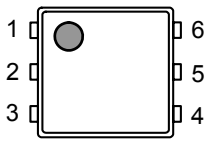

Figure 2

Table 2

Pin No.	Symbol	Description
1	AD1	Address input
2	VSS	GND
3	SCL	Input for serial clock
4	SDA	I/O for serial data
5	AD0	Address input
6	VDD	Power supply

Remark See Dimensions for details of the package drawings.

SOT-23-6
Top view

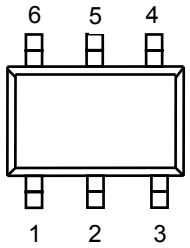

Figure 3

Table 3

Pin No.	Symbol	Description
1	SCL	Input for serial clock
2	VSS	GND
3	AD1	Address input
4	VDD	Power supply
5	AD0	Address input
6	SDA	I/O for serial data

Remark See Dimensions for details of the package drawings.

■ Pin Functions

1. AD0, AD1 pins (Address input)

To set the slave address, connect the AD0 and AD1 pins to V_{SS} / V_{DD} or set them open. When connecting them to V_{SS} / V_{DD}, set the value for a resistor at 500 Ω or less. When setting them open, avoid to apply noise. The value for capacitor is 100 pF or less for the AD0 and AD1 pins.

Users are able to set 8 types of slave address by using the combination of the AD0 and AD1 pins.

The S-5851A Series verifies if the slave address set by user matches with the slave address transmitted from the master device or not, so that one S-5851A Series is selected from the devices connected onto the bus.

2. SDA pin (I/O for serial data)

The SDA pin transmits serial data bi-directionally, is comprised of a signal input pin and a pin with Nch open drain output. In use, generally, connect the SDA line to any other device which has the open-drain or open-collector output with Wired-OR connection by pulling up to V_{DD} by a resistor. **Figure 4** shows the relation with an output load.

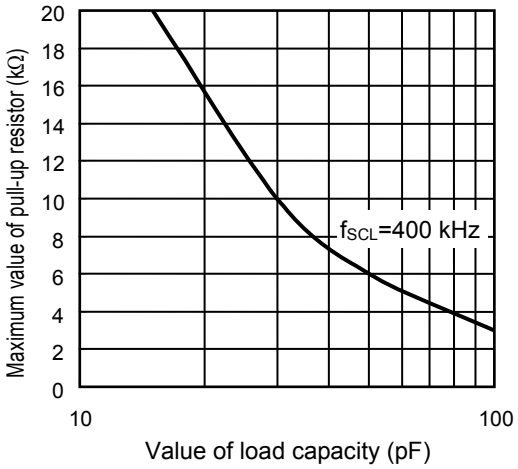

Figure 4 Output Load

3. SCL pin (Input for serial clock)

The SCL pin is an input pin for serial clock, processes a signal at a rising / falling edge of SCL clock. Pay attention fully to the rising / falling time and comply with specifications.

■ Equivalent Circuits of Input, I/O pins

The SCL, AD0 and AD1 pins are CMOS input pins. The SDA pin works as both Nch open drain output pin and CMOS input pin. The equivalent circuits are follows.

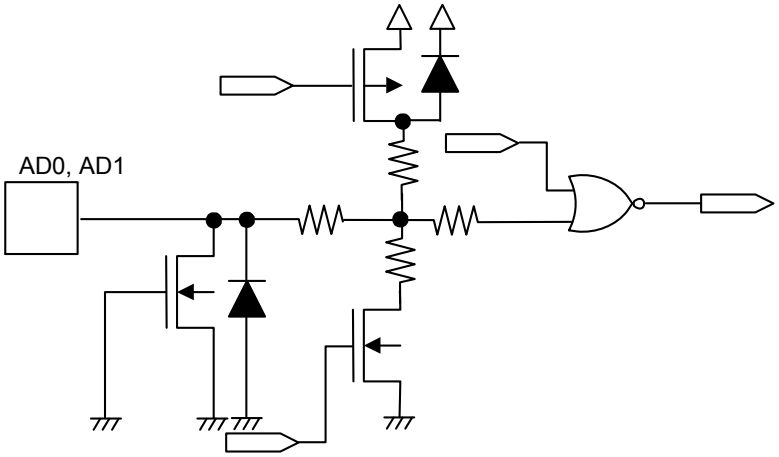

Figure 5 AD0, AD1 Pins

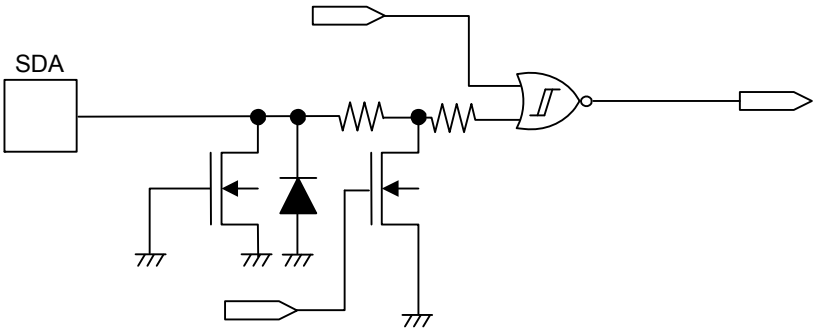

Figure 6 SDA Pin

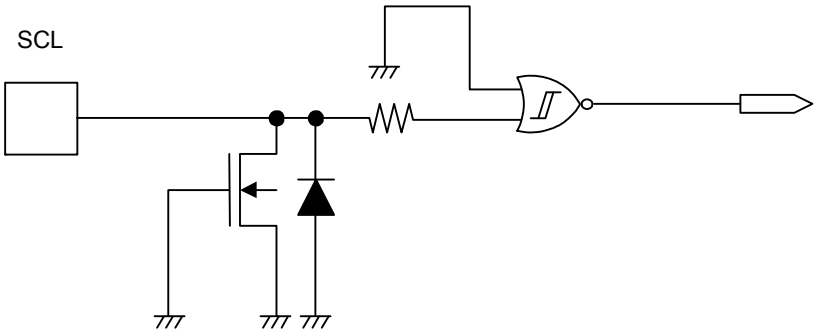

Figure 7 SCL Pin

■ Absolute Maximum Ratings

Table 4

(Ta = +25°C unless otherwise specified)

Item		Symbol	Ratings	Unit
Power supply voltage (V_{SS} = 0 V)		V_{DD}	V_{SS}−0.3 to V_{SS}+6.0	V
SCL, SDA pin voltage		V_{SCL}, V_{SDA}	V_{SS}−0.3 to V_{SS}+6.0	V
AD0, AD1 pin voltage		V_{AD0}, V_{AD1}	V_{SS}−0.3 to V_{DD}+0.3	V
Power dissipation	SNT-6A	P_D	400*1	mW
	SOT-23-6		650*1	mW
Operation ambient temperature		T_{opr}	−40 to +125	°C
Storage temperature		T_{stg}	−55 to +150	°C

***1.** When mounted on board
[Mounted board]
(1) Board size : 114.3 mm × 76.2 mm × t1.6 mm
(2) Board name : JEDEC STANDARD51-7

Caution The absolute maximum ratings are rated values exceeding which the product could suffer physical damage. These values must therefore not be exceeded under any conditions.

■ Pin Capacitance

Table 5

(Ta = 25°C, f = 1.0 MHz, V_{DD} = 5.0 V)

Item	Symbol	Condition	Min.	Max.	Unit
Input capacitance	C_{IN}	V_{IN} = 0 V (SCL, AD0, AD1)	—	10	pF
I/O capacitance	$C_{I/O}$	V_{IN} = 0 V (SDA)	—	10	pF

■ Temperature Characteristics

Table 6

(Ta = 25°C, V_{SS} = 0 V unless otherwise specified)

Item	Symbol	Condition	Min.	Typ.	Max.	Unit
Operation ambient temperature	T_{opr}	—	−40	—	+125	°C
Temperature accuracy	T_{ACC1}	−25°C to +85°C	—	±0.5	±2.0	°C
	T_{ACC2}	−40°C to +125°C	—	±1.0	±3.0	°C
Temperature resolution	T_{RES}	—	—	0.0625	—	°C
A/D resolution	R_{ESO}	—	—	12	—	bits
Temperature update time*1	t_{CNV}	—	—	320	500	ms

***1.** Although within this temperature update time, reading data is possible as many times as needed.

■ DC Electrical Characteristics

Table 7

(Ta = 25°C, V_{SS} = 0 V unless otherwise specified)

Item	Symbol	Condition	Min.	Typ.	Max.	Unit
Power supply voltage	V_{DD}	—	2.7	—	5.5	V
Current consumption at operation	I_{DD1}	Serial bus in non-active	—	45	60	μA
	I_{DD2}	Serial bus in active SCL clock frequency = 400 kHz V_{DD} = 3.3 V	—	80	—	μA
Current consumption at shutdown	I_{DD3}	Serial bus in non-active Connect SCL, SDA to VSS or VDD	—	1.0	5.0	μA
	I_{DD4}	Serial bus in active SCL clock frequency = 400 kHz V_{DD} = 3.3 V	—	30	—	μA
High level input voltage 1	V_{IH1}	SCL, SDA	0.7×V_{DD}	—	V_{SS}+6.0	V
High level input voltage 2	V_{IH2}	AD0, AD1	0.9×V_{DD}	—	V_{DD}	V
Low level input voltage 1	V_{IL1}	SCL, SDA	V_{SS}	—	0.3×V_{DD}	V
Low level input voltage 2	V_{IL2}	AD0, AD1	V_{SS}	—	0.1×V_{DD}	V
Input leakage current	I_{LI}	V_{IN} = 0 V to 5.5 V (SCL, AD0, AD1)	—	0.1	1.0	μA
I/O leakage current	I_{LO}	V_{IN} = 0 V to 5.5 V (SDA)	—	0.1	1.0	μA
Low level output voltage	V_{OL}	I_{OL} = 3 mA	V_{SS}	—	0.4	V

■ AC Electrical Characteristics

Table 8 Measurement Conditions

Input pulse voltage	$V_{IH} = 0.8 \times V_{DD}$, $V_{IL} = 0.2 \times V_{DD}$
Input pulse rise/fall time	20 ns or less
Output reference voltage	$V_{OH} = 0.7 \times V_{DD}$, $V_{OL} = 0.3 \times V_{DD}$
Output load	100 pF

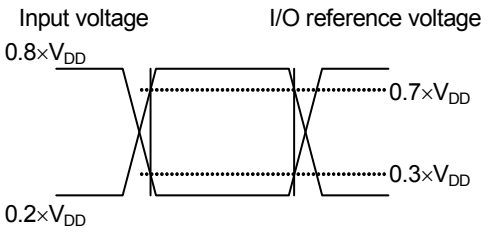

Figure 8 AC Measurement I/O Waveform

Table 9

(Ta = 25°C, V_{SS} = 0 V unless otherwise specified)

Item	Symbol	Min.	Typ.	Max.	Unit
Clock frequency	f_{SCL}	—	—	400	kHz
Bus release time	t_{BUF}	600	—	—	ns
Start condition hold time	$t_{HD.STA}$	600	—	—	ns
Start condition setup time	$t_{SU.STA}$	600	—	—	ns
Stop condition setup time	$t_{SU.STO}$	600	—	—	ns
Data input hold time	$t_{HD.DAT}$	0	—	—	ns
Data input setup time	$t_{SU.DAT}$	100	—	—	ns
SCL clock time “L”	t_{LOW}	1300	—	—	ns
SCL clock time “H”	t_{HIGH}	600	—	—	ns
SCL, SDA falling time	t_F	—	—	300	ns
SCL, SDA rising time	t_R	—	—	300*1	ns
		—	—	1000*2	ns
SDA output delay time	t_{AA}	100	—	900	ns
SDA output hold time	t_{DH}	50	—	—	ns
Address input hold time	t_{HDAD}	0	—	—	ns
Address input setup time	t_{SUAD}	0	—	—	ns
Noise suppression time	t_I	—	—	50	ns

***1.** $f_{SCL} > 100$ kHz
***2.** $f_{SCL} \leq 100$ kHz

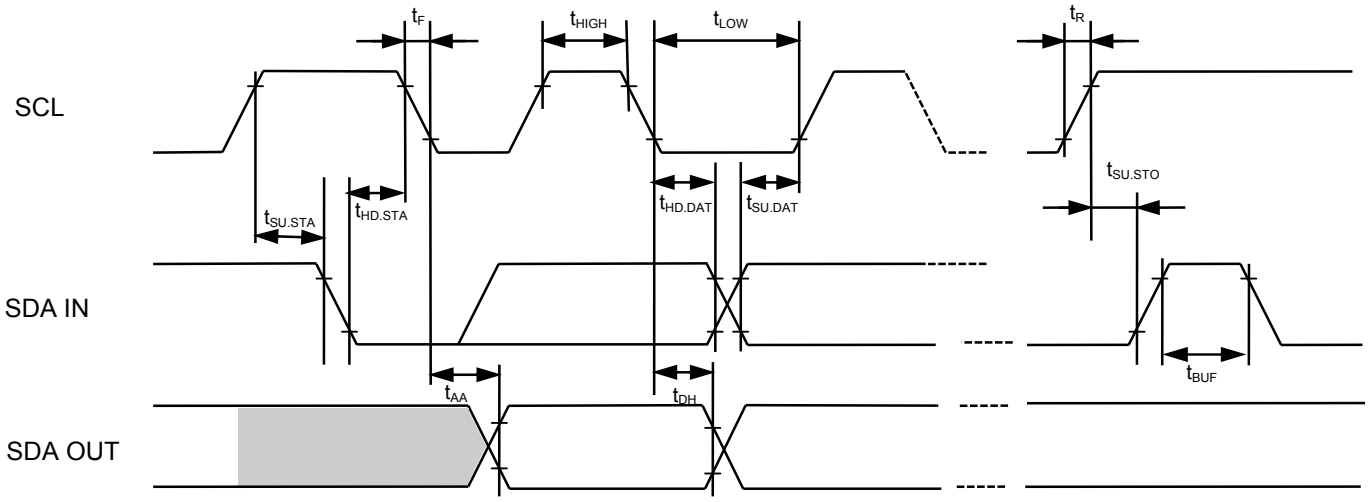

Figure 9

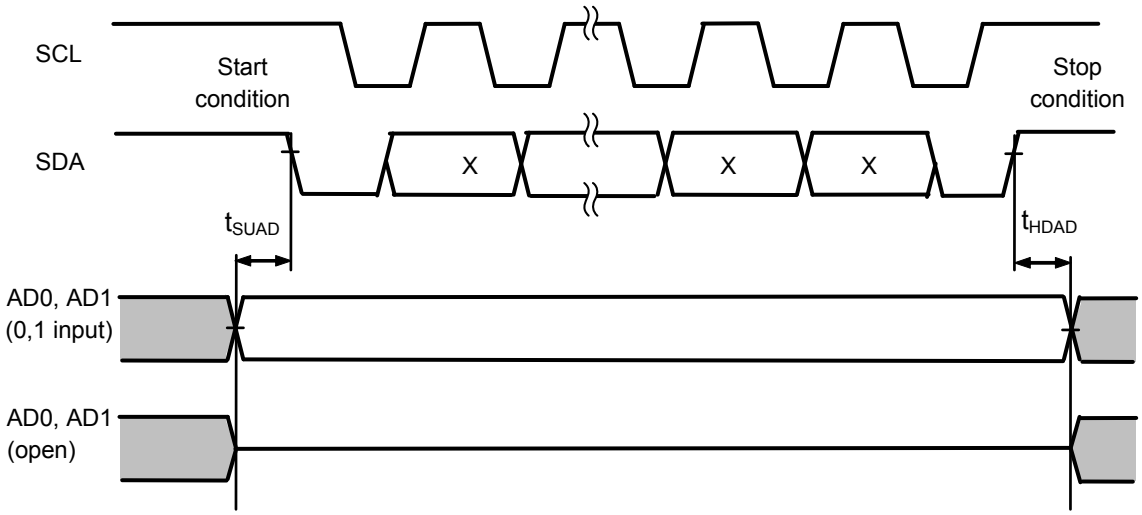

Figure 10

■ Registers

1. Configuration of register

The S-5851A Series has a temperature register for reading temperature data, a configuration register to set operations of the S-5851A Series and a pointer register that sets which register will operate Read/Write.

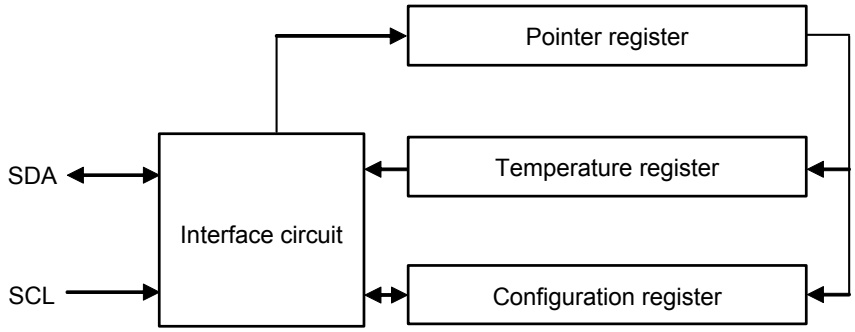

Figure 11 Configuration of Register

2. Pointer register

The pointer register is an 8-bit register that sets which register will operate Read/Write. Write 00h in the pointer register enables to Read the temperature register. Write 01h enables to Read/Write the configuration register. The value is 00h after power-up/reset of the pointer register.

Users are not able to read the point register directly. When you are uncertain of the value in the pointer register, designate the pointer register again.

0	0	0	0	0	0	0	P0

MSB LSB

Figure 12 Configuration of Pointer Register

3. Temperature register

The temperature register is a 12-bit Read-only register and stores the latest temperature data. To gain all data, Read 2 bytes. Its first 12 bits are temperature data and 0 is output in other bits. The temperature register outputs 0°C until the first conversion has finished after power-up or reset.

First byte	T11	T10	T9	T8	T7	T6	T5	T4
Second byte	T3	T2	T1	T0	0	0	0	0
	MSB							LSB

Figure 13 Configuration of Temperature Register

The 12 bits T11 to T0 show temperature. The highest bit of temperature data (T11) shows positive/negative in temperature. Its resolution is 0.0625°C. **Table 10** shows the typical temperature and temperature data.
It is unnecessary to receive all data in the temperature register. Users are able to finish transmission by inputting a stop condition without sending an acknowledgment signal back from the master device, after Read the first byte in the temperature register.

Table 10 Temperature Data

Temperature (°C)	Temperature data	
	Binary system (T11 – T0)	Hexadecimal
125	0111 1101 0000	7D0
100	0110 0100 0000	640
80	0101 0000 0000	500
75	0100 1011 0000	4B0
50	0011 0010 0000	320
25	0001 1001 0000	190
0.25	0000 0000 0100	004
0	0000 0000 0000	000
–0.25	1111 1111 1100	FFC
–25	1110 0111 0000	E70
–40	1101 1000 0000	D80

4. Configuration register

The configuration register is an 8-bit Read/Write register, and stores bit which controls operations of the S-5851A Series. The Read/Write operation can be performed from MSB. All bits are 0 after power-up/reset of this configuration register. In case of rewriting bit data except SD, OS bits, the bit data will be omitted.

OS	0	0	0	0	0	0	SD

MSB LSB

Figure 14 Configuration Register

4. 1 Shutdown mode (SD)

Write 1 in the shutdown mode bit (SD) in the configuration register stops the circuits except the serial interface, thus enables to reduce power consumption. By this mode, current comsumption will decrease to 1 μA (typ.) or less. This mode is valid after the current conversion.

By Write 0 in the shutdown mode bit (SD), the S-5851A Series returns to the normal status in which the S-5851A Series continues updating temperature data. Users can always read the latest temperature data.

4. 2 One-shot mode (OS)

The S-5851A Series features the one-shot temperature measure mode. In the shutdown mode, By Write 1 in the one-shot mode bit (OS) in the configuration register, the S-5851A Series starts converting temperature that is done only once. The S-5851A Series finishes updating data in the temperature register after this single temperature conversion, the S-5851A Series returns to the shutdown mode again. When continuous temperature monitoring is unnecessary, this mode reduces consumption power.

Write 1 in the one-shot mode bit (OS) in the normal status, the one-shot mode bit (OS) keeps 1 until the current temperature data has finished updating. After this updating, the one-shot mode bit (OS) is set to 0 to indicate the upload completion.

■ Operation

The S-5851A Series is a digital temperature sensor with 2-wire serial interface. By transmission using the SCL and SDA pins, users are able to Read temperature data and set the various modes for the S-5851A Series. Connect a bypass capacitor of 0.1 μF between the VDD and VSS pins for proper temperature data.

1. Start condition

A start condition starts by changing the SDA line from “H” to “L” while the SCL line is “H”.
All operations start with a start condition.

2. Stop condition

A stop condition starts by changing the SDA line from “L” to “H” while the SCL line is “H”.
During Read sequence if the S-5851A Series receives a stop condition, its Read operation is interrupted.
During Write sequence if the S-5851A Series receives a stop condition, the S-5851A Series finishes installing Write data.

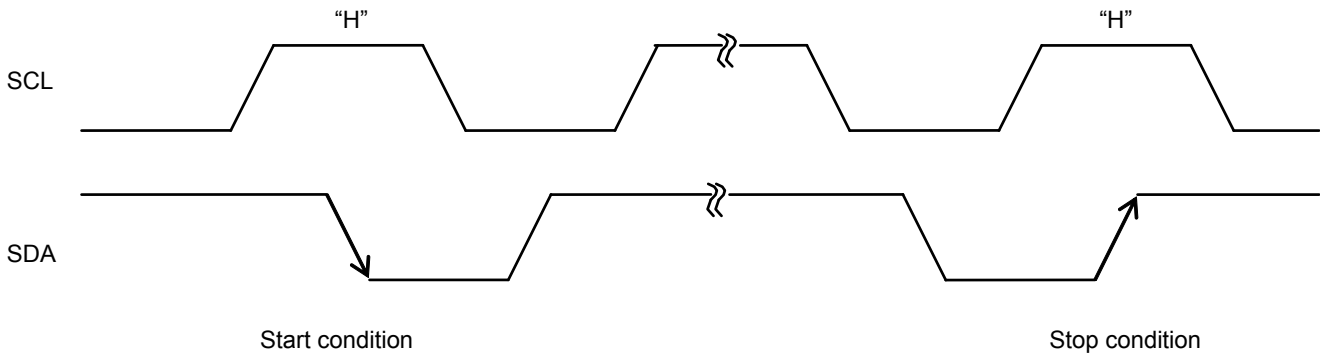

Figure 15 Start/Stop Conditions

3. Data transmission

Data is transmitted by changing the SDA line while the SCL line is “L”.

If the SDA line changes while the SCL line is “H”, the S-5851A Series goes in the start or stop condition status.

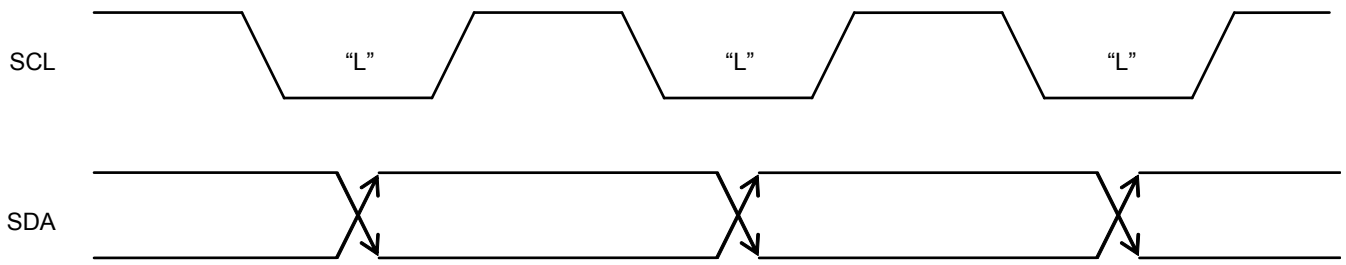

Figure 16 Data Transmission Timing

4. Acknowledgment

Data is transmitted sequentially in 8-bit. Changing the SDA line to “L” indicates that the devices on the system bus have received data, thus the devices send an acknowledgment signal back during the 9th clock of cycle.

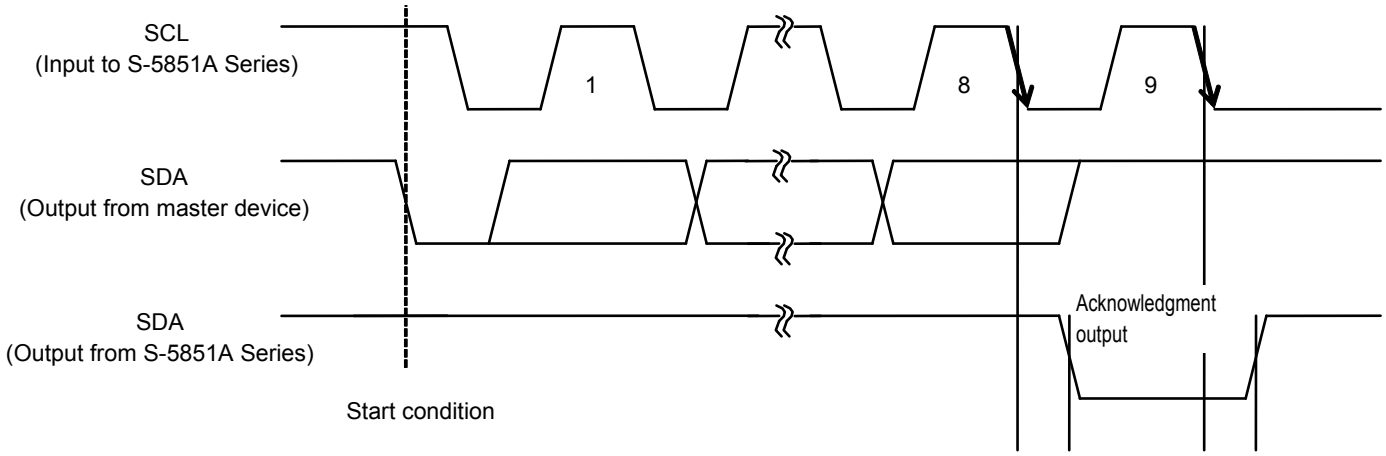

Figure 17 Acknowledgment Output Timing

5. Device addressing

To start the transmission, the master device on the system generates a start condition for the slave address. After that, the master device transmits the 7-bit slave address and the 1-bit Read/Write instruction code to the SDA bus.
The higher 4 bits of the slave address are device code, and are fixed to “1001”.

The next 3 bits (A2, A1, A0) are used to select the devices on the system bus, and they are compared with the slave address which is set beforehand by the address input pins (AD1, AD0). If the comparison result matches, the S-5851A Series sends an acknowledgment signal back at the 9th clock of cycle. **Table 11** shows the settings for the address input pins (AD1, AD0) and the slave address.

The the S-5851A Series does not send an acknowledgment signal back unless the slave address matches.

Table 11 Settings for Address Input Pin and Slave Address

Settings for address input pin		Slave address			
AD1 pin	AD0 pin	Device code	A2	A1	A0
0	0	1001	0	0	0
0	Open		0	0	1
0	1		0	1	0
1	0		1	0	0
1	Open		1	0	1
1	1		1	1	0
Open	0		0	1	1
Open	1		1	1	1

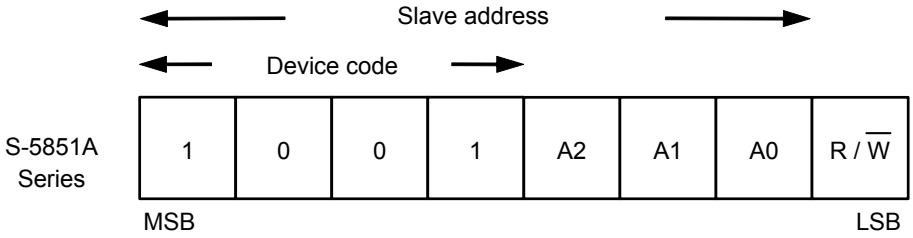

Figure 18 Slave Address

6. Configuration register's Write operation

When the S-5851A Series receives the 7-bit slave address and the Read/Write instruction code "0" after receiving a start condition, it generates an acknowledgment signal.

Next, it receives the 8-bit pointer register's data, and generates an acknowledgment signal. After receiving 8-bit Write data, it rewrites data in the configuration register designated by user, and generates an acknowledgment signal. It receives a stop condition so that the Write operation is finished.

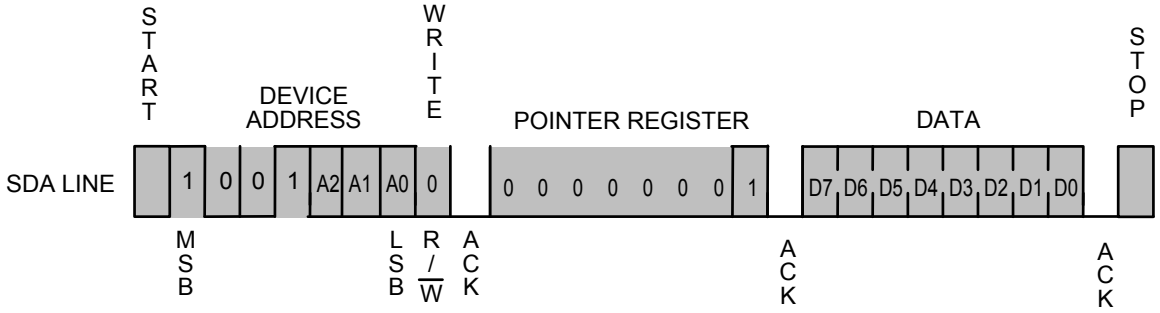

Figure 19 Write Operation

7. Read operation

7. 1 Read by register-designation

To read data in the register set by user arbitrarily, use this function Read by register designation.

Beforehand, do dummy write as follows to set the pointer register.

When the S-5851A Series receives 7-bit slave address and the Read/Write instruction code "0" after receiving a start condition, it generates an acknowledgment signal.

Next, the S-5851A Series receives 8-bit pointer register's data and generates an acknowledgment signal. By these operations, users can set the pointer register.

And the S-5851A Series receives 7-bit slave address and the Read/Write instruction code "1" after receiving a start condition, it generates an acknowledgment signal.

8-bit data in the register designated by user will be output synchronizing with the SCL clock from the S-5851A Series.

After these operations, the master device sends a stop condition not outputting an acknowledgment signal so that the Read operation is finished.

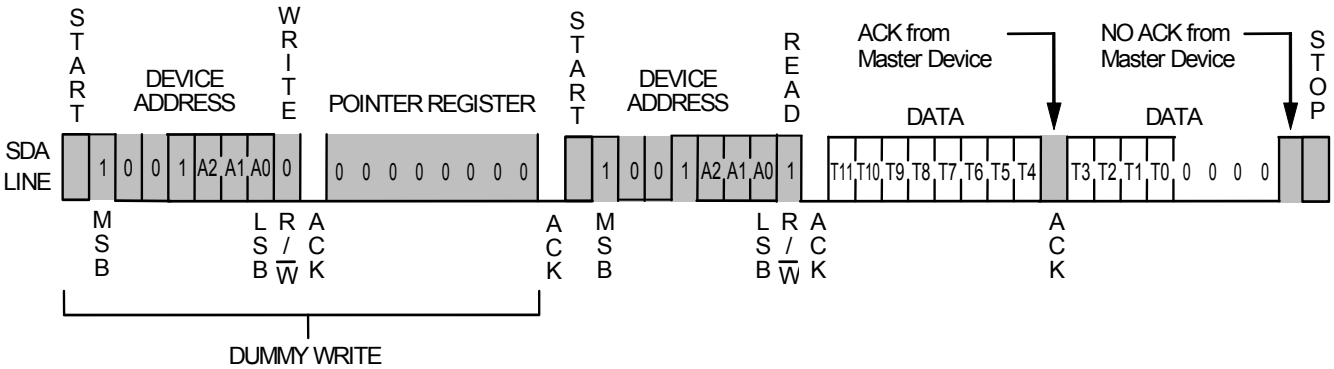

Figure 20 When Reading Temperature Register

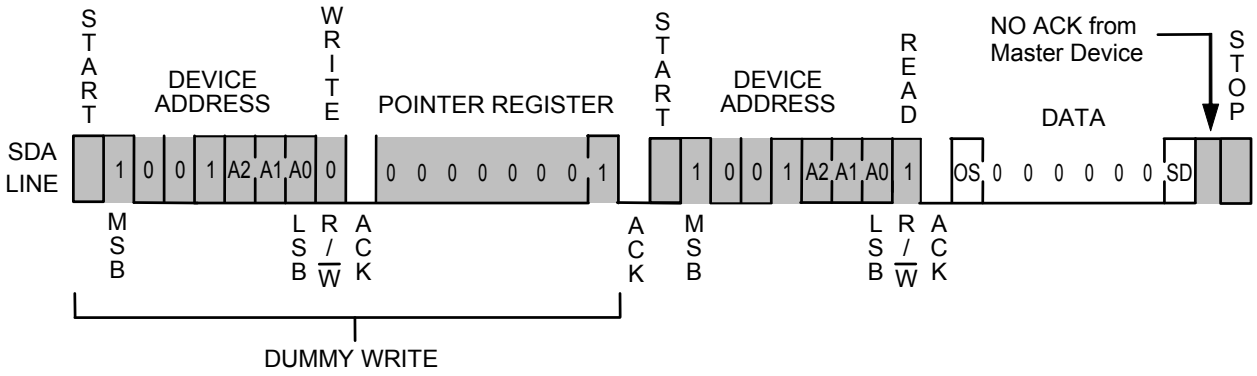

Figure 21 When Reading Configuration Register

7. 2 Current Register Read

The S-5851A Series maintains values of the pointer register's data that is accessed by the S-5851A Series most recently in both Read and Write. As long as the master device recognizes values of the pointer's data, users can read current data in the pointer register without designation. This is current register read.

In case that the S-5851A Series's pointer register is indicating the temperature register, the S-5851A Series receives 7-bit slave address and the Read/Write instruction code "1" after receiving a start condition, it generates an acknowledgment signal.

Next, the first byte data in the temperature register will be output from the S-5851A Series synchronizing with the SCL clock. After that, the master device outputs an acknowledgment signal, the S-5851A Series outputs 4 bits from MSB of the second byte in the temperature register, and 4 bits from LSB are zero.

After these operations, the master device sends a stop condition so that the Read operation is finished.

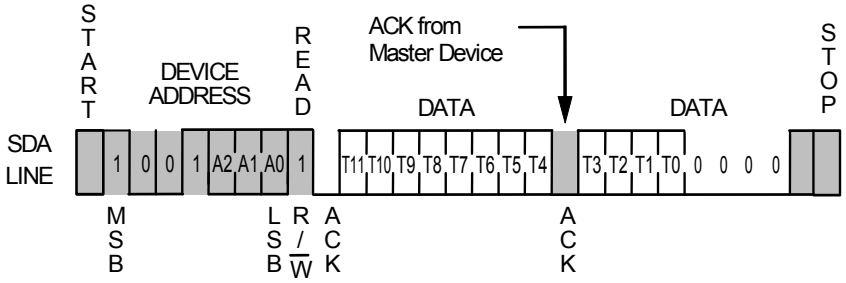

Figure 22 Current Register Read

8. General call

After 2-wire interface general call (0000000), the S-5851A Series sends back an acknowledgment signal when the 8th bit is set to 0. And when the second byte is 00000100, the S-5851A Series reinstalls the status of the AD0 and AD1 pins and sends back an acknowledgment signal without resetting the inside status. But when the second byte is 00000110, the S-5851A Series resets its inside all, and goes back itself to the status immediately after power-up.

■ Operation during the Low Power Supply Voltage

The S-5851A Series has a low power supply voltage detection circuit, stops the interface circuit when the power supply voltage drops to the level of the detection voltage or less. The detection voltage is 1.9 V typ., the release voltage is 2.0 V typ.

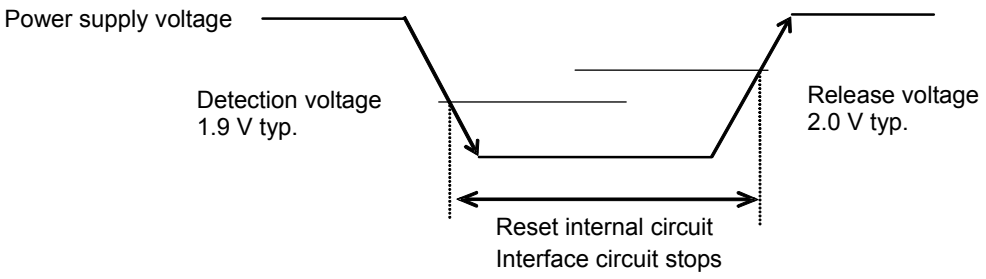

Figure 23 Operation during the Low Power Supply Voltage

■ How to Reset S-5851A Series

Which status the S-5851A Series is in, users can reset the S-5851A Series externally by following two ways.

- Set the power supply voltage at 0 V once in order to get it back to the range of operating voltage again. Have a period at least 10 ms or more to set the power supply voltage at 0 V.
- Release the bus, after that, do the reset instruction for general call.
  First, input a start condition and send the 9 clocks (dummy clock) to the SCL line. During this, set the master device to input "H" to the SDA line. By this operation the S-5851A Series stops outputting an acknowledgment signal or outputting data, then input a start condition and a stop condition.
  After that, send a general call (0000000) and send 0 as the 8th bit. And send 00000110 as the second byte. Consequently, the S-5851A Series resets its inside status.

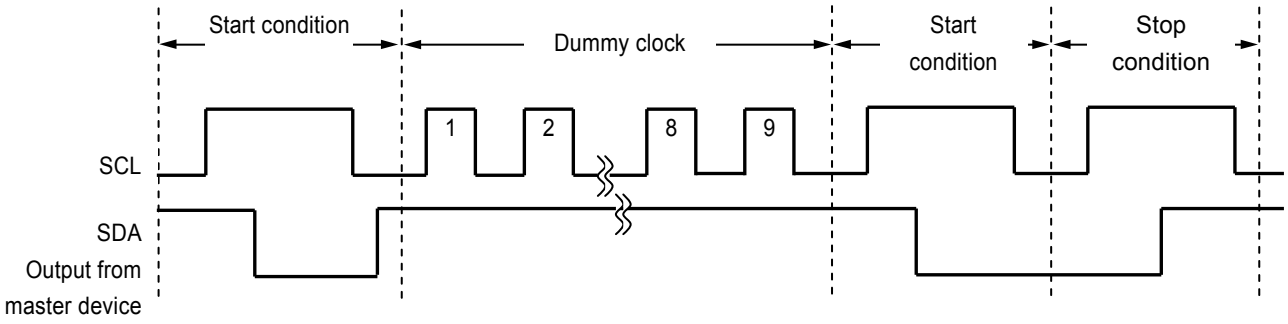

Figure 24 How to Release Bus

■ Precaution

- Set a bypass capacitor of approx. 0.1 μF between VDD and VSS pins, nearest to the IC for stabilization.
- The application conditions for the input voltage, output voltage, and load current should not exceed the package power dissipation.
- Do not apply an electrostatic discharge to this IC that exceeds the performance ratings of the built-in electrostatic protection circuit.
- ABLIC Inc. claims no responsibility for any disputes arising out of or in connection with any infringement by products, including this IC, of patents owned by a third party.

■ Characteristics (Typical Data)

1. Current consumption at operation (I_{DD1}) — Temperature

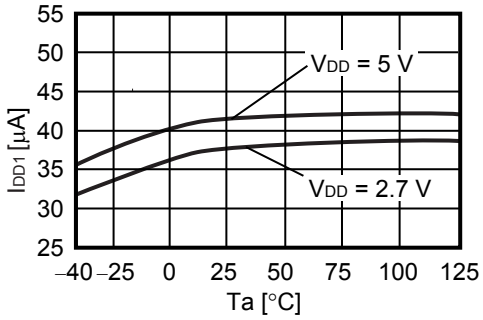

2. Current consumption at shutdown (I_{DD3}) — Temperature

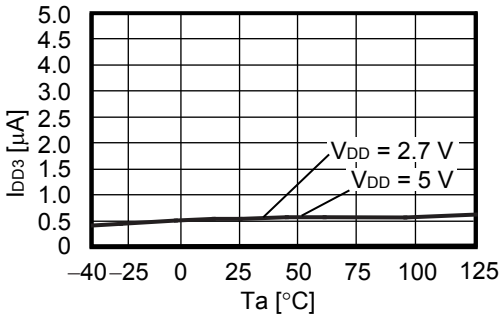

3. Temperature accuracy (T_{AAC}) — Temperature

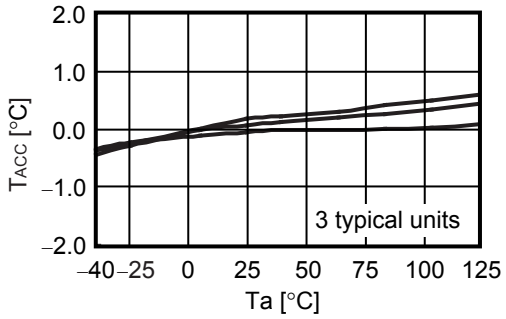

4. Temperature update time (t_{CNV}) — Temperature

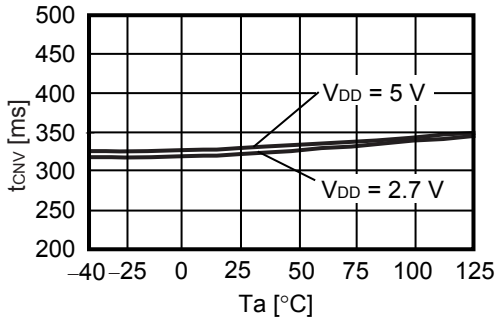

5. Current consumption at serial bus active (I_{DD2}) — Clock frequency

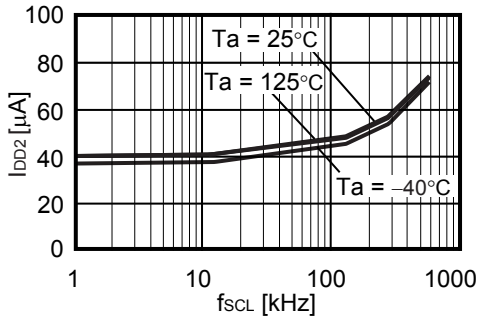

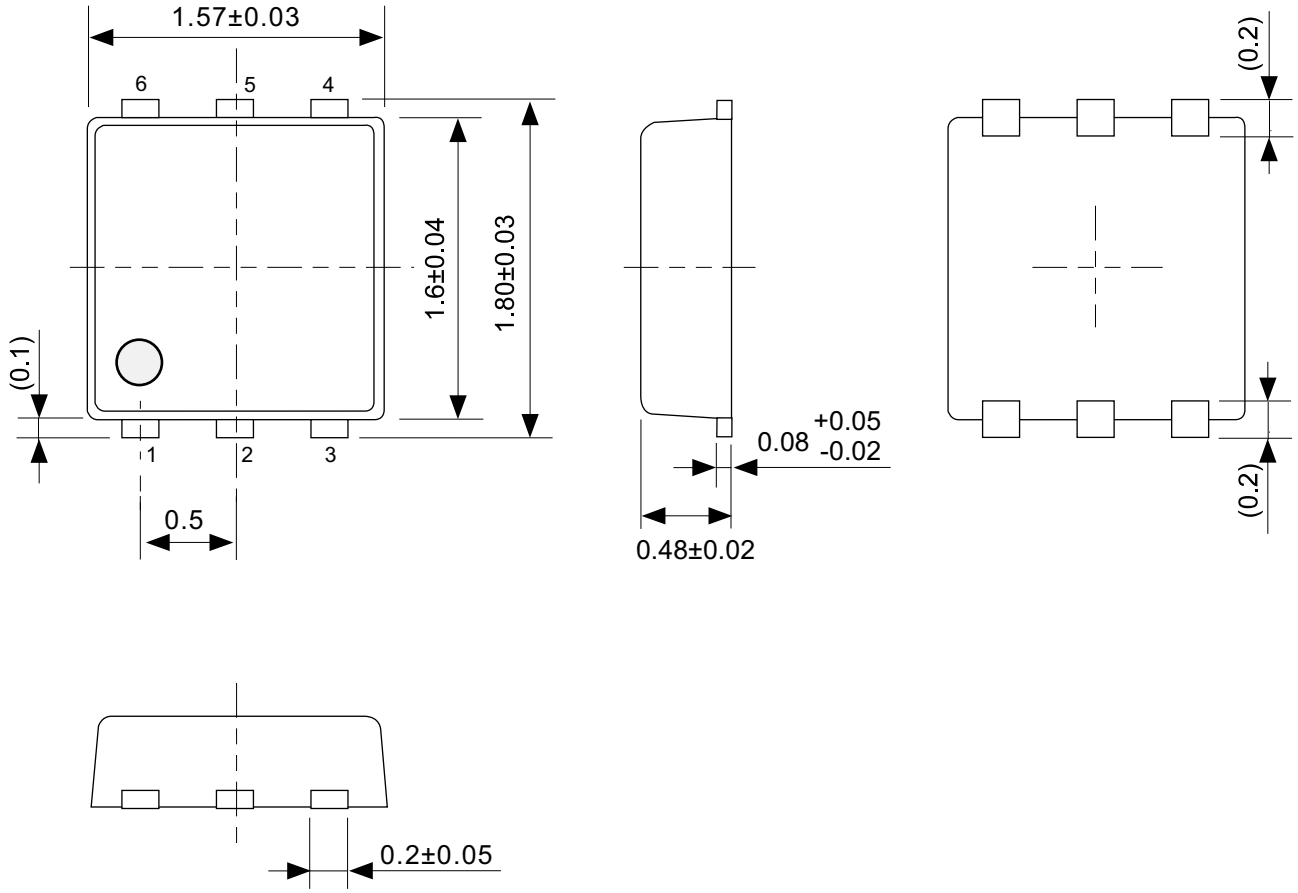

No. PG006-A-P-SD-2.1

TITLE	SNT-6A-A-PKG Dimensions
No.	PG006-A-P-SD-2.1
ANGLE	
UNIT	mm

ABLIC Inc.

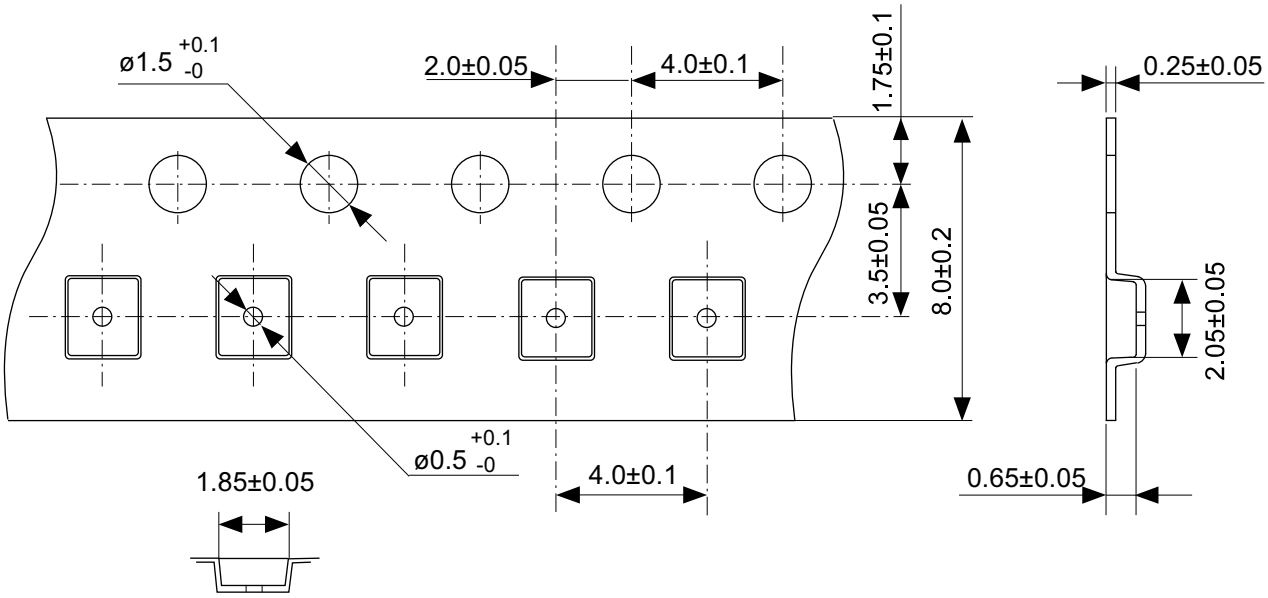

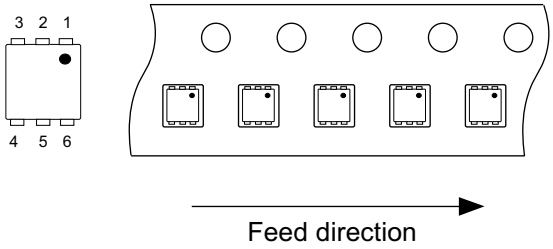

No. PG006-A-C-SD-2.0

TITLE	SNT-6A-A-Carrier Tape
No.	PG006-A-C-SD-2.0
ANGLE	
UNIT	mm

ABLIC Inc.

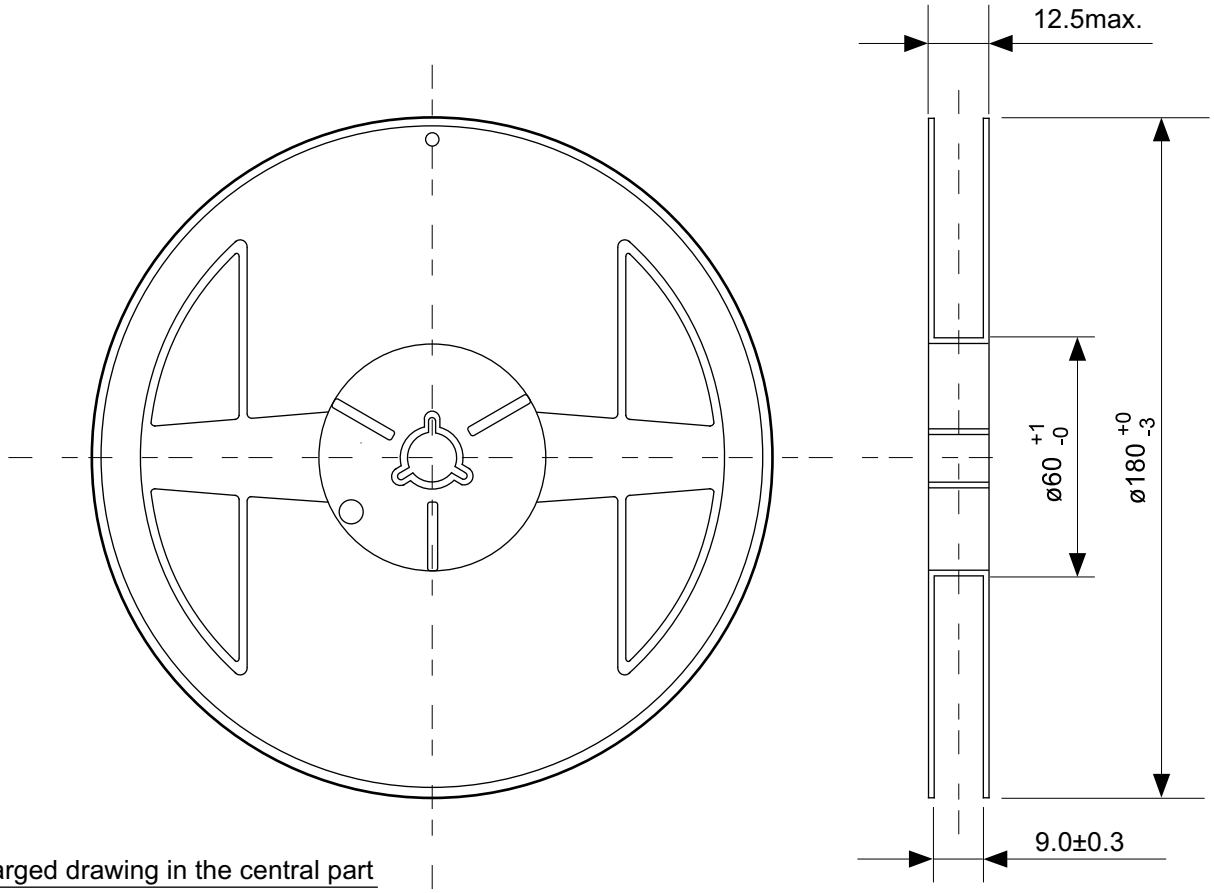

Enlarged drawing in the central part

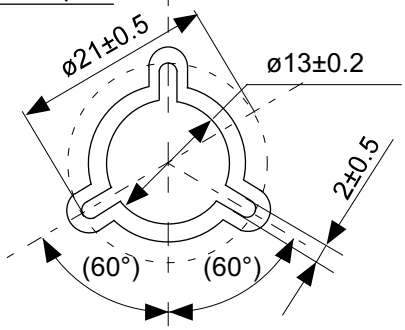

No. PG006-A-R-SD-1.0

TITLE	SNT-6A-A-Reel		
No.	PG006-A-R-SD-1.0		
ANGLE		QTY.	5,000
UNIT	mm		
ABLIC Inc.			

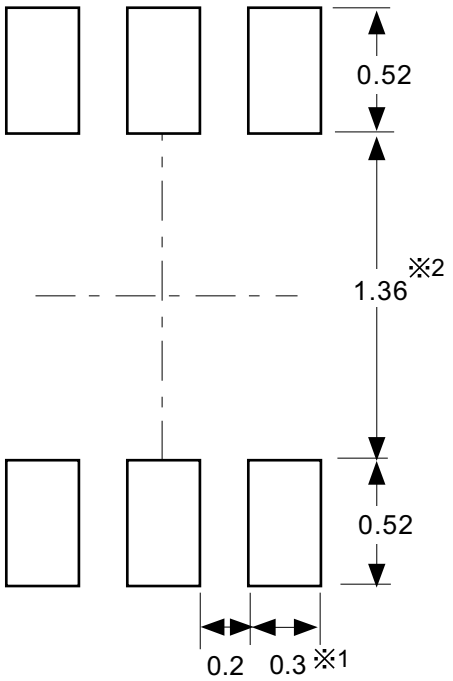

※1. ランドパターンの幅に注意してください (0.25 mm min. / 0.30 mm typ.)。
※2. パッケージ中央にランドパターンを広げないでください (1.30 mm ~ 1.40 mm)。

注意 1. パッケージのモールド樹脂下にシルク印刷やハンダ印刷などしないでください。
2. パッケージ下の配線上のソルダーレジストなどの厚みをランドパターン表面から0.03 mm 以下にしてください。
3. マスク開口サイズと開口位置はランドパターンと合わせてください。
4. 詳細は〝SNTパッケージ活用の手引き〟を参照してください。

※1. Pay attention to the land pattern width (0.25 mm min. / 0.30 mm typ.).
※2. Do not widen the land pattern to the center of the package (1.30 mm ~ 1.40 mm).

Caution 1. Do not do silkscreen printing and solder printing under the mold resin of the package.
2. The thickness of the solder resist on the wire pattern under the package should be 0.03 mm or less from the land pattern surface.
3. Match the mask aperture size and aperture position with the land pattern.
4. Refer to "SNT Package User's Guide" for details.

※1. 请注意焊盘模式的宽度 (0.25 mm min. / 0.30 mm typ.)。
※2. 请勿向封装中间扩展焊盘模式 (1.30 mm ~ 1.40 mm)。

注意 1. 请勿在树脂型封装的下面印刷丝网、焊锡。
2. 在封装下、布线上的阻焊膜厚度 (从焊盘模式表面起) 请控制在 0.03 mm 以下。
3. 钢网的开口尺寸和开口位置请与焊盘模式对齐。
4. 详细内容请参阅 "SNT 封装的应用指南"。

No. PG006-A-L-SD-4.1

TITLE	SNT-6A-A -Land Recommendation
No.	PG006-A-L-SD-4.1
ANGLE	
UNIT	mm
ABLIC Inc.	

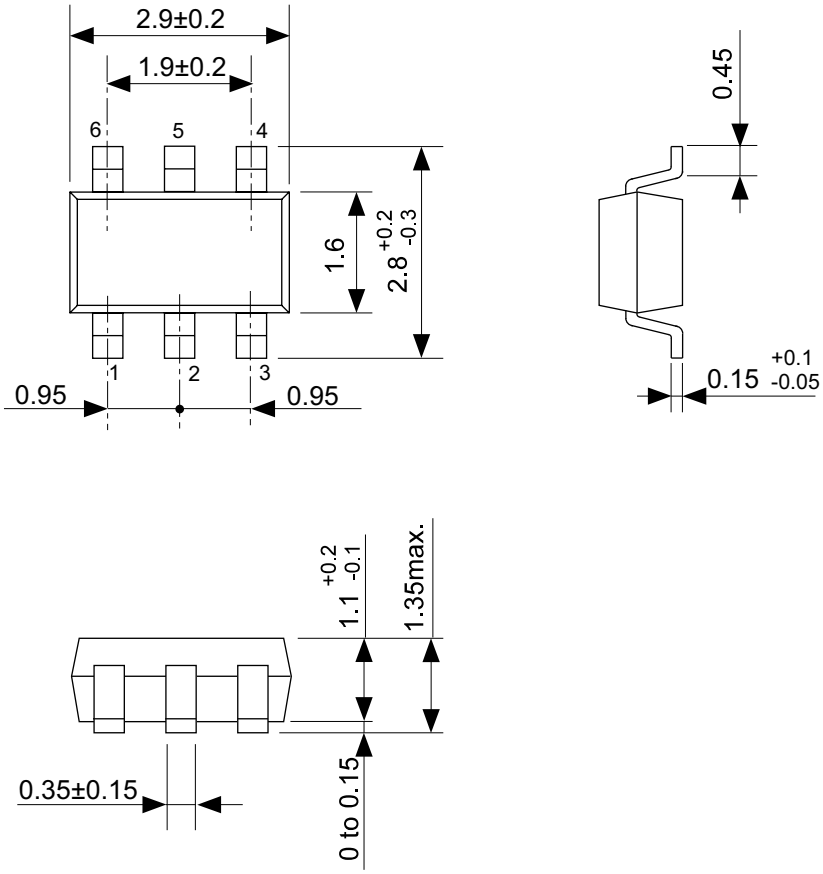

No. MP006-A-P-SD-2.1

TITLE	SOT236-A-PKG Dimensions
No.	MP006-A-P-SD-2.1
ANGLE	
UNIT	mm

ABLIC Inc.

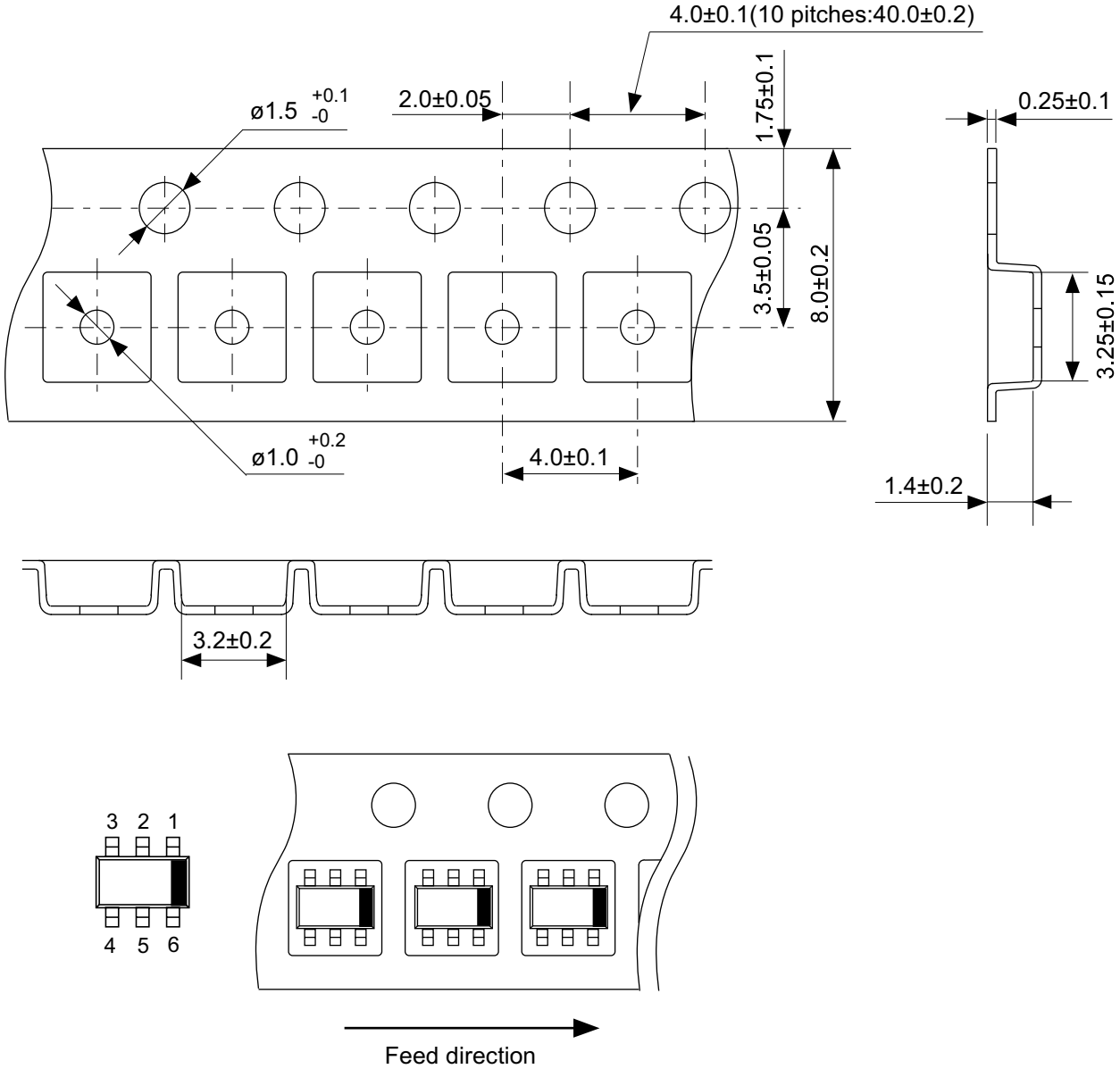

No. MP006-A-C-SD-3.1

TITLE	SOT236-A-Carrier Tape
No.	MP006-A-C-SD-3.1
ANGLE	
UNIT	mm

ABLIC Inc.

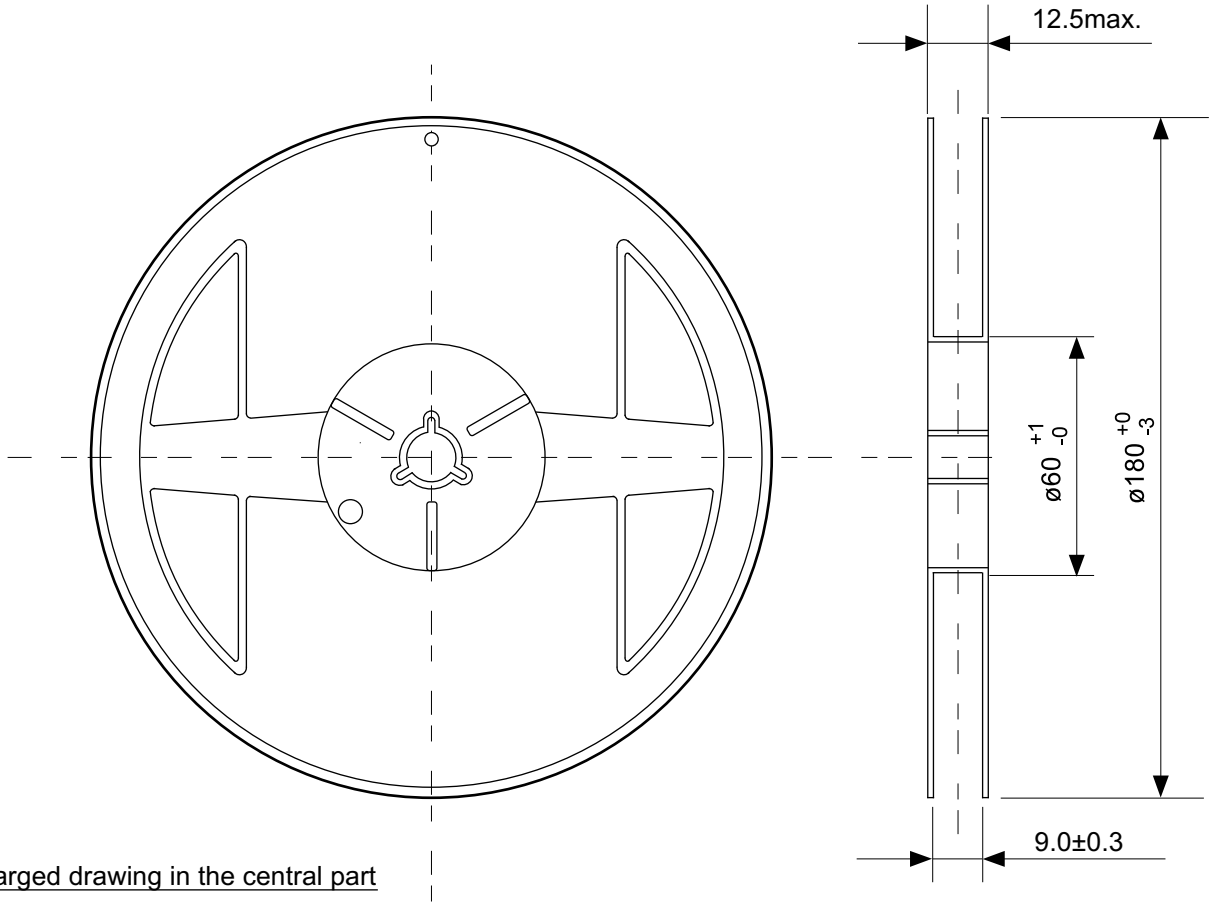

Enlarged drawing in the central part

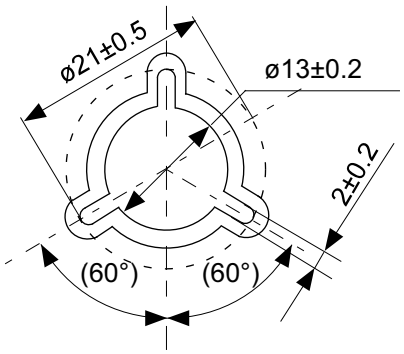

No. MP006-A-R-SD-2.1

TITLE	SOT236-A-Reel		
No.	MP006-A-R-SD-2.1		
ANGLE		QTY	3,000
UNIT	mm		
ABLIC Inc.			

Disclaimers (Handling Precautions)

1. All the information described herein (product data, specifications, figures, tables, programs, algorithms and application circuit examples, etc.) is current as of publishing date of this document and is subject to change without notice.
2. The circuit examples and the usages described herein are for reference only, and do not guarantee the success of any specific mass-production design.
   ABLIC Inc. is not liable for any losses, damages, claims or demands caused by the reasons other than the products described herein (hereinafter "the products") or infringement of third-party intellectual property right and any other right due to the use of the information described herein.
3. ABLIC Inc. is not liable for any losses, damages, claims or demands caused by the incorrect information described herein.
4. Be careful to use the products within their ranges described herein. Pay special attention for use to the absolute maximum ratings, operation voltage range and electrical characteristics, etc.
   ABLIC Inc. is not liable for any losses, damages, claims or demands caused by failures and / or accidents, etc. due to the use of the products outside their specified ranges.
5. Before using the products, confirm their applications, and the laws and regulations of the region or country where they are used and verify suitability, safety and other factors for the intended use.
6. When exporting the products, comply with the Foreign Exchange and Foreign Trade Act and all other export-related laws, and follow the required procedures.
7. The products are strictly prohibited from using, providing or exporting for the purposes of the development of weapons of mass destruction or military use. ABLIC Inc. is not liable for any losses, damages, claims or demands caused by any provision or export to the person or entity who intends to develop, manufacture, use or store nuclear, biological or chemical weapons or missiles, or use any other military purposes.
8. The products are not designed to be used as part of any device or equipment that may affect the human body, human life, or assets (such as medical equipment, disaster prevention systems, security systems, combustion control systems, infrastructure control systems, vehicle equipment, traffic systems, in-vehicle equipment, aviation equipment, aerospace equipment, and nuclear-related equipment), excluding when specified for in-vehicle use or other uses by ABLIC, Inc. Do not apply the products to the above listed devices and equipments.
   ABLIC Inc. is not liable for any losses, damages, claims or demands caused by unauthorized or unspecified use of the products.
9. In general, semiconductor products may fail or malfunction with some probability. The user of the products should therefore take responsibility to give thorough consideration to safety design including redundancy, fire spread prevention measures, and malfunction prevention to prevent accidents causing injury or death, fires and social damage, etc. that may ensue from the products' failure or malfunction.
   The entire system in which the products are used must be sufficiently evaluated and judged whether the products are allowed to apply for the system on customer's own responsibility.
10. The products are not designed to be radiation-proof. The necessary radiation measures should be taken in the product design by the customer depending on the intended use.
11. The products do not affect human health under normal use. However, they contain chemical substances and heavy metals and should therefore not be put in the mouth. The fracture surfaces of wafers and chips may be sharp. Be careful when handling these with the bare hands to prevent injuries, etc.
12. When disposing of the products, comply with the laws and ordinances of the country or region where they are used.
13. The information described herein contains copyright information and know-how of ABLIC Inc. The information described herein does not convey any license under any intellectual property rights or any other rights belonging to ABLIC Inc. or a third party. Reproduction or copying of the information from this document or any part of this document described herein for the purpose of disclosing it to a third-party is strictly prohibited without the express permission of ABLIC Inc.
14. For more details on the information described herein or any other questions, please contact ABLIC Inc.'s sales representative.
15. This Disclaimers have been delivered in a text using the Japanese language, which text, despite any translations into the English language and the Chinese language, shall be controlling.

2.4-2019.07

Mouser Electronics

Authorized Distributor

Click to View Pricing, Inventory, Delivery & Lifecycle Information:

ABLIC:

S-5851AAA-M6T1U S-5851AAA-I6T1U

OCEAN CHIPS
Океан Электроники
Поставка электронных компонентов

Компания «Океан Электроники» предлагает заключение долгосрочных отношений при поставках импортных электронных компонентов на взаимовыгодных условиях!

Наши преимущества:

- Поставка оригинальных импортных электронных компонентов напрямую с производств Америки, Европы и Азии, а так же с крупнейших складов мира;
- Широкая линейка поставок активных и пассивных импортных электронных компонентов (более 30 млн. наименований);
- Поставка сложных, дефицитных, либо снятых с производства позиций;
- Оперативные сроки поставки под заказ (от 5 рабочих дней);
- Экспресс доставка в любую точку России;
- Помощь Конструкторского Отдела и консультации квалифицированных инженеров;
- Техническая поддержка проекта, помощь в подборе аналогов, поставка прототипов;
- Поставка электронных компонентов под контролем ВП;
- Система менеджмента качества сертифицирована по Международному стандарту ISO 9001;
- При необходимости вся продукция военного и аэрокосмического назначения проходит испытания и сертификацию в лаборатории (по согласованию с заказчиком);
- Поставка специализированных компонентов военного и аэрокосмического уровня качества (Xilinx, Altera, Analog Devices, Intersil, Interpoint, Microsemi, Actel, Aeroflex, Peregrine, VPT, Syfer, Eurofarad, Texas Instruments, MS Kennedy, Miteq, Cobham, E2V, MA-COM, Hittite, Mini-Circuits, General Dynamics и др.);

Компания «Океан Электроники» является официальным дистрибьютором и эксклюзивным представителем в России одного из крупнейших производителей разъемов военного и аэрокосмического назначения **«JONHON»**, а так же официальным дистрибьютором и эксклюзивным представителем в России производителя высокотехнологичных и надежных решений для передачи СВЧ сигналов **«FORSTAR»**.

AVIC JONHON

«JONHON» (основан в 1970 г.)

Разъемы специального, военного и аэрокосмического назначения:

(Применяются в военной, авиационной, аэрокосмической, морской, железнодорожной, горно- и нефтедобывающей отраслях промышленности)

«FORSTAR» (основан в 1998 г.)

ВЧ соединители, коаксиальные кабели, кабельные сборки и микроволновые компоненты:

(Применяются в телекоммуникациях гражданского и специального назначения, в средствах связи, РЛС, а так же военной, авиационной и аэрокосмической отраслях промышленности).

FORSTAR®

Телефон: 8 (812) 309-75-97 (многоканальный)
Факс: 8 (812) 320-03-32
Электронная почта: ocean@oceanchips.ru
Web: http://oceanchips.ru/
Адрес: 198099, г. Санкт-Петербург, ул. Калинина, д. 2, корп. 4, лит. А