dsPIC33FJ16(GP/MC)101/102 AND dsPIC33FJ32(GP/MC)101/102/104

16-Bit Digital Signal Controllers (up to 32-Kbyte Flash and 2-Kbyte SRAM)

Operating Conditions

- 3.0V to 3.6V, -40ºC to +125ºC, DC to 16 MIPS

Core: 16-bit dsPIC33F CPU

- Code-Efficient (C and Assembly) Architecture
- Two 40-Bit Wide Accumulators
- Single-Cycle (MAC/MPY) with Dual Data Fetch
- Single-Cycle Mixed-Sign MUL plus Hardware Divide
- 32-Bit Multiply Support

Clock Management

- ±0.25% Internal Oscillator
- Programmable PLLs and Oscillator Clock Sources
- Fail-Safe Clock Monitor (FSCM)
- Independent Watchdog Timer (WDT)
- Fast Wake-up and Start-up

Power Management

- Low-Power Management modes (Sleep, Idle, Doze)
- Integrated Power-on Reset and Brown-out Reset
- 1 mA/MHz Dynamic Current (typical)
- 30 µA I_{PD} Current (typical)

PWM

- Up to Three PWM Pairs
- Two Dead-Time Generators
- 31.25 ns PWM Resolution
- PWM Support for:
  - Inverters, PFC, UPS
  - BLDC, PMSM, ACIM, SRM
- Class B-Compliant Fault Inputs
- Possibility of ADC Synchronization with PWM Signal

Advanced Analog Features

- ADC module:
  - 10-bit, 1.1 Msps with four S&H
  - Four analog inputs on 18-pin devices and up to 14 analog inputs on 44-pin devices
- Flexible and Independent ADC Trigger Sources
- Three Comparator modules
- Charge Time Measurement Unit (CTMU):
  - Supports mTouch™ capacitive touch sensing
  - Provides high-resolution time measurement (1 ns)
  - On-chip temperature measurement

Timers/Output Compare/Input Capture

- Up to Five General Purpose Timers:
  - One 16-bit and up to two 32-bit timers/counters
- Two Output Compare modules
- Three Input Capture modules
- Peripheral Pin Select (PPS) to allow Function Remap

Communication Interfaces

- UART module (4 Mbps)
  - With support for LIN/J2602 Protocols and IrDA®
- 4-Wire SPI module (8 MHz maximum speed)
  - Remappable Pins in 32-Kbyte Flash Devices
- I^2C™ module (400 kHz)

Input/Output

- Sink/Source 10 mA or 6 mA, Pin-Specific for Standard V_{OH}/V_{OL}, up to 16 mA or 12 mA for Non-Standard $V_{OH}1$
- 5V Tolerant Pins
- Up to 20 Selectable Open-Drain and Pull-ups
- Three External Interrupts (two are remappable)

Qualification and Class B Support

- AEC-Q100 REVG (Grade 1 -40ºC to +125ºC) Planned
- Class B Safety Library, IEC 60730, UDE Certified

Debugger Development Support

- In-Circuit and In-Application Programming
- Up to Three Complex Data Breakpoints
- Trace and Run-Time Watch

© 2011-2012 Microchip Technology Inc.

dsPIC33FJ16(GP/MC)101/102 AND dsPIC33FJ32(GP/MC)101/102/104 PRODUCT FAMILIES

The device names, pin counts, memory sizes, and peripheral availability of each device are listed in Table 1. The following pages show their pinout diagrams.

TABLE 1: dsPIC33FJ16(GP/MC)101/102 DEVICE FEATURES

Device	Pins	Program Flash (Kbyte)	RAM (Kbytes)	Remappable Peripherals							Motor Control PWM	PWM Faults	10-Bit, 1.1 Msps ADC	RTCC	I²C™	Comparators	CTMU	I/O Pins	Packages
				Remappable Pins	16-bit Timer(1,2)	Input Capture	Output Compare	UART	External Interrupts(3)	SPI									
dsPIC33FJ16GP101	18	16	1	8	3	3	2	1	3	1	—	—	1 ADC, 4-ch	Y	1	3	Y	13	PDIP, SOIC
	20	16	1	8	3	3	2	1	3	1	—	—	1 ADC, 4-ch	Y	1	3	Y	15	SSOP
dsPIC33FJ16GP102	28	16	1	16	3	3	2	1	3	1	—	—	1 ADC, 6-ch	Y	1	3	Y	21	SPDIP, SOIC, SSOP, QFN
	36	16	1	16	3	3	2	1	3	1	—	—	1 ADC, 6-ch	Y	1	3	Y	21	VTLA
dsPIC33FJ16MC101	20	16	1	10	3	3	2	1	3	1	6-ch	1	1 ADC, 4-ch	Y	1	3	Y	15	PDIP, SOIC, SSOP
dsPIC33FJ16MC102	28	16	1	16	3	3	2	1	3	1	6-ch	2	1 ADC, 6-ch	Y	1	3	Y	21	SPDIP, SOIC, SSOP, QFN
	36	16	1	16	3	3	2	1	3	1	6-ch	2	1 ADC, 6-ch	Y	1	3	Y	21	VTLA

Note 1: Two out of three timers are remappable.
2: One pair can be combined to create one 32-bit timer.
3: Two out of three interrupts are remappable.

© 2011-2012 Microchip Technology Inc.

TABLE 2: dsPIC33FJ32(GP/MC)101/102/104 DEVICE FEATURES

Device	Pins	Program Flash (Kbyte)	RAM (Kbytes)	Remappable Peripherals							Motor Control PWM	PWM Faults	10-Bit, 1.1 Msps ADC	RTCC	I^2C^{TM}	Comparators	CTMU	I/O Pins	Packages
				Remappable Pins	16-bit Timer(1,2)	Input Capture	Output Compare	UART	External Interrupts(3)	SPI									
dsPIC33FJ32GP101	18	32	2	8	5	3	2	1	3	1	—	—	1 ADC, 6-ch	Y	1	3	Y	13	PDIP, SOIC
	20	32	2	8	5	3	2	1	3	1	—	—	1 ADC, 6-ch	Y	1	3	Y	15	SSOP
dsPIC33FJ32GP102	28	32	2	16	5	3	2	1	3	1	—	—	1 ADC, 8-ch	Y	1	3	Y	21	SPDIP, SOIC, SSOP, QFN
	36	32	2	16	5	3	2	1	3	1	—	—	1 ADC, 8-ch	Y	1	3	Y	21	VTLA
dsPIC33FJ32GP104	44	32	2	26	5	3	2	1	3	1	—	—	1 ADC, 14-ch	Y	1	3	Y	35	TQFP, QFN, VTLA
dsPIC33FJ32MC101	20	32	2	10	5	3	2	1	3	1	6-ch	1	1 ADC, 6-ch	Y	1	3	Y	15	PDIP, SOIC, SSOP
dsPIC33FJ32MC102	28	32	2	16	5	3	2	1	3	1	6-ch	2	1 ADC, 8-ch	Y	1	3	Y	21	SPDIP, SOIC, SSOP, QFN
	36	32	2	16	5	3	2	1	3	1	6-ch	2	1 ADC, 8-ch	Y	1	3	Y	21	VTLA
dsPIC33FJ32MC104	44	32	2	26	5	3	2	1	3	1	6-ch	2	1 ADC, 14-ch	Y	1	3	Y	35	TQFP, QFN, VTLA

Note 1: Four out of five timers are remappable.
2: Two pairs can be combined to have up to two 32-bit timers.
3: Two out of three interrupts are remappable.

Pin Diagrams

18-Pin PDIP/SOIC

■ = Pins are up to 5V tolerant

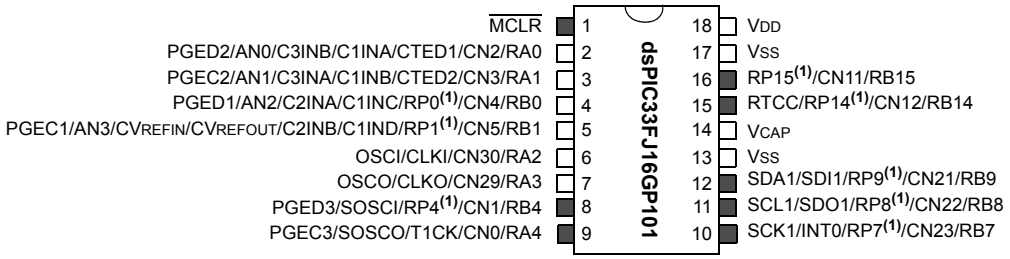

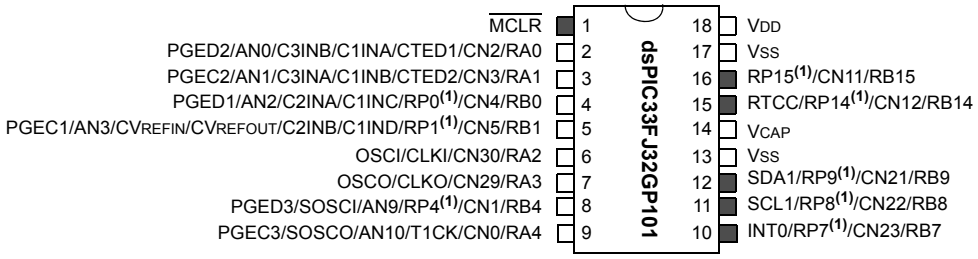

Note 1: The RPn pins can be used by any remappable peripheral. See Table 1 for the list of available peripherals.

© 2011-2012 Microchip Technology Inc.

Pin Diagrams (Continued)

20-Pin SSOP

■ = Pins are up to 5V tolerant

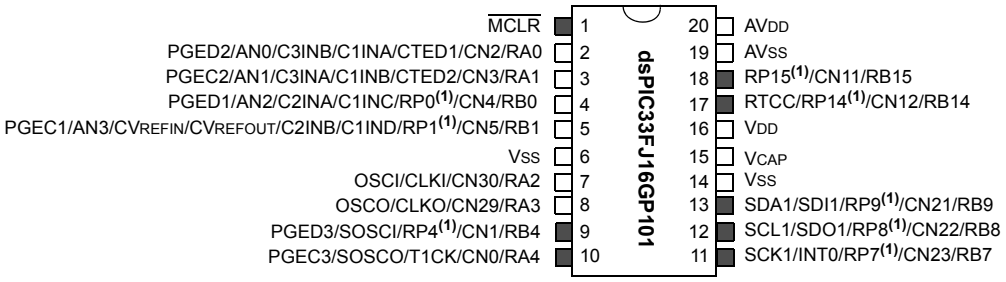

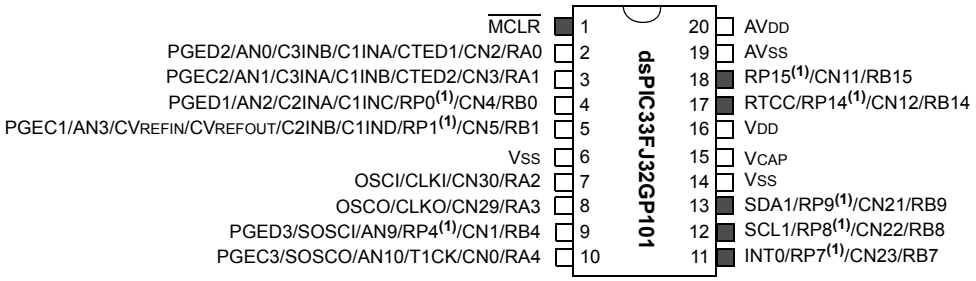

Note 1: The RPn pins can be used by any remappable peripheral. See Table 1 for the list of available peripherals.

Pin Diagrams (Continued)

28-Pin SPDIP/SOIC/SSOP

■ = Pins are up to 5V tolerant

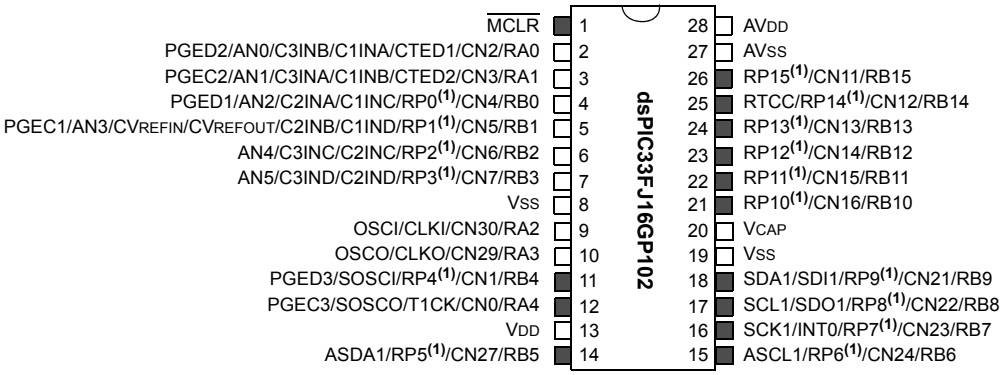

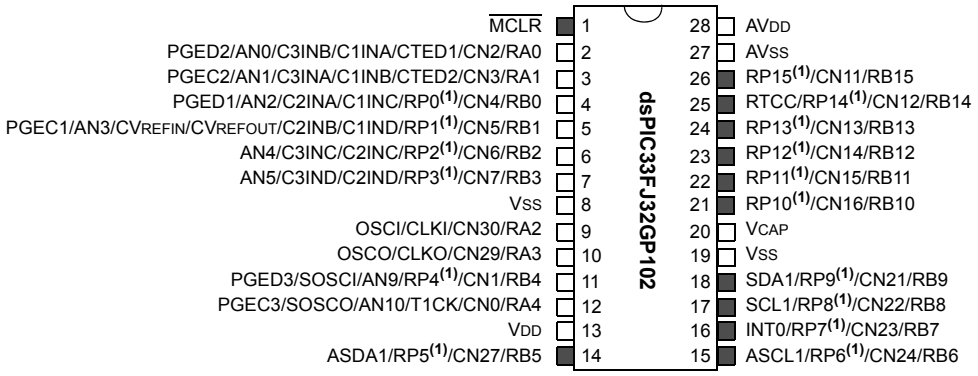

Note 1: The RPn pins can be used by any remappable peripheral. See Table 1 for the list of available peripherals.

© 2011-2012 Microchip Technology Inc.

Pin Diagrams (Continued)

20-Pin PDIP/SOIC/SSOP

■ = Pins are up to 5V tolerant

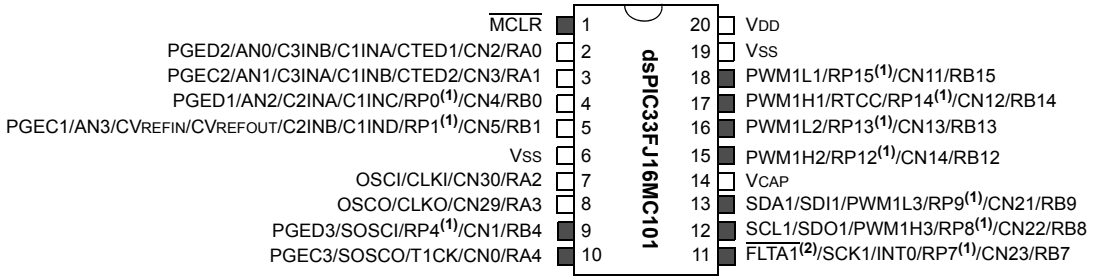

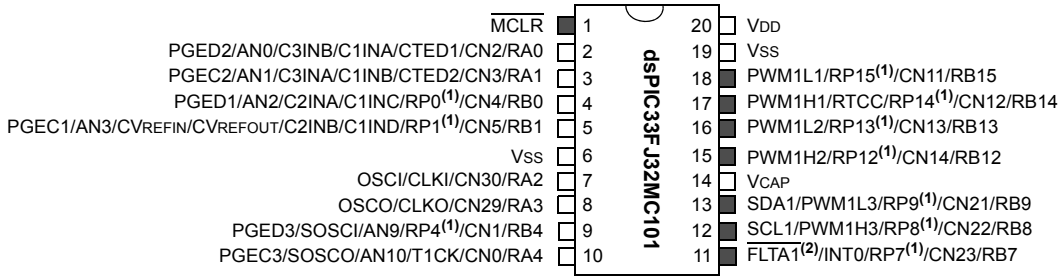

Note 1: The RPn pins can be used by any remappable peripheral. See Table 1 for the list of available peripherals.

2: The PWM Fault pins are enabled and asserted during any Reset event. Refer to **Section 15.2 "PWM Faults"** for more information on the PWM Faults.

Pin Diagrams (Continued)

28-Pin SPDIP/SOIC/SSOP

■ = Pins are up to 5V tolerant

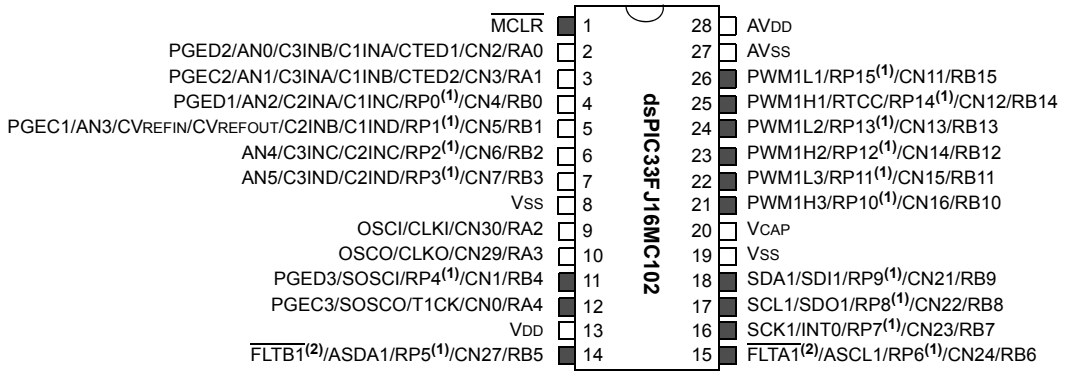

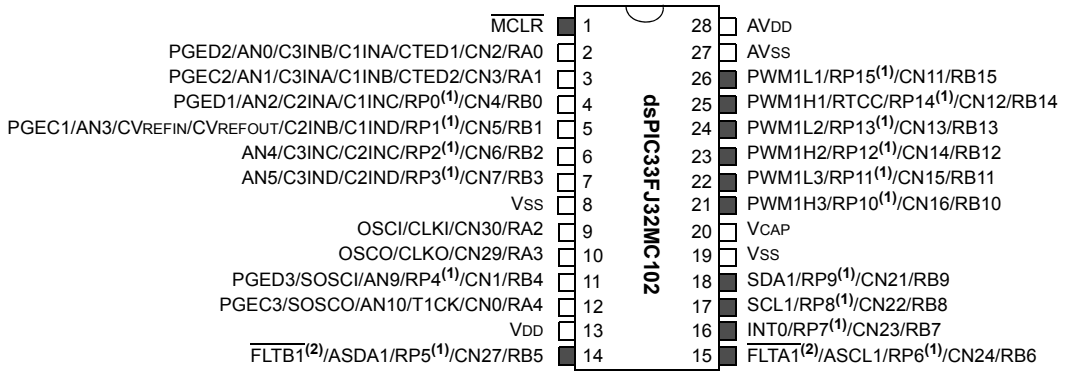

Note 1: The RPn pins can be used by any remappable peripheral. See Table 1 for the list of available peripherals.

2: The PWM Fault pins are enabled and asserted during any Reset event. Refer to **Section 15.2 "PWM Faults"** for more information on the PWM Faults.

© 2011-2012 Microchip Technology Inc.

Pin Diagrams (Continued)

28-Pin QFN(2)

■ = Pins are up to 5V tolerant

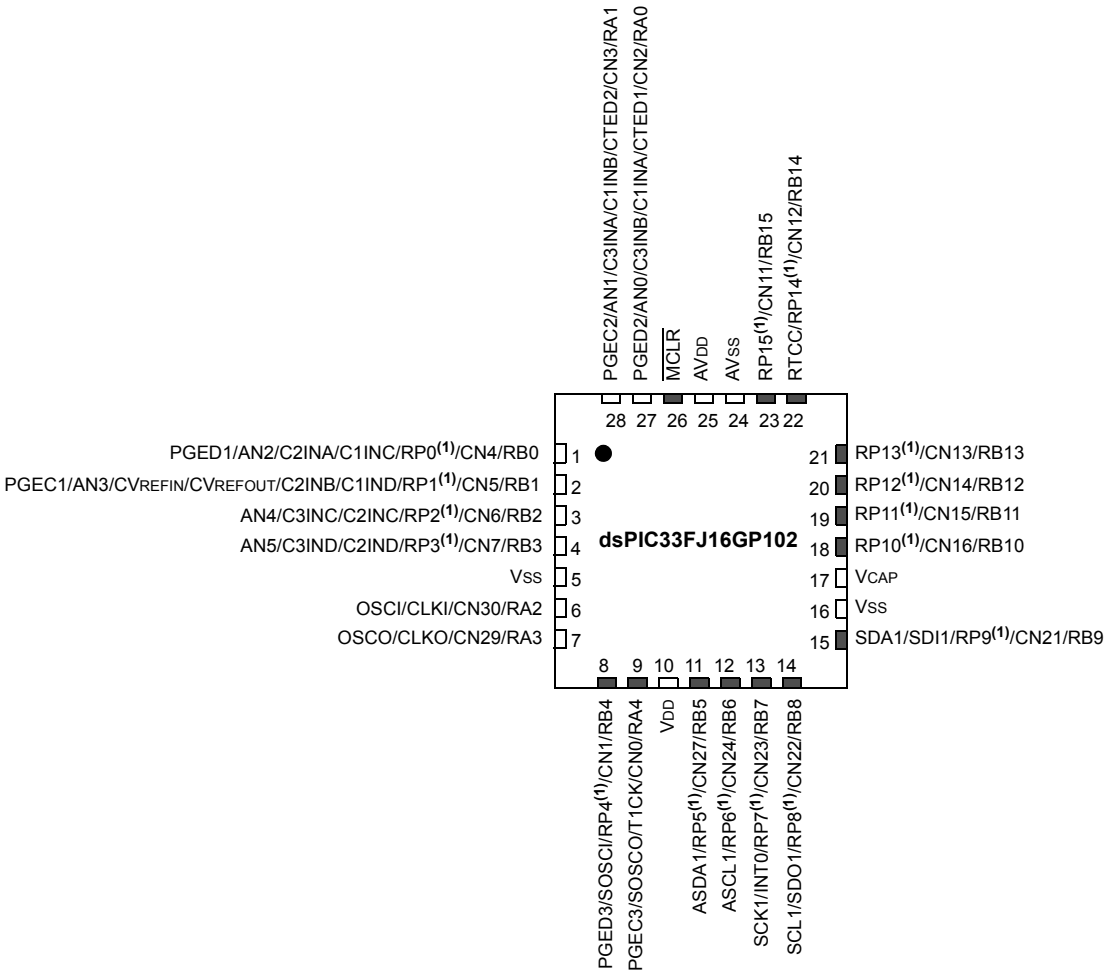

Note 1: The RPn pins can be used by any remappable peripheral. See Table 1 for the list of available peripherals.

2: The metal pad at the bottom of the device is not connected to any pins and is recommended to be connected to VSS externally.

Pin Diagrams (Continued)

28-Pin QFN(2)

■ = Pins are up to 5V tolerant

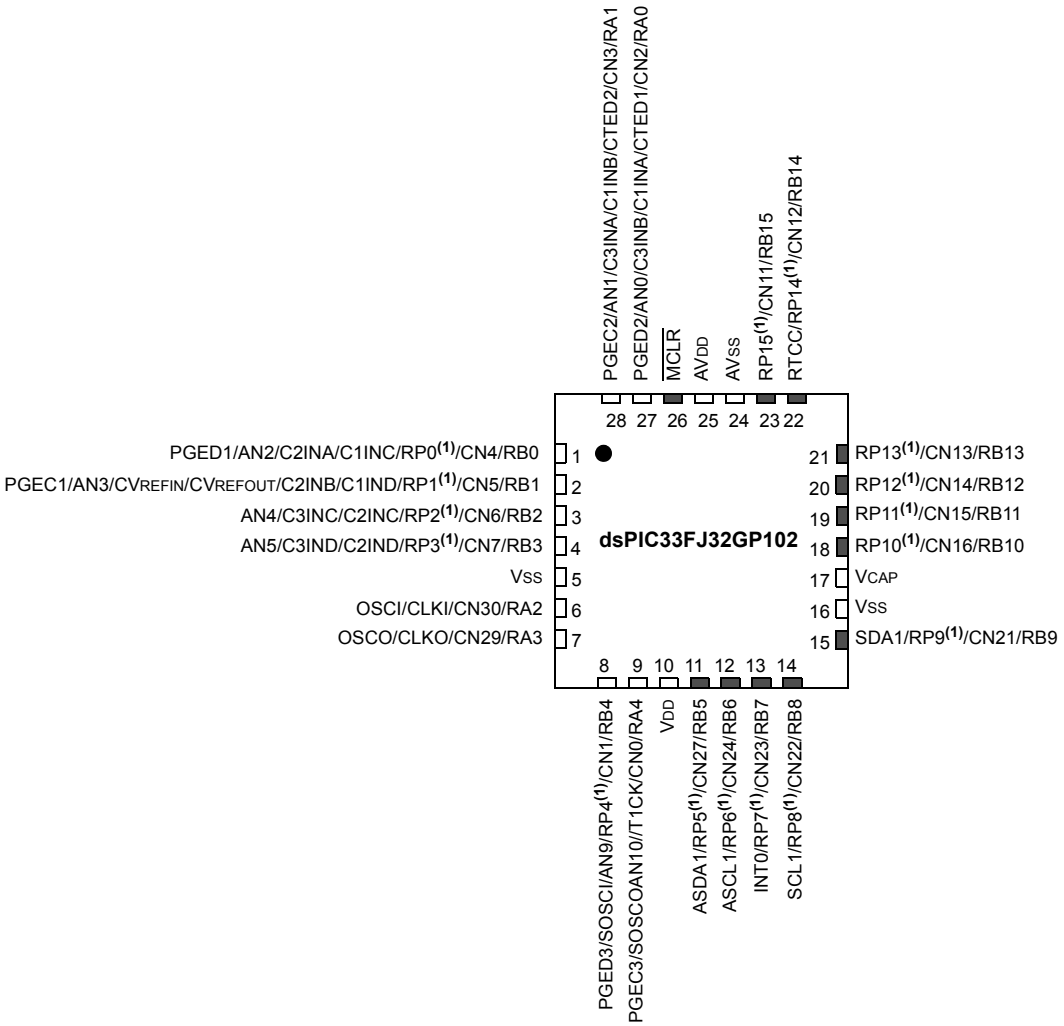

Note 1: The RPn pins can be used by any remappable peripheral. See Table 1 for the list of available peripherals.

2: The metal pad at the bottom of the device is not connected to any pins and is recommended to be connected to VSS externally.

© 2011-2012 Microchip Technology Inc.

Pin Diagrams (Continued)

28-Pin QFN(2)

■ = Pins are up to 5V tolerant

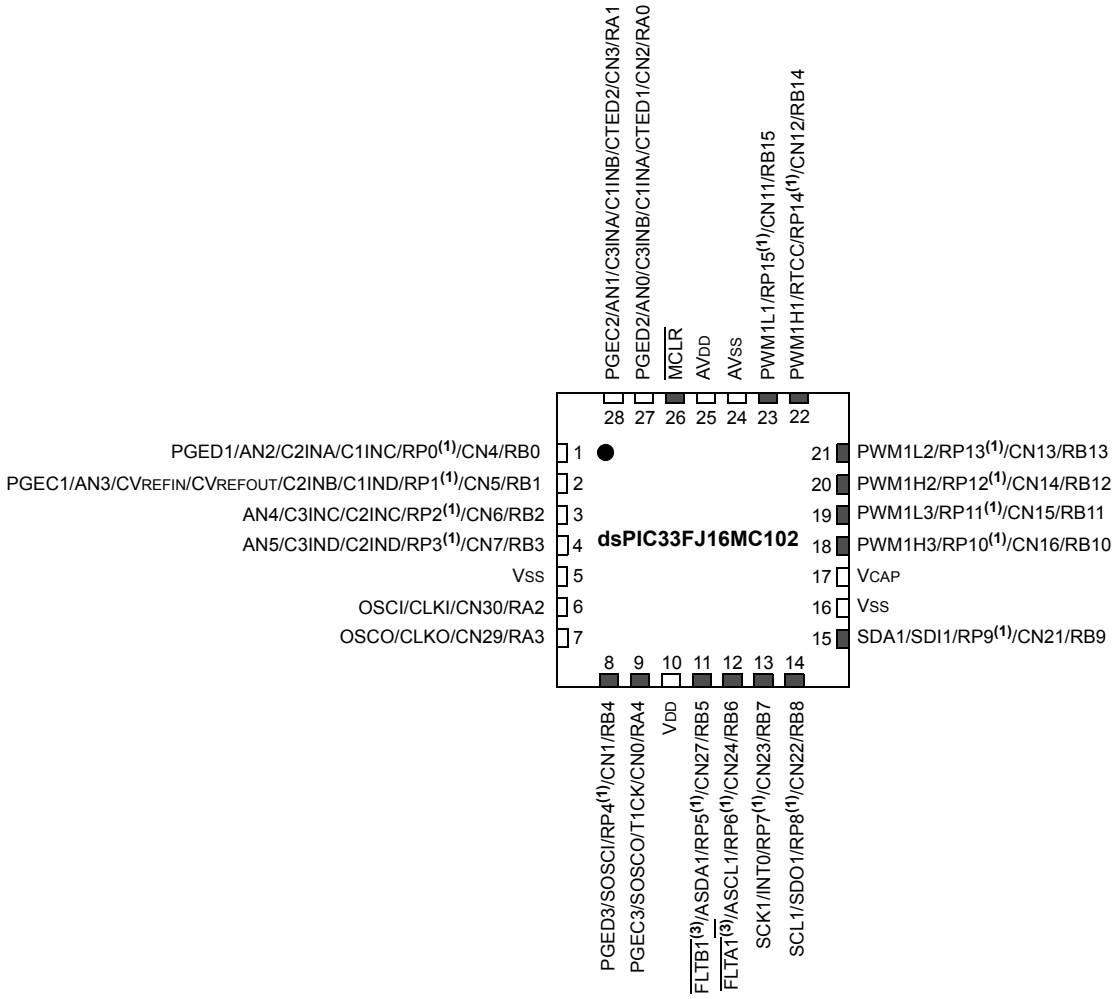

Note 1: The RPn pins can be used by any remappable peripheral. See Table 1 for the list of available peripherals.

2: The metal pad at the bottom of the device is not connected to any pins and is recommended to be connected to VSS externally.

3: The PWM Fault pins are enabled and asserted during any Reset event. Refer to **Section 15.2 "PWM Faults"** for more information on the PWM Faults.

Pin Diagrams (Continued)

28-Pin QFN(2)

■ = Pins are up to 5V tolerant

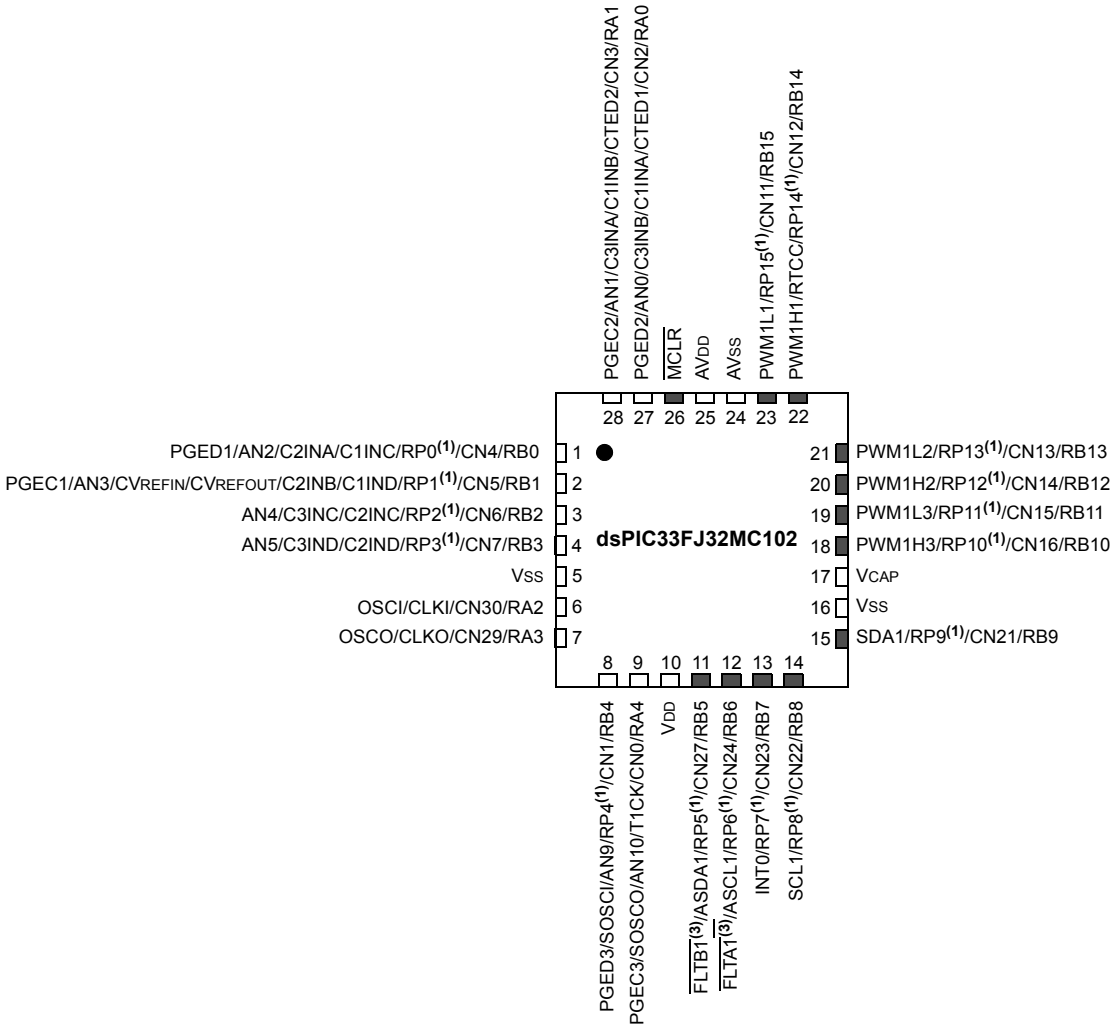

Note 1: The RPn pins can be used by any remappable peripheral. See Table 1 for the list of available peripherals.

2: The metal pad at the bottom of the device is not connected to any pins and is recommended to be connected to VSS externally.

3: The PWM Fault pins are enabled and asserted during any Reset event. Refer to **Section 15.2 "PWM Faults"** for more information on the PWM Faults.

© 2011-2012 Microchip Technology Inc.

Pin Diagrams (Continued)

36-Pin VTLA(2)

■ = Pins are up to 5V tolerant

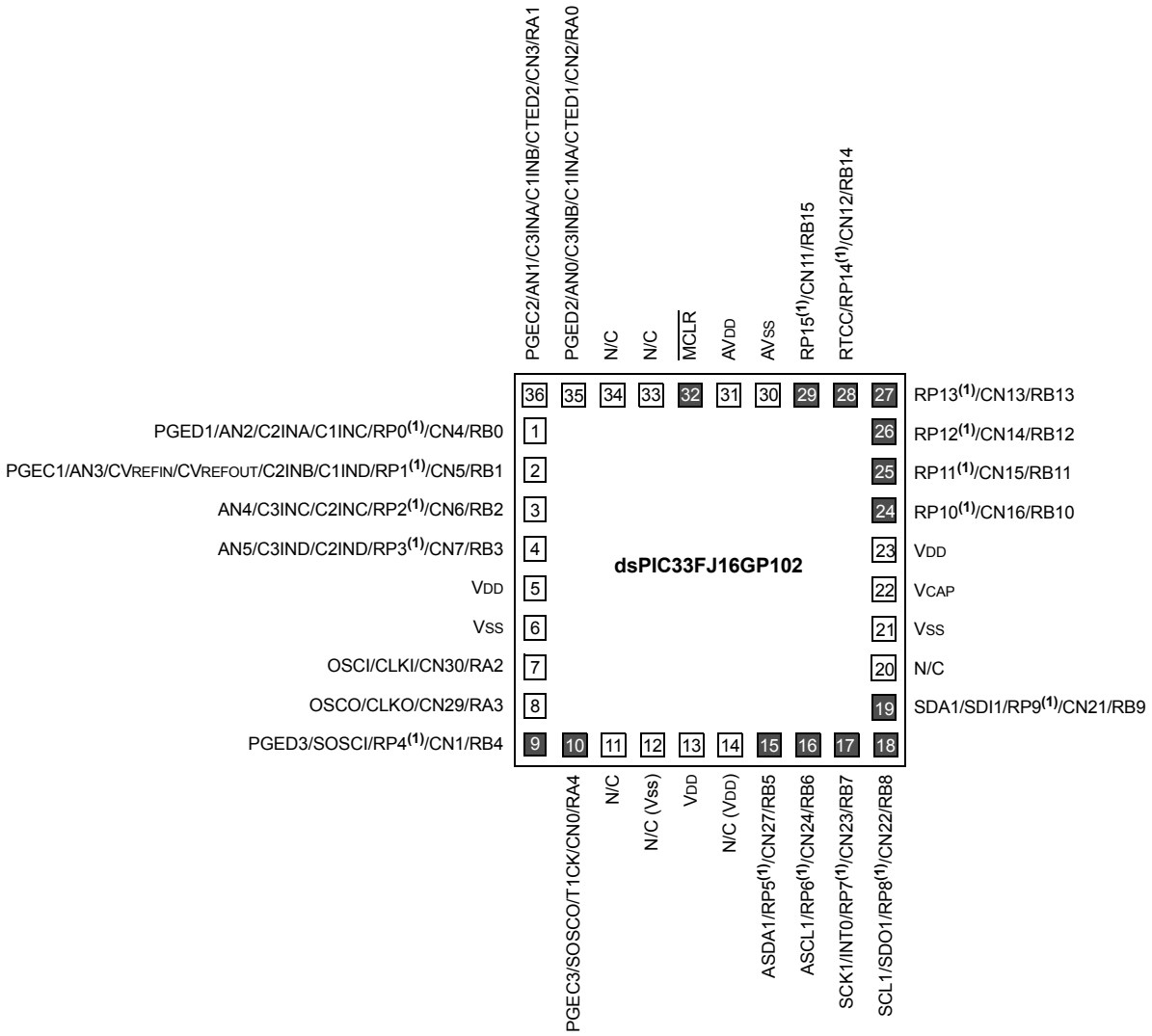

Note 1: The RPn pins can be used by any remappable peripheral. See Table 1 for the list of available peripherals.

2: The metal pad at the bottom of the device is not connected to any pins and is recommended to be connected to VSS externally.

Pin Diagrams (Continued)

36-Pin VTLA(2)

■ = Pins are up to 5V tolerant

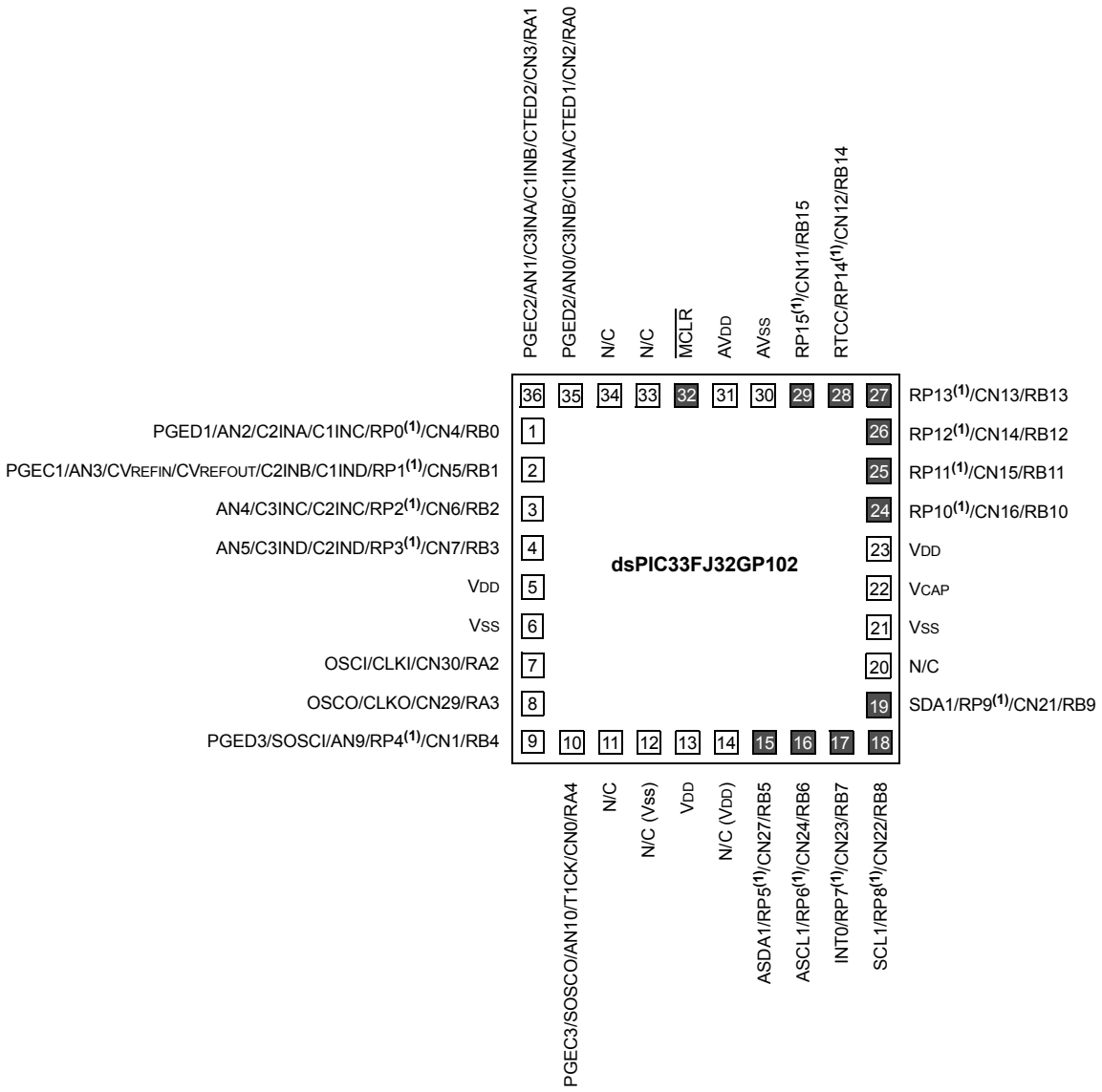

Note 1: The RPn pins can be used by any remappable peripheral. See Table 1 for the list of available peripherals.

2: The metal pad at the bottom of the device is not connected to any pins and is recommended to be connected to VSS externally.

© 2011-2012 Microchip Technology Inc.

Pin Diagrams (Continued)

36-Pin VTLA(2)

■ = Pins are up to 5V tolerant

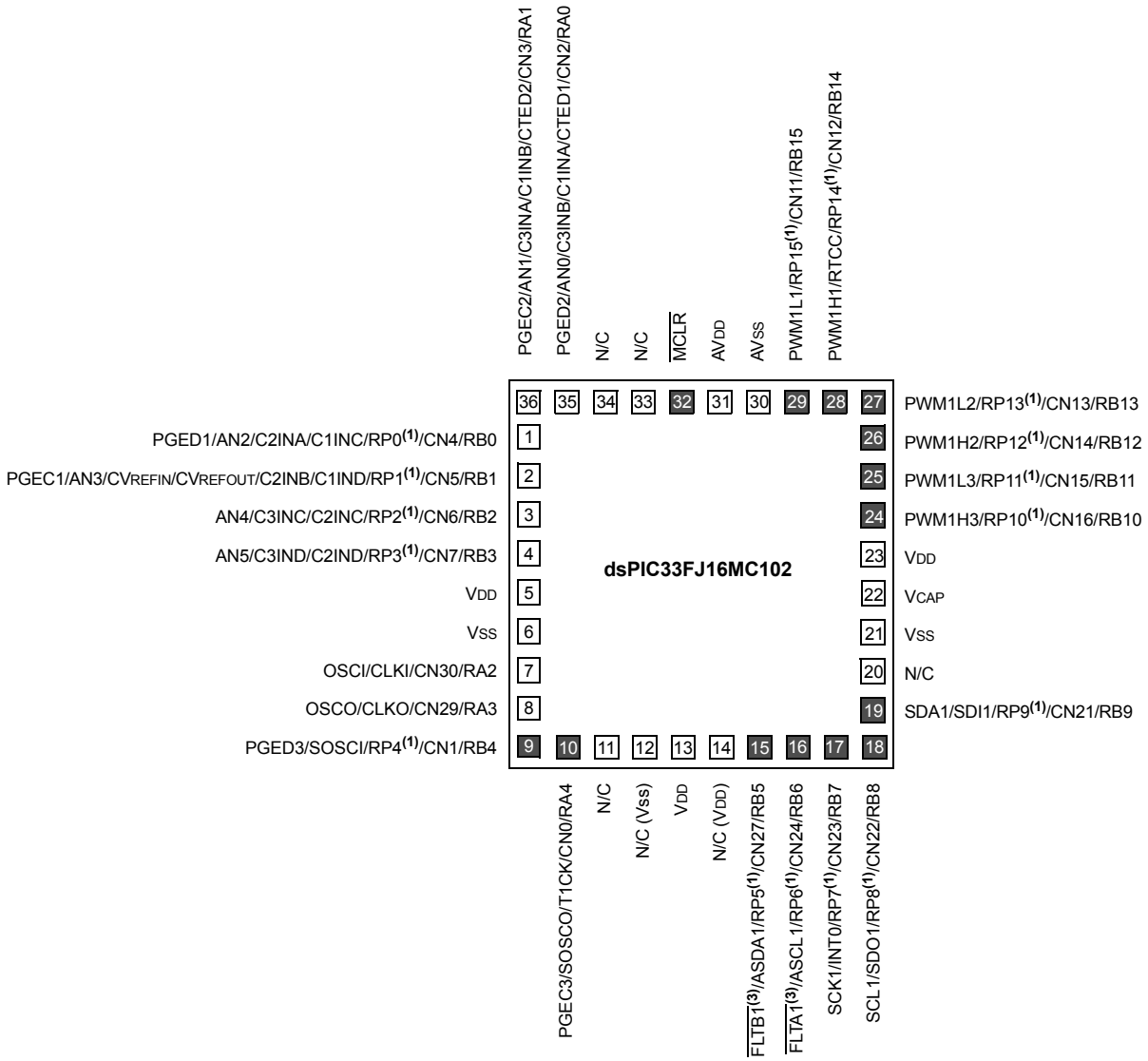

Note 1: The RPn pins can be used by any remappable peripheral. See Table 1 for the list of available peripherals.

2: The metal pad at the bottom of the device is not connected to any pins and is recommended to be connected to VSS externally.

3: The PWM Fault pins are enabled and asserted during any Reset event. Refer to **Section 15.2 "PWM Faults"** for more information on the PWM Faults.

Pin Diagrams (Continued)

36-Pin VTLA(2)

■ = Pins are up to 5V tolerant

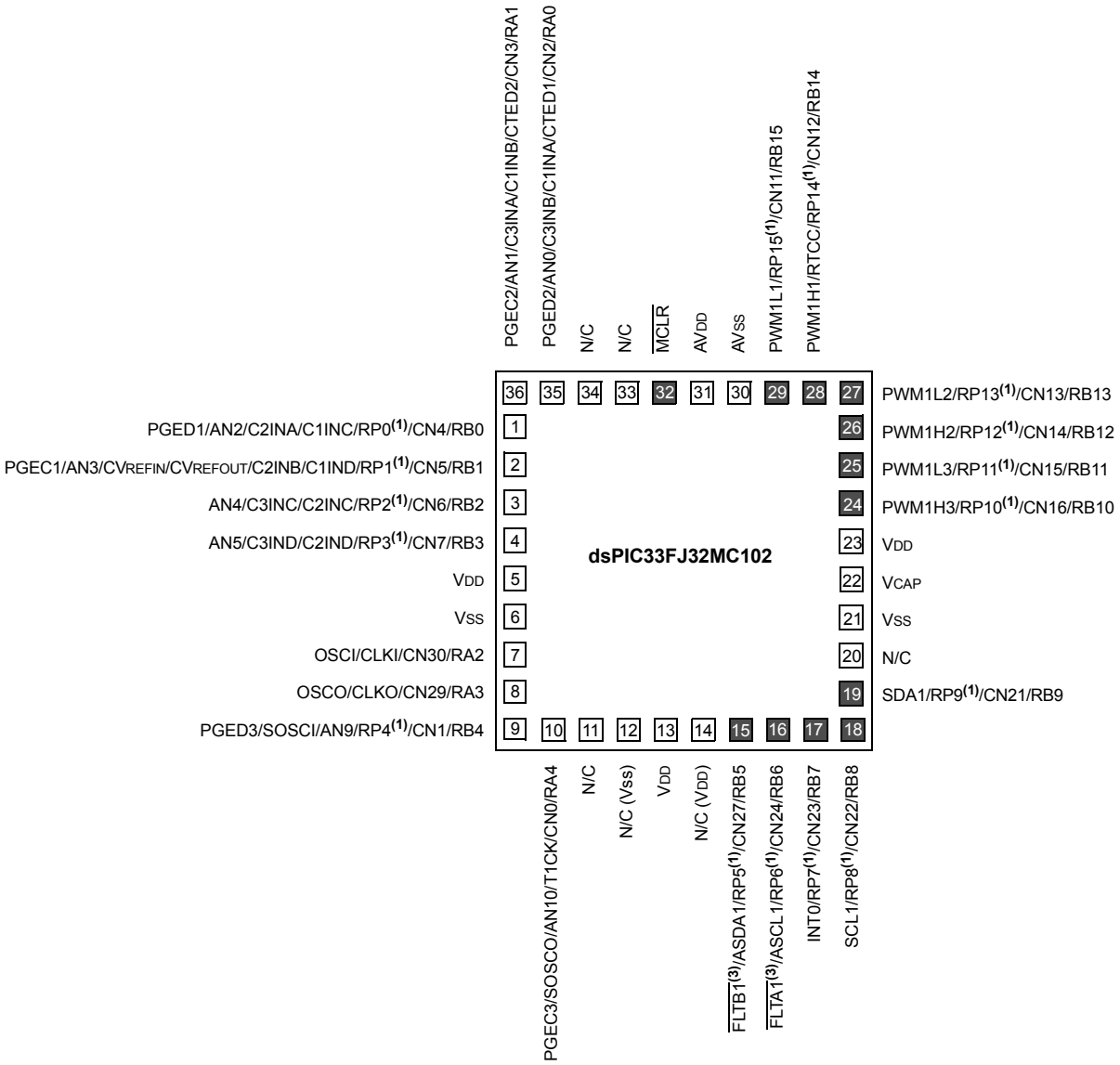

Note 1: The RPn pins can be used by any remappable peripheral. See Table 1 for the list of available peripherals.

2: The metal pad at the bottom of the device is not connected to any pins and is recommended to be connected to VSS externally.

3: The PWM Fault pins are enabled and asserted during any Reset event. Refer to **Section 15.2 "PWM Faults"** for more information on the PWM Faults.

© 2011-2012 Microchip Technology Inc.

Pin Diagrams (Continued)

44-Pin TQFP

■ = Pins are up to 5V tolerant

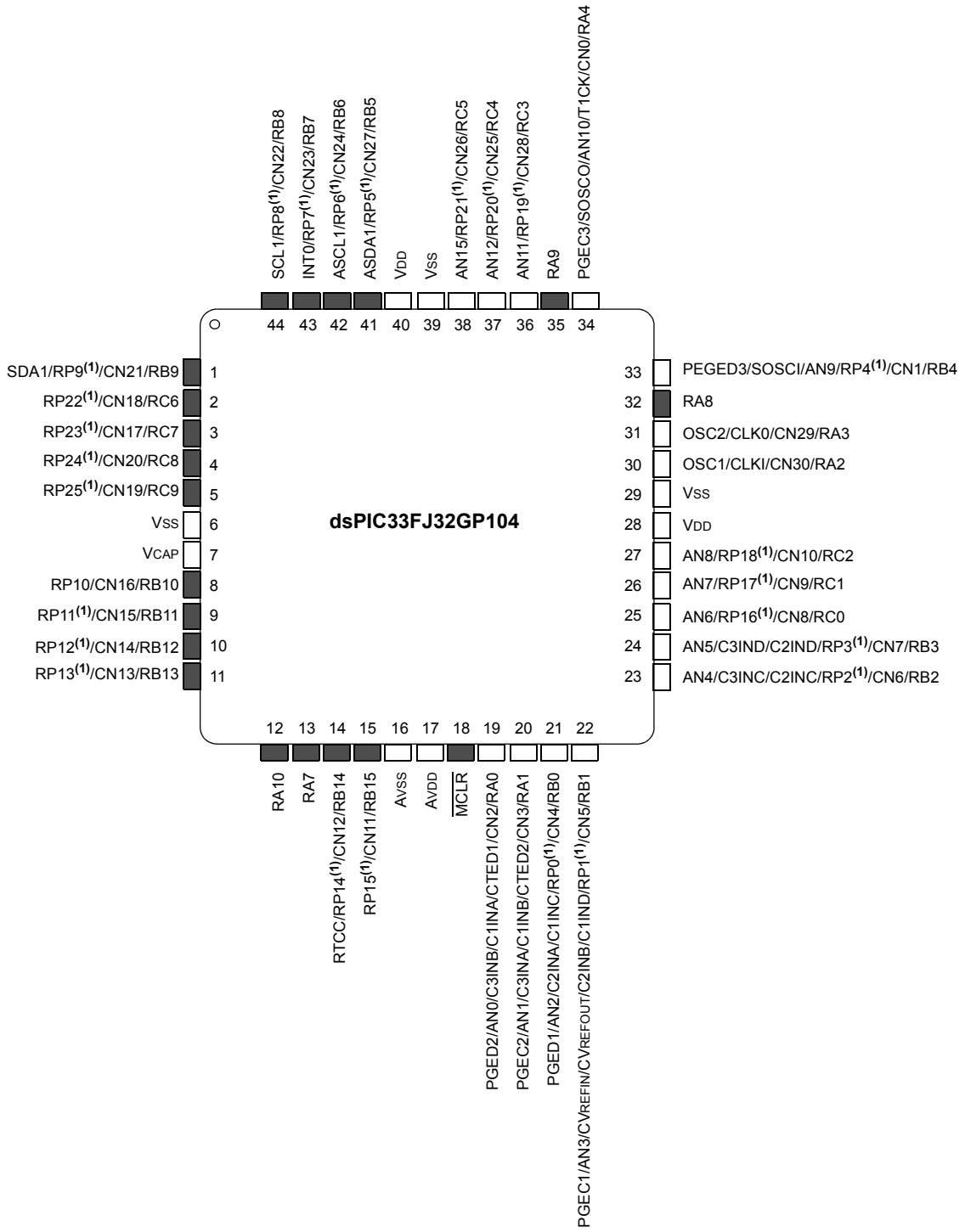

Note 1: The RPn pins can be used by any remappable peripheral. See Table 1 for the list of available peripherals.

Pin Diagrams (Continued)

44-Pin TQFP

■ = Pins are up to 5V tolerant

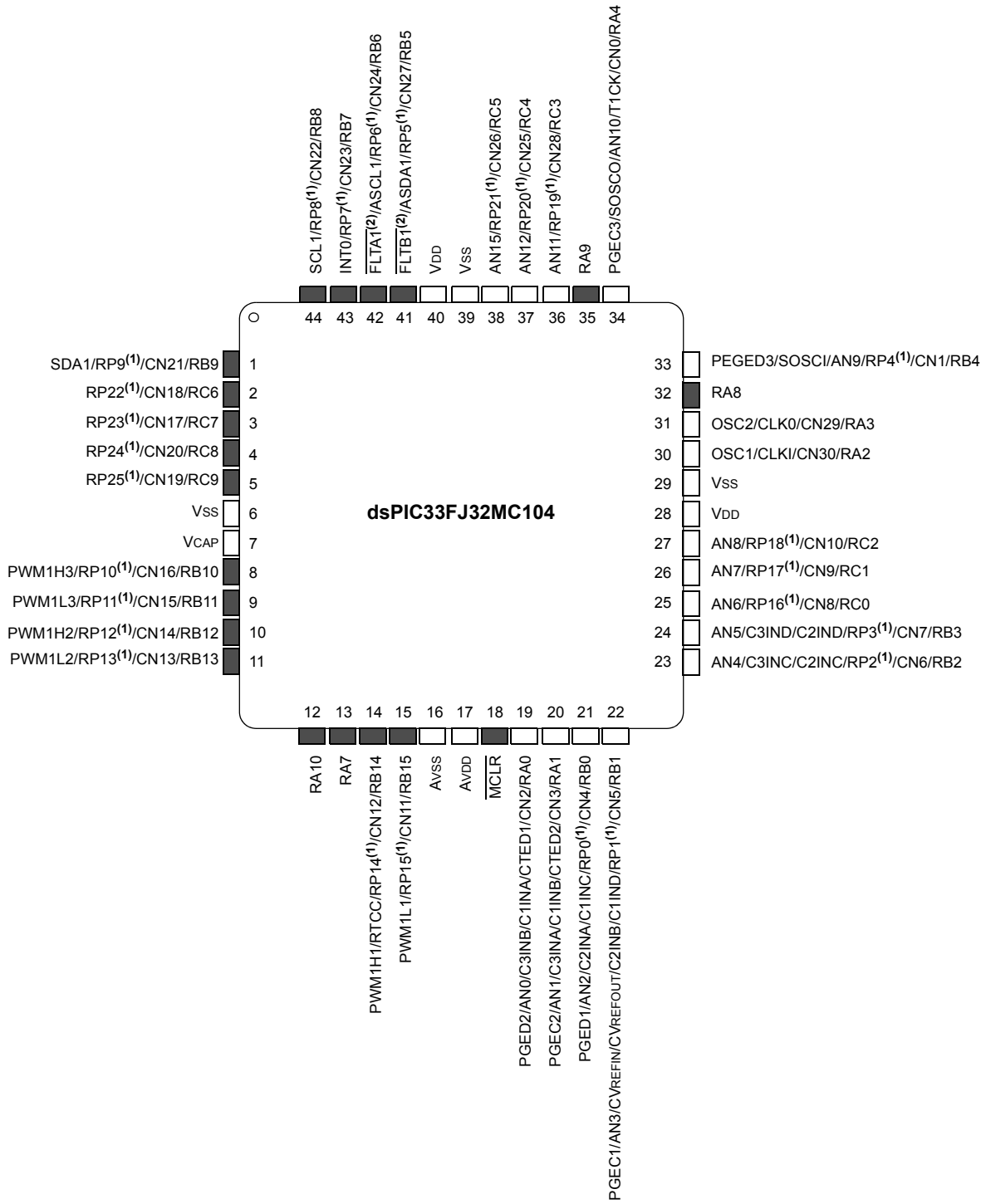

Note 1: The RPn pins can be used by any remappable peripheral. See Table 1 for the list of available peripherals.

2: The PWM Fault pins are enabled and asserted during any Reset event. Refer to **Section 15.2 "PWM Faults"** for more information on the PWM Faults.

© 2011-2012 Microchip Technology Inc.

Pin Diagrams (Continued)

44-Pin QFN(2)

■ = Pins are up to 5V tolerant

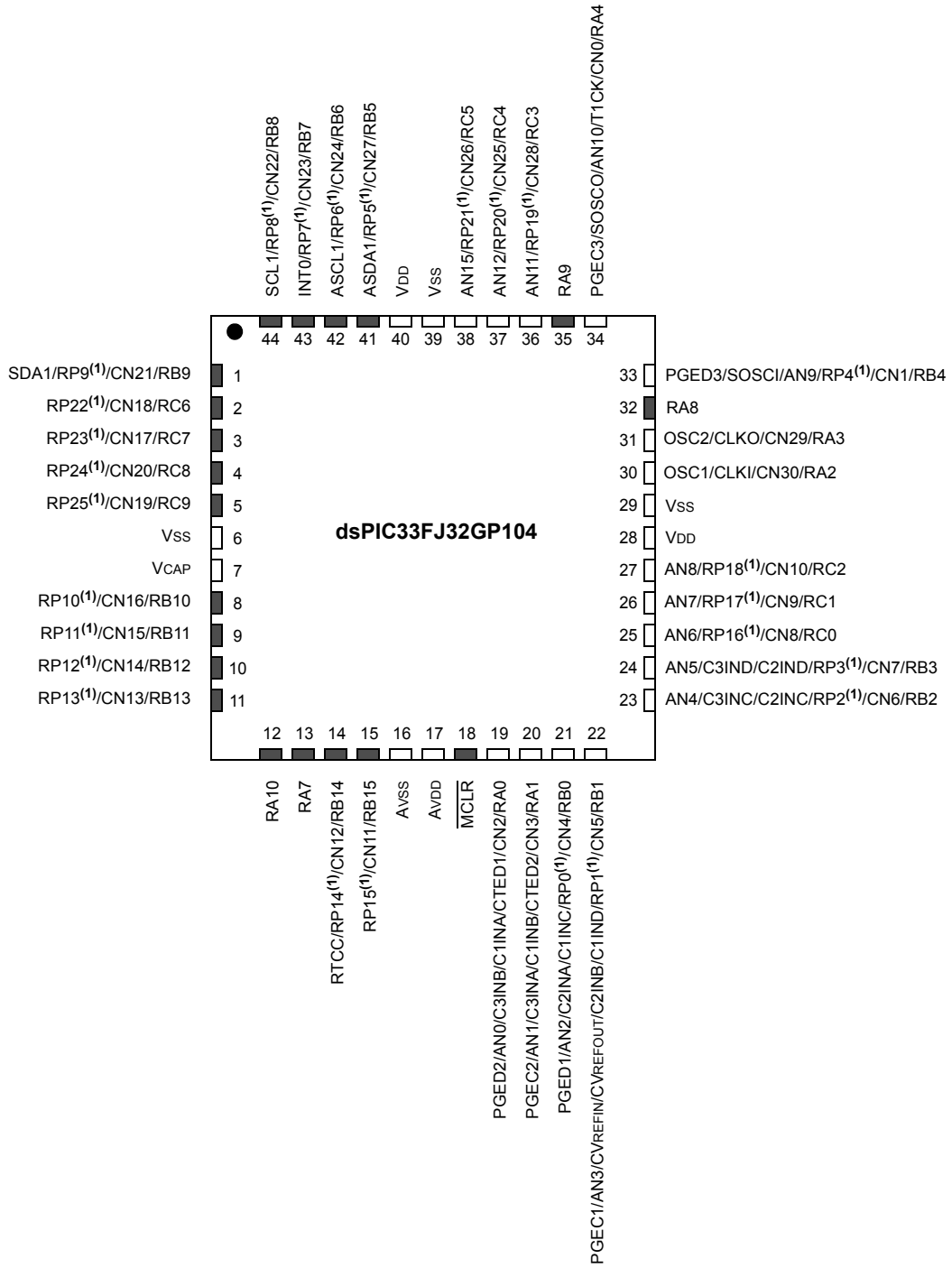

Note 1: The RPn pins can be used by any remappable peripheral. See Table 1 for the list of available peripherals.

2: The metal pad at the bottom of the device is not connected to any pins and is recommended to be connected to VSS externally.

Pin Diagrams (Continued)

44-Pin QFN(2)

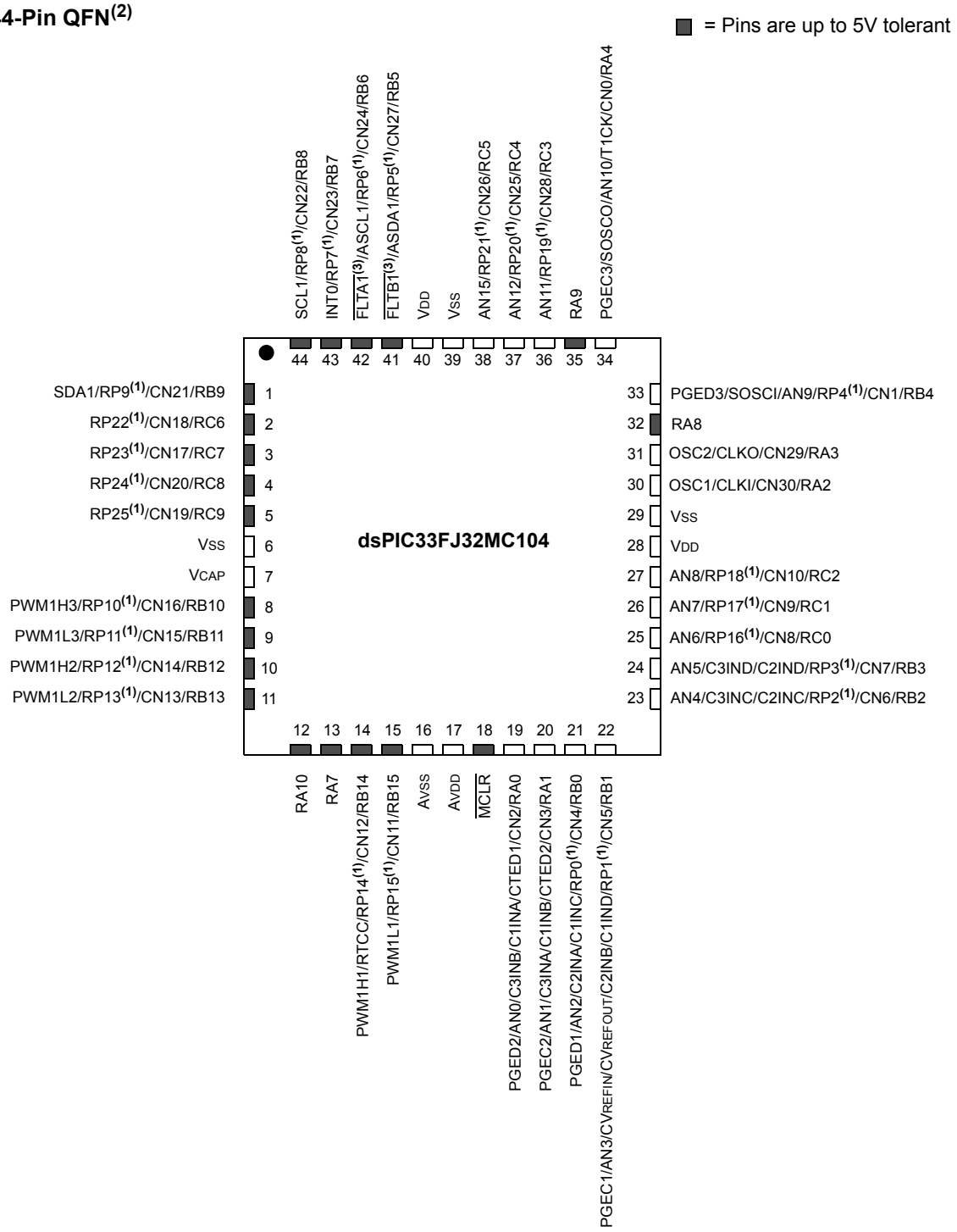

Note 1: The RPn pins can be used by any remappable peripheral. See Table 1 for the list of available peripherals.

2: The metal pad at the bottom of the device is not connected to any pins and is recommended to be connected to VSS externally.

3: The PWM Fault pins are enabled and asserted during any Reset event. Refer to **Section 15.2 "PWM Faults"** for more information on the PWM Faults.

© 2011-2012 Microchip Technology Inc.

Pin Diagrams (Continued)

44-Pin TLA(2)

■ = Pins are up to 5V tolerant

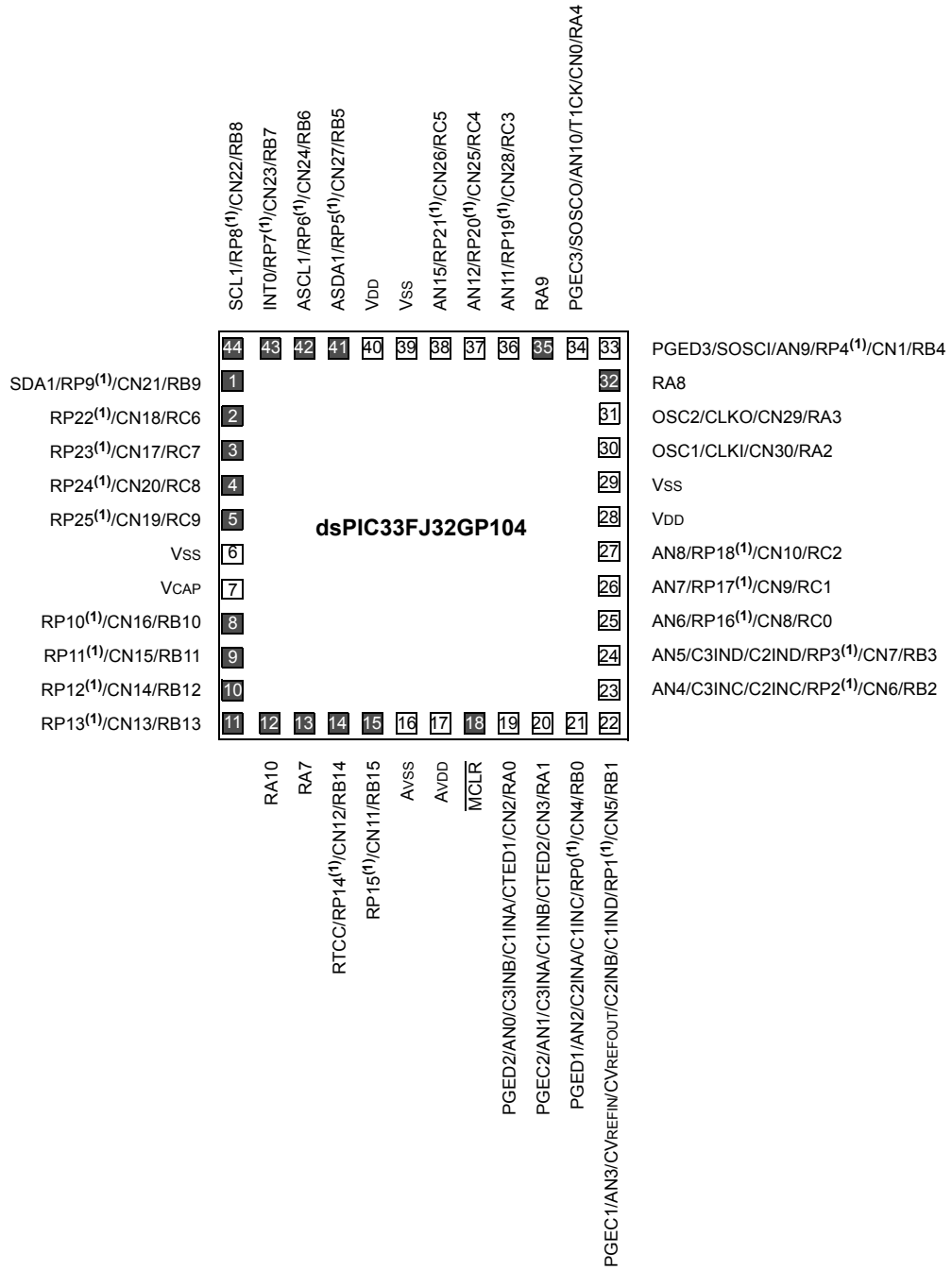

Note 1: The RPn pins can be used by any remappable peripheral. See Table 1 for the list of available peripherals.

2: The metal pad at the bottom of the device is not connected to any pins and is recommended to be connected to VSS externally.

Pin Diagrams (Continued)

44-Pin TLA(2)

■ = Pins are up to 5V tolerant

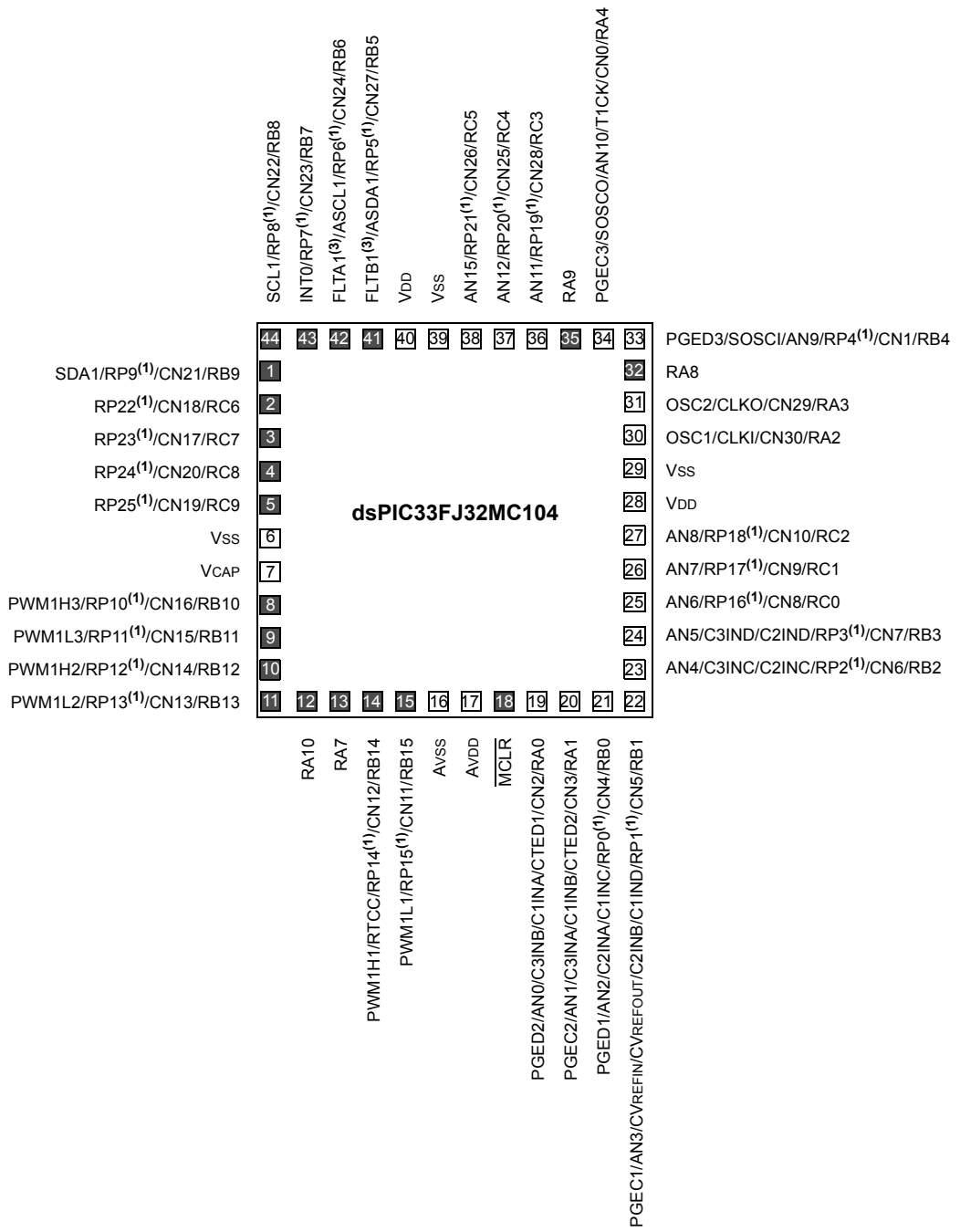

Note 1: The RPn pins can be used by any remappable peripheral. See Table 1 for the list of available peripherals.

2: The metal pad at the bottom of the device is not connected to any pins and is recommended to be connected to VSS externally.

3: The PWM Fault pins are enabled and asserted during any Reset event. Refer to **Section 15.2 "PWM Faults"** for more information on the PWM Faults.

© 2011-2012 Microchip Technology Inc.

Table of Contents

dsPIC33FJ16(GP/MC)101/102 and dsPIC33FJ32(GP/MC)101/102/104 Product Families 2
1.0 Device Overview 27
2.0 Guidelines for Getting Started with 16-bit Digital Signal Controllers 33
3.0 CPU 37
4.0 Memory Organization 49
5.0 Flash Program Memory 83
6.0 Resets 87
7.0 Interrupt Controller 95
8.0 Oscillator Configuration 125
9.0 Power-Saving Features 133
10.0 I/O Ports 139
11.0 Timer1 163
12.0 Timer2/3 and Timer4/5 165
13.0 Input Capture 173
14.0 Output Compare 175
15.0 Motor Control PWM Module 179
16.0 Serial Peripheral Interface (SPI) 195
17.0 Inter-Integrated Circuit™ (I^2C™) 201
18.0 Universal Asynchronous Receiver Transmitter (UART) 209
19.0 10-Bit Analog-to-Digital Converter (ADC) 215
20.0 Comparator Module 229
21.0 Real-Time Clock and Calendar (RTCC) 241
22.0 Charge Time Measurement Unit (CTMU) 253
23.0 Special Features 259
24.0 Instruction Set Summary 267
25.0 Development Support 275
26.0 Electrical Characteristics 279
27.0 Packaging Information 337
Appendix A: Revision History 367
Index 375
The Microchip Web Site 381
Customer Change Notification Service 381
Customer Support 381
Reader Response 382
Product Identification System 383

TO OUR VALUED CUSTOMERS

It is our intention to provide our valued customers with the best documentation possible to ensure successful use of your Microchip products. To this end, we will continue to improve our publications to better suit your needs. Our publications will be refined and enhanced as new volumes and updates are introduced.

If you have any questions or comments regarding this publication, please contact the Marketing Communications Department via E-mail at **docerrors@microchip.com** or fax the **Reader Response Form** in the back of this data sheet to (480) 792-4150. We welcome your feedback.

Most Current Data Sheet

To obtain the most up-to-date version of this data sheet, please register at our Worldwide Web site at:

http://www.microchip.com

You can determine the version of a data sheet by examining its literature number found on the bottom outside corner of any page. The last character of the literature number is the version number, (e.g., DS30000A is version A of document DS30000).

Errata

An errata sheet, describing minor operational differences from the data sheet and recommended workarounds, may exist for current devices. As device/documentation issues become known to us, we will publish an errata sheet. The errata will specify the revision of silicon and revision of document to which it applies.

To determine if an errata sheet exists for a particular device, please check with one of the following:

- Microchip's Worldwide Web site; **http://www.microchip.com**
- Your local Microchip sales office (see last page)

When contacting a sales office, please specify which device, revision of silicon and data sheet (include literature number) you are using.

Customer Notification System

Register on our web site at **www.microchip.com** to receive the most current information on all of our products.

© 2011-2012 Microchip Technology Inc.

Referenced Sources

This device data sheet is based on the following individual chapters of the *"dsPIC33F/PIC24H Family Reference Manual"*. These documents should be considered as the primary reference for the operation of a particular module or device feature.

Note 1: To access the documents listed below, browse to the documentation section of the dsPIC33FJ16MC102 product page of the Microchip Web site (www.microchip.com).

In addition to parameters, features, and other documentation, the resulting page provides links to the related family reference manual sections.

- **Section 2. "CPU"** (DS70204)
- **Section 3. "Data Memory"** (DS70202)
- **Section 4. "Program Memory"** (DS70203)
- **Section 5. "Flash Programming"** (DS70191)
- **Section 8. "Reset"** (DS70192)
- **Section 9. "Watchdog Timer and Power-Saving Modes"** (DS70196)
- **Section 11. "Timers"** (DS70205)
- **Section 12. "Input Capture"** (DS70198)
- **Section 13. "Output Compare"** (DS70209)
- **Section 14. "Motor Control PWM"** (DS70187)
- **Section 16. "Analog-to-Digital Converter (ADC)"** (DS70183)
- **Section 17. "UART"** (DS70188)
- **Section 18. "Serial Peripheral Interface (SPI)"** (DS70206)
- **Section 19. "Inter-Integrated Circuit™ (I^2C™)"** (DS70195)
- **Section 23. "CodeGuard Security"** (DS70199)
- **Section 24. "Programming and Diagnostics"** (DS70207)
- **Section 25. "Device Configuration"** (DS70194)
- **Section 30. "I/O Ports with Peripheral Pin Select (PPS)"** (DS70190)
- **Section 37. "Real-Time Clock and Calendar (RTCC)"** (DS70301)
- **Section 51. "Introduction (Part VI)"** (DS70655)
- **Section 52. "Oscillator (Part VI)"** (DS70644)
- **Section 53. "Interrupts (Part VI)"** (DS70633)
- **Section 54. "Comparator with Blanking"** (DS70647)
- **Section 55. "Charge Time Measurement Unit (CTMU)"** (DS70635)

NOTES:

© 2011-2012 Microchip Technology Inc.

1.0 DEVICE OVERVIEW

Note: This data sheet summarizes the features of the dsPIC33FJ16(GP/MC)101/102 and dsPIC33FJ32(GP/MC)101/102/104 devices. However, it is not intended to be a comprehensive reference source. To complement the information in this data sheet, refer to the latest family reference sections of the *"dsPIC33F/PIC24H Family Reference Manual"*, which are available from the Microchip web site (www.microchip.com).

This data sheet contains device-specific information for dsPIC33FJ16(GP/MC)101/102 and dsPIC33FJ32(GP/MC)101/102/104 Digital Signal Controller (DSC) Devices. These devices contain extensive Digital Signal Processor (DSP) functionality with a high-performance, 16-bit microcontroller (MCU) architecture.

Figure 1-1 shows a general block diagram of the core and peripheral modules in the dsPIC33FJ16(GP/MC)101/102 and dsPIC33FJ32(GP/MC)101/102/104 family of devices. Table 1-1 lists the functions of the various pins shown in the pinout diagrams.

FIGURE 1-1: dsPIC33FJ16(GP/MC)101/102 AND dsPIC33FJ32(GP/MC)101/102/104 BLOCK DIAGRAM

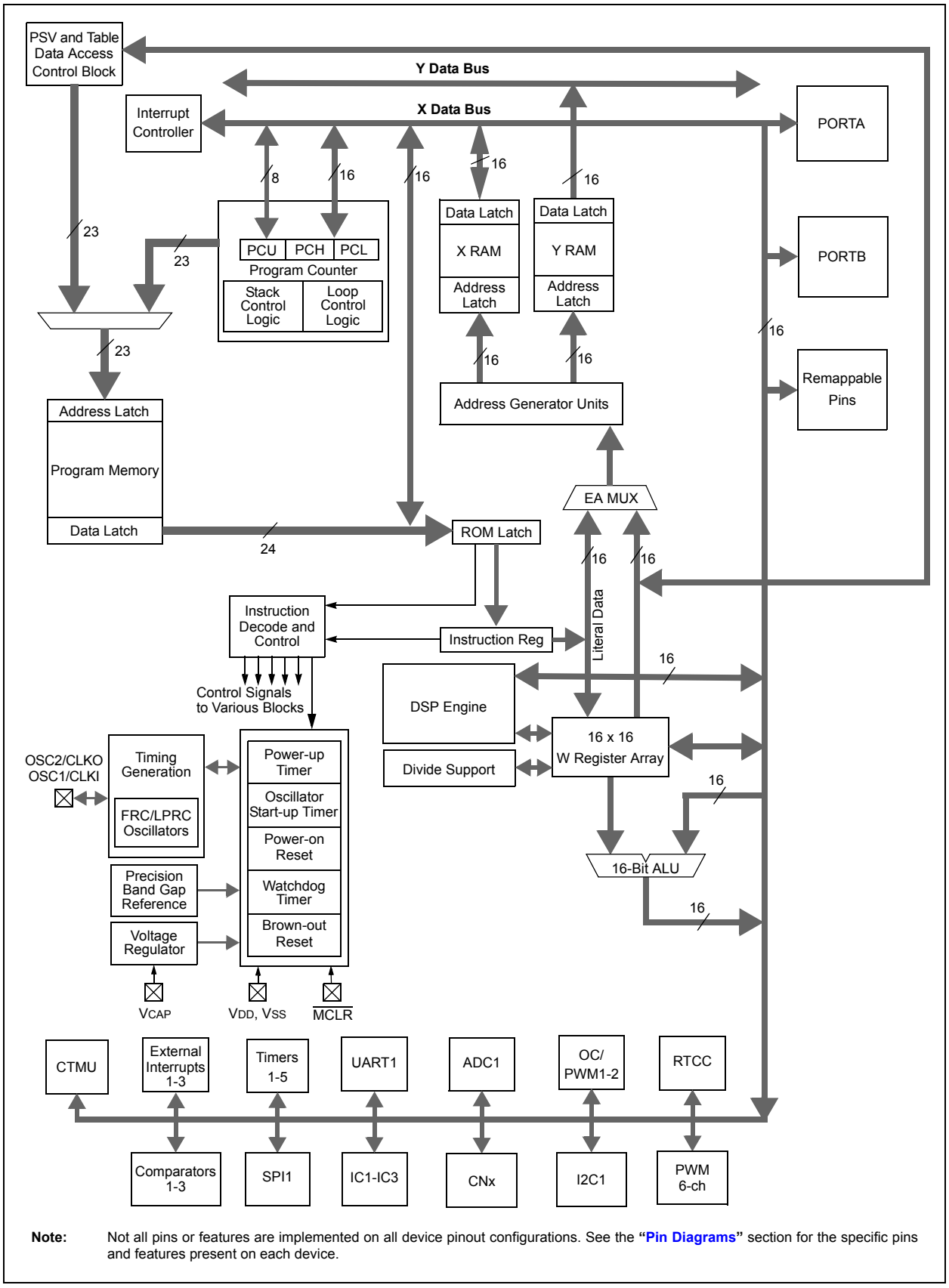

Note: Not all pins or features are implemented on all device pinout configurations. See the **"Pin Diagrams"** section for the specific pins and features present on each device.

© 2011-2012 Microchip Technology Inc.

TABLE 1-1: PINOUT I/O DESCRIPTIONS

Pin Name	Pin Type	Buffer Type	PPS	Description
AN0-AN12, AN15[5]	I	Analog	No	Analog input channels.
CLKI CLKO	I O	ST/CMOS —	No No	External clock source input. Always associated with OSC1 pin function. Oscillator crystal output. Connects to crystal or resonator in Crystal Oscillator mode. Optionally functions as CLKO in RC and EC modes. Always associated with OSC2 pin function.
OSC1 OSC2	I I/O	ST/CMOS —	No No	Oscillator crystal input. ST buffer when configured in RC mode; CMOS otherwise. Oscillator crystal output. Connects to crystal or resonator in Crystal Oscillator mode. Optionally functions as CLKO in RC and EC modes.
SOSCI SOSCO	I O	ST/CMOS —	No No	32.768 kHz low-power oscillator crystal input; CMOS otherwise. 32.768 kHz low-power oscillator crystal output.
CN0-CN30[5]	I	ST	No	Change Notification inputs. Can be software programmed for internal weak pull-ups on all inputs.
IC1-IC3	I	ST	Yes	Capture Inputs 1/2/3.
OCFA OC1-OC2	I O	ST —	Yes Yes	Compare Fault A input (for Compare Channels 1 and 2). Compare Outputs 1 through 2.
INT0 INT1 INT2	I I I	ST ST ST	No Yes Yes	External Interrupt 0. External Interrupt 1. External Interrupt 2.
RA0-RA4, RA7-RA10[5]	I/O	ST	No	PORTA is a bidirectional I/O port.
RB0-RB15[5]	I/O	ST	No	PORTB is a bidirectional I/O port.
RC0-RC9[5]	I/O	ST	No	PORTC is a bidirectional I/O port.
T1CK T2CK T3CK T4CK[6] T5CK[6]	I I I I I	ST ST ST ST ST	No Yes Yes Yes Yes	Timer1 external clock input. Timer2 external clock input. Timer3 external clock input. Timer4 external clock input. Timer5 external clock input.
$\overline{\text{U1CTS}}$ $\overline{\text{U1RTS}}$ U1RX U1TX	I O I O	ST — ST —	Yes Yes Yes Yes	UART1 Clear-to-Send. UART1 Ready-to-Send. UART1 receive. UART1 transmit.
SCK1 SDI1 SDO1	I/O I O	ST ST —	Yes Yes Yes	Synchronous serial clock input/output for SPI1. SPI1 data in. SPI1 data out.

Legend: CMOS = CMOS compatible input or output; Analog = Analog input; P = Power; ST = Schmitt Trigger input with CMOS levels; O = Output; I = Input; PPS = Peripheral Pin Select

Note 1: An external pull-down resistor is required for the $\overline{\text{FLTA1}}$ pin on dsPIC33FJXXMC101 (20-pin) devices.

2: The $\overline{\text{FLTA1}}$ pin and the PWM1Lx/PWM1Hx pins are available in dsPIC(16/32)MC10X devices only.

3: The $\overline{\text{FLTB1}}$ pin is available in dsPIC(16/32)MC102/104 devices only.

4: The PWM Fault pins are enabled during any Reset event. Refer to **Section 15.2 "PWM Faults"** for more information on the PWM Faults.

5: Not all pins are available on all devices. Refer to the specific device in the **"Pin Diagrams"** section for availability.

6: This pin is available in dsPIC33FJ32(GP/MC)104 (44-pin) devices only.

TABLE 1-1: PINOUT I/O DESCRIPTIONS (CONTINUED)

Pin Name	Pin Type	Buffer Type	PPS	Description
SCL1	I/O	ST	No	Synchronous serial clock input/output for I2C1.
SDA1	I/O	ST	No	Synchronous serial data input/output for I2C1.
ASCL1	I/O	ST	No	Alternate synchronous serial clock input/output for I2C1.
ASDA1	I/O	ST	No	Alternate synchronous serial data input/output for I2C1.
$\overline{\text{FLTA1}}$(1,2,4)	I	ST	No	PWM1 Fault A input.
$\overline{\text{FLTB1}}$(3,4)	I	ST	No	PWM1 Fault B input.
PWM1L1	O	—	No	PWM1 Low Output 1
PWM1H1	O	—	No	PWM1 High Output 1
PWM1L2	O	—	No	PWM1 Low Output 2
PWM1H2	O	—	No	PWM1 High Output 2
PWM1L3	O	—	No	PWM1 Low Output 3
PWM1H3	O	—	No	PWM1 High Output 3
RTCC	O	Digital	No	RTCC Alarm output.
CTPLS	O	Digital	Yes	CTMU pulse output.
CTED1	I	Digital	No	CTMU External Edge Input 1.
CTED2	I	Digital	No	CTMU External Edge Input 2.
CVREFIN	I	Analog	No	Comparator Voltage Positive Reference Input.
CVREFOUT	O	Analog	No	Comparator Voltage Positive Reference Output.
C1INA	I	Analog	No	Comparator 1 Positive Input A.
C1INB	I	Analog	No	Comparator 1 Negative Input B.
C1INC	I	Analog	No	Comparator 1 Negative Input C.
C1IND	I	Analog	No	Comparator 1 Negative Input D.
C1OUT	O	Digital	Yes	Comparator 1 Output.
C2INA	I	Analog	No	Comparator 2 Positive Input A.
C2INB	I	Analog	No	Comparator 2 Negative Input B.
C2INC	I	Analog	No	Comparator 2 Negative Input C.
C2IND	I	Analog	No	Comparator 2 Negative Input D.
C2OUT	O	Digital	Yes	Comparator 2 Output.
C3INA	I	Analog	No	Comparator 3 Positive Input A.
C3INB	I	Analog	No	Comparator 3 Negative Input B.
C3INC	I	Analog	No	Comparator 3 Negative Input C.
C3IND	I	Analog	No	Comparator 3 Negative Input D.
C3OUT	O	Digital	Yes	Comparator 3 Output.
PGED1	I/O	ST	No	Data I/O pin for Programming/Debugging Communication Channel 1.
PGEC1	I	ST	No	Clock input pin for Programming/Debugging Communication Channel 1.
PGED2	I/O	ST	No	Data I/O pin for Programming/Debugging Communication Channel 2.
PGEC2	I	ST	No	Clock input pin for Programming/Debugging Communication Channel 2.
PGED3	I/O	ST	No	Data I/O pin for Programming/Debugging Communication Channel 3.
PGEC3	I	ST	No	Clock input pin for Programming/Debugging Communication Channel 3.
$\overline{\text{MCLR}}$	I/P	ST	No	Master Clear (Reset) input. This pin is an active-low Reset to the device.

Legend: CMOS = CMOS compatible input or output; Analog = Analog input; P = Power; ST = Schmitt Trigger input with CMOS levels; O = Output; I = Input; PPS = Peripheral Pin Select

Note 1: An external pull-down resistor is required for the $\overline{\text{FLTA1}}$ pin on dsPIC33FJXXMC101 (20-pin) devices.

2: The $\overline{\text{FLTA1}}$ pin and the PWM1Lx/PWM1Hx pins are available in dsPIC(16/32)MC10X devices only.

3: The $\overline{\text{FLTB1}}$ pin is available in dsPIC(16/32)MC102/104 devices only.

4: The PWM Fault pins are enabled during any Reset event. Refer to **Section 15.2 "PWM Faults"** for more information on the PWM Faults.

5: Not all pins are available on all devices. Refer to the specific device in the **"Pin Diagrams"** section for availability.

6: This pin is available in dsPIC33FJ32(GP/MC)104 (44-pin) devices only.

© 2011-2012 Microchip Technology Inc.

TABLE 1-1: PINOUT I/O DESCRIPTIONS (CONTINUED)

Pin Name	Pin Type	Buffer Type	PPS	Description
AV_{DD}	P	P	No	Positive supply for analog modules. This pin must be connected at all times. AV_{DD} is connected to V_{DD} in the 18-pin dsPIC33FJXXGP101 and 20-pin dsPIC33FJXXMC101 devices. In all other devices, AV_{DD} is separated from V_{DD}.
AV_{SS}	P	P	No	Ground reference for analog modules. AV_{SS} is connected to V_{SS} in the 18-pin dsPIC33FJXXGP101 and 20-pin dsPIC33FJXXMC101 devices. In all other devices, AV_{SS} is separated from V_{SS}.
V_{DD}	P	—	No	Positive supply for peripheral logic and I/O pins.
V_{CAP}	P	—	No	CPU logic filter capacitor connection.
V_{SS}	P	—	No	Ground reference for logic and I/O pins.

Legend: CMOS = CMOS compatible input or output; Analog = Analog input; P = Power; ST = Schmitt Trigger input with CMOS levels; O = Output; I = Input; PPS = Peripheral Pin Select

Note 1: An external pull-down resistor is required for the $\overline{FLTA1}$ pin on dsPIC33FJXXMC101 (20-pin) devices.

2: The $\overline{FLTA1}$ pin and the PWM1Lx/PWM1Hx pins are available in dsPIC(16/32)MC10X devices only.

3: The $\overline{FLTB1}$ pin is available in dsPIC(16/32)MC102/104 devices only.

4: The PWM Fault pins are enabled during any Reset event. Refer to **Section 15.2 "PWM Faults"** for more information on the PWM Faults.

5: Not all pins are available on all devices. Refer to the specific device in the **"Pin Diagrams"** section for availability.

6: This pin is available in dsPIC33FJ32(GP/MC)104 (44-pin) devices only.

NOTES:

© 2011-2012 Microchip Technology Inc.

2.0 GUIDELINES FOR GETTING STARTED WITH 16-BIT DIGITAL SIGNAL CONTROLLERS

Note 1: This data sheet summarizes the features of the dsPIC33FJ16(GP/MC)101/102 and dsPIC33FJ32(GP/MC)101/102/104 family devices. It is not intended to be a comprehensive reference source. To complement the information in this data sheet, refer to the *"dsPIC33F/PIC24H Family Reference Manual"*. Please see the Microchip web site (www.microchip.com) for the latest *"dsPIC33F/PIC24H Family Reference Manual"* sections.

2: Some registers and associated bits described in this section may not be available on all devices. Refer to **Section 4.0 "Memory Organization"** in this data sheet for device-specific register and bit information.

2.1 Basic Connection Requirements

Getting started with the dsPIC33FJ16(GP/MC)101/102 and dsPIC33FJ32(GP/MC)101/102/104 family of 16-bit Digital Signal Controllers (DSCs) requires attention to a minimal set of device pin connections before proceeding with development. The following is a list of pin names, which must always be connected:

- All VDD and VSS pins
  (see **Section 2.2 "Decoupling Capacitors"**)
- All AVDD and AVSS pins, if present on the device (regardless if ADC module is not used)
  (see **Section 2.2 "Decoupling Capacitors"**)
- VCAP
  (see **Section 2.3 "CPU Logic Filter Capacitor Connection (VCAP)"**)
- $\overline{\text{MCLR}}$ pin
  (see **Section 2.4 "Master Clear (MCLR) Pin"**)
- PGECx/PGEDx pins used for In-Circuit Serial Programming™ (ICSP™) and debugging purposes
  (see **Section 2.5 "ICSP Pins"**)
- OSC1 and OSC2 pins when external oscillator source is used
  (see **Section 2.6 "External Oscillator Pins"**)

2.2 Decoupling Capacitors

The use of decoupling capacitors on every pair of power supply pins, such as VDD, VSS, AVDD, and AVSS is required.

Consider the following criteria when using decoupling capacitors:

- **Value and type of capacitor:** Recommendation of 0.1 µF (100 nF), 10V-20V. This capacitor should be a low-ESR and have resonance frequency in the range of 20 MHz and higher. It is recommended that ceramic capacitors be used.
- **Placement on the printed circuit board:** The decoupling capacitors should be placed as close to the pins as possible. It is recommended to place the capacitors on the same side of the board as the device. If space is constricted, the capacitor can be placed on another layer on the PCB using a via; however, ensure that the trace length from the pin to the capacitor is within one-quarter inch (6 mm) in length.
- **Handling high-frequency noise:** If the board is experiencing high-frequency noise, upward of tens of MHz, add a second ceramic-type capacitor in parallel to the above described decoupling capacitor. The value of the second capacitor can be in the range of 0.01 µF to 0.001 µF. Place this second capacitor next to the primary decoupling capacitor. In high-speed circuit designs, consider implementing a decade pair of capacitances as close to the power and ground pins as possible. For example, 0.1 µF in parallel with 0.001 µF.
- **Maximizing performance:** On the board layout from the power supply circuit, run the power and return traces to the decoupling capacitors first, and then to the device pins. This ensures that the decoupling capacitors are first in the power chain. Equally important is to keep the trace length between the capacitor and the power pins to a minimum thereby reducing PCB track inductance.

FIGURE 2-1: RECOMMENDED MINIMUM CONNECTION

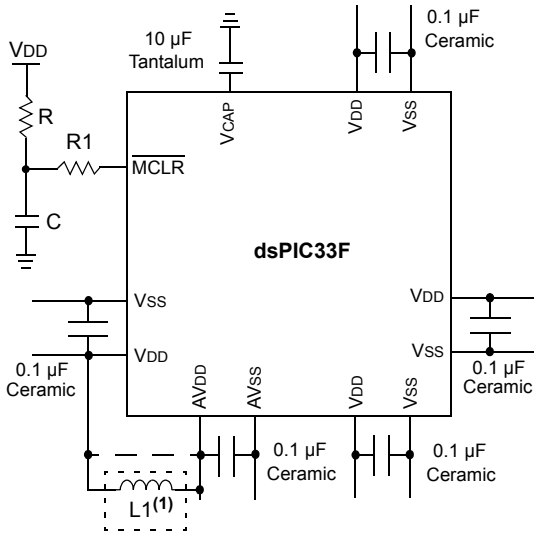

Note 1: As an option, instead of a hard-wired connection, an inductor (L1) can be substituted between VDD and AVDD to improve ADC noise rejection. The inductor impedance should be less than 1Ω and the inductor capacity greater than 10 mA.

Where:

$$f = \frac{F_{CNV}}{2} \quad \text{(i.e., ADC conversion rate/2)}$$

$$f = \frac{1}{(2\pi\sqrt{LC})}$$

$$L = \left(\frac{1}{(2\pi f\sqrt{C})}\right)^2$$

2.2.1 TANK CAPACITORS

On boards with power traces running longer than six inches in length, it is suggested to use a tank capacitor for integrated circuits including DSCs to supply a local power source. The value of the tank capacitor should be determined based on the trace resistance that connects the power supply source to the device, and the maximum current drawn by the device in the application. In other words, select the tank capacitor so that it meets the acceptable voltage sag at the device. Typical values range from 4.7 µF to 47 µF.

2.3 CPU Logic Filter Capacitor Connection (VCAP)

A low-ESR (< 5 Ohms) capacitor is required on the VCAP pin, which is used to stabilize the voltage regulator output voltage. The VCAP pin must not be connected to VDD, and must have a capacitor between 4.7 µF and 10 µF, 16V connected to ground. The type can be ceramic or tantalum. Refer to **Section 26.0 "Electrical Characteristics"** for additional information.

The placement of this capacitor should be close to the VCAP. It is recommended that the trace length not exceed one-quarter inch (6 mm). Refer to **Section 23.2 "On-Chip Voltage Regulator"** for details.

2.4 Master Clear ($\overline{\text{MCLR}}$) Pin

The $\overline{\text{MCLR}}$ pin provides two specific device functions:

- Device Reset
- Device programming and debugging

During device programming and debugging, the resistance and capacitance that can be added to the pin must be considered. Device programmers and debuggers drive the $\overline{\text{MCLR}}$ pin. Consequently, specific voltage levels (VIH and VIL) and fast signal transitions must not be adversely affected. Therefore, specific values of R and C will need to be adjusted based on the application and PCB requirements.

For example, as shown in Figure 2-2, it is recommended that the capacitor C, be isolated from the $\overline{\text{MCLR}}$ pin during programming and debugging operations.

Place the components shown in Figure 2-2 within one-quarter inch (6 mm) from the $\overline{\text{MCLR}}$ pin.

FIGURE 2-2: EXAMPLE OF $\overline{\text{MCLR}}$ PIN CONNECTIONS

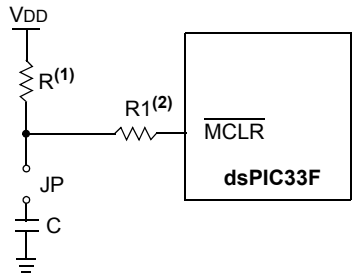

Note 1: R ≤ 10 kΩ is recommended. A suggested starting value is 10 kΩ. Ensure that the $\overline{\text{MCLR}}$ pin VIH and VIL specifications are met.

2: R1 ≤ 470Ω will limit any current flowing into $\overline{\text{MCLR}}$ from the external capacitor C, in the event of $\overline{\text{MCLR}}$ pin breakdown, due to Electrostatic Discharge (ESD) or Electrical Overstress (EOS). Ensure that the $\overline{\text{MCLR}}$ pin VIH and VIL specifications are met.

© 2011-2012 Microchip Technology Inc.

2.5 ICSP Pins

The PGECx and PGEDx pins are used for In-Circuit Serial Programming™ (ICSP™) and debugging purposes. It is recommended to keep the trace length between the ICSP connector and the ICSP pins on the device as short as possible. If the ICSP connector is expected to experience an ESD event, a series resistor is recommended, with the value in the range of a few tens of Ohms, not to exceed 100 Ohms.

Pull-up resistors, series diodes, and capacitors on the PGECx and PGEDx pins are not recommended as they will interfere with the programmer/debugger communications to the device. If such discrete components are an application requirement, they should be removed from the circuit during programming and debugging. Alternately, refer to the AC/DC characteristics and timing requirements information in the *"dsPIC33F Flash Programming Specification for Devices with Volatile Configuration Bits"* (DS70659) for information on capacitive loading limits and pin Input Voltage High (V_{IH}) and Input Voltage Low (V_{IL}) requirements.

Ensure that the "Communication Channel Select" (i.e., PGECx/PGEDx pins) programmed into the device matches the physical connections for the ICSP to MPLAB® ICD 3 or MPLAB REAL ICE™.

For more information on ICD 3 and REAL ICE connection requirements, refer to the following documents that are available on the Microchip web site.

- *"Using MPLAB® ICD 3"* (poster) (DS51765)
- *"MPLAB® ICD 3 Design Advisory"* (DS51764)
- *"MPLAB® REAL ICE™ In-Circuit Debugger User's Guide"* (DS51616)
- *"Using MPLAB® REAL ICE™"* (poster) (DS51749)

2.6 External Oscillator Pins

Many DSCs have options for at least two oscillators: a high-frequency primary oscillator and a low-frequency secondary oscillator (refer to **Section 8.0 "Oscillator Configuration"** for details).

The oscillator circuit should be placed on the same side of the board as the device. Also, place the oscillator circuit close to the respective oscillator pins, not exceeding one-half inch (12 mm) distance between them. The load capacitors should be placed next to the oscillator itself, on the same side of the board. Use a grounded copper pour around the oscillator circuit to isolate them from surrounding circuits. The grounded copper pour should be routed directly to the MCU ground. Do not run any signal traces or power traces inside the ground pour. Also, if using a two-sided board, avoid any traces on the other side of the board where the crystal is placed. A suggested layout is shown in Figure 2-3.

FIGURE 2-3: SUGGESTED PLACEMENT OF THE OSCILLATOR CIRCUIT

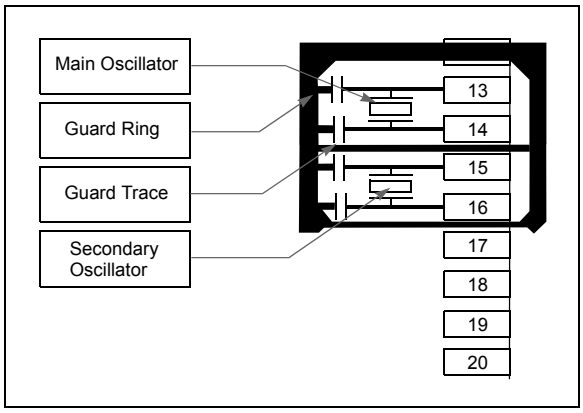

2.7 Oscillator Value Conditions on Device Start-up

If the PLL of the target device is enabled and configured for the device start-up oscillator, the maximum oscillator source frequency must be limited to 4 MHz < F_{IN} < 8 MHz (for MSPLL mode) or 3 MHz < F_{IN} < 8 MHz (for ECPLL mode) to comply with device PLL start-up conditions. HSPLL mode is not supported. This means that if the external oscillator frequency is outside this range, the application must start-up in the FRC mode first. The fixed PLL settings of 4x after a POR with an oscillator frequency outside this range will violate the device operating speed.

Once the device powers up, the application firmware can enable the PLL, and then perform a clock switch to the Oscillator + PLL clock source. Note that clock switching must be enabled in the device Configuration Word.

2.8 Configuration of Analog and Digital Pins During ICSP Operations

If MPLAB ICD 3 or MPLAB REAL ICE in-circuit emulator is selected as a debugger, it automatically initializes all of the Analog-to-Digital input pins (ANx) as “digital” pins, by setting all bits in the AD1PCFGL register.

The bits in the register that correspond to the Analog-to-Digital pins that are initialized by MPLAB ICD 3 or MPLAB REAL ICE in-circuit emulator, must not be cleared by the user application firmware; otherwise, communication errors will result between the debugger and the device.

If your application needs to use certain Analog-to-Digital pins as analog input pins during the debug session, the user application must clear the corresponding bits in the AD1PCFGL register during initialization of the ADC module.

When MPLAB ICD 3 or MPLAB REAL ICE in-circuit emulator is used as a programmer, the user application firmware must correctly configure the AD1PCFGL register. Automatic initialization of this register is only done during debugger operation. Failure to correctly configure the register(s) will result in all Analog-to-Digital pins being recognized as analog input pins, resulting in the port value being read as a logic ‘0’, which may affect user application functionality.

2.9 Unused I/Os

Unused I/O pins should be configured as outputs and driven to a logic-low state.

Alternately, connect a 1k to 10k resistor between V_{SS} and unused pins.

© 2011-2012 Microchip Technology Inc.

3.0 CPU

Note 1: This data sheet summarizes the features of the dsPIC33FJ16(GP/MC)101/102 and dsPIC33FJ32(GP/MC)101/102/104 family devices. It is not intended to be a comprehensive reference source. To complement the information in this data sheet, refer to **Section 2. "CPU"** (DS70204) in the *"dsPIC33F/PIC24H Family Reference Manual"*, which is available from the Microchip web site (www.microchip.com).

2: Some registers and associated bits described in this section may not be available on all devices. Refer to **Section 4.0 "Memory Organization"** in this data sheet for device-specific register and bit information.

The dsPIC33FJ16(GP/MC)101/102 and dsPIC33FJ32(GP/MC)101/102/104 CPU module has a 16-bit (data) modified Harvard architecture with an enhanced instruction set, including significant support for DSP. The CPU has a 24-bit instruction word with a variable length opcode field. The Program Counter (PC) is 23 bits wide and addresses up to 4M x 24 bits of user program memory space. The actual amount of program memory implemented varies by device. A single-cycle instruction prefetch mechanism is used to help maintain throughput and provides predictable execution. All instructions execute in a single cycle, with the exception of instructions that change the program flow, the double-word move (`MOV.D`) instruction and the table instructions. Overhead-free program loop constructs are supported using the `DO` and `REPEAT` instructions, both of which are interruptible at any point.

The dsPIC33FJ16(GP/MC)101/102 and dsPIC33FJ32(GP/MC)101/102/104 devices have sixteen, 16-bit working registers in the programmer's model. Each of the working registers can serve as a data, address, or address offset register. The 16th working register (W15) operates as a software Stack Pointer (SP) for interrupts and calls.

There are two classes of instruction in the dsPIC33FJ16(GP/MC)101/102 and dsPIC33FJ32(GP/MC)101/102/104 devices: MCU and DSP. These two instruction classes are seamlessly integrated into a single CPU. The instruction set includes many addressing modes and is designed for optimum C compiler efficiency. For most instructions, dsPIC33FJ16(GP/MC)101/102 and dsPIC33FJ32(GP/MC)101/102/104 devices are capable of executing a data (or program data) memory read, a working register (data) read, a data memory write, and a program (instruction) memory read per instruction cycle. As a result, three parameter instructions can be supported, allowing A + B = C operations to be executed in a single cycle.

A block diagram of the CPU is shown in Figure 3-1, and the programmer's model for the dsPIC33FJ16(GP/MC)101/102 and dsPIC33FJ32(GP/MC)101/102/104 is shown in Figure 3-2.

3.1 Data Addressing Overview

The data space can be addressed as 32K words or 64 Kbytes and is split into two blocks, referred to as X and Y data memory. Each memory block has its own independent Address Generation Unit (AGU). The MCU class of instructions operates solely through the X memory AGU, which accesses the entire memory map as one linear data space. Certain DSP instructions operate through the X and Y AGUs to support dual operand reads, which splits the data address space into two parts. The X and Y data space boundary is device-specific.

Overhead-free circular buffers (Modulo Addressing mode) are supported in both X and Y address spaces. The Modulo Addressing removes the software boundary checking overhead for DSP algorithms. Furthermore, the X AGU circular addressing can be used with any of the MCU class of instructions. The X AGU also supports Bit-Reversed Addressing to greatly simplify input or output data reordering for radix-2 FFT algorithms.

The upper 32 Kbytes of the data space memory map can optionally be mapped into program space at any 16K program word boundary defined by the 8-bit Program Space Visibility Page (PSVPAG) register. The program-to-data-space mapping feature lets any instruction access program space as if it were data space.

3.2 DSP Engine Overview

The DSP engine features a high-speed 17-bit by 17-bit multiplier, a 40-bit ALU, two 40-bit saturating accumulators, and a 40-bit bidirectional barrel shifter. The barrel shifter is capable of shifting a 40-bit value up to 16 bits right or left, in a single cycle. The DSP instructions operate seamlessly with all other instructions and have been designed for optimal real-time performance. The `MAC` instruction and other associated instructions can concurrently fetch two data operands from memory, while multiplying two W registers and accumulating and optionally saturating the result in the same cycle. This instruction functionality requires that the RAM data space be split for these instructions and linear for all others. Data space partitioning is achieved in a transparent and flexible manner through dedicating certain working registers to each address space.

3.3 Special MCU Features

The dsPIC33FJ16(GP/MC)101/102 and dsPIC33FJ32(GP/MC)101/102/104 features a 17-bit by 17-bit single-cycle multiplier that is shared by both the MCU ALU and DSP engine. The multiplier can perform signed, unsigned and mixed-sign multiplication. Using a 17-bit by 17-bit multiplier for 16-bit by 16-bit multiplication not only allows you to perform mixed-sign multiplication, it also achieves accurate results for special operations, such as (-1.0) x (-1.0).

The dsPIC33FJ16(GP/MC)101/102 and dsPIC33FJ32(GP/MC)101/102/104 supports 16/16 and 32/16 divide operations, both fractional and integer. All divide instructions are iterative operations. They must be executed within a `REPEAT` loop, resulting in a total execution time of 19 instruction cycles. The divide operation can be interrupted during any of those 19 cycles without loss of data.

A 40-bit barrel shifter is used to perform up to a 16-bit left or right shift in a single cycle. The barrel shifter can be used by both MCU and DSP instructions.

FIGURE 3-1: dsPIC33FJ16(GP/MC)101/102 AND dsPIC33FJ32(GP/MC)101/102/104 CPU CORE BLOCK DIAGRAM

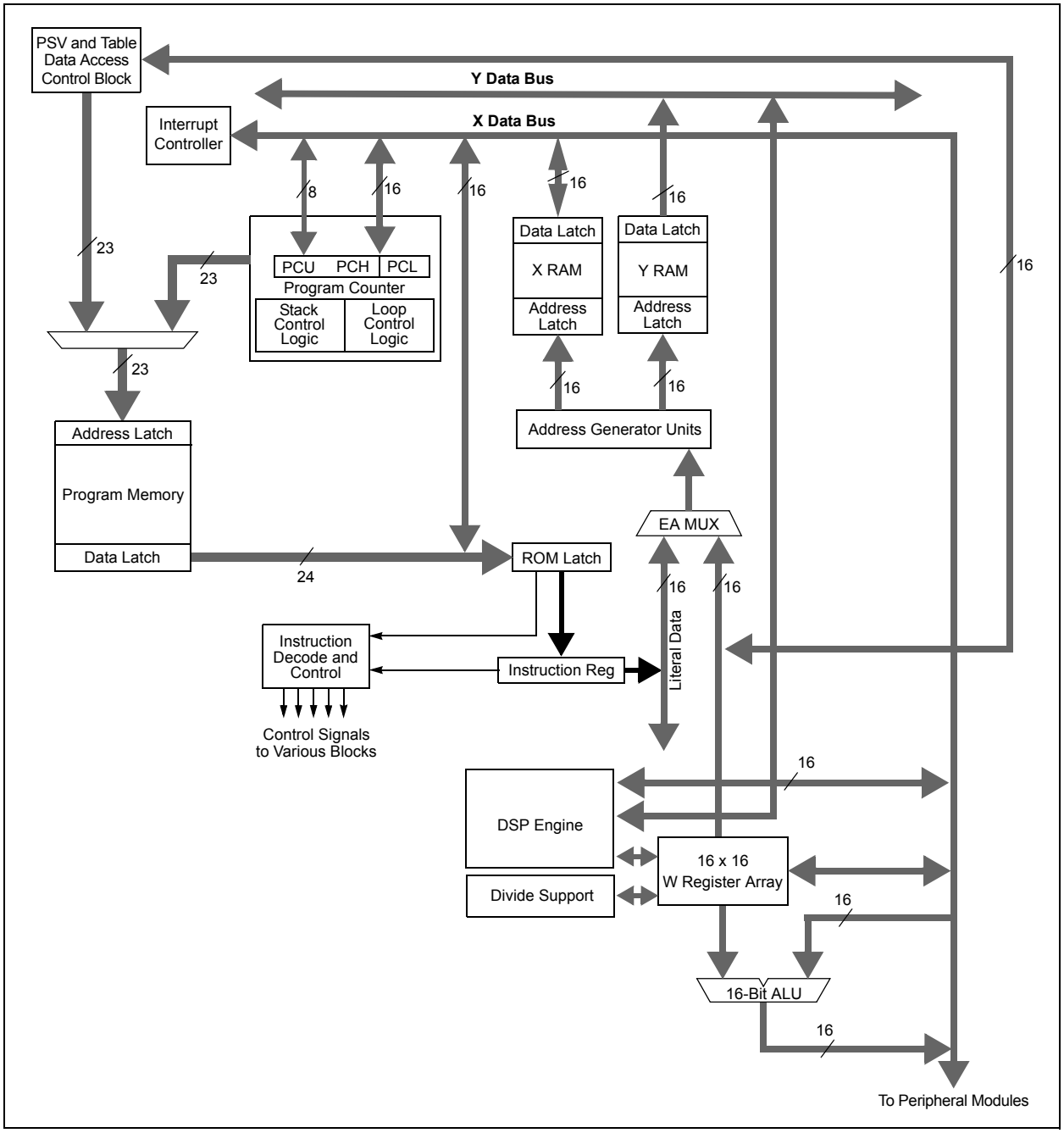

© 2011-2012 Microchip Technology Inc.

FIGURE 3-2: dsPIC33FJ16(GP/MC)101/102 AND dsPIC33FJ32(GP/MC)101/102/104 PROGRAMMER'S MODEL

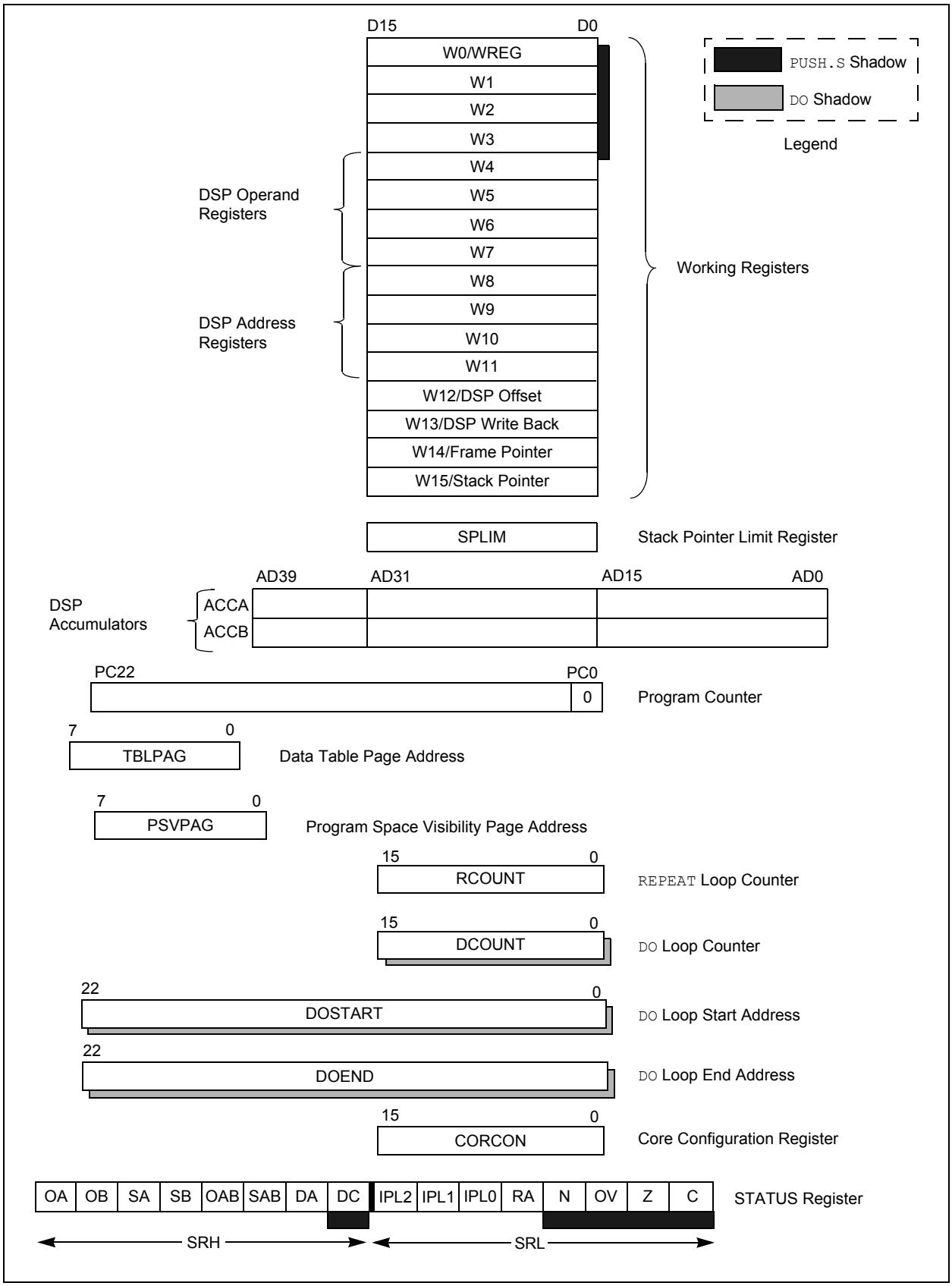

3.4 CPU Control Registers

REGISTER 3-1: SR: CPU STATUS REGISTER

R-0	R-0	R/C-0	R/C-0	R-0	R/C-0	R-0	R/W-0
OA	OB	SA(1)	SB(1)	OAB	SAB	DA	DC
bit 15							bit 8

R/W-0(3)	R/W-0(3)	R/W-0(3)	R-0	R/W-0	R/W-0	R/W-0	R/W-0
IPL<2:0>(2)			RA	N	OV	Z	C
bit 7							bit 0

Legend:	C = Clearable bit		
R = Readable bit	W = Writable bit	U = Unimplemented bit, read as ‘0’	
-n = Value at POR	‘1’ = Bit is set	‘0’ = Bit is cleared	x = Bit is unknown

bit 15 **OA:** Accumulator A Overflow Status bit
1 = Accumulator A overflowed
0 = Accumulator A has not overflowed

bit 14 **OB:** Accumulator B Overflow Status bit
1 = Accumulator B overflowed
0 = Accumulator B has not overflowed

bit 13 **SA:** Accumulator A Saturation ‘Sticky’ Status bit(1)
1 = Accumulator A is saturated or has been saturated at some time
0 = Accumulator A is not saturated

bit 12 **SB:** Accumulator B Saturation ‘Sticky’ Status bit(1)
1 = Accumulator B is saturated or has been saturated at some time
0 = Accumulator B is not saturated

bit 11 **OAB:** OA || OB Combined Accumulator Overflow Status bit
1 = Accumulators A or B have overflowed
0 = Neither Accumulators A or B have overflowed

bit 10 **SAB:** SA || SB Combined Accumulator ‘Sticky’ Status bit
1 = Accumulators A or B are saturated or have been saturated at some time in the past
0 = Neither Accumulator A or B are saturated
This bit may be read or cleared (not set). *Clearing this bit will clear SA and SB*.

bit 9 **DA:** DO Loop Active bit
1 = DO loop in progress
0 = DO loop not in progress

bit 8 **DC:** MCU ALU Half Carry/$\overline{\text{Borrow}}$ bit
1 = A carry-out from the 4th low-order bit (for byte-sized data) or 8th low-order bit (for word-sized data) of the result occurred
0 = No carry-out from the 4th low-order bit (for byte-sized data) or 8th low-order bit (for word-sized data) of the result occurred

Note 1: This bit can be read or cleared (not set).
2: The IPL<2:0> bits are concatenated with the IPL<3> bit (CORCON<3>) to form the CPU Interrupt Priority Level. The value in parentheses indicates the IPL if IPL<3> = 1. User interrupts are disabled when IPL<3> = 1.
3: The IPL<2:0> Status bits are read-only when NSTDIS = 1 (INTCON1<15>).

© 2011-2012 Microchip Technology Inc.

REGISTER 3-1: SR: CPU STATUS REGISTER (CONTINUED)

bit 7-5 **IPL<2:0>:** CPU Interrupt Priority Level Status bits(2,3)

111 = CPU Interrupt Priority Level is 7 (15), user interrupts are disabled
110 = CPU Interrupt Priority Level is 6 (14)
101 = CPU Interrupt Priority Level is 5 (13)
100 = CPU Interrupt Priority Level is 4 (12)
011 = CPU Interrupt Priority Level is 3 (11)
010 = CPU Interrupt Priority Level is 2 (10)
001 = CPU Interrupt Priority Level is 1 (9)
000 = CPU Interrupt Priority Level is 0 (8)

bit 4 **RA:** REPEAT Loop Active bit

1 = REPEAT loop in progress
0 = REPEAT loop not in progress

bit 3 **N:** MCU ALU Negative bit

1 = Result was negative
0 = Result was non-negative (zero or positive)

bit 2 **OV:** MCU ALU Overflow bit

This bit is used for signed arithmetic (2's complement). It indicates an overflow of a magnitude that causes the sign bit to change state.
1 = Overflow occurred for signed arithmetic (in this arithmetic operation)
0 = No overflow occurred

bit 1 **Z:** MCU ALU Zero bit

1 = An operation that affects the Z bit has set it at some time in the past
0 = The most recent operation that affects the Z bit has cleared it (i.e., a non-zero result)

bit 0 **C:** MCU ALU Carry/$\overline{\text{Borrow}}$ bit

1 = A carry-out from the Most Significant bit of the result occurred
0 = No carry-out from the Most Significant bit of the result occurred

Note 1: This bit can be read or cleared (not set).

2: The IPL<2:0> bits are concatenated with the IPL<3> bit (CORCON<3>) to form the CPU Interrupt Priority Level. The value in parentheses indicates the IPL if IPL<3> = 1. User interrupts are disabled when IPL<3> = 1.

3: The IPL<2:0> Status bits are read-only when NSTDIS = 1 (INTCON1<15>).

REGISTER 3-2: CORCON: CORE CONTROL REGISTER

U-0	U-0	U-0	R/W-0	R/W-0	R-0	R-0	R-0
—	—	—	US	EDT[1]	DL<2:0>		
bit 15							bit 8

R/W-0	R/W-0	R/W-1	R/W-0	R/C-0	R/W-0	R/W-0	R/W-0
SATA	SATB	SATDW	ACCSAT	IPL3[2]	PSV	RND	IF
bit 7							bit 0

Legend:	C = Clearable bit		
R = Readable bit	W = Writable bit	-n = Value at POR	‘1’ = Bit is set
0’ = Bit is cleared	‘x = Bit is unknown	U = Unimplemented bit, read as ‘0’	

bit 15-13 **Unimplemented:** Read as ‘0’

bit 12 **US:** DSP Multiply Unsigned/Signed Control bit
1 = DSP engine multiplies are unsigned
0 = DSP engine multiplies are signed

bit 11 **EDT:** Early DO Loop Termination Control bit[1]
1 = Terminates executing DO loop at end of current loop iteration
0 = No effect

bit 10-8 **DL<2:0>:** DO Loop Nesting Level Status bits
111 = 7 DO loops are active
•
•
•
001 = 1 DO loop is active
000 = 0 DO loops is active

bit 7 **SATA:** ACCA Saturation Enable bit
1 = Accumulator A saturation is enabled
0 = Accumulator A saturation is disabled

bit 6 **SATB:** ACCB Saturation Enable bit
1 = Accumulator B saturation is enabled
0 = Accumulator B saturation is disabled

bit 5 **SATDW:** Data Space Write from DSP Engine Saturation Enable bit
1 = Data space write saturation is enabled
0 = Data space write saturation is disabled

bit 4 **ACCSAT:** Accumulator Saturation Mode Select bit
1 = 9.31 saturation (super saturation)
0 = 1.31 saturation (normal saturation)

bit 3 **IPL3:** CPU Interrupt Priority Level Status bit 3[2]
1 = CPU Interrupt Priority Level is greater than 7
0 = CPU Interrupt Priority Level is 7 or less

bit 2 **PSV:** Program Space Visibility in Data Space Enable bit
1 = Program space is visible in data space
0 = Program space is not visible in data space

bit 1 **RND:** Rounding Mode Select bit
1 = Biased (conventional) rounding is enabled
0 = Unbiased (convergent) rounding is enabled

bit 0 **IF:** Integer or Fractional Multiplier Mode Select bit
1 = Integer mode is enabled for DSP multiply ops
0 = Fractional mode is enabled for DSP multiply ops

Note 1: This bit will always read as ‘0’.
2: The IPL3 bit is concatenated with the IPL<2:0> bits (SR<7:5>) to form the CPU Interrupt Priority Level.

© 2011-2012 Microchip Technology Inc.

3.5 Arithmetic Logic Unit (ALU)

The dsPIC33FJ16(GP/MC)101/102 and dsPIC33FJ32(GP/MC)101/102/104 ALU is 16 bits wide and is capable of addition, subtraction, bit shifts, and logic operations. Unless otherwise mentioned, arithmetic operations are 2's complement in nature. Depending on the operation, the ALU can affect the values of the Carry (C), Zero (Z), Negative (N), Overflow (OV), and Digit Carry (DC) Status bits in the SR register. The C and DC Status bits operate as Borrow and Digit Borrow bits, respectively, for subtraction operations.

The ALU can perform 8-bit or 16-bit operations, depending on the mode of the instruction that is used. Data for the ALU operation can come from the W register array or data memory, depending on the addressing mode of the instruction. Likewise, output data from the ALU can be written to the W register array or a data memory location.

Refer to the *"16-Bit MCU and DSC Programmer's Reference Manual"* (DS70157) for information on the SR bits affected by each instruction.

The dsPIC33FJ16(GP/MC)101/102 and dsPIC33FJ32(GP/MC)101/102/104 CPU incorporates hardware support for both multiplication and division. This includes a dedicated hardware multiplier and support hardware for 16-bit-divisor division.

3.5.1 MULTIPLIER

Using the high-speed 17-bit x 17-bit multiplier of the DSP engine, the ALU supports unsigned, signed or mixed-sign operation in several MCU multiplication modes:

- 16-bit x 16-bit signed
- 16-bit x 16-bit unsigned
- 16-bit signed x 5-bit (literal) unsigned
- 16-bit unsigned x 16-bit unsigned
- 16-bit unsigned x 5-bit (literal) unsigned
- 16-bit unsigned x 16-bit signed
- 8-bit unsigned x 8-bit unsigned

3.5.2 DIVIDER

The divide block supports 32-bit/16-bit and 16-bit/16-bit signed and unsigned integer divide operations with the following data sizes:

- 32-bit signed/16-bit signed divide
- 32-bit unsigned/16-bit unsigned divide
- 16-bit signed/16-bit signed divide
- 16-bit unsigned/16-bit unsigned divide

The quotient for all divide instructions ends up in W0 and the remainder in W1. The 16-bit signed and unsigned `DIV` instructions can specify any W register for both the 16-bit divisor (Wn) and any W register (aligned) pair (W(m + 1):Wm) for the 32-bit dividend. The divide algorithm takes one cycle per bit of divisor, so both 32-bit/16-bit and 16-bit/16-bit instructions take the same number of cycles to execute.

3.6 DSP Engine

The DSP engine consists of a high-speed 17-bit x 17-bit multiplier, a barrel shifter and a 40-bit adder/subtracter (with two target accumulators, round and saturation logic).

The dsPIC33FJ16(GP/MC)101/102 and dsPIC33FJ32(GP/MC)101/102/104 is a single-cycle instruction flow architecture; therefore, concurrent operation of the DSP engine with MCU instruction flow is not possible. However, some MCU ALU and DSP engine resources can be used concurrently by the same instruction (e.g., `ED`, `EDAC`).

The DSP engine can also perform inherent accumulator-to-accumulator operations that require no additional data. These instructions are `ADD`, `SUB`, and `NEG`.

The DSP engine has options selected through bits in the CPU Core Control register (CORCON), as listed below:

- Fractional or Integer DSP Multiply (IF)
- Signed or Unsigned DSP Multiply (US)
- Conventional or Convergent Rounding (RND)
- Automatic Saturation On/Off for ACCA (SATA)
- Automatic Saturation On/Off for ACCB (SATB)
- Automatic Saturation On/Off for Writes to Data Memory (SATDW)
- Accumulator Saturation mode Selection (ACCSAT)

A block diagram of the DSP engine is shown in Figure 3-3.

TABLE 3-1: DSP INSTRUCTIONS SUMMARY

Instruction	Algebraic Operation	ACC Write Back
`CLR`	$A = 0$	Yes
`ED`	$A = (x - y)^2$	No
`EDAC`	$A = A + (x - y)^2$	No
`MAC`	$A = A + (x * y)$	Yes
`MAC`	$A = A + x^2$	No
`MOVSAC`	No change in A	Yes
`MPY`	$A = x * y$	No
`MPY`	$A = x^2$	No
`MPY.N`	$A = -x * y$	No
`MSC`	$A = A - x * y$	Yes

FIGURE 3-3: DSP ENGINE BLOCK DIAGRAM

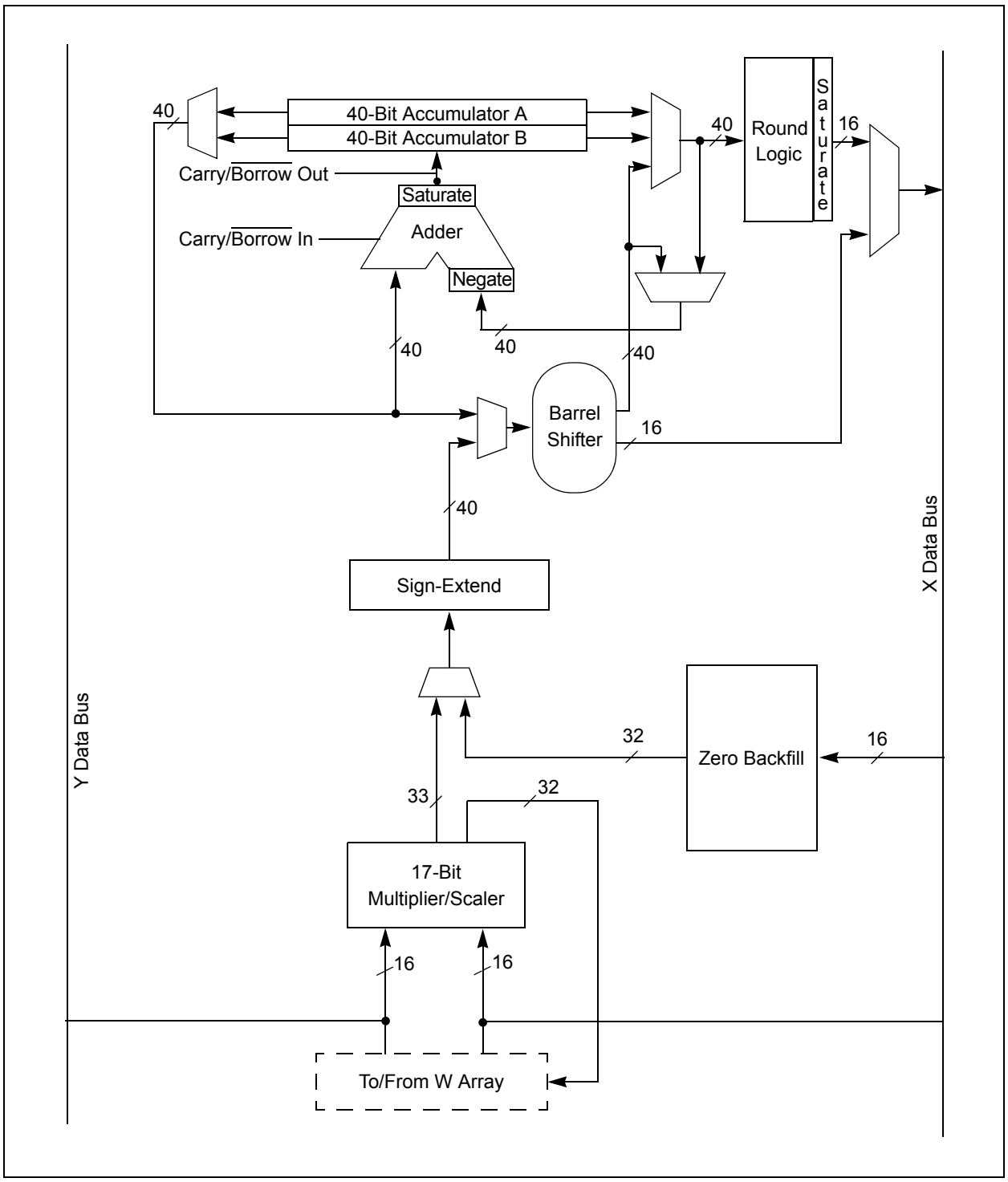

© 2011-2012 Microchip Technology Inc.

3.6.1 MULTIPLIER

The 17-bit x 17-bit multiplier is capable of signed or unsigned operation and can multiplex its output using a scaler to support either 1.31 fractional (Q31) or 32-bit integer results. Unsigned operands are zero-extended into the 17th bit of the multiplier input value. Signed operands are sign-extended into the 17th bit of the multiplier input value. The output of the 17-bit x 17-bit multiplier/scaler is a 33-bit value that is sign-extended to 40 bits. Integer data is inherently represented as a signed 2's complement value, where the Most Significant bit (MSb) is defined as a sign bit. The range of an N-bit 2's complement integer is -2^{N-1} to $2^{N-1} – 1$.

- For a 16-bit integer, the data range is -32768 (0x8000) to 32767 (0x7FFF) including 0.
- For a 32-bit integer, the data range is -2,147,483,648 (0x8000 0000) to 2,147,483,647 (0x7FFF FFFF).

When the multiplier is configured for fractional multiplication, the data is represented as a 2's complement fraction, where the MSb is defined as a sign bit and the radix point is implied to lie just after the sign bit (QX format). The range of an N-bit 2's complement fraction with this implied radix point is -1.0 to $(1 – 2^{1-N})$. For a 16-bit fraction, the Q15 data range is -1.0 (0x8000) to 0.999969482 (0x7FFF) including 0 and has a precision of 3.01518×10^{-5}. In Fractional mode, the 16 x 16 multiply operation generates a 1.31 product that has a precision of 4.65661×10^{-10}.

The same multiplier is used to support the MCU multiply instructions, which include integer 16-bit signed, unsigned and mixed sign multiply operations.

The `MUL` instruction can be directed to use byte or word-sized operands. Byte operands will direct a 16-bit result, and word operands will direct a 32-bit result to the specified register(s) in the W array.

3.6.2 DATA ACCUMULATORS AND ADDER/SUBTRACTER

The data accumulator consists of a 40-bit adder/subtracter with automatic sign extension logic. It can select one of two accumulators (A or B) as its pre-accumulation source and post-accumulation destination. For the `ADD` and `LAC` instructions, the data to be accumulated or loaded can be optionally scaled using the barrel shifter prior to accumulation.

3.6.2.1 Adder/Subtracter, Overflow and Saturation

The adder/subtracter is a 40-bit adder with an optional zero input into one side, and either true or complement data into the other input.

- In the case of addition, the Carry/$\overline{\text{Borrow}}$ input is active-high and the other input is true data (not complemented).
- In the case of subtraction, the Carry/$\overline{\text{Borrow}}$ input is active-low and the other input is complemented.

The adder/subtracter generates Overflow Status bits, SA/SB and OA/OB, which are latched and reflected in the STATUS register:

- Overflow from bit 39: this is a catastrophic overflow in which the sign of the accumulator is destroyed.
- Overflow into guard bits 32 through 39: this is a recoverable overflow. This bit is set whenever all the guard bits are not identical to each other.

The adder has an additional saturation block that controls accumulator data saturation, if selected. It uses the result of the adder, the Overflow Status bits described previously, and the SAT<A:B> (CORCON<7:6>) and ACCSAT (CORCON<4>) mode control bits to determine when and to what value, to saturate.

Six STATUS register bits support saturation and overflow:

- OA: ACCA overflowed into guard bits
- OB: ACCB overflowed into guard bits
- SA: ACCA saturated (bit 31 overflow and saturation)

  or

  ACCA overflowed into guard bits and saturated (bit 39 overflow and saturation)
- SB: ACCB saturated (bit 31 overflow and saturation)

  or

  ACCB overflowed into guard bits and saturated (bit 39 overflow and saturation)
- OAB: Logical OR of OA and OB
- SAB: Logical OR of SA and SB

The OA and OB bits are modified each time data passes through the adder/subtracter. When set, they indicate that the most recent operation has overflowed into the accumulator guard bits (bits 32 through 39). The OA and OB bits can also optionally generate an arithmetic warning trap when OA and OB are set and the corresponding Overflow Trap Flag Enable bits (OVATE, OVBTE) in the INTCON1 register are set (refer to **Section 7.0 "Interrupt Controller"**). This allows the user application to take immediate action; for example, to correct system gain.

The SA and SB bits are modified each time data passes through the adder/subtracter, but can only be cleared by the user application. When set, they indicate that the accumulator has overflowed its maximum range (bit 31 for 32-bit saturation or bit 39 for 40-bit saturation) and will be saturated (if saturation is enabled). When saturation is not enabled, SA and SB default to bit 39 overflow, and therefore, indicate that a catastrophic overflow has occurred. If the COVTE bit in the INTCON1 register is set, the SA and SB bits will generate an arithmetic warning trap when saturation is disabled.

The Overflow and Saturation Status bits can optionally be viewed in the STATUS Register (SR) as the logical OR of OA and OB (in bit OAB) and the logical OR of SA and SB (in bit SAB). Programmers can check one bit in the STATUS register to determine whether either accumulator has overflowed, or one bit to determine whether either accumulator has saturated. This is useful for complex number arithmetic, which typically uses both accumulators.

The device supports three Saturation and Overflow modes:

- Bit 39 Overflow and Saturation:
  When bit 39 overflow and saturation occurs, the saturation logic loads the maximally positive 9.31 value (0x7FFFFFFFFF) or maximally negative 9.31 value (0x8000000000) into the target accumulator. The SA or SB bit is set and remains set until cleared by the user application. This condition is referred to as ‘super saturation’ and provides protection against erroneous data or unexpected algorithm problems (such as gain calculations).
- Bit 31 Overflow and Saturation:
  When bit 31 overflow and saturation occurs, the saturation logic then loads the maximally positive 1.31 value (0x007FFFFFFF) or maximally negative 1.31 value (0x0080000000) into the target accumulator. The SA or SB bit is set and remains set until cleared by the user application. When this Saturation mode is in effect, the guard bits are not used, so the OA, OB or OAB bits are never set.
- Bit 39 Catastrophic Overflow:
  The bit 39 Overflow Status bit from the adder is used to set the SA or SB bit, which remains set until cleared by the user application. No saturation operation is performed, and the accumulator is allowed to overflow, destroying its sign. If the COVTE bit in the INTCON1 register is set, a catastrophic overflow can initiate a trap exception.

3.6.3 ACCUMULATOR ‘WRITE BACK’

The `MAC` class of instructions (with the exception of `MPY`, `MPY.N`, `ED`, and `EDAC`) can optionally write a rounded version of the high word (bits 31 through 16) of the accumulator which is not targeted by the instruction into data space memory. The write is performed across the X bus into combined X and Y address space. The following addressing modes are supported:

- W13, Register Direct:
  The rounded contents of the non-target accumulator are written into W13 as a 1.15 fraction.
- [W13] + = 2, Register Indirect with Post-Increment:
  The rounded contents of the non-target accumulator are written into the address pointed to by W13 as a 1.15 fraction. W13 is then incremented by 2 (for a word write).

3.6.3.1 Round Logic

The round logic is a combinational block that performs a conventional (biased) or convergent (unbiased) round function during an accumulator write (store). The Round mode is determined by the state of the RND bit in the CORCON register. It generates a 16-bit, 1.15 data value that is passed to the data space write saturation logic. If rounding is not indicated by the instruction, a truncated 1.15 data value is stored and the least significant word (lsw) is simply discarded.

Conventional rounding will zero-extend bit 15 of the accumulator and will add it to the ACCxH word (bits 16 through 31 of the accumulator).

- If the ACCxL word (bits 0 through 15 of the accumulator) is between 0x8000 and 0xFFFF (0x8000 included), ACCxH is incremented.
- If ACCxL is between 0x0000 and 0x7FFF, ACCxH is left unchanged.

A consequence of this algorithm is that over a succession of random rounding operations, the value tends to be biased slightly positive.

Convergent (or unbiased) rounding operates in the same manner as conventional rounding, except when ACCxL equals 0x8000. In this case, the Least Significant bit (LSb), bit 16 of the accumulator, of ACCxH is examined:

- If it is ‘`1`’, ACCxH is incremented.
- If it is ‘`0`’, ACCxH is not modified.

Assuming that bit 16 is effectively random in nature, this scheme removes any rounding bias that may accumulate.

© 2011-2012 Microchip Technology Inc.

The SAC and SAC.R instructions store either a truncated (SAC), or rounded (SAC.R) version of the contents of the target accumulator to data memory via the X bus, subject to data saturation (see **Section 3.6.3.2 "Data Space Write Saturation"**). For the MAC class of instructions, the accumulator write-back operation functions in the same manner, addressing combined MCU (X and Y) data space though the X bus. For this class of instructions, the data is always subject to rounding.

3.6.3.2 Data Space Write Saturation

In addition to adder/subtracter saturation, writes to data space can also be saturated, but without affecting the contents of the source accumulator. The data space write saturation logic block accepts a 16-bit, 1.15 fractional value from the round logic block as its input, together with overflow status from the original source (accumulator) and the 16-bit round adder. These inputs are combined and used to select the appropriate 1.15 fractional value as output to write to data space memory.

If the SATDW bit in the CORCON register is set, data (after rounding or truncation) is tested for overflow and adjusted accordingly:

- For input data greater than 0x007FFF, data written to memory is forced to the maximum positive 1.15 value, 0x7FFF.
- For input data less than 0xFF8000, data written to memory is forced to the maximum negative 1.15 value, 0x8000.

The MSb of the source (bit 39) is used to determine the sign of the operand being tested.

If the SATDW bit in the CORCON register is not set, the input data is always passed through unmodified under all conditions.

3.6.4 BARREL SHIFTER

The barrel shifter can perform up to 16-bit arithmetic or logic right shifts, or up to 16-bit left shifts, in a single cycle. The source can be either of the two DSP accumulators or the X bus (to support multi-bit shifts of register or memory data).

The shifter requires a signed binary value to determine both the magnitude (number of bits) and direction of the shift operation. A positive value shifts the operand right. A negative value shifts the operand left. A value of '0' does not modify the operand.

The barrel shifter is 40 bits wide, thereby obtaining a 40-bit result for DSP shift operations and a 16-bit result for MCU shift operations. Data from the X bus is presented to the barrel shifter between Bit Positions 16 and 31 for right shifts, and between Bit Positions 0 and 16 for left shifts.

NOTES:

© 2011-2012 Microchip Technology Inc.

4.0 MEMORY ORGANIZATION

Note: This data sheet summarizes the features of the dsPIC33FJ16(GP/MC)101/102 and dsPIC33FJ32(GP/MC)101/102/104 family devices. However, it is not intended to be a comprehensive reference source. To complement the information in this data sheet, refer to **Section 3. "Data Memory"** (DS70202) and **Section 4. "Program Memory"** (DS70203) in the *"dsPIC33F/PIC24H Family Reference Manual"*, which are available from the Microchip web site (www.microchip.com).

The device architecture features separate program and data memory spaces and buses. This architecture also allows the direct access of program memory from the data space during code execution.

4.1 Program Address Space

The program address memory space of the dsPIC33FJ16(GP/MC)101/102 and dsPIC33FJ32(GP/MC)101/102/104 devices is 4M instructions. The space is addressable by a 24-bit value derived either from the 23-bit Program Counter (PC) during program execution, or from table operation or data space remapping as described in **Section 4.6 "Interfacing Program and Data Memory Spaces"**.

User application access to the program memory space is restricted to the lower half of the address range (0x000000 to 0x7FFFFF). The exception is the use of `TBLRD/TBLWT` operations, which use TBLPAG<7> to permit access to the Configuration bits and Device ID sections of the configuration memory space.

The memory maps for the dsPIC33FJ16(GP/MC)101/102 and dsPIC33FJ32(GP/MC)101/102/104 family of devices re shown in Figure 4-1 and Figure 4-2.

FIGURE 4-1: PROGRAM MEMORY MAP FOR dsPIC33FJ16(GP/MC)101/102 DEVICES

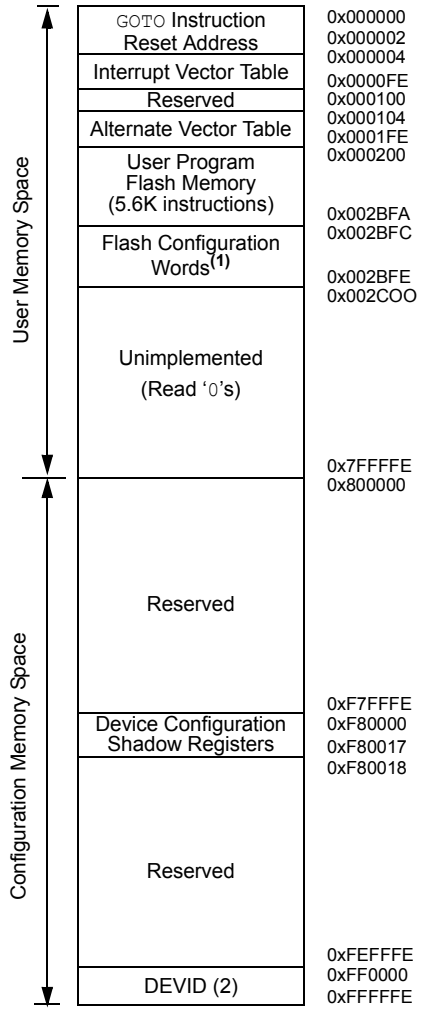

Note 1: On Reset, these bits are automatically copied into the device Configuration Shadow registers.

FIGURE 4-2: PROGRAM MEMORY MAP FOR dsPIC33FJ32(GP/MC)101/102/104 DEVICES

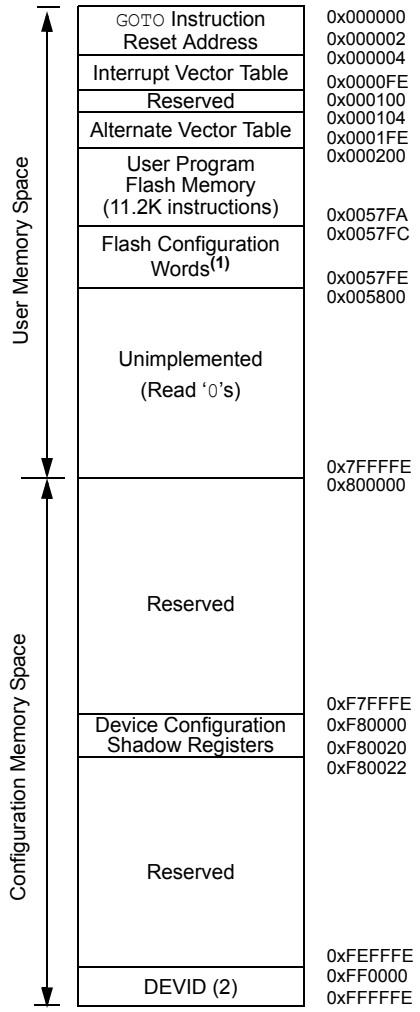

Note 1: On Reset, these bits are automatically copied into the device Configuration Shadow registers.

© 2011-2012 Microchip Technology Inc.

4.1.1 PROGRAM MEMORY ORGANIZATION

The program memory space is organized in word-addressable blocks. Although it is treated as 24 bits wide, it is more appropriate to think of each address of the program memory as a lower and upper word, with the upper byte of the upper word being unimplemented. The lower word always has an even address, while the upper word has an odd address (Figure 4-3).

Program memory addresses are always word-aligned on the lower word, and addresses are incremented or decremented by two during code execution. This arrangement provides compatibility with data memory space addressing and makes data in the program memory space accessible.

4.1.2 INTERRUPT AND TRAP VECTORS

All dsPIC33FJ16(GP/MC)101/102 and dsPIC33FJ32(GP/MC)101/102/104 devices reserve the addresses between 0x00000 and 0x000200 for hard-coded program execution vectors. A hardware Reset vector is provided to redirect code execution from the default value of the PC on device Reset to the actual start of code. A `GOTO` instruction is programmed by the user application at 0x000000, with the actual address for the start of code at 0x000002.

dsPIC33FJ16(GP/MC)101/102 and dsPIC33FJ32(GP/MC)101/102/104 devices also have two Interrupt Vector Tables (IVTs), located from 0x000004 to 0x0000FF and 0x000100 to 0x0001FF. These vector tables allow each of the device interrupt sources to be handled by separate Interrupt Service Routines (ISRs). A more detailed discussion of the Interrupt Vector Tables is provided in **Section 7.1 "Interrupt Vector Table"**.

FIGURE 4-3: PROGRAM MEMORY ORGANIZATION

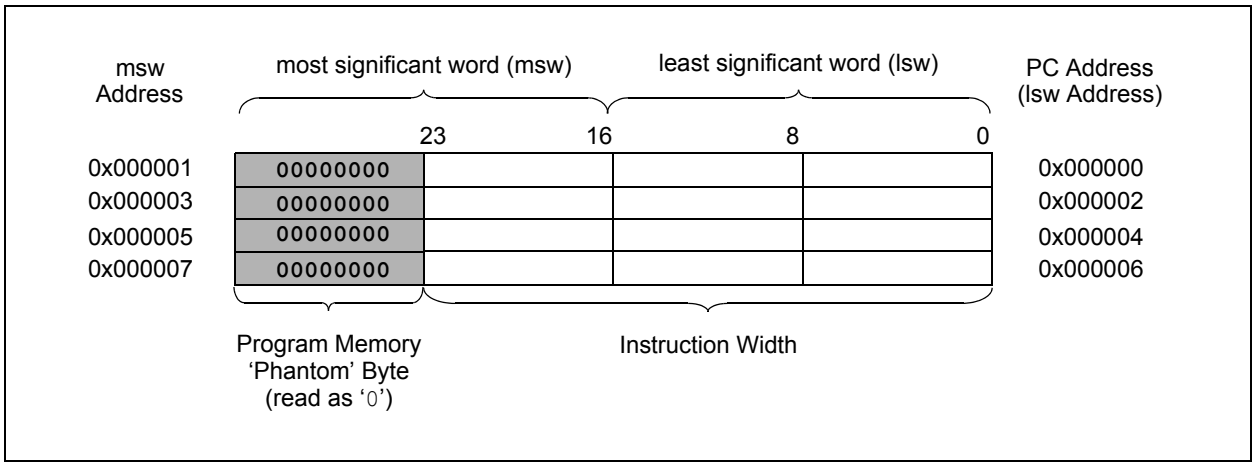

4.2 Data Address Space

The dsPIC33FJ16(GP/MC)101/102 and dsPIC33FJ32(GP/MC)101/102/104 CPU has a separate 16-bit-wide data memory space. The data space is accessed using separate Address Generation Units (AGUs) for read and write operations. The data memory maps is shown in Figure 4-4.

All Effective Addresses (EAs) in the data memory space are 16 bits wide and point to bytes within the data space. This arrangement gives a data space address range of 64 Kbytes or 32K words. The lower half of the data memory space (that is, when EA<15> = 0) is used for implemented memory addresses, while the upper half (EA<15> = 1) is reserved for the Program Space Visibility area (see **Section 4.6.3 "Reading Data from Program Memory Using Program Space Visibility"**).

Microchip dsPIC33FJ16(GP/MC)101/102 and dsPIC33FJ32(GP/MC)101/102/104 devices implement up to 2 Kbytes of data memory. Should an EA point to a location outside of this area, an all-zero word or byte will be returned.

4.2.1 DATA SPACE WIDTH

The data memory space is organized in byte-addressable, 16-bit wide blocks. Data is aligned in data memory and registers as 16-bit words, but all data space EAs resolve to bytes. The Least Significant Bytes (LSBs) of each word have even addresses, while the Most Significant Bytes (MSBs) have odd addresses.

4.2.2 DATA MEMORY ORGANIZATION AND ALIGNMENT

To maintain backward compatibility with PIC® MCU devices and improve data space memory usage efficiency, the dsPIC33FJ16(GP/MC)101/102 and dsPIC33FJ32(GP/MC)101/102/104 instruction set supports both word and byte operations. As a consequence of byte accessibility, all Effective Address calculations are internally scaled to step through word-aligned memory. For example, the core recognizes that Post-Modified Register Indirect Addressing mode [Ws++] will result in a value of Ws + 1 for byte operations and Ws + 2 for word operations.

Data byte reads will read the complete word that contains the byte, using the LSB of any EA to determine which byte to select. The selected byte is placed onto the LSB of the data path. That is, data memory and registers are organized as two parallel byte-wide entities with shared (word) address decoding but separate write lines. Data byte writes only write to the corresponding side of the array or register that matches the byte address.

All word accesses must be aligned to an even address. Misaligned word data fetches are not supported, so care must be taken when mixing byte and word operations, or translating from 8-bit MCU code. If a misaligned read or write is attempted, an address error trap is generated. If the error occurred on a read, the instruction in progress is completed. If the error occurred on a write, the instruction is executed but the write does not occur. In either case, a trap is then executed, allowing the system and/or user application to examine the machine state prior to execution of the address Fault.

All byte loads into any W register are loaded into the LSB. The MSB is not modified.

A sign-extend instruction (SE) is provided to allow user applications to translate 8-bit signed data to 16-bit signed values. Alternately, for 16-bit unsigned data, user applications can clear the MSB of any W register by executing a Zero-Extend (ZE) instruction on the appropriate address.

4.2.3 SFR SPACE

The first 2 Kbytes of the Near Data Space, from 0x0000 to 0x07FF, is primarily occupied by Special Function Registers (SFRs). These are used by the dsPIC33FJ16(GP/MC)101/102 and dsPIC33FJ32(GP/MC)101/102/104 core and peripheral modules for controlling the operation of the device.

SFRs are distributed among the modules that they control, and are generally grouped together by module. Much of the SFR space contains unused addresses; these are read as '0'.

Note:	The actual set of peripheral features and interrupts varies by the device. Refer to the corresponding device tables and pinout diagrams for device-specific information.

4.2.4 NEAR DATA SPACE

The 8-Kbyte area between 0x0000 and 0x1FFF is referred to as the near data space. Locations in this space are directly addressable via a 13-bit absolute address field within all memory direct instructions. Additionally, the whole data space is addressable using MOV class of instructions, which support Memory Direct Addressing mode with a 16-bit address field, or by using Indirect Addressing mode with a working register as an Address Pointer.

© 2011-2012 Microchip Technology Inc.

FIGURE 4-4: DATA MEMORY MAP FOR dsPIC33FJ16(GP/MC)101/102 DEVICES WITH 1-KBYTE RAM

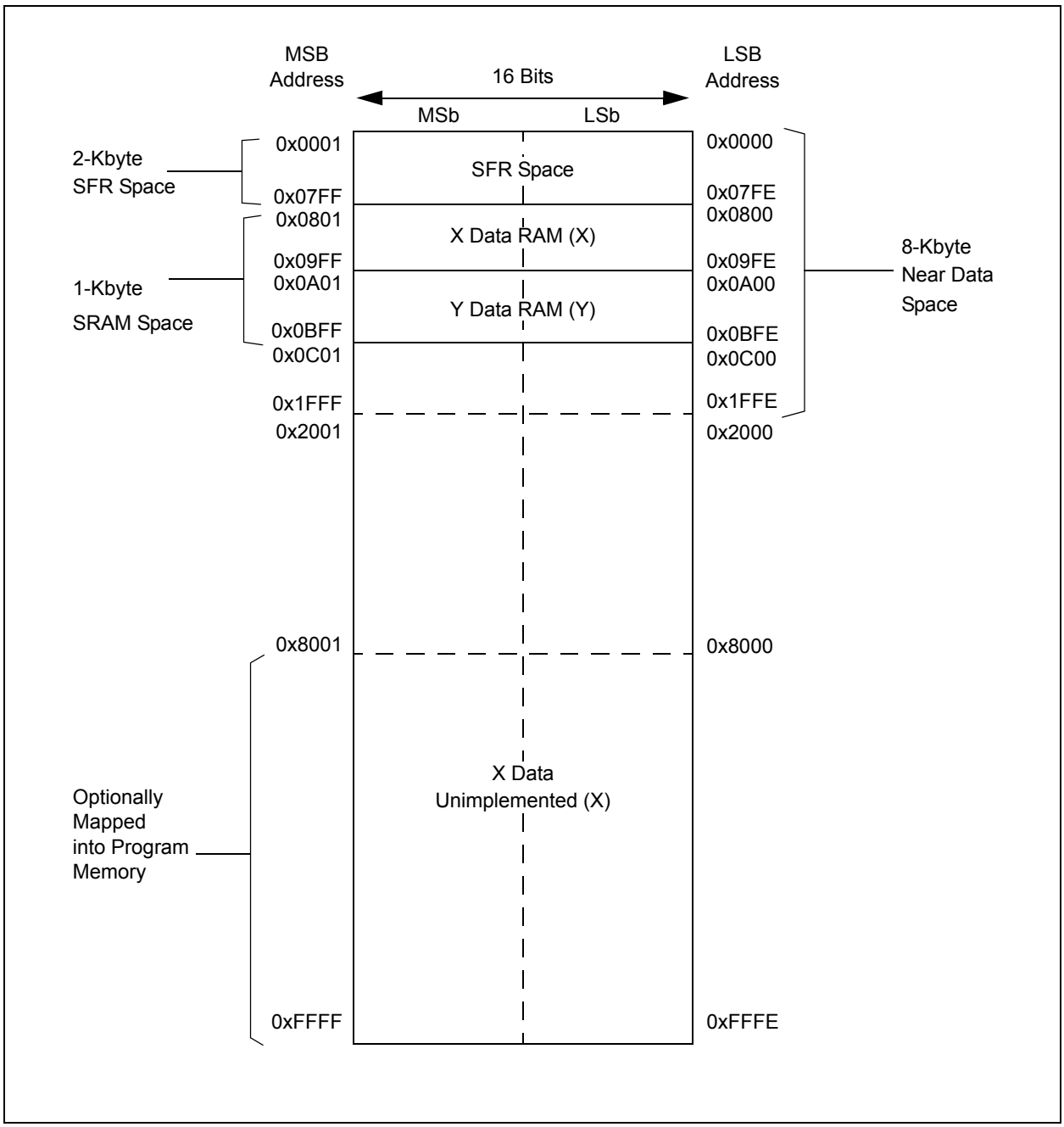

FIGURE 4-5: DATA MEMORY MAP FOR dsPIC33FJ32(GP/MC)101/102/104 DEVICES WITH 2-KBYTE RAM

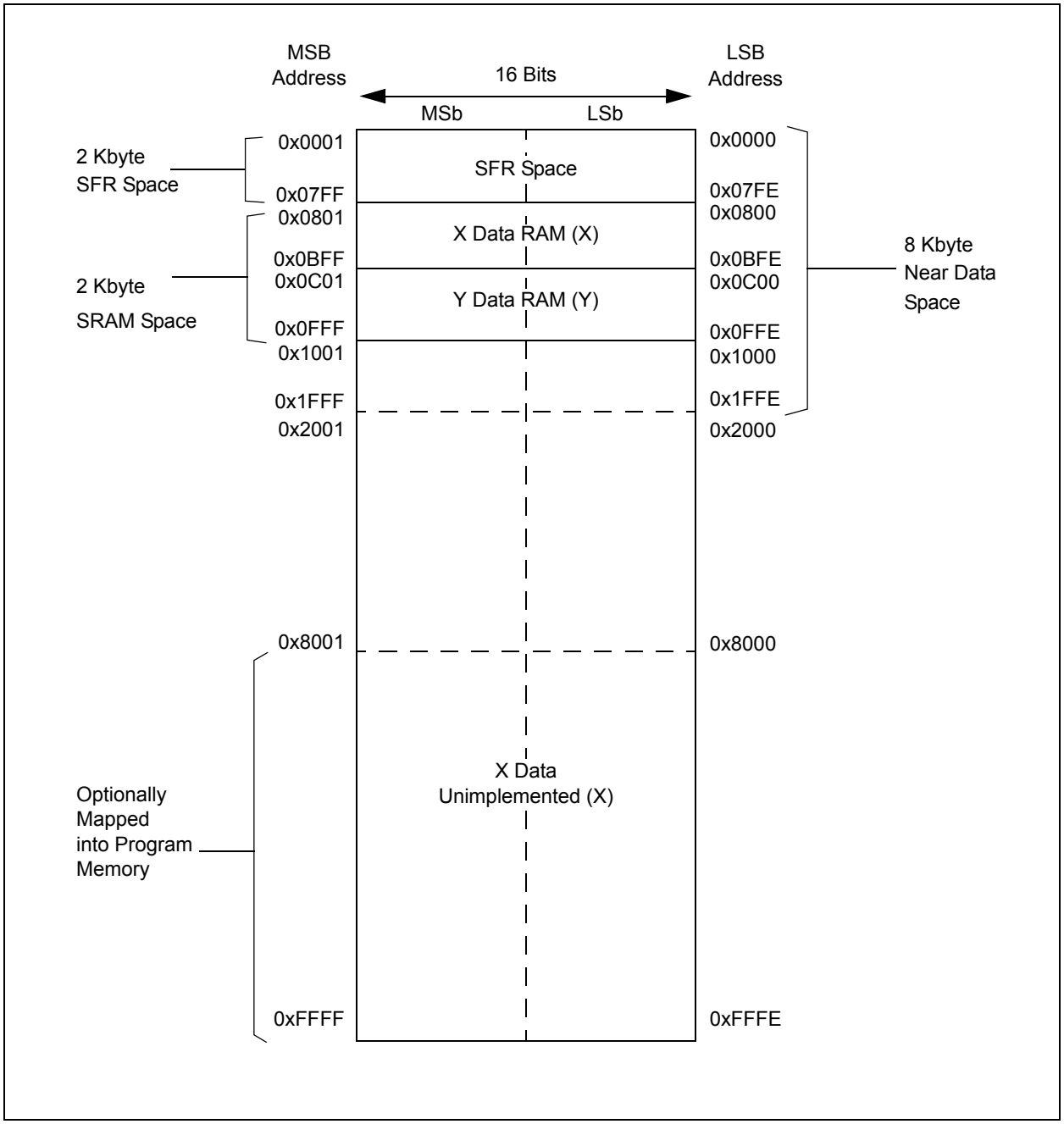

© 2011-2012 Microchip Technology Inc.

4.2.5 X AND Y DATA SPACES

The core has two data spaces, X and Y. These data spaces can be considered either separate (for some DSP instructions), or as one unified linear address range (for MCU instructions). The data spaces are accessed using two Address Generation Units (AGUs) and separate data paths. This feature allows certain instructions to concurrently fetch two words from RAM, thereby enabling efficient execution of DSP algorithms such as Finite Impulse Response (FIR) filtering and Fast Fourier transform (FFT).

The X data space is used by all instructions and supports all addressing modes. X data space has separate read and write data buses. The X read data bus is the read data path for all instructions that view data space as combined X and Y address space. It is also the X data prefetch path for the dual operand DSP instructions (`MAC` class).

The Y data space is used in concert with the X data space by the `MAC` class of instructions (`CLR`, `ED`, `EDAC`, `MAC`, `MOVSAC`, `MPY`, `MPY.N`, and `MSC`) to provide two concurrent data read paths.

Both the X and Y data spaces support Modulo Addressing mode for all instructions, subject to addressing mode restrictions. Bit-Reversed Addressing mode is only supported for writes to X data space.

All data memory writes, including in DSP instructions, view data space as combined X and Y address space. The boundary between the X and Y data spaces is device-dependent and is not user-programmable.

All Effective Addresses are 16 bits wide and point to bytes within the data space. Therefore, the data space address range is 64 Kbytes, or 32K words, although the implemented memory locations vary by device.

TABLE 4-1: CPU CORE REGISTER MAP

SFR Name	SFR Addr	Bit 15	Bit 14	Bit 13	Bit 12	Bit 11	Bit 10	Bit 9	Bit 8	Bit 7	Bit 6	Bit 5	Bit 4	Bit 3	Bit 2	Bit 1	Bit 0	All Resets
WREG0	0000	Working Register 0																xxxx
WREG1	0002	Working Register 1																xxxx
WREG2	0004	Working Register 2																xxxx
WREG3	0006	Working Register 3																xxxx
WREG4	0008	Working Register 4																xxxx
WREG5	000A	Working Register 5																xxxx
WREG6	000C	Working Register 6																xxxx
WREG7	000E	Working Register 7																xxxx
WREG8	0010	Working Register 8																xxxx
WREG9	0012	Working Register 9																xxxx
WREG10	0014	Working Register 10																xxxx
WREG11	0016	Working Register 11																xxxx
WREG12	0018	Working Register 12																xxxx
WREG13	001A	Working Register 13																xxxx
WREG14	001C	Working Register 14																xxxx
WREG15	001E	Working Register 15																0800
SPLIM	0020	Stack Pointer Limit Register																xxxx
ACCAL	0022	Accumulator A Low Word Register																xxxx
ACCAH	0024	Accumulator A High Word Register																xxxx
ACCAU	0026	Accumulator A Upper Word Register																xxxx
ACCBL	0028	Accumulator B Low Word Register																xxxx
ACCBH	002A	Accumulator B High Word Register																xxxx
ACCBU	002C	Accumulator B Upper Word Register																xxxx
PCL	002E	Program Counter Low Word Register																0000
PCH	0030	—	—	—	—	—	—	—	—	Program Counter High Byte Register								0000
TBLPAG	0032	—	—	—	—	—	—	—	—	Table Page Address Pointer Register								0000
PSVPAG	0034	—	—	—	—	—	—	—	—	Program Memory Visibility Page Address Pointer Register								0000
RCOUNT	0036	Repeat Loop Counter Register																xxxx
DCOUNT	0038	DCOUNT<15:0>																xxxx
DOSTARTL	003A	DOSTARTL<15:1>															0	xxxx
DOSTARTH	003C	—	—	—	—	—	—	—	—	—	—	DOSTARTH<5:0>						00xx
DOENDL	003E	DOENDL<15:1>															0	xxxx
DOENDH	0040	—	—	—	—	—	—	—	—	—	—	DOENDH						00xx
SR	0042	OA	OB	SA	SB	OAB	SAB	DA	DC	IPL2	IPL1	IPL0	RA	N	OV	Z	C	0000
CORCON	0044	—	—	—	US	EDT	DL<2:0>			SATA	SATB	SATDW	ACCSAT	IPL3	PSV	RND	IF	0020
MODCON	0046	XMODEN	YMODEN	—	—	BWM<3:0>				YWM<3:0>				XWM<3:0>				0000

Legend: x = unknown value on Reset, — = unimplemented, read as '0'. Reset values are shown in hexadecimal.

© 2011-2012 Microchip Technology Inc.

TABLE 4-1: CPU CORE REGISTER MAP (CONTINUED)

SFR Name	SFR Addr	Bit 15	Bit 14	Bit 13	Bit 12	Bit 11	Bit 10	Bit 9	Bit 8	Bit 7	Bit 6	Bit 5	Bit 4	Bit 3	Bit 2	Bit 1	Bit 0	All Resets
XMODSRT	0048	XS<15:1>															0	xxxx
XMODEND	004A	XE<15:1>															1	xxxx
YMODSRT	004C	YS<15:1>															0	xxxx
YMODEND	004E	YE<15:1>															1	xxxx
XBREV	0050	BREN	XB<14:0>															xxxx
DISICNT	0052	—	—	Disable Interrupts Counter Register														0000

Legend: x = unknown value on Reset, — = unimplemented, read as '0'. Reset values are shown in hexadecimal.

© 2011-2012 Microchip Technology Inc.

TABLE 4-2: CHANGE NOTIFICATION REGISTER MAP FOR dsPIC33FJXXGP101 DEVICES

SFR Name	SFR Addr	Bit 15	Bit 14	Bit 13	Bit 12	Bit 11	Bit 10	Bit 9	Bit 8	Bit 7	Bit 6	Bit 5	Bit 4	Bit 3	Bit 2	Bit 1	Bit 0	All Resets
CNEN1	0060	—	—	—	CN12IE	CN11IE	—	—	—	—	—	CN5IE	CN4IE	CN3IE	CN2IE	CN1IE	CN0IE	0000
CNEN2	0062	—	CN30IE	CN29IE	—	—	—	—	—	CN23IE	CN22IE	CN21IE	—	—	—	—	—	0000
CNPU1	0068	—	—	—	CN12PUE	CN11PUE	—	—	—	—	—	CN5PUE	CN4PUE	CN3PUE	CN2PUE	CN1PUE	CN0PUE	0000
CNPU2	006A	—	CN30PUE	CN29PUE	—	—	—	—	—	CN23PUE	CN22PUE	CN21PUE	—	—	—	—	—	0000

Legend: x = unknown value on Reset, — = unimplemented, read as '0'. Reset values are shown in hexadecimal.

TABLE 4-3: CHANGE NOTIFICATION REGISTER MAP FOR dsPIC33FJXXMC101 DEVICES

SFR Name	SFR Addr	Bit 15	Bit 14	Bit 13	Bit 12	Bit 11	Bit 10	Bit 9	Bit 8	Bit 7	Bit 6	Bit 5	Bit 4	Bit 3	Bit 2	Bit 1	Bit 0	All Resets
CNEN1	0060	—	CN14IE	CN13IE	CN12IE	CN11IE	—	—	—	—	—	CN5IE	CN4IE	CN3IE	CN2IE	CN1IE	CN0IE	0000
CNEN2	0062	—	CN30IE	CN29IE	—	—	—	—	—	CN23IE	CN22IE	CN21IE	—	—	—	—	—	0000
CNPU1	0068	—	CN14PUE	CN13PUE	CN12PUE	CN11PUE	—	—	—	—	—	CN5PUE	CN4PUE	CN3PUE	CN2PUE	CN1PUE	CN0PUE	0000
CNPU2	006A	—	CN30PUE	CN29PUE	—	—	—	—	—	CN23PUE	CN22PUE	CN21PUE	—	—	—	—	—	0000

Legend: x = unknown value on Reset, — = unimplemented, read as '0'. Reset values are shown in hexadecimal.

TABLE 4-4: CHANGE NOTIFICATION REGISTER MAP FOR dsPIC33FJXX(GP/MC)102 DEVICES

SFR Name	SFR Addr	Bit 15	Bit 14	Bit 13	Bit 12	Bit 11	Bit 10	Bit 9	Bit 8	Bit 7	Bit 6	Bit 5	Bit 4	Bit 3	Bit 2	Bit 1	Bit 0	All Resets
CNEN1	0060	CN15IE	CN14IE	CN13IE	CN12IE	CN11IE	—	—	—	CN7IE	CN6IE	CN5IE	CN4IE	CN3IE	CN2IE	CN1IE	CN0IE	0000
CNEN2	0062	—	CN30IE	CN29IE	—	CN27IE	—	—	CN24IE	CN23IE	CN22IE	CN21IE	—	—	—	—	CN16IE	0000
CNPU1	0068	CN15PUE	CN14PUE	CN13PUE	CN12PUE	CN11PUE	—	—	—	CN7PUE	CN6PUE	CN5PUE	CN4PUE	CN3PUE	CN2PUE	CN1PUE	CN0PUE	0000
CNPU2	006A	—	CN30PUE	CN29PUE	—	CN27PUE	—	—	CN24PUE	CN23PUE	CN22PUE	CN21PUE	—	—	—	—	CN16PUE	0000

Legend: x = unknown value on Reset, — = unimplemented, read as '0'. Reset values are shown in hexadecimal.

TABLE 4-5: CHANGE NOTIFICATION REGISTER MAP FOR dsPIC33FJ32(GP/MC)104 DEVICES

SFR Name	SFR Addr	Bit 15	Bit 14	Bit 13	Bit 12	Bit 11	Bit 10	Bit 9	Bit 8	Bit 7	Bit 6	Bit 5	Bit 4	Bit 3	Bit 2	Bit 1	Bit 0	All Resets
CNEN1	0060	CN15IE	CN13IE	CN13IE	CN12IE	CN11IE	CN10IE	CN9IE	CN8IE	CN7IE	CN6IE	CN5IE	CN4IE	CN3IE	CN2IE	CN1IE	CN0IE	0000
CNEN2	0062	—	CN30IE	CN29IE	CN28IE	CN27IE	CN26IE	CN25IE	CN24IE	CN23IE	CN22IE	CN21IE	CN20IE	CN19IE	CN18IE	CN17IE	CN16IE	0000
CNPU1	0068	CN15PUE	CN13PUE	CN13PUE	CN12PUE	CN11PUE	CN10PUE	CN9PUE	CN8PUE	CN7PUE	CN6PUE	CN5PUE	CN4PUE	CN3PUE	CN2PUE	CN1PUE	CN0PUE	0000
CNPU2	006A	—	CN30PUE	CN29PUE	CN28PUE	CN27PUE	CN26PUE	CN25PUE	CN24PUE	CN23PUE	CN22PUE	CN21PUE	CN20PUE	CN19PUE	CN18PUE	CN17PUE	CN16PUE	0000

Legend: x = unknown value on Reset, — = unimplemented, read as '0'. Reset values are shown in hexadecimal.

© 2011-2012 Microchip Technology Inc.

TABLE 4-6: INTERRUPT CONTROLLER REGISTER MAP

SFR Name	SFR Addr	Bit 15	Bit 14	Bit 13	Bit 12	Bit 11	Bit 10	Bit 9	Bit 8	Bit 7	Bit 6	Bit 5	Bit 4	Bit 3	Bit 2	Bit 1	Bit 0	All Resets
INTCON1	0080	NSTDIS	OVAERR	OVBERR	COVAERR	COVBERR	OVATE	OVBTE	COVTE	SFTACERR	DIV0ERR	—	MATHERR	ADDRERR	STKERR	OSCFAIL	—	0000
INTCON2	0082	ALTIVT	DISI	—	—	—	—	—	—	—	—	—	—	—	INT2EP	INT1EP	INT0EP	0000
IFS0	0084	—	—	AD1IF	U1TXIF	U1RXIF	SPI1IF	SPI1EIF	T3IF	T2IF	OC2IF	IC2IF	—	T1IF	OC1IF	IC1IF	INT0IF	0000
IFS1	0086	—	—	INT2IF	T5IF(2)	T4IF(2)	—	—	—	—	—	—	INT1IF	CNIF	CMIF	MI2C1IF	SI2C1IF	0000
IFS2	0088	—	—	—	—	—	—	—	—	—	—	IC3IF	—	—	—	—	—	0000
IFS3	008A	FLTA1IF(1)	RTCIF	—	—	—	—	PWM1IF(1)	—	—	—	—	—	—	—	—	—	0000
IFS4	008C	—	—	CTMUIF	—	—	—	—	—	—	—	—	—	—	—	U1EIF	FLTB1IF(3)	0000
IEC0	0094	—	—	AD1IE	U1TXIE	U1RXIE	SPI1IE	SPI1EIE	T3IE	T2IE	OC2IE	IC2IE	—	T1IE	OC1IE	IC1IE	INT0IE	0000
IEC1	0096	—	—	INT2IE	T5IE(2)	T4IE(2)	—	—	—	—	—	—	INT1IE	CNIE	CMIE	MI2C1IE	SI2C1IE	0000
IEC2	0098	—	—	—	—	—	—	—	—	—	—	IC3IE	—	—	—	—	—	0000
IEC3	009A	FLTA1IE(1)	RTCIE	—	—	—	—	PWM1IE(1)	—	—	—	—	—	—	—	—	—	0000
IEC4	009C	—	—	CTMUIE	—	—	—	—	—	—	—	—	—	—	—	U1EIE	FLTB1IE(3)	0000
IPC0	00A4	—	T1IP<2:0>			—	OC1IP<2:0>			—	IC1IP<2:0>			—	INT0IP<2:0>			4444
IPC1	00A6	—	T2IP<2:0>			—	OC2IP<2:0>			—	IC2IP<2:0>			—	—	—	—	4440
IPC2	00A8	—	U1RXIP<2:0>			—	SPI1IP<2:0>			—	SPI1EIP<2:0>			—	T3IP<2:0>			4444
IPC3	00AA	—	—	—	—	—	—	—	—	—	AD1IP<2:0>			—	U1TXIP<2:0>			0044
IPC4	00AC	—	CNIP<2:0>			—	CMIP<2:0>			—	MI2C1IP<2:0>			—	SI2C1IP<2:0>			4444
IPC5	00AE	—	—	—	—	—	—	—	—	—	—	—	—	—	INT1IP<2:0>			0004
IPC6	00B0	—	T4IP<2:0>(2)			—	—	—	—	—	—	—	—	—	—	—	—	4000
IPC7	00B2	—	—	—	—	—	—	—	—	—	INT2IP<2:0>			—	T5IP<2:0>(2)			0044
IPC9	00B6	—	—	—	—	—	—	—	—	—	IC3IP<2:0>			—	—	—	—	0040
IPC14	00C0	—	—	—	—	—	—	—	—	—	PWM1IP<2:0>(1)			—	—	—	—	0040
IPC15	00C2	—	FLTA1IP<2:0>(1)			—	RTCIP<2:0>			—	—	—	—	—	—	—	—	4400
IPC16	00C4	—	—	—	—	—	—	—	—	—	U1EIP<2:0>			—	FLTB1IP<2:0>(3)			0040
IPC19	00CA	—	—	—	—	—	—	—	—	—	CTMUIP<2:0>			—	—	—	—	0040
INTTREG	00E0	—	—	—	—	ILR<3:0>				—	VECNUM<6:0>							0000

Legend: x = unknown value on Reset, — = unimplemented, read as '0'. Reset values are shown in hexadecimal.

Note 1: This bit is available in dsPIC33FJXXMC10X devices only.

2: This bit is available in dsPIC33FJ32(GP/MC)10X devices only.

3: This bit is available in dsPIC33FJ(16/32)MC102/104 devices only.

© 2011-2012 Microchip Technology Inc.

TABLE 4-7: TIMERS REGISTER MAP FOR dsPIC33FJ16(GP/MC)10X DEVICES

SFR Name	SFR Addr	Bit 15	Bit 14	Bit 13	Bit 12	Bit 11	Bit 10	Bit 9	Bit 8	Bit 7	Bit 6	Bit 5	Bit 4	Bit 3	Bit 2	Bit 1	Bit 0	All Resets
TMR1	0100	Timer1 Register																0000
PR1	0102	Period Register 1																FFFF
T1CON	0104	TON	—	TSIDL	—	—	—	—	—	—	TGATE	TCKPS<1:0>		—	TSYNC	TCS	—	0000
TMR2	0106	Timer2 Register																0000
TMR3HLD	0108	Timer3 Holding Register (for 32-bit timer operations only)																xxxx
TMR3	010A	Timer3 Register																0000
PR2	010C	Period Register 2																FFFF
PR3	010E	Period Register 3																FFFF
T2CON	0110	TON	—	TSIDL	—	—	—	—	—	—	TGATE	TCKPS<1:0>		T32	—	TCS	—	0000
T3CON	0112	TON	—	TSIDL	—	—	—	—	—	—	TGATE	TCKPS<1:0>		—	—	TCS	—	0000

Legend: x = unknown value on Reset, — = unimplemented, read as '0'. Reset values are shown in hexadecimal.

TABLE 4-8: TIMERS REGISTER MAP FOR DSPIC33FJ32(GP/MC)10X DEVICES

SFR Name	SFR Addr	Bit 15	Bit 14	Bit 13	Bit 12	Bit 11	Bit 10	Bit 9	Bit 8	Bit 7	Bit 6	Bit 5	Bit 4	Bit 3	Bit 2	Bit 1	Bit 0	All Resets
TMR1	0100	Timer1 Register																0000
PR1	0102	Period Register 1																FFFF
T1CON	0104	TON	—	TSIDL	—	—	—	—	—	—	TGATE	TCKPS<1:0>		—	TSYNC	TCS	—	0000
TMR2	0106	Timer2 Register																0000
TMR3HLD	0108	Timer3 Holding Register (for 32-bit timer operations only)																xxxx
TMR3	010A	Timer3 Register																0000
PR2	010C	Period Register 2																FFFF
PR3	010E	Period Register 3																FFFF
T2CON	0110	TON	—	TSIDL	—	—	—	—	—	—	TGATE	TCKPS<1:0>		T32	—	TCS	—	0000
T3CON	0112	TON	—	TSIDL	—	—	—	—	—	—	TGATE	TCKPS<1:0>		—	—	TCS	—	0000
TMR4	0114	Timer4 Register																0000
TMR5HLD	0116	Timer5 Holding Register (for 32-bit operations only)																xxxx
TMR5	0118	Timer5 Register																0000
PR4	011A	Period Register 4																FFFF
PR5	011C	Period Register 5																FFFF
T4CON	011E	TON	—	TSIDL	—	—	—	—	—	—	TGATE	TCKPS<1:0>		T32	—	TCS	—	0000
T5CON	0120	TON	—	TSIDL	—	—	—	—	—	—	TGATE	TCKPS<1:0>		—	—	TCS	—	0000

Legend: x = unknown value on Reset, — = unimplemented, read as '0'. Reset values are shown in hexadecimal.

© 2011-2012 Microchip Technology Inc.

TABLE 4-9: INPUT CAPTURE REGISTER MAP

SFR Name	SFR Addr	Bit 15	Bit 14	Bit 13	Bit 12	Bit 11	Bit 10	Bit 9	Bit 8	Bit 7	Bit 6	Bit 5	Bit 4	Bit 3	Bit 2	Bit 1	Bit 0	All Resets
IC1BUF	0140	Input 1 Capture Register																xxxx
IC1CON	0142	—	—	ICSIDL	—	—	—	—	—	ICTMR	ICI<1:0>		ICOV	ICBNE	ICM<2:0>			0000
IC2BUF	0144	Input 2 Capture Register																xxxx
IC2CON	0146	—	—	ICSIDL	—	—	—	—	—	ICTMR	ICI<1:0>		ICOV	ICBNE	ICM<2:0>			0000
IC3BUF	0148	Input 3 Capture Register																xxxx
IC3CON	014A	—	—	ICSIDL	—	—	—	—	—	ICTMR	ICI<1:0>		ICOV	ICBNE	ICM<2:0>			0000

Legend: x = unknown value on Reset, — = unimplemented, read as '0'. Reset values are shown in hexadecimal.

TABLE 4-10: OUTPUT COMPARE REGISTER MAP

SFR Name	SFR Addr	Bit 15	Bit 14	Bit 13	Bit 12	Bit 11	Bit 10	Bit 9	Bit 8	Bit 7	Bit 6	Bit 5	Bit 4	Bit 3	Bit 2	Bit 1	Bit 0	All Resets
OC1RS	0180	Output Compare 1 Secondary Register																xxxx
OC1R	0182	Output Compare 1 Register																xxxx
OC1CON	0184	—	—	OCSIDL	—	—	—	—	—	—	—	—	OCFLT	OCTSEL	OCM<2:0>			0000
OC2RS	0186	Output Compare 2 Secondary Register																xxxx
OC2R	0188	Output Compare 2 Register																xxxx
OC2CON	018A	—	—	OCSIDL	—	—	—	—	—	—	—	—	OCFLT	OCTSEL	OCM<2:0>			0000

Legend: x = unknown value on Reset, — = unimplemented, read as '0'. Reset values are shown in hexadecimal.

TABLE 4-11: 6-OUTPUT PWM1 REGISTER MAP FOR dsPIC33FJXXMC10X DEVICES

SFR Name	Addr.	Bit 15	Bit 14	Bit 13	Bit 12	Bit 11	Bit 10	Bit 9	Bit 8	Bit 7	Bit 6	Bit 5	Bit 4	Bit 3	Bit 2	Bit 1	Bit 0	Reset State
P1TCON	01C0	PTEN	—	PTSIDL	—	—	—	—	—	PTOPS<3:0>				PTCKPS<1:0>		PTMOD<1:0>		0000 0000 0000 0000
P1TMR	01C2	PTDIR	PWM Timer Count Value Register															0000 0000 0000 0000
P1TPER	01C4	—	PWM Time Base Period Register															0111 1111 1111 1111
P1SECMP	01C6	SEVTDIR	PWM Special Event Compare Register															0000 0000 0000 0000
PWM1CON1	01C8	—	—	—	—	—	PMOD3	PMOD2	PMOD1	—	PEN3H	PEN2H	PEN1H	—	PEN3L	PEN2L	PEN1L	0000 0000 0000 0000
PWM1CON2	01CA	—	—	—	—	SEVOPS<3:0>				—	—	—	—	—	IUE	OSYNC	UDIS	0000 0000 0000 0000
P1DTCON1	01CC	DTBPS<1:0>		DTB<5:0>						DTAPS<1:0>		DTA<5:0>						0000 0000 0000 0000
P1DTCON2	01CE	—	—	—	—	—	—	—	—	—	—	DTS3A	DTS3I	DTS2A	DTS2I	DTS1A	DTS1I	0000 0000 0000 0000
P1FLTACON	01D0	—	—	FAOV3H	FAOV3L	FAOV2H	FAOV2L	FAOV1H	FAOV1L	FLTAM	—	—	—	—	FAEN3	FAEN2	FAEN1	0000 0000 0000 0111
P1FLTBCON	01D2	—	—	FBOV3H	FBOV3L	FBOV2H	FBOV2L	FBOV1H	FBOV1L	FLTBM	—	—	—	—	FBEN3	FBEN2	FBEN1	0000 0000 0000 0111
P1OVDCON	01D4	—	—	POVD3H	POVD3L	POVD2H	POVD2L	POVD1H	POVD1L	—	—	POUT3H	POUT3L	POUT2H	POUT2L	POUT1H	POUT1L	0011 1111 0000 0000
P1DC1	01D6	PWM Duty Cycle 1 Register																0000 0000 0000 0000
P1DC2	01D8	PWM Duty Cycle 2 Register																0000 0000 0000 0000
P1DC3	01DA	PWM Duty Cycle 3 Register																0000 0000 0000 0000
PWM1KEY	01DE	PWMKEY <15:0>																0000 0000 0000 0000

Legend: — = unimplemented, read as '0'

© 2011-2012 Microchip Technology Inc.

TABLE 4-12: I2C1 REGISTER MAP

SFR Name	SFR Addr	Bit 15	Bit 14	Bit 13	Bit 12	Bit 11	Bit 10	Bit 9	Bit 8	Bit 7	Bit 6	Bit 5	Bit 4	Bit 3	Bit 2	Bit 1	Bit 0	All Resets
I2C1RCV	0200	—	—	—	—	—	—	—	—	Receive Register								0000
I2C1TRN	0202	—	—	—	—	—	—	—	—	Transmit Register								00FF
I2C1BRG	0204	—	—	—	—	—	—	—	Baud Rate Generator Register									0000
I2C1CON	0206	I2CEN	—	I2CSIDL	SCLREL	IPMIEN	A10M	DISSLW	SMEN	GCEN	STREN	ACKDT	ACKEN	RCEN	PEN	RSEN	SEN	1000
I2C1STAT	0208	ACKSTAT	TRSTAT	—	—	—	BCL	GCSTAT	ADD10	IWCOL	I2COV	D_A	P	S	R_W	RBF	TBF	0000
I2C1ADD	020A	—	—	—	—	—	—	Address Register										0000
I2C1MSK	020C	—	—	—	—	—	—	Address Mask Register										0000

Legend: x = unknown value on Reset, — = unimplemented, read as '0'. Reset values are shown in hexadecimal.

TABLE 4-13: UART1 REGISTER MAP

SFR Name	SFR Addr	Bit 15	Bit 14	Bit 13	Bit 12	Bit 11	Bit 10	Bit 9	Bit 8	Bit 7	Bit 6	Bit 5	Bit 4	Bit 3	Bit 2	Bit 1	Bit 0	All Resets
U1MODE	0220	UARTEN	—	USIDL	IREN	RTSMD	—	UEN1	UEN0	WAKE	LPBACK	ABAUD	URXINV	BRGH	PDSEL<1:0>		STSEL	0000
U1STA	0222	UTXISEL1	UTXINV	UTXISEL0	—	UTXBRK	UTXEN	UTXBF	TRMT	URXISEL<1:0>		ADDEN	RIDLE	PERR	FERR	OERR	URXDA	0110
U1TXREG	0224	—	—	—	—	—	—	—	UART Transmit Register									xxxx
U1RXREG	0226	—	—	—	—	—	—	—	UART Receive Register									0000
U1BRG	0228	Baud Rate Generator Prescaler																0000

Legend: x = unknown value on Reset, — = unimplemented, read as '0'. Reset values are shown in hexadecimal.

TABLE 4-14: SPI1 REGISTER MAP

SFR Name	SFR Addr	Bit 15	Bit 14	Bit 13	Bit 12	Bit 11	Bit 10	Bit 9	Bit 8	Bit 7	Bit 6	Bit 5	Bit 4	Bit 3	Bit 2	Bit 1	Bit 0	All Resets
SPI1STAT	0240	SPIEN	—	SPISIDL	—	—	—	—	—	—	SPIROV	—	—	—	—	SPITBF	SPIRBF	0000
SPI1CON1	0242	—	—	—	DISSCK	DISSDO	MODE16	SMP	CKE	SSEN	CKP	MSTEN	SPRE<2:0>			PPRE<1:0>		0000
SPI1CON2	0244	FRMEN	SPIFSD	FRMPOL	—	—	—	—	—	—	—	—	—	—	—	FRMDLY	—	0000
SPI1BUF	0248	SPI1 Transmit and Receive Buffer Register																0000

Legend: x = unknown value on Reset, — = unimplemented, read as '0'. Reset values are shown in hexadecimal.

© 2011-2012 Microchip Technology Inc.

TABLE 4-15: ADC1 REGISTER MAP FOR dsPIC33FJXX(GP/MC)101 DEVICES

File Name	Addr	Bit 15	Bit 14	Bit 13	Bit 12	Bit 11	Bit 10	Bit 9	Bit 8	Bit 7	Bit 6	Bit 5	Bit 4	Bit 3	Bit 2	Bit 1	Bit 0	All Resets
ADC1BUF0	0300	ADC Data Buffer 0																xxxx
ADC1BUF1	0302	ADC Data Buffer 1																xxxx
ADC1BUF2	0304	ADC Data Buffer 2																xxxx
ADC1BUF3	0306	ADC Data Buffer 3																xxxx
ADC1BUF4	0308	ADC Data Buffer 4																xxxx
ADC1BUF5	030A	ADC Data Buffer 5																xxxx
ADC1BUF6	030C	ADC Data Buffer 6																xxxx
ADC1BUF7	030E	ADC Data Buffer 7																xxxx
ADC1BUF8	0310	ADC Data Buffer 8																xxxx
ADC1BUF9	0312	ADC Data Buffer 9																xxxx
ADC1BUFA	0314	ADC Data Buffer 10																xxxx
ADC1BUFB	0316	ADC Data Buffer 11																xxxx
ADC1BUFC	0318	ADC Data Buffer 12																xxxx
ADC1BUFD	031A	ADC Data Buffer 13																xxxx
ADC1BUFE	031C	ADC Data Buffer 14																xxxx
ADC1BUFF	031E	ADC Data Buffer 15																xxxx
AD1CON1	0320	ADON	—	ADSIDL	—	—	—	FORM<1:0>		SSRC<2:0>			—	SIMSAM	ASAM	SAMP	DONE	0000
AD1CON2	0322	VCFG<2:0>			—	—	CSCNA	CHPS<1:0>		BUFS	—	SMPI<3:0>				BUFM	ALTS	0000
AD1CON3	0324	ADRC	—	—	SAMC<4:0>					ADCS<7:0>								0000
AD1CHS123	0326	—	—	—	—	—	CH123NB<1:0>		CH123SB	—	—	—	—	—	CH123NA<1:0>		CH123SA	0000
AD1CHS0	0328	CH0NB	—	—	CH0SB<4:0>					CH0NA	—	—	CH0SA<4:0>					0000
AD1PCFGL	032C	—	—	—	—	—	PCFG10(1)	PCFG9(1)	—	—	—	—	—	PCFG3	PCFG2	PCFG1	PCFG0	0000
AD1CSSL	0330	—	—	—	—	—	CSS10(1)	CSS9(1)	—	—	—	—	—	CSS3	CSS2	CSS1	CSS0	0000

Legend: x = unknown value on Reset, — = unimplemented, read as '0'. Reset values are shown in hexadecimal.

Note 1: This bit is available in dsPIC33FJ32(GP/MC)101/102 devices only.

© 2011-2012 Microchip Technology Inc.

TABLE 4-16: ADC1 REGISTER MAP FOR dsPIC33FJXX(GP/MC)102 DEVICES

File Name	Addr	Bit 15	Bit 14	Bit 13	Bit 12	Bit 11	Bit 10	Bit 9	Bit 8	Bit 7	Bit 6	Bit 5	Bit 4	Bit 3	Bit 2	Bit 1	Bit 0	All Resets
ADC1BUF0	0300	ADC Data Buffer 0																xxxx
ADC1BUF1	0302	ADC Data Buffer 1																xxxx
ADC1BUF2	0304	ADC Data Buffer 2																xxxx
ADC1BUF3	0306	ADC Data Buffer 3																xxxx
ADC1BUF4	0308	ADC Data Buffer 4																xxxx
ADC1BUF5	030A	ADC Data Buffer 5																xxxx
ADC1BUF6	030C	ADC Data Buffer 6																xxxx
ADC1BUF7	030E	ADC Data Buffer 7																xxxx
ADC1BUF8	0310	ADC Data Buffer 8																xxxx
ADC1BUF9	0312	ADC Data Buffer 9																xxxx
ADC1BUFA	0314	ADC Data Buffer 10																xxxx
ADC1BUFB	0316	ADC Data Buffer 11																xxxx
ADC1BUFC	0318	ADC Data Buffer 12																xxxx
ADC1BUFD	031A	ADC Data Buffer 13																xxxx
ADC1BUFE	031C	ADC Data Buffer 14																xxxx
ADC1BUFF	031E	ADC Data Buffer 15																xxxx
AD1CON1	0320	ADON	—	ADSIDL	—	—	—	FORM<1:0>		SSRC<2:0>			—	SIMSAM	ASAM	SAMP	DONE	0000
AD1CON2	0322	VCFG<2:0>			—	—	CSCNA	CHPS<1:0>		BUFS	—	SMPI<3:0>				BUFM	ALTS	0000
AD1CON3	0324	ADRC	—	—	SAMC<4:0>					ADCS<7:0>								0000
AD1CHS123	0326	—	—	—	—	—	CH123NB<1:0>		CH123SB	—	—	—	—	—	CH123NA<1:0>		CH123SA	0000
AD1CHS0	0328	CH0NB	—	—	CH0SB<4:0>					CH0NA	—	—	CH0SA<4:0>					0000
AD1PCFGL	032C	—	—	—	—	—	PCFG10(1)	PCFG9(1)	—	—	—	PCFG5	PCFG4	PCFG3	PCFG2	PCFG1	PCFG0	0000
AD1CSSL	0330	—	—	—	—	—	CSS10(1)	CSS9(1)	—	—	—	CSS5	CSS4	CSS3	CSS2	CSS1	CSS0	0000

Legend: x = unknown value on Reset, — = unimplemented, read as '0'. Reset values are shown in hexadecimal.

Note 1: This bit is available in dsPIC33FJ32(GP/MC)101/102 devices only.

© 2011-2012 Microchip Technology Inc.

TABLE 4-17: ADC1 REGISTER MAP FOR dsPIC33FJ32(GP/MC)104 DEVICES

File Name	Addr	Bit 15	Bit 14	Bit 13	Bit 12	Bit 11	Bit 10	Bit 9	Bit 8	Bit 7	Bit 6	Bit 5	Bit 4	Bit 3	Bit 2	Bit 1	Bit 0	All Resets
ADC1BUF0	0300	ADC Data Buffer 0																xxxx
ADC1BUF1	0302	ADC Data Buffer 1																xxxx
ADC1BUF2	0304	ADC Data Buffer 2																xxxx
ADC1BUF3	0306	ADC Data Buffer 3																xxxx
ADC1BUF4	0308	ADC Data Buffer 4																xxxx
ADC1BUF5	030A	ADC Data Buffer 5																xxxx
ADC1BUF6	030C	ADC Data Buffer 6																xxxx
ADC1BUF7	030E	ADC Data Buffer 7																xxxx
ADC1BUF8	0310	ADC Data Buffer 8																xxxx
ADC1BUF9	0312	ADC Data Buffer 9																xxxx
ADC1BUFA	0314	ADC Data Buffer 10																xxxx
ADC1BUFB	0316	ADC Data Buffer 11																xxxx
ADC1BUFC	0318	ADC Data Buffer 12																xxxx
ADC1BUFD	031A	ADC Data Buffer 13																xxxx
ADC1BUFE	031C	ADC Data Buffer 14																xxxx
ADC1BUFF	031E	ADC Data Buffer 15																xxxx
AD1CON1	0320	ADON	—	ADSIDL	—	—	—	FORM<1:0>		SSRC<2:0>			—	SIMSAM	ASAM	SAMP	DONE	0000
AD1CON2	0322	VCFG<2:0>			—	—	CSCNA	CHPS<1:0>		BUFS	—	SMPI<3:0>				BUFM	ALTS	0000
AD1CON3	0324	ADRC	—	—	SAMC<4:0>					ADCS<7:0>								0000
AD1CHS123	0326	—	—	—	—	—	CH123NB<1:0>		CH123SB	—	—	—	—	—	CH123NA<1:0>		CH123SA	0000
AD1CHS0	0328	CH0NB	—	—	CH0SB<4:0>					CH0NA	—	—	CH0SA<4:0>					0000
AD1PCFGL	032C	PCFG15	—	—	PCFG12	PCFG11	PCFG10(1)	PCFG9(1)	PCFG8	PCFG7	PCFG6	PCFG5	PCFG4	PCFG3	PCFG2	PCFG1	PCFG0	0000
AD1CSSL	0330	CSS15	—	—	CSS12	CSS11	CSS10(1)	CSS9(1)	CSS8	CSS7	CSS6	CSS5	CSS4	CSS3	CSS2	CSS1	CSS0	0000

Legend: x = unknown value on Reset, — = unimplemented, read as '0'. Reset values are shown in hexadecimal.

Note 1: This bit is available in dsPIC33FJ32(GP/MC)104 devices only.

© 2011-2012 Microchip Technology Inc.

TABLE 4-18: CTMU REGISTER MAP

File Name	Addr	Bit 15	Bit 14	Bit 13	Bit 12	Bit 11	Bit 10	Bit 9	Bit 8	Bit 7	Bit 6	Bit 5	Bit 4	Bit 3	Bit 2	Bit 1	Bit 0	All Resets
CTMUCON1	033A	CTMUEN	—	CTMUSIDL	TGEN	EDGEN	EDGSEQEN	IDISSEN	CTTRIG	—	—	—	—	—	—	—	—	0000
CTMUCON2	033C	EDG1MOD	EDG1POL	EDG1SEL<3:0>				EDG2STAT	EDG1STAT	EDG2MOD	EDG2POL	EDG2SEL<3:0>				—	—	0000
CTMUICON	033E	ITRIM<5:0>						IRNG<1:0>		—	—	—	—	—	—	—	—	0000

Legend: x = unknown value on Reset, — = unimplemented, read as '0'. Reset values are shown in hexadecimal.

TABLE 4-19: REAL-TIME CLOCK AND CALENDAR REGISTER MAP

File Name	Addr	Bit 15	Bit 14	Bit 13	Bit 12	Bit 11	Bit 10	Bit 9	Bit 8	Bit 7	Bit 6	Bit 5	Bit 4	Bit 3	Bit 2	Bit 1	Bit 0	All Resets
ALRMVAL	0620	Alarm Value Register Window based on APTR<1:0>																xxxx
ALCFGRPT	0622	ALRMEN	CHIME	AMASK<3:0>				ALRMPTR<1:0>		ARPT<7:0>								0000
RTCVAL	0624	RTCC Value Register Window based on RTCPTR<1:0>																xxxx
RCFGCAL	0626	RTCEN	—	RTCWREN	RTCSYNC	HALFSEC	RTCOE	RTCPTR<1:0>		CAL<7:0>								0000

Legend: x = unknown value on Reset, — = unimplemented, read as '0'. Reset values are shown in hexadecimal.

TABLE 4-20: PAD CONFIGURATION REGISTER MAP

File Name	Addr	Bit 15	Bit 14	Bit 13	Bit 12	Bit 11	Bit 10	Bit 9	Bit 8	Bit 7	Bit 6	Bit 5	Bit 4	Bit 3	Bit 2	Bit 1	Bit 0	All Resets
PADCFG1	02FC	—	—	—	—	—	—	—	—	—	—	—	—	—	—	RTSECSEL	—	0000

Legend: x = unknown value on Reset, — = unimplemented, read as '0'. Reset values are shown in hexadecimal.

© 2011-2012 Microchip Technology Inc.

TABLE 4-21: COMPARATOR REGISTER MAP

File Name	Addr.	Bit 15	Bit 14	Bit 13	Bit 12	Bit 11	Bit 10	Bit 9	Bit 8	Bit 7	Bit 6	Bit 5	Bit 4	Bit 3	Bit 2	Bit 1	Bit 0	All Resets
CMSTAT	0650	CMSIDL	—	—	—	—	C3EVT	C2EVT	C1EVT	—	—	—	—	—	C3OUT	C2OUT	C1OUT	0000
CVRCON	0652	—	—	—	—	—	VREFSEL	BGSEL<1:0>		CVREN	CVROE	CVRR	—	CVR<3:0>				0000
CM1CON	0654	CON	COE	CPOL	—	—	—	CEVT	COUT	EVPOL<1:0>		—	CREF	—	—	CCH<1:0>		0000
CM1MSKSRC	0656	—	—	—	—	SELSRCC<3:0>				SELSRCB<3:0>				SELSRCA<3:0>				0000
CM1MSKCON	0658	HLMS	—	OCEN	OCNEN	OBEN	OBNEN	OAEN	OANEN	NAGS	PAGS	ACEN	ACNEN	ABEN	ABNEN	AAEN	AANEN	0000
CM1FLTR	065A	—	—	—	—	—	—	—	—	—	CFSEL<2:0>			CFLTREN	CFDIV<2:0>			0000
CM2CON	065C	CON	COE	CPOL	—	—	—	CEVT	COUT	EVPOL<1:0>		—	CREF	—	—	CCH<1:0>		0000
CM2MSKSRC	065E	—	—	—	—	SELSRCC<3:0>				SELSRCB<3:0>				SELSRCA<3:0>				0000
CM2MSKCON	0660	HLMS	—	OCEN	OCNEN	OBEN	OBNEN	OAEN	OANEN	NAGS	PAGS	ACEN	ACNEN	ABEN	ABNEN	AAEN	AANEN	0000
CM2FLTR	0662	—	—	—	—	—	—	—	—	—	CFSEL<2:0>			CFLTREN	CFDIV<2:0>			0000
CM3CON	0664	CON	COE	CPOL	—	—	—	CEVT	COUT	EVPOL<1:0>		—	CREF	—	—	CCH<1:0>		0000
CM3MSKSRC	0666	—	—	—	—	SELSRCC<3:0>				SELSRCB<3:0>				SELSRCA<3:0>				0000
CM3MSKCON	0668	HLMS	—	OCEN	OCNEN	OBEN	OBNEN	OAEN	OANEN	NAGS	PAGS	ACEN	ACNEN	ABEN	ABNEN	AAEN	AANEN	0000
CM3FLTR	066A	—	—	—	—	—	—	—	—	—	CFSEL<2:0>			CFLTREN	CFDIV<2:0>			0000

Legend: x = unknown value on Reset, — = unimplemented, read as '0'. Reset values are shown in hexadecimal.

TABLE 4-22: PERIPHERAL PIN SELECT INPUT REGISTER MAP

File Name	Addr	Bit 15	Bit 14	Bit 13	Bit 12	Bit 11	Bit 10	Bit 9	Bit 8	Bit 7	Bit 6	Bit 5	Bit 4	Bit 3	Bit 2	Bit 1	Bit 0	All Resets
RPINR0	0680	—	—	—	INT1R<4:0>					—	—	—	—	—	—	—	—	1F00
RPINR1	0682	—	—	—	—	—	—	—	—	—	—	—	INT2R<4:0>					001F
RPINR3	0686	—	—	—	T3CKR<4:0>					—	—	—	T2CKR<4:0>					1F1F
RPINR4	0688	—	—	—	T5CKR<4:0>(1)					—	—	—	T4CKR<4:0>(1)					1F1F
RPINR7	068E	—	—	—	IC2R<4:0>					—	—	—	IC1R<4:0>					1F1F
RPINR8	0690	—	—	—	—	—	—	—	—	—	—	—	IC3R<4:0>					001F
RPINR11	0696	—	—	—	—	—	—	—	—	—	—	—	OCFAR<4:0>					001F
RPINR18	06A4	—	—	—	U1CTSR<4:0>					—	—	—	U1RXR<4:0>					1F1F
RPINR20	06A8	—	—	—	SCK1R<4:0>(1)					—	—	—	SDI1R<4:0>(1)					1F1F
RPINR21	06AA	—	—	—	—	—	—	—	—	—	—	—	SS1R<4:0>					001F

Legend: x = unknown value on Reset, — = unimplemented, read as '0'. Reset values are shown in hexadecimal.

Note 1: These bits are available in dsPIC33FJ32(GP/MC)10X devices only.

© 2011-2012 Microchip Technology Inc.

TABLE 4-23: PERIPHERAL PIN SELECT OUTPUT REGISTER MAP FOR dsPIC33FJXXGP101 DEVICES

File Name	Addr	Bit 15	Bit 14	Bit 13	Bit 12	Bit 11	Bit 10	Bit 9	Bit 8	Bit 7	Bit 6	Bit 5	Bit 4	Bit 3	Bit 2	Bit 1	Bit 0	All Resets
RPOR0	06C0	—	—	—	RP1R<4:0>					—	—	—	RP0R<4:0>					0000
RPOR2	06C4	—	—	—	—	—	—	—	—	—	—	—	RP4R<4:0>					0000
RPOR3	06C6	—	—	—	RP7R<4:0>					—	—	—	—	—	—	—	—	0000
RPOR4	06C8	—	—	—	RP9R<4:0>					—	—	—	RP8R<4:0>					0000
RPOR7	06CE	—	—	—	RP15R<4:0>					—	—	—	RP14R<4:0>					0000

Legend: x = unknown value on Reset, — = unimplemented, read as '0'. Reset values are shown in hexadecimal.

TABLE 4-24: PERIPHERAL PIN SELECT OUTPUT REGISTER MAP FOR dsPIC33FJXXMC101 DEVICES

File Name	Addr	Bit 15	Bit 14	Bit 13	Bit 12	Bit 11	Bit 10	Bit 9	Bit 8	Bit 7	Bit 6	Bit 5	Bit 4	Bit 3	Bit 2	Bit 1	Bit 0	All Resets
RPOR0	06C0	—	—	—	RP1R<4:0>					—	—	—	RP0R<4:0>					0000
RPOR2	06C4	—	—	—	—	—	—	—	—	—	—	—	RP4R<4:0>					0000
RPOR3	06C6	—	—	—	RP7R<4:0>					—	—	—	—	—	—	—	—	0000
RPOR4	06C8	—	—	—	RP9R<4:0>					—	—	—	RP8R<4:0>					0000
RPOR6	06CC	—	—	—	RP13R<4:0>					—	—	—	RP12R<4:0>					0000
RPOR7	06CE	—	—	—	RP15R<4:0>					—	—	—	RP14R<4:0>					0000

Legend: x = unknown value on Reset, — = unimplemented, read as '0'. Reset values are shown in hexadecimal.

TABLE 4-25: PERIPHERAL PIN SELECT OUTPUT REGISTER MAP FOR dsPIC33FJXX(GP/MC)102 DEVICES

File Name	Addr	Bit 15	Bit 14	Bit 13	Bit 12	Bit 11	Bit 10	Bit 9	Bit 8	Bit 7	Bit 6	Bit 5	Bit 4	Bit 3	Bit 2	Bit 1	Bit 0	All Resets
RPOR0	06C0	—	—	—	RP1R<4:0>					—	—	—	RP0R<4:0>					0000
RPOR1	06C2	—	—	—	RP3R<4:0>					—	—	—	RP2R<4:0>					0000
RPOR2	06C4	—	—	—	RP5R<4:0>					—	—	—	RP4R<4:0>					0000
RPOR3	06C6	—	—	—	RP7R<4:0>					—	—	—	RP6R<4:0>					0000
RPOR4	06C8	—	—	—	RP9R<4:0>					—	—	—	RP8R<4:0>					0000
RPOR5	06CA	—	—	—	RP11R<4:0>					—	—	—	RP10R<4:0>					0000
RPOR6	06CC	—	—	—	RP13R<4:0>					—	—	—	RP12R<4:0>					0000
RPOR7	06CE	—	—	—	RP15R<4:0>					—	—	—	RP14R<4:0>					0000

Legend: x = unknown value on Reset, — = unimplemented, read as '0'. Reset values are shown in hexadecimal.

© 2011-2012 Microchip Technology Inc.

TABLE 4-26: PERIPHERAL PIN SELECT OUTPUT REGISTER MAP FOR dsPIC33FJ32(GP/MC)104 DEVICES

File Name	Addr	Bit 15	Bit 14	Bit 13	Bit 12	Bit 11	Bit 10	Bit 9	Bit 8	Bit 7	Bit 6	Bit 5	Bit 4	Bit 3	Bit 2	Bit 1	Bit 0	All Resets
RPOR0	06C0	—	—	—	RP1R<4:0>					—	—	—	RP0R<4:0>					0000
RPOR1	06C2	—	—	—	RP3R<4:0>					—	—	—	RP2R<4:0>					0000
RPOR2	06C4	—	—	—	RP5R<4:0>					—	—	—	RP4R<4:0>					0000
RPOR3	06C6	—	—	—	RP7R<4:0>					—	—	—	RP6R<4:0>					0000
RPOR4	06C8	—	—	—	RP9R<4:0>					—	—	—	RP8R<4:0>					0000
RPOR5	06CA	—	—	—	RP11R<4:0>					—	—	—	RP10R<4:0>					0000
RPOR6	06CC	—	—	—	RP13R<4:0>					—	—	—	RP12R<4:0>					0000
RPOR7	06CE	—	—	—	RP15R<4:0>					—	—	—	RP14R<4:0>					0000
RPOR8	06D0	—	—	—	RP17R<4:0>					—	—	—	RP16R<4:0>					0000
RPOR9	06D2	—	—	—	RP19R<4:0>					—	—	—	RP18R<4:0>					0000
RPOR10	06D4	—	—	—	RP21R<4:0>					—	—	—	RP20R<4:0>					0000
RPOR11	06D6	—	—	—	RP23R<4:0>					—	—	—	RP22R<4:0>					0000
RPOR12	06D8	—	—	—	RP25R<4:0>					—	—	—	RP24R<4:0>					0000

Legend: x = unknown value on Reset, — = unimplemented, read as '0'. Reset values are shown in hexadecimal.

TABLE 4-27: PORTA REGISTER MAP FOR dsPIC33FJ16(GP/MC)101/102 DEVICES

File Name	Addr	Bit 15	Bit 14	Bit 13	Bit 12	Bit 11	Bit 10	Bit 9	Bit 8	Bit 7	Bit 6	Bit 5	Bit 4	Bit 3	Bit 2	Bit 1	Bit 0	All Resets
TRISA	02C0	—	—	—	—	—	—	—	—	—	—	—	TRISA4	TRISA3	TRISA2	TRISA1	TRISA0	001F
PORTA	02C2	—	—	—	—	—	—	—	—	—	—	—	RA4	RA3	RA2	RA1	RA0	xxxx
LATA	02C4	—	—	—	—	—	—	—	—	—	—	—	LATA4	LATA3	LATA2	LATA1	LATA0	xxxx
ODCA	02C6	—	—	—	—	—	—	—	—	—	—	—	ODCA4	ODCA3	ODCA2	—	—	0000

Legend: x = unknown value on Reset, — = unimplemented, read as '0'. Reset values are shown in hexadecimal.

TABLE 4-28: PORTA REGISTER MAP FOR dsPIC33FJ32(GP/MC)101/102 DEVICES

File Name	Addr	Bit 15	Bit 14	Bit 13	Bit 12	Bit 11	Bit 10	Bit 9	Bit 8	Bit 7	Bit 6	Bit 5	Bit 4	Bit 3	Bit 2	Bit 1	Bit 0	All Resets
TRISA	02C0	—	—	—	—	—	—	—	—	—	—	—	TRISA4	TRISA3	TRISA2	TRISA1	TRISA0	001F
PORTA	02C2	—	—	—	—	—	—	—	—	—	—	—	RA4	RA3	RA2	RA1	RA0	xxxx
LATA	02C4	—	—	—	—	—	—	—	—	—	—	—	LATA4	LATA3	LATA2	LATA1	LATA0	xxxx
ODCA	02C6	—	—	—	—	—	—	—	—	—	—	—	—	ODCA3	ODCA2	—	—	0000

Legend: x = unknown value on Reset, — = unimplemented, read as '0'. Reset values are shown in hexadecimal.

© 2011-2012 Microchip Technology Inc.

TABLE 4-29: PORTA REGISTER MAP FOR dsPIC33FJ32(GP/MC)104 DEVICES

File Name	Addr	Bit 15	Bit 14	Bit 13	Bit 12	Bit 11	Bit 10	Bit 9	Bit 8	Bit 7	Bit 6	Bit 5	Bit 4	Bit 3	Bit 2	Bit 1	Bit 0	All Resets
TRISA	02C0	—	—	—	—	—	TRISA10	TRISA9	TRISA8	TRISA7	—	—	TRISA4	TRISA3	TRISA2	TRISA1	TRISA0	001F
PORTA	02C2	—	—	—	—	—	RA10	RA9	RA8	RA7	—	—	RA4	RA3	RA2	RA1	RA0	xxxx
LATA	02C4	—	—	—	—	—	LATA10	LATA9	LATA8	LATA7	—	—	LATA4	LATA3	LATA2	LATA1	LATA0	xxxx
ODCA	02C6	—	—	—	—	—	ODCA10	ODCA9	ODCBA	ODCA7	—	—	—	ODCA3	ODCA2	—	—	0000

Legend: x = unknown value on Reset, — = unimplemented, read as '0'. Reset values are shown in hexadecimal.

TABLE 4-30: PORTB REGISTER MAP FOR dsPIC33FJ16GP101 DEVICES

File Name	Addr	Bit 15	Bit 14	Bit 13	Bit 12	Bit 11	Bit 10	Bit 9	Bit 8	Bit 7	Bit 6	Bit 5	Bit 4	Bit 3	Bit 2	Bit 1	Bit 0	All Resets
TRISB	02C8	TRISB15	TRISB14	—	—	—	—	TRISB9	TRISB8	TRISB7	—	—	TRISB4	—	—	TRISB1	TRISB0	C393
PORTB	02CA	RB15	RB14	—	—	—	—	RB9	RB8	RB7	—	—	RB4	—	—	RB1	RB0	xxxx
LATB	02CC	LATB15	LATB14	—	—	—	—	LATB9	LATB8	LATB7	—	—	LATB4	—	—	LATB1	LATB0	xxxx
ODCB	02CE	ODCB15	ODCB14	—	—	—	—	ODCB9	ODCB8	ODCB7	—	—	ODCB4	—	—	—	—	0000

Legend: x = unknown value on Reset, — = unimplemented, read as '0'. Reset values are shown in hexadecimal

TABLE 4-31: PORTB REGISTER MAP FOR dsPIC33FJ16MC101 DEVICES

File Name	Addr	Bit 15	Bit 14	Bit 13	Bit 12	Bit 11	Bit 10	Bit 9	Bit 8	Bit 7	Bit 6	Bit 5	Bit 4	Bit 3	Bit 2	Bit 1	Bit 0	All Resets
TRISB	02C8	TRISB15	TRISB14	TRISB13	TRISB12	—	—	TRISB9	TRISB8	TRISB7	—	—	TRISB4	—	—	TRISB1	TRISB0	F393
PORTB	02CA	RB15	RB14	RB13	RB12	—	—	RB9	RB8	RB7	—	—	RB4	—	—	RB1	RB0	xxxx
LATB	02CC	LATB15	LATB14	LATB13	LATB12	—	—	LATB9	LATB8	LATB7	—	—	LATB4	—	—	LATB1	LATB0	xxxx
ODCB	02CE	ODCB15	ODCB14	ODCB13	ODCB12	—	—	ODCB9	ODCB8	ODCB7	—	—	ODCB4	—	—	—	—	0000

Legend: x = unknown value on Reset, — = unimplemented, read as '0'. Reset values are shown in hexadecimal

TABLE 4-32: PORTB REGISTER MAP FOR dsPIC33FJ16(GP/MC)102 DEVICES

File Name	Addr	Bit 15	Bit 14	Bit 13	Bit 12	Bit 11	Bit 10	Bit 9	Bit 8	Bit 7	Bit 6	Bit 5	Bit 4	Bit 3	Bit 2	Bit 1	Bit 0	All Resets
TRISB	02C8	TRISB15	TRISB14	TRISB13	TRISB12	TRISB11	TRISB10	TRISB9	TRISB8	TRISB7	TRISB6	TRISB5	TRISB4	TRISB3	TRISB2	TRISB1	TRISB0	FFFF
PORTB	02CA	RB15	RB14	RB13	RB12	RB11	RB10	RB9	RB8	RB7	RB6	RB5	RB4	RB3	RB2	RB1	RB0	xxxx
LATB	02CC	LATB15	LATB14	LATB13	LATB12	LATB11	LATB10	LATB9	LATB8	LATB7	LATB6	LATB5	LATB4	LATB3	LATB2	LATB1	LATB0	xxxx
ODCB	02CE	ODCB15	ODCB14	ODCB13	ODCB12	ODCB11	ODCB10	ODCB9	ODCB8	ODCB7	ODCB6	ODCB5	ODCB4	—	—	—	—	0000

Legend: x = unknown value on Reset, — = unimplemented, read as '0'. Reset values are shown in hexadecimal.

© 2011-2012 Microchip Technology Inc.

TABLE 4-33: PORTB REGISTER MAP FOR dsPIC33FJ32GP101 DEVICES

File Name	Addr	Bit 15	Bit 14	Bit 13	Bit 12	Bit 11	Bit 10	Bit 9	Bit 8	Bit 7	Bit 6	Bit 5	Bit 4	Bit 3	Bit 2	Bit 1	Bit 0	All Resets
TRISB	02C8	TRISB15	TRISB14	—	—	—	—	TRISB9	TRISB8	TRISB7	—	—	TRISB4	—	—	TRISB1	TRISB0	C393
PORTB	02CA	RB15	RB14	—	—	—	—	RB9	RB8	RB7	—	—	RB4	—	—	RB1	RB0	xxxx
LATB	02CC	LATB15	LATB14	—	—	—	—	LATB9	LATB8	LATB7	—	—	LATB4	—	—	LATB1	LATB0	xxxx
ODCB	02CE	ODCB15	ODCB14	—	—	—	—	ODCB9	ODCB8	ODCB7	—	—	—	—	—	—	—	0000

Legend: x = unknown value on Reset, — = unimplemented, read as '0'. Reset values are shown in hexadecimal

TABLE 4-34: PORTB REGISTER MAP FOR dsPIC33FJ32MC101 DEVICES

File Name	Addr	Bit 15	Bit 14	Bit 13	Bit 12	Bit 11	Bit 10	Bit 9	Bit 8	Bit 7	Bit 6	Bit 5	Bit 4	Bit 3	Bit 2	Bit 1	Bit 0	All Resets
TRISB	02C8	TRISB15	TRISB14	TRISB13	TRISB12	—	—	TRISB9	TRISB8	TRISB7	—	—	TRISB4	—	—	TRISB1	TRISB0	F393
PORTB	02CA	RB15	RB14	RB13	RB12	—	—	RB9	RB8	RB7	—	—	RB4	—	—	RB1	RB0	xxxx
LATB	02CC	LATB15	LATB14	LATB13	LATB12	—	—	LATB9	LATB8	LATB7	—	—	LATB4	—	—	LATB1	LATB0	xxxx
ODCB	02CE	ODCB15	ODCB14	ODCB13	ODCB12	—	—	ODCB9	ODCB8	ODCB7	—	—	—	—	—	—	—	0000

Legend: x = unknown value on Reset, — = unimplemented, read as '0'. Reset values are shown in hexadecimal

TABLE 4-35: PORTB REGISTER MAP FOR dsPIC33FJ32(GP/MC)102 AND dsPIC33FJ32(GP/MC)104 DEVICES

File Name	Addr	Bit 15	Bit 14	Bit 13	Bit 12	Bit 11	Bit 10	Bit 9	Bit 8	Bit 7	Bit 6	Bit 5	Bit 4	Bit 3	Bit 2	Bit 1	Bit 0	All Resets
TRISB	02C8	TRISB15	TRISB14	TRISB13	TRISB12	TRISB11	TRISB10	TRISB9	TRISB8	TRISB7	TRISB6	TRISB5	TRISB4	TRISB3	TRISB2	TRISB1	TRISB0	FFFF
PORTB	02CA	RB15	RB14	RB13	RB12	RB11	RB10	RB9	RB8	RB7	RB6	RB5	RB4	RB3	RB2	RB1	RB0	xxxx
LATB	02CC	LATB15	LATB14	LATB13	LATB12	LATB11	LATB10	LATB9	LATB8	LATB7	LATB6	LATB5	LATB4	LATB3	LATB2	LATB1	LATB0	xxxx
ODCB	02CE	ODCB15	ODCB14	ODCB13	ODCB12	ODCB11	ODCB10	ODCB9	ODCB8	ODCB7	ODCB6	ODCB5	—	—	—	—	—	0000

Legend: x = unknown value on Reset, — = unimplemented, read as '0'. Reset values are shown in hexadecimal.

TABLE 4-36: PORTC REGISTER MAP FOR dsPIC33FJ32(GP/MC)104 DEVICES

File Name	Addr	Bit 15	Bit 14	Bit 13	Bit 12	Bit 11	Bit 10	Bit 9	Bit 8	Bit 7	Bit 6	Bit 5	Bit 4	Bit 3	Bit 2	Bit 1	Bit 0	All Resets
TRISC	02D8	—	—	—	—	—	—	TRISC9	TRISC8	TRISC7	TRISC6	TRISC5	TRISC4	TRISC3	TRISC2	TRISC1	TRISC0	FFFF
PORTC	02DA	—	—	—	—	—	—	RC9	RC8	RC7	RC6	RC5	RC4	RC3	RC2	RC1	RC0	xxxx
LATC	02DC	—	—	—	—	—	—	LATC9	LATC8	LATC7	LATC6	LATC5	LATC4	LATC3	LATC2	LATC1	LATC0	xxxx
ODCC	02DE	—	—	—	—	—	—	ODCC9	ODCC8	ODCC7	ODCC6	—	—	—	—	—	—	0000

Legend: x = unknown value on Reset, — = unimplemented, read as '0'. Reset values are shown in hexadecimal.

© 2011-2012 Microchip Technology Inc.

TABLE 4-37: SYSTEM CONTROL REGISTER MAP

File Name	Addr	Bit 15	Bit 14	Bit 13	Bit 12	Bit 11	Bit 10	Bit 9	Bit 8	Bit 7	Bit 6	Bit 5	Bit 4	Bit 3	Bit 2	Bit 1	Bit 0	All Resets
RCON	0740	TRAPR	IOPUWR	—	—	—	—	CM	VREGS	EXTR	SWR	SWDTEN	WDTO	SLEEP	IDLE	BOR	POR	xxxx(1)
OSCCON	0742	—	COSC<2:0>			—	NOSC<2:0>			CLKLOCK	IOLOCK	LOCK	—	CF	—	LPOSCEN	OSWEN	0300(2)
CLKDIV	0744	ROI	DOZE<2:0>			DOZEN	FRCDIV<2:0>			—	—	—	—	—	—	—	—	3040
OSCTUN	0748	—	—	—	—	—	—	—	—	—	—	TUN<5:0>						0000

Legend: x = unknown value on Reset, — = unimplemented, read as '0'. Reset values are shown in hexadecimal.
Note 1: RCON register Reset values are dependent on the type of Reset.
2: OSCCON register Reset values are dependent on the FOSC Configuration bits and by type of Reset.

TABLE 4-38: NVM REGISTER MAP

File Name	Addr	Bit 15	Bit 14	Bit 13	Bit 12	Bit 11	Bit 10	Bit 9	Bit 8	Bit 7	Bit 6	Bit 5	Bit 4	Bit 3	Bit 2	Bit 1	Bit 0	All Resets
NVMCON	0760	WR	WREN	WRERR	—	—	—	—	—	—	ERASE	—	—	NVMOP<3:0>				0000(1)
NVMKEY	0766	—	—	—	—	—	—	—	—	NVMKEY<7:0>								0000

Legend: x = unknown value on Reset, — = unimplemented, read as '0'. Reset values are shown in hexadecimal.
Note 1: Reset value shown is for POR only. Value on other Reset states is dependent on the state of memory write or erase operations at the time of Reset.

TABLE 4-39: PMD REGISTER MAP

File Name	Addr	Bit 15	Bit 14	Bit 13	Bit 12	Bit 11	Bit 10	Bit 9	Bit 8	Bit 7	Bit 6	Bit 5	Bit 4	Bit 3	Bit 2	Bit 1	Bit 0	All Resets
PMD1	0770	T5MD(2)	T4MD(2)	T3MD	T2MD	T1MD	—	PWM1MD(1)	—	I2C1MD	—	U1MD	—	SPI1MD	—	—	AD1MD	0000
PMD2	0772	—	—	—	—	—	IC3MD	IC2MD	IC1MD	—	—	—	—	—	—	OC2MD	OC1MD	0000
PMD3	0774	—	—	—	—	—	CMPMD	RTCCMD	—	—	—	—	—	—	—	—	—	0000
PMD4	0776	—	—	—	—	—	—	—	—	—	—	—	—	—	CTMUMD	—	—	0000

Legend: x = unknown value on Reset, — = unimplemented, read as '0'. Reset values are shown in hexadecimal.
Note 1: This bit is available in dsPIC33FJXXMC10X devices only.
2: This bit is available in dsPIC33FJ32(GP/MC)10X devices only.

© 2011-2012 Microchip Technology Inc.

4.2.6 SOFTWARE STACK

In addition to its use as a working register, the W15 register in the dsPIC33FJ16(GP/MC)101/102 and dsPIC33FJ32(GP/MC)101/102/104 devices is also used as a software Stack Pointer. The Stack Pointer always points to the first available free word and grows from lower to higher addresses. It pre-decrements for stack pops and post-increments for stack pushes, as shown in Figure 4-6. For a PC push during any `CALL` instruction, the MSb of the PC is zero-extended before the push, ensuring that the MSb is always clear.

> **Note:** A PC push during exception processing concatenates the SRL register to the MSb of the PC prior to the push.

The Stack Pointer Limit register (SPLIM) associated with the Stack Pointer sets an upper address boundary for the stack. SPLIM is uninitialized at Reset. As is the case for the Stack Pointer, SPLIM<0> is forced to '`0`' because all stack operations must be word-aligned.

Whenever an EA is generated using W15 as a source or destination pointer, the resulting address is compared with the value in SPLIM. If the contents of the Stack Pointer (W15) and the SPLIM register are equal and a push operation is performed, a stack error trap will not occur. However, the stack error trap will occur on a subsequent push operation. For example, to cause a stack error trap when the stack grows beyond address 0x0C00 in RAM, initialize the SPLIM with the value 0x0BFE.

Similarly, a Stack Pointer underflow (stack error) trap is generated when the Stack Pointer address is found to be less than 0x0800. This prevents the stack from interfering with the SFR space.

A write to the SPLIM register should not be immediately followed by an indirect read operation using W15.

FIGURE 4-6: `CALL` STACK FRAME

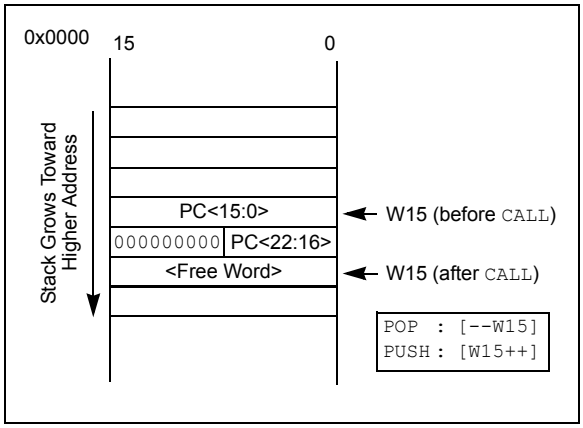

4.2.7 DATA RAM PROTECTION FEATURE

The dsPIC33F product family supports Data RAM protection features that enable segments of RAM to be protected when used in conjunction with Boot and Secure Code Segment Security. BSRAM (Secure RAM Segment for BS) is accessible only from the Boot Segment Flash code when enabled. SSRAM (Secure RAM Segment for RAM) is accessible only from the Secure Segment Flash code when enabled. See Table 4-1 for an overview of the BSRAM and SSRAM SFRs.

4.3 Instruction Addressing Modes

The addressing modes shown in Table 4-40 form the basis of the addressing modes that are optimized to support the specific features of individual instructions. The addressing modes provided in the `MAC` class of instructions differ from those provided in other instruction types.

4.3.1 FILE REGISTER INSTRUCTIONS

Most file register instructions use a 13-bit address field (f) to directly address data present in the first 8192 bytes of data memory (near data space). Most file register instructions employ a working register, W0, which is denoted as WREG in these instructions. The destination is typically either the same file register or WREG (with the exception of the `MUL` instruction), which writes the result to a register or register pair. The `MOV` instruction allows additional flexibility and can access the entire data space.

4.3.2 MCU INSTRUCTIONS

The three-operand MCU instructions are of the form:

Operand 3 = Operand 1 <function> Operand 2

where Operand 1 is always a working register (that is, the addressing mode can only be register direct), which is referred to as Wb. Operand 2 can be a W register, fetched from data memory, or a 5-bit literal. The result location can be either a W register or a data memory location. The following addressing modes are supported by MCU instructions:

- Register Direct
- Register Indirect
- Register Indirect Post-Modified
- Register Indirect Pre-Modified
- 5-Bit or 10-Bit Literal

> **Note:** Not all instructions support all of the addressing modes given above. Individual instructions can support different subsets of these addressing modes.

TABLE 4-40: FUNDAMENTAL ADDRESSING MODES SUPPORTED

Addressing Mode	Description
File Register Direct	The address of the file register is specified explicitly.
Register Direct	The contents of a register are accessed directly.
Register Indirect	The contents of Wn forms the Effective Address (EA).
Register Indirect Post-Modified	The contents of Wn forms the EA. Wn is post-modified (incremented or decremented) by a constant value.
Register Indirect Pre-Modified	Wn is pre-modified (incremented or decremented) by a signed constant value to form the EA.
Register Indirect with Register Offset (Register Indexed)	The sum of Wn and Wb forms the EA.
Register Indirect with Literal Offset	The sum of Wn and a literal forms the EA.

4.3.3 MOVE AND ACCUMULATOR INSTRUCTIONS

Move instructions and the DSP accumulator class of instructions provide a greater degree of addressing flexibility than other instructions. In addition to the addressing modes supported by most MCU instructions, move and accumulator instructions also support Register Indirect with Register Offset Addressing mode, also referred to as Register Indexed mode.

> **Note:** For the `MOV` instructions, the addressing mode specified in the instruction can differ for the source and destination EA. However, the 4-bit Wb (Register Offset) field is shared by both source and destination (but typically only used by one).

In summary, the following addressing modes are supported by move and accumulator instructions:

- Register Direct
- Register Indirect
- Register Indirect Post-modified
- Register Indirect Pre-modified
- Register Indirect with Register Offset (Indexed)
- Register Indirect with Literal Offset
- 8-Bit Literal
- 16-Bit Literal

> **Note:** Not all instructions support all the addressing modes given above. Individual instructions may support different subsets of these addressing modes.

4.3.4 `MAC` INSTRUCTIONS

The dual source operand DSP instructions (`CLR`, `ED`, `EDAC`, `MAC`, `MPY`, `MPY.N`, `MOVSAC`, and `MSC`), also referred to as `MAC` instructions, use a simplified set of addressing modes to allow the user application to effectively manipulate the Data Pointers through register indirect tables.

The two-source operand prefetch registers must be members of the set {W8, W9, W10, W11}. For data reads, W8 and W9 are always directed to the X RAGU, and W10 and W11 are always directed to the Y AGU. The Effective Addresses generated (before and after modification) must, therefore, be valid addresses within X data space for W8 and W9 and Y data space for W10 and W11.

> **Note:** Register Indirect with Register Offset Addressing mode is available only for W9 (in X space) and W11 (in Y space).

In summary, the following addressing modes are supported by the `MAC` class of instructions:

- Register Indirect
- Register Indirect Post-Modified by 2
- Register Indirect Post-Modified by 4
- Register Indirect Post-Modified by 6
- Register Indirect with Register Offset (Indexed)

4.3.5 OTHER INSTRUCTIONS

In addition to the addressing modes outlined previously, some instructions use literal constants of various sizes. For example, `BRA` (branch) instructions use 16-bit signed literals to specify the branch destination directly, whereas the `DISI` instruction uses a 14-bit unsigned literal field. In some instructions, such as `ADD Acc`, the source of an operand or result is implied by the opcode itself. Certain operations, such as `NOP`, do not have any operands.

© 2011-2012 Microchip Technology Inc.

4.4 Modulo Addressing

Modulo Addressing mode is a method of providing an automated means to support circular data buffers using hardware. The objective is to remove the need for software to perform data address boundary checks when executing tightly looped code, as is typical in many DSP algorithms.

Modulo Addressing can operate in either data or program space (since the Data Pointer mechanism is essentially the same for both). One circular buffer can be supported in each of the X (which also provides the pointers into program space) and Y data spaces. Modulo Addressing can operate on any W Register Pointer. However, it is not advisable to use W14 or W15 for Modulo Addressing since these two registers are used as the Stack Frame Pointer and Stack Pointer, respectively.

In general, any particular circular buffer can be configured to operate in only one direction as there are certain restrictions on the buffer start address (for incrementing buffers), or end address (for decrementing buffers), based upon the direction of the circular buffer.

The only exception to the usage restrictions is for buffers that have a power-of-two length. As these buffers satisfy the start and end address criteria, they can operate in a bidirectional mode (that is, address boundary checks are performed on both the lower and upper address boundaries).

4.4.1 START AND END ADDRESS

The Modulo Addressing scheme requires that a starting and ending address be specified and loaded into the 16-bit Modulo Buffer Address registers: XMODSRT, XMODEND, YMODSRT, and YMODEND (see Table 4-1).

Note:	Y space Modulo Addressing EA calculations assume word-sized data (LSb of every EA is always clear).

The length of a circular buffer is not directly specified. It is determined by the difference between the corresponding start and end addresses. The maximum possible length of the circular buffer is 32K words (64 Kbytes).

4.4.2 W ADDRESS REGISTER SELECTION

- The Modulo and Bit-Reversed Addressing Control register, MODCON<15:0>, contains enable flags as well as a W register field to specify the W Address registers. The XWM and YWM fields select which registers will operate with Modulo Addressing.
- If XWM = 15, X RAGU and X WAGU Modulo Addressing is disabled.
- If YWM = 15, Y AGU Modulo Addressing is disabled.

The X Address Space Pointer W register (XWM), to which Modulo Addressing is to be applied, is stored in MODCON<3:0> (see Table 4-1). Modulo Addressing is enabled for X data space when XWM is set to any value other than ‘15’ and the XMODEN bit is set at MODCON<15>.

The Y Address Space Pointer W register (YWM) to which Modulo Addressing is to be applied is stored in MODCON<7:4>. Modulo Addressing is enabled for Y data space when YWM is set to any value other than ‘15’ and the YMODEN bit is set at MODCON<14>.

FIGURE 4-7: MODULO ADDRESSING OPERATION EXAMPLE

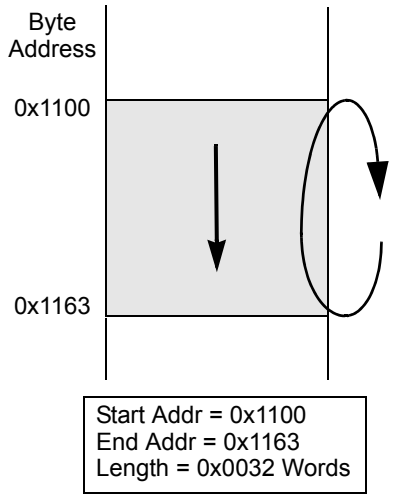


```
MOV     #0x1100, W0
MOV     W0, XMODSRT     ;set modulo start address
MOV     #0x1163, W0
MOV     W0, MODEND      ;set modulo end address
MOV     #0x8001, W0
MOV     W0, MODCON      ;enable W1, X AGU for modulo

MOV     #0x0000, W0     ;W0 holds buffer fill value

MOV     #0x1110, W1     ;point W1 to buffer

DO      AGAIN, #0x31    ;fill the 50 buffer locations
MOV     W0, [W1++]      ;fill the next location
AGAIN:  INC  W0, W0     ;increment the fill value
```


© 2011-2012 Microchip Technology Inc.

4.4.3 MODULO ADDRESSING APPLICABILITY

Modulo Addressing can be applied to the Effective Address (EA) calculation associated with any W register. Address boundaries check for addresses equal to:

- The upper boundary addresses for incrementing buffers
- The lower boundary addresses for decrementing buffers

It is important to realize that the address boundaries check for addresses less than or greater than the upper (for incrementing buffers) and lower (for decrementing buffers) boundary addresses (not just equal to). Address changes can, therefore, jump beyond boundaries and still be adjusted correctly.

Note:	The modulo corrected Effective Address is written back to the register only when Pre-Modify or Post-Modify Addressing mode is used to compute the Effective Address. When an address offset (such as [W7 + W2]) is used, Modulo Address correction is performed, but the contents of the register remain unchanged.

4.5 Bit-Reversed Addressing

Bit-Reversed Addressing mode is intended to simplify data reordering for radix-2 FFT algorithms. It is supported by the X AGU for data writes only.

The modifier, which can be a constant value or register contents, is regarded as having its bit order reversed. The address source and destination are kept in normal order. Thus, the only operand requiring reversal is the modifier.

4.5.1 BIT-REVERSED ADDRESSING IMPLEMENTATION

Bit-Reversed Addressing mode is enabled in any of these situations:

- BWM bits (W register selection) in the MODCON register are any value other than ‘15’ (the stack cannot be accessed using Bit-Reversed Addressing)
- The BREN bit is set in the XBREV register
- The addressing mode used is Register Indirect with Pre-Increment or Post-Increment

If the length of a bit-reversed buffer is $M = 2^N$ bytes, the last ‘N’ bits of the data buffer start address must be zeros.

XB<14:0> is the Bit-Reversed Address modifier, or ‘pivot point,’ which is typically a constant. In the case of an FFT computation, its value is equal to half of the FFT data buffer size.

Note:	All bit-reversed EA calculations assume word-sized data (LSb of every EA is always clear). The XB value is scaled accordingly to generate compatible (byte) addresses.

When enabled, Bit-Reversed Addressing is executed only for Register Indirect with Pre-Increment or Post-Increment Addressing and word-sized data writes. It will not function for any other addressing mode or for byte-sized data and normal addresses are generated instead. When Bit-Reversed Addressing is active, the W Address Pointer is always added to the address modifier (XB) and the offset associated with the Register Indirect Addressing mode is ignored. In addition, as word-sized data is a requirement, the LSb of the EA is ignored (and always clear).

Note:	Modulo Addressing and Bit-Reversed Addressing should not be enabled together. If an application attempts to do so, Bit-Reversed Addressing will assume priority, when active, for the X WAGU, and X WAGU, Modulo Addressing will be disabled. However, Modulo Addressing will continue to function in the X RAGU.

If Bit-Reversed Addressing has already been enabled by setting the BREN (XBREV<15>) bit, a write to the XBREV register should not be immediately followed by an indirect read operation using the W register that has been designated as the Bit-Reversed Pointer.

FIGURE 4-8: BIT-REVERSED ADDRESS EXAMPLE

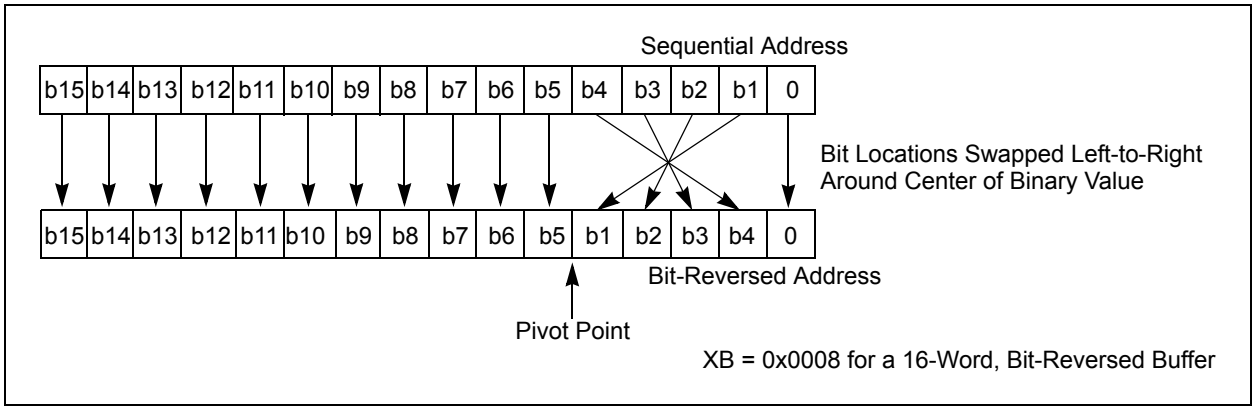

TABLE 4-41: BIT-REVERSED ADDRESS SEQUENCE (16-ENTRY)

Normal Address					Bit-Reversed Address				
A3	A2	A1	A0	Decimal	A3	A2	A1	A0	Decimal
0	0	0	0	0	0	0	0	0	0
0	0	0	1	1	1	0	0	0	8
0	0	1	0	2	0	1	0	0	4
0	0	1	1	3	1	1	0	0	12
0	1	0	0	4	0	0	1	0	2
0	1	0	1	5	1	0	1	0	10
0	1	1	0	6	0	1	1	0	6
0	1	1	1	7	1	1	1	0	14
1	0	0	0	8	0	0	0	1	1
1	0	0	1	9	1	0	0	1	9
1	0	1	0	10	0	1	0	1	5
1	0	1	1	11	1	1	0	1	13
1	1	0	0	12	0	0	1	1	3
1	1	0	1	13	1	0	1	1	11
1	1	1	0	14	0	1	1	1	7
1	1	1	1	15	1	1	1	1	15

© 2011-2012 Microchip Technology Inc.

4.6 Interfacing Program and Data Memory Spaces

The dsPIC33FJ16(GP/MC)101/102 and dsPIC33FJ32(GP/MC)101/102/104 architecture uses a 24-bit-wide program space and a 16-bit-wide data space. The architecture is also a modified Harvard scheme, meaning that data can also be present in the program space. To use this data successfully, it must be accessed in a way that preserves the alignment of information in both spaces.

Aside from normal execution, the dsPIC33FJ16(GP/MC)101/102 and dsPIC33FJ32(GP/MC)101/102/104 architecture provides two methods by which program space can be accessed during operation:

- Using table instructions to access individual bytes, or words, anywhere in the program space
- Remapping a portion of the program space into the data space (Program Space Visibility)

Table instructions allow an application to read or write to small areas of the program memory. This capability makes the method ideal for accessing data tables that need to be updated periodically. It also allows access to all bytes of the program word. The remapping method allows an application to access a large block of data on a read-only basis, which is ideal for lookups from a large table of static data. The application can only access the lsw of the program word.

4.6.1 ADDRESSING PROGRAM SPACE

Since the address ranges for the data and program spaces are 16 and 24 bits, respectively, a method is needed to create a 23-bit or 24-bit program address from 16-bit data registers. The solution depends on the interface method to be used.

For table operations, the 8-bit Table Page register (TBLPAG) is used to define a 32K word region within the program space. This is concatenated with a 16-bit EA to arrive at a full 24-bit program space address. In this format, the MSb of TBLPAG is used to determine if the operation occurs in the user memory (TBLPAG<7> = 0) or the configuration memory (TBLPAG<7> = 1).

For remapping operations, the 8-bit Program Space Visibility register (PSVPAG) is used to define a 16K word page in the program space. When the MSb of the EA is '1', PSVPAG is concatenated with the lower 15 bits of the EA to form a 23-bit program space address. Unlike table operations, this limits remapping operations strictly to the user memory area.

Table 4-42 and Figure 4-9 show how the program EA is created for table operations and remapping accesses from the data EA.

TABLE 4-42: PROGRAM SPACE ADDRESS CONSTRUCTION

Access Type	Access Space	Program Space Address				
		<23>	<22:16>	<15>	<14:1>	<0>
Instruction Access (Code Execution)	User	0	PC<22:1>			0
		0xx xxxx xxxx xxxx xxxx xxx0				
TBLRD/TBLWT (Byte/Word Read/Write)	User	TBLPAG<7:0>		Data EA<15:0>		
		0xxx xxxx		xxxx xxxx xxxx xxxx		
	Configuration	TBLPAG<7:0>		Data EA<15:0>		
		1xxx xxxx		xxxx xxxx xxxx xxxx		
Program Space Visibility (Block Remap/Read)	User	0	PSVPAG<7:0>		Data EA<14:0>(1)	
		0	xxxx xxxx		xxx xxxx xxxx xxxx	

Note 1: Data EA<15> is always '1' in this case, but is not used in calculating the program space address. Bit 15 of the address is PSVPAG<0>.

FIGURE 4-9: DATA ACCESS FROM PROGRAM SPACE ADDRESS GENERATION

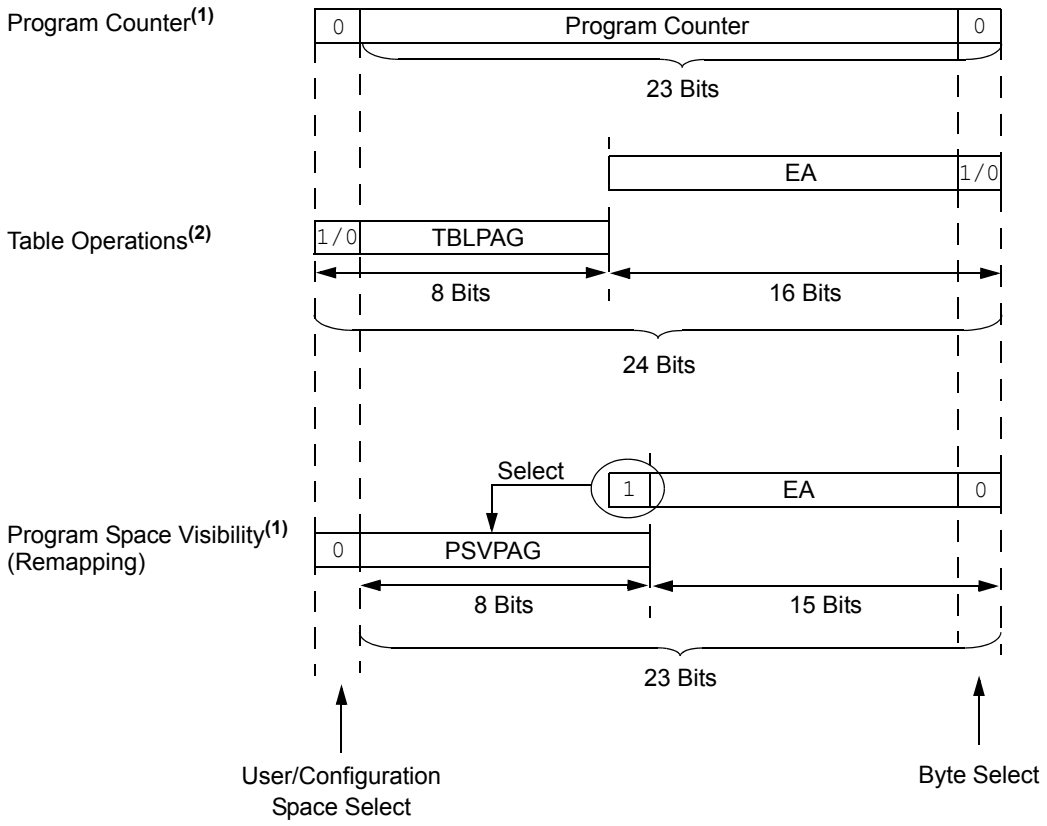

Note 1: The Least Significant bit of program space addresses is always fixed as '0' to maintain word alignment of data in the program and data spaces.

2: Table operations are not required to be word-aligned. Table read operations are permitted in the configuration memory space.

© 2011-2012 Microchip Technology Inc.

4.6.2 DATA ACCESS FROM PROGRAM MEMORY USING TABLE INSTRUCTIONS

The TBLRDL and TBLWTL instructions offer a direct method of reading or writing the lower word of any address within the program space without going through data space. The TBLRDH and TBLWTH instructions are the only method to read or write the upper 8 bits of a program space word as data.

The PC is incremented by two for each successive 24-bit program word. This allows program memory addresses to directly map to data space addresses. Program memory can thus be regarded as two 16-bit-wide word address spaces, residing side by side, each with the same address range. TBLRDL and TBLWTL access the space that contains the least significant data word. TBLRDH and TBLWTH access the space that contains the upper data byte.

Two table instructions are provided to move byte or word-sized (16-bit) data to and from program space. Both function as either byte or word operations.

- TBLRDL (Table Read Low):
  - In Word mode, this instruction maps the lower word of the program space location (P<15:0>) to a data address (D<15:0>).
  - In Byte mode, either the upper or lower byte of the lower program word is mapped to the lower byte of a data address. The upper byte is selected when Byte Select is '1'; the lower byte is selected when it is '0'.
- TBLRDH (Table Read High):
  - In Word mode, this instruction maps the entire upper word of a program address (P<23:16>) to a data address. Note that D<15:8>, the 'phantom byte', will always be '0'.
  - In Byte mode, this instruction maps the upper or lower byte of the program word to D<7:0> of the data address, in the TBLRDL instruction. The data is always '0' when the upper 'phantom' byte is selected (Byte Select = 1).

In a similar fashion, two table instructions, TBLWTH and TBLWTL, are used to write individual bytes or words to a program space address. The details of their operation are explained in **Section 5.0 "Flash Program Memory"**.

For all table operations, the area of program memory space to be accessed is determined by the Table Page register (TBLPAG). TBLPAG covers the entire program memory space of the device, including user and configuration spaces. When TBLPAG<7> = 0, the table page is located in the user memory space. When TBLPAG<7> = 1, the page is located in configuration space.

FIGURE 4-10: ACCESSING PROGRAM MEMORY WITH TABLE INSTRUCTIONS

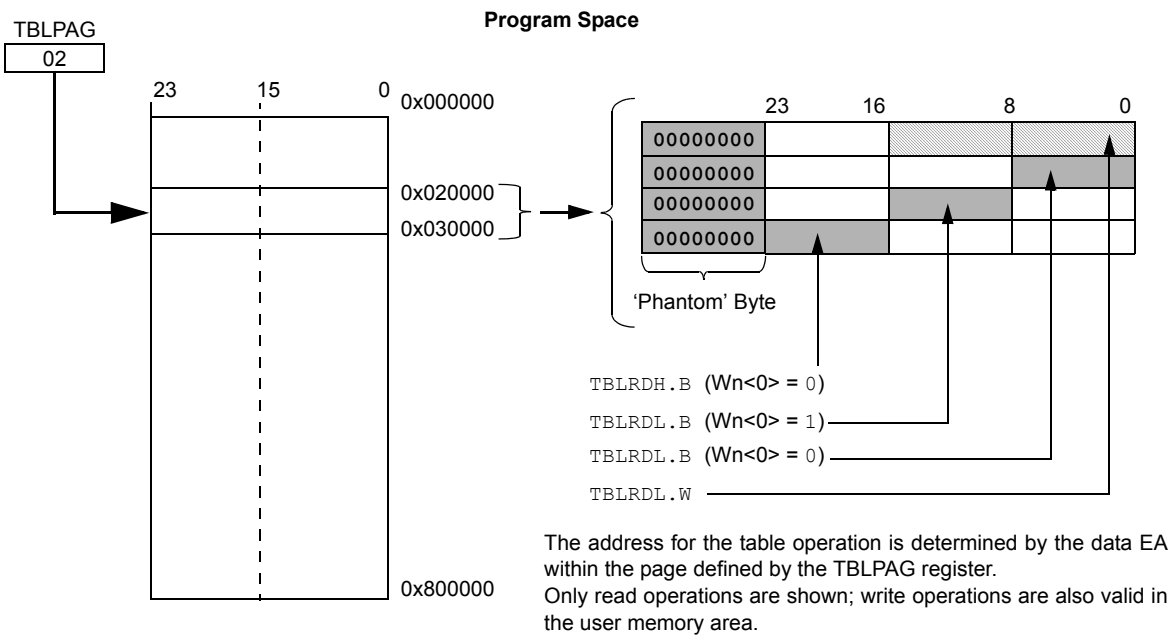

4.6.3 READING DATA FROM PROGRAM MEMORY USING PROGRAM SPACE VISIBILITY

The upper 32 Kbytes of data space may optionally be mapped into any 16K word page of the program space. This option provides transparent access to stored constant data from the data space without the need to use special instructions (such as `TBLRDL` and `TBLRDH`).

Program space access through the data space occurs if the MSb of the data space EA is '`1`' and program space visibility is enabled by setting the PSV bit in the Core Control register (CORCON<2>). The location of the program memory space to be mapped into the data space is determined by the Program Space Visibility Page register (PSVPAG). This 8-bit register defines any one of 256 possible pages of 16K words in program space. In effect, PSVPAG functions as the upper 8 bits of the program memory address, with the 15 bits of the EA functioning as the lower bits. By incrementing the PC by 2 for each program memory word, the lower 15 bits of data space addresses directly map to the lower 15 bits in the corresponding program space addresses.

Data reads to this area add a cycle to the instruction being executed, since two program memory fetches are required.

Although each data space address, 0x8000 and higher, maps directly into a corresponding program memory address (see Figure 4-11), only the lower 16 bits of the 24-bit program word are used to contain the data. The upper 8 bits of any program space location used as data should be programmed with '`1111 1111`' or '`0000 0000`' to force a `NOP`. This prevents possible issues should the area of code ever be accidentally executed.

Note:	PSV access is temporarily disabled during table reads/writes.

For operations that use PSV and are executed outside a `REPEAT` loop, the `MOV` and `MOV.D` instructions require one instruction cycle in addition to the specified execution time. All other instructions require two instruction cycles in addition to the specified execution time.

For operations that use PSV, and are executed inside a `REPEAT` loop, these instances require two instruction cycles in addition to the specified execution time of the instruction:

- Execution in the first iteration
- Execution in the last iteration
- Execution prior to exiting the loop due to an interrupt
- Execution upon re-entering the loop after an interrupt is serviced

Any other iteration of the `REPEAT` loop will allow the instruction using PSV to access data, to execute in a single cycle.

FIGURE 4-11: PROGRAM SPACE VISIBILITY OPERATION

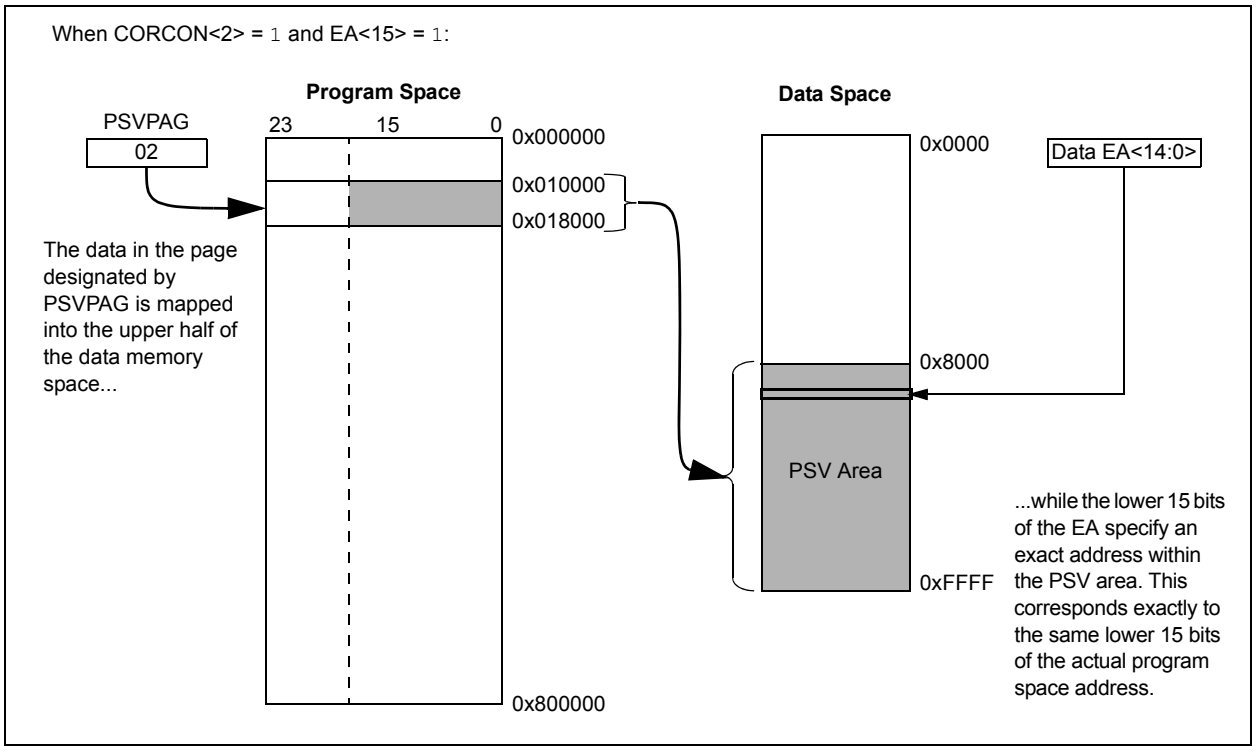

© 2011-2012 Microchip Technology Inc.

5.0 FLASH PROGRAM MEMORY

Note 1: This data sheet summarizes the features of the dsPIC33FJ16(GP/MC)101/102 and dsPIC33FJ32(GP/MC)101/102/104 family devices. It is not intended to be a comprehensive reference source. To complement the information in this data sheet, refer to **Section 5. "Flash Programming"** (DS70191) in the *"dsPIC33F/PIC24H Family Reference Manual"*, which is available from the Microchip web site (www.microchip.com).

2: Some registers and associated bits described in this section may not be available on all devices. Refer to **Section 4.0 "Memory Organization"** in this data sheet for device-specific register and bit information.

The dsPIC33FJ16(GP/MC)101/102 and dsPIC33FJ32(GP/MC)101/102/104 devices contain internal Flash program memory for storing and executing application code. The memory is readable, writable, and erasable during normal operation over the entire VDD range.

Flash memory can be programmed in two ways:

- In-Circuit Serial Programming™ (ICSP™) programming capability
- Run-Time Self-Programming (RTSP)

ICSP allows a device to be serially programmed while in the end application circuit. This is done with two lines for programming clock and programming data (one of the alternate programming pin pairs: PGECx/PGEDx), and three other lines for power (VDD), ground (VSS) and Master Clear ($\overline{MCLR}$). This allows users to manufacture boards with unprogrammed devices, and then program the Digital Signal Controller just before shipping the product. This also allows the most recent firmware or a custom firmware to be programmed.

RTSP is accomplished using `TBLRD` (table read) and `TBLWT` (table write) instructions. With RTSP, the user application can write program memory data in a single program memory word, and erase program memory in blocks or 'pages' of 512 instructions (1536 bytes).

5.1 Table Instructions and Flash Programming

Regardless of the method used, all programming of Flash memory is done with the table read and table write instructions. These allow direct read and write access to the program memory space, from the data memory, while the device is in normal operating mode. The 24-bit target address in the program memory is formed using bits <7:0> of the TBLPAG register and the Effective Address (EA) from a W register specified in the table instruction, as shown in Figure 5-1.

The `TBLRDL` and the `TBLWTL` instructions are used to read or write to bits<15:0> of program memory. `TBLRDL` and `TBLWTL` can access program memory in both Word and Byte modes.

The `TBLRDH` and `TBLWTH` instructions are used to read or write to bits <23:16> of program memory. `TBLRDH` and `TBLWTH` can also access program memory in Word or Byte mode.

FIGURE 5-1: ADDRESSING FOR TABLE REGISTERS

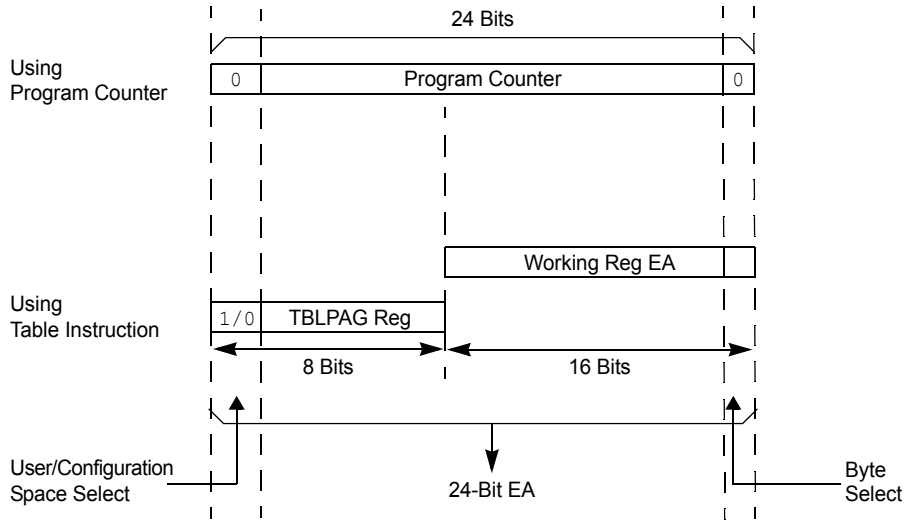

5.2 RTSP Operation

The dsPIC33FJ16(GP/MC)101/102 and dsPIC33FJ32(GP/MC)101/102/104 Flash program memory array is organized into rows of 64 instructions or 192 bytes. RTSP allows the user application to erase a page of memory, which consists of eight rows (512 instructions); and to program one word. Table 26-12 shows typical erase and programming times. The 8-row erase pages are edge-aligned from the beginning of program memory, on boundaries of 1536 bytes.

5.3 Programming Operations

A complete programming sequence is necessary for programming or erasing the internal Flash in RTSP mode. The processor stalls (waits) until the operation is finished.

The programming time depends on the FRC accuracy (see Table 26-18) and the value of the FRC Oscillator Tuning register (see Register 8-3). Use the following formula to calculate the minimum and maximum values for the Word Write Time and Page Erase Time (see Table 26-12).

EQUATION 5-1: PROGRAMMING TIME

$$\frac{T}{7.37\ MHz \times (FRC\ Accuracy)\% \times (FRC\ Tuning)\%}$$

For example, if the device is operating at +125°C, the FRC accuracy will be ±2%. If the TUN<5:0> bits (see Register 8-3) are set to `'b000000`, the minimum row write time is equal to Equation 5-2.

EQUATION 5-2: MINIMUM ROW WRITE TIME

$$T_{RW} = \frac{355\ Cycles}{7.37\ MHz \times (1 + 0.02) \times (1 - 0.00375)} = 47.4\mu s$$

The maximum row write time is equal to Equation 5-3.

EQUATION 5-3: MAXIMUM ROW WRITE TIME

$$T_{RW} = \frac{355\ Cycles}{7.37\ MHz \times (1 - 0.02) \times (1 - 0.00375)} = 49.3\mu s$$

Setting the WR bit (NVMCON<15>) starts the operation, and the WR bit is automatically cleared when the operation is finished.

5.3.1 PROGRAMMING ALGORITHM FOR FLASH PROGRAM MEMORY

Programmers can program one word (24 bits) of program Flash memory at a time. To do this, it is necessary to erase the 8-row erase page that contains the desired address of the location the user wants to change.

For protection against accidental operations, the write initiate sequence for NVMKEY must be used to allow any erase or program operation to proceed. After the programming command has been executed, the user application must wait for the programming time until programming is complete. The two instructions following the start of the programming sequence should be `NOP`s.

> **Note:** Performing a page erase operation on the last page of program memory will clear the Flash Configuration Words, thereby enabling code protection as a result. Therefore, users should avoid performing page erase operations on the last page of program memory.

Refer to **Section 5. "Flash Programming"** (DS70191) in the *"dsPIC33F/PIC24H Family Reference Manual"* for details and codes examples on programming using RTSP.

5.4 Control Registers

Two SFRs are used to read and write the program Flash memory: NVMCON and NVMKEY.

The NVMCON register (Register 5-1) controls which blocks are to be erased, which memory type is to be programmed, and the start of the programming cycle.

NVMKEY is a write-only register that is used for write protection. To start a programming or erase sequence, the user application must consecutively write 0x55 and 0xAA to the NVMKEY register. Refer to **Section 5.3 "Programming Operations"** for further details.

© 2011-2012 Microchip Technology Inc.

REGISTER 5-1: NVMCON: FLASH MEMORY CONTROL REGISTER

R/SO-0(1)	R/W-0(1)	R/W-0(1)	U-0	U-0	U-0	U-0	U-0
WR	WREN	WRERR	—	—	—	—	—
bit 15							bit 8

U-0	R/W-0(1)	U-0	U-0	R/W-0(1)	R/W-0(1)	R/W-0(1)	R/W-0(1)
—	ERASE	—	—	NVMOP<3:0>(2)			
bit 7							bit 0

Legend:	SO = Settable Only bit		
R = Readable bit	W = Writable bit	U = Unimplemented bit, read as ‘0’	
-n = Value at POR	‘1’ = Bit is set	‘0’ = Bit is cleared	x = Bit is unknown

bit 15 **WR:** Write Control bit(1)
- 1 = Initiates a Flash memory program or erase operation. The operation is self-timed and the bit is cleared by hardware once operation is complete
- 0 = Program or erase operation is complete and inactive

bit 14 **WREN:** Write Enable bit(1)
- 1 = Enables Flash program/erase operations
- 0 = Inhibits Flash program/erase operations

bit 13 **WRERR:** Write Sequence Error Flag bit(1)
- 1 = An improper program or erase sequence attempt or termination has occurred (bit is set automatically on any set attempt of the WR bit)
- 0 = The program or erase operation completed normally

bit 12-7 **Unimplemented:** Read as ‘0’

bit 6 **ERASE:** Erase/Program Enable bit(1)
- 1 = Performs the erase operation specified by NVMOP<3:0> on the next WR command
- 0 = Performs the program operation specified by NVMOP<3:0> on the next WR command

bit 5-4 **Unimplemented:** Read as ‘0’

bit 3-0 **NVMOP<3:0>:** NVM Operation Select bits(1,2)

If ERASE = 1:
- 1111 = No operation
- 1101 = Erase General Segment
- 1100 = No operation
- 0011 = No operation
- 0010 = Memory page erase operation
- 0001 = No operation
- 0000 = No operation

If ERASE = 0:
- 1111 = No operation
- 1101 = No operation
- 1100 = No operation
- 0011 = Memory word program operation
- 0010 = No operation
- 0001 = No operation
- 0000 = No operation

Note 1: These bits can only be reset on a POR.

2: All other combinations of NVMOP<3:0> are unimplemented.

REGISTER 5-2: NVMKEY: NONVOLATILE MEMORY KEY REGISTER

U-0	U-0	U-0	U-0	U-0	U-0	U-0	U-0
—	—	—	—	—	—	—	—
bit 15							bit 8

W-0	W-0	W-0	W-0	W-0	W-0	W-0	W-0
NVMKEY<7:0>							
bit 7							bit 0

Legend:			
R = Readable bit	W = Writable bit	U = Unimplemented bit, read as ‘0’	
-n = Value at POR	‘1’ = Bit is set	‘0’ = Bit is cleared	x = Bit is unknown

bit 15-8 **Unimplemented:** Read as ‘0’

bit 7-0 **NVMKEY<7:0>:** Key Register bits (write-only)

© 2011-2012 Microchip Technology Inc.

6.0 RESETS

Note 1: This data sheet summarizes the features of the dsPIC33FJ16(GP/MC)101/102 and dsPIC33FJ32(GP/MC)101/102/104 family devices. It is not intended to be a comprehensive reference source. To complement the information in this data sheet, refer to **Section 8. "Reset"** (DS70192) in the "*dsPIC33F/PIC24H Family Reference Manual*", which is available from the Microchip web site (www.microchip.com).

2: Some registers and associated bits described in this section may not be available on all devices. Refer to **Section 4.0 "Memory Organization"** in this data sheet for device-specific register and bit information.

The Reset module combines all Reset sources and controls the device Master Reset Signal, $\overline{\text{SYSRST}}$. The following is a list of device Reset sources:

- POR: Power-on Reset
- BOR: Brown-out Reset
- $\overline{\text{MCLR}}$: Master Clear Pin Reset
- SWR: `RESET` Instruction
- WDTO: Watchdog Timer Reset
- CM: Configuration Mismatch Reset
- TRAPR: Trap Conflict Reset
- IOPUWR: Illegal Condition Device Reset
  - Illegal Opcode Reset
  - Uninitialized W Register Reset
  - Security Reset

A simplified block diagram of the Reset module is shown in Figure 6-1.

Any active source of Reset will make the $\overline{\text{SYSRST}}$ signal active. On system Reset, some of the registers associated with the CPU and peripherals are forced to a known Reset state, and some are unaffected.

Note: Refer to the specific peripheral section or **Section 3.0 "CPU"** of this data sheet for register Reset states.

All types of device Reset set a corresponding status bit in the RCON register to indicate the type of Reset (see Register 6-1).

All bits that are set, with the exception of the POR bit (RCON<0>), are cleared during a POR event. The user application can set or clear any bit at any time during code execution. The RCON bits only serve as status bits. Setting a particular Reset status bit in software does not cause a device Reset to occur.

The RCON register also has other bits associated with the Watchdog Timer and device power-saving states. The function of these bits is discussed in other sections of this data sheet.

Note: The status bits in the RCON register should be cleared after they are read so that the next RCON register value after a device Reset is meaningful.

FIGURE 6-1: RESET SYSTEM BLOCK DIAGRAM

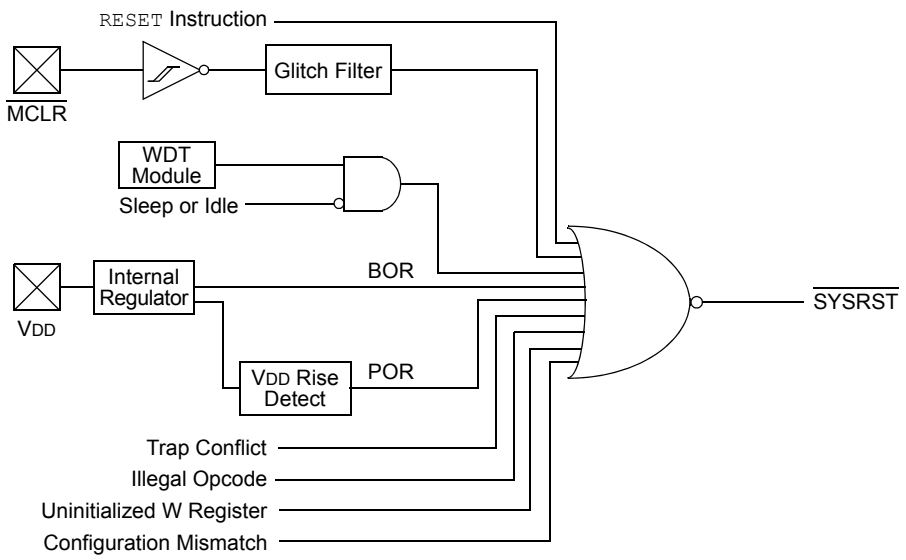

6.1 Reset Control Register

REGISTER 6-1: RCON: RESET CONTROL REGISTER(1)

R/W-0	R/W-0	U-0	U-0	U-0	U-0	R/W-0	R/W-0
TRAPR	IOPUWR	—	—	—	—	CM	VREGS
bit 15							bit 8

R/W-0	R/W-0	R/W-0	R/W-0	R/W-0	R/W-0	R/W-1	R/W-1
EXTR	SWR	SWDTEN(2)	WDTO	SLEEP	IDLE	BOR	POR
bit 7							bit 0

Legend:			
R = Readable bit	W = Writable bit	U = Unimplemented bit, read as ‘0’	
-n = Value at POR	‘1’ = Bit is set	‘0’ = Bit is cleared	x = Bit is unknown

bit 15 **TRAPR:** Trap Reset Flag bit
1 = A Trap Conflict Reset has occurred
0 = A Trap Conflict Reset has not occurred

bit 14 **IOPUWR:** Illegal Opcode or Uninitialized W Access Reset Flag bit
1 = An illegal opcode detection, an illegal address mode or uninitialized W register used as an Address Pointer caused a Reset
0 = An Illegal Opcode or Uninitialized W Reset has not occurred

bit 13-10 **Unimplemented:** Read as ‘0’

bit 9 **CM:** Configuration Mismatch Flag bit
1 = A Configuration Mismatch Reset has occurred
0 = A Configuration Mismatch Reset has not occurred

bit 8 **VREGS:** Voltage Regulator Stand-by During Sleep bit
1 = Voltage regulator is active during Sleep
0 = Voltage regulator goes into Stand-by mode during Sleep

bit 7 **EXTR:** External Reset ($\overline{\text{MCLR}}$) Pin bit
1 = A Master Clear (pin) Reset has occurred
0 = A Master Clear (pin) Reset has not occurred

bit 6 **SWR:** Software Reset (Instruction) Flag bit
1 = A RESET instruction has been executed
0 = A RESET instruction has not been executed

bit 5 **SWDTEN:** Software Enable/Disable of WDT bit(2)
1 = WDT is enabled
0 = WDT is disabled

bit 4 **WDTO:** Watchdog Timer Time-out Flag bit
1 = WDT time-out has occurred
0 = WDT time-out has not occurred

bit 3 **SLEEP:** Wake-up from Sleep Flag bit
1 = Device has been in Sleep mode
0 = Device has not been in Sleep mode

Note 1: All of the Reset status bits can be set or cleared in software. Setting one of these bits in software does not cause a device Reset.

2: If the FWDTEN Configuration bit is ‘1’ (unprogrammed), the WDT is always enabled, regardless of the SWDTEN bit setting.

© 2011-2012 Microchip Technology Inc.

REGISTER 6-1: RCON: RESET CONTROL REGISTER(1) (CONTINUED)

bit 2 **IDLE:** Wake-up from Idle Flag bit

1 = Device has been in Idle mode
0 = Device has not been in Idle mode

bit 1 **BOR:** Brown-out Reset Flag bit

1 = A Brown-out Reset has occurred
0 = A Brown-out Reset has not occurred

bit 0 **POR:** Power-on Reset Flag bit

1 = A Power-on Reset has occurred
0 = A Power-on Reset has not occurred

Note 1: All of the Reset status bits can be set or cleared in software. Setting one of these bits in software does not cause a device Reset.

2: If the FWDTEN Configuration bit is '1' (unprogrammed), the WDT is always enabled, regardless of the SWDTEN bit setting.

6.2 System Reset

The dsPIC33FJ16(GP/MC)101/102 and dsPIC33FJ32(GP/MC)101/102/104 family of devices have two types of Reset:

- Cold Reset
- Warm Reset

A Cold Reset is the result of a POR or a BOR. On a Cold Reset, the FNOSC Configuration bits in the FOSC Configuration register selects the device clock source.

A Warm Reset is the result of all other Reset sources, including the `RESET` instruction. On Warm Reset, the device will continue to operate from the current clock source as indicated by the Current Oscillator Selection (COSC<2:0>) bits in the Oscillator Control (OSCCON<14:12>) register.

The device is kept in a Reset state until the system power supplies have stabilized at appropriate levels and the oscillator clock is ready. The sequence in which this occurs is shown in Figure 6-2.

TABLE 6-1: OSCILLATOR DELAY

Oscillator Mode	Oscillator Start-up Delay	Oscillator Start-up Timer	PLL Lock Time	Total Delay
FRC, FRCDIV16, FRCDIVN	T_{OSCD}(1)	—	—	T_{OSCD}
FRCPLL	T_{OSCD}(1)	—	T_{LOCK}(3)	T_{OSCD}(1) + T_{LOCK}(3)
MS	T_{OSCD}(1)	T_{OST}(2)	—	T_{OSCD}(1) + T_{OST}(2)
HS	T_{OSCD}(1)	T_{OST}(2)	—	T_{OSCD}(1) + T_{OST}(2)
EC	—	—	—	—
MSPLL	T_{OSCD}(1)	T_{OST}(2)	T_{LOCK}(3)	T_{OSCD}(1) + T_{OST}(2) + T_{LOCK}(3)
ECPLL	—	—	T_{LOCK}(3)	T_{LOCK}(3)
SOSC	T_{OSCD}(1)	T_{OST}(2)	—	T_{OSCD}(1) + T_{OST}(2)
LPRC	T_{OSCD}(1)	—	—	T_{OSCD}(1)

Note 1: T_{OSCD} = Oscillator Start-up Delay (1.1 μs max. for FRC, 70 μs max. for LPRC). Crystal oscillator start-up times vary with crystal characteristics, load capacitance, etc.

2: T_{OST} = Oscillator Start-up Timer Delay (1024 oscillator clock period). For example, T_{OST} = 102.4 μs for a 10 MHz crystal and T_{OST} = 32 ms for a 32 kHz crystal.

3: T_{LOCK} = PLL Lock time (1.5 ms nominal) if PLL is enabled.

© 2011-2012 Microchip Technology Inc.

FIGURE 6-2: SYSTEM RESET TIMING

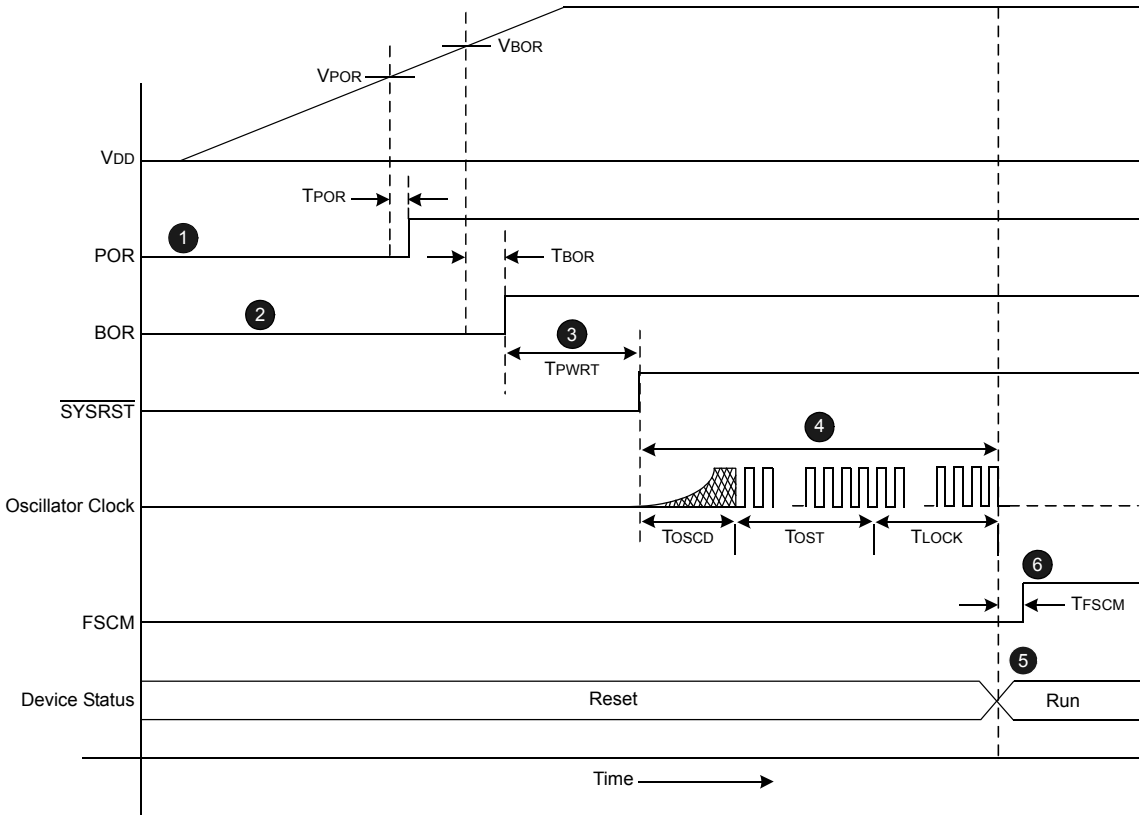

1. **POR:** A POR circuit holds the device in Reset when the power supply is turned on. The POR circuit is active until VDD crosses the VPOR threshold and the delay, TPOR, has elapsed.
2. **BOR:** The on-chip voltage regulator has a BOR circuit that keeps the device in Reset until VDD crosses the VBOR threshold and the delay, TBOR, has elapsed. The delay, TBOR, ensures the voltage regulator output becomes stable.
3. **PWRT Timer:** The Power-up Timer continues to hold the processor in Reset for a specific period of time (TPWRT) after a BOR. The delay, TPWRT, ensures that the system power supplies have stabilized at the appropriate level for full-speed operation. After the delay, TPWRT, has elapsed, the SYSRST becomes inactive, which in turn, enables the selected oscillator to start generating clock cycles.
4. **Oscillator Delay:** The total delay for the clock to be ready for various clock source selections is given in Table 6-1. Refer to **Section 8.0 "Oscillator Configuration"** for more information.
5. When the oscillator clock is ready, the processor begins execution from location, 0x000000. The user application programs a GOTO instruction at the Reset address, which redirects program execution to the appropriate start-up routine.
6. The Fail-Safe Clock Monitor (FSCM), if enabled, begins to monitor the system clock when the system clock is ready and the delay, TFSCM, has elapsed.

TABLE 6-2: OSCILLATOR PARAMETERS

Symbol	Parameter	Value
VPOR	POR Threshold	1.8V nominal
TPOR	POR Extension Time	30 μs maximum
VBOR	BOR Threshold	2.5V nominal
TBOR	BOR Extension Time	100 μs maximum
TPWRT	Power-up Time Delay	64 ms nominal
TFSCM	Fail-Safe Clock Monitor Delay	900 μs maximum

Note: When the device exits the Reset condition (begins normal operation), the device operating parameters (voltage, frequency, temperature, etc.) must be within their operating ranges; otherwise, the device may not function correctly. The user application must ensure that the delay between the time power is first applied, and the time SYSRST becomes inactive, is long enough to get all operating parameters within specification.

6.3 POR

A POR circuit ensures the device is reset from power-on. The POR circuit is active until VDD crosses the VPOR threshold and the delay, TPOR, has elapsed. The delay, TPOR, ensures that the internal device bias circuits become stable.

The device supply voltage characteristics must meet the specified starting voltage and rise rate requirements to generate the POR. Refer to **Section 26.0 "Electrical Characteristics"** for details.

The POR status (POR) bit in the Reset Control (RCON<0>) register is set to indicate the Power-on Reset.

6.4 BOR and PWRT

The on-chip regulator has a BOR circuit that resets the device when the VDD is too low (VDD < VBOR) for proper device operation. The BOR circuit keeps the device in Reset until VDD crosses the VBOR threshold and the delay, TBOR, has elapsed. The delay, TBOR, ensures the voltage regulator output becomes stable.

The BOR status (BOR) bit in the Reset Control (RCON<1>) register is set to indicate the Brown-out Reset.

The device will not run at full speed after a BOR as the VDD should rise to acceptable levels for full-speed operation. The Power-up Timer (PWRT) provides power-up time delay (TPWRT) to ensure that the system power supplies have stabilized at the appropriate levels for full-speed operation before the $\overline{\text{SYSRST}}$ is released.

Refer to **Section 23.0 "Special Features"** for further details.

Figure 6-3 shows the typical brown-out scenarios. The Reset delay (TBOR + TPWRT) is initiated each time VDD rises above the VBOR trip point.

FIGURE 6-3: BROWN-OUT RESET SITUATIONS

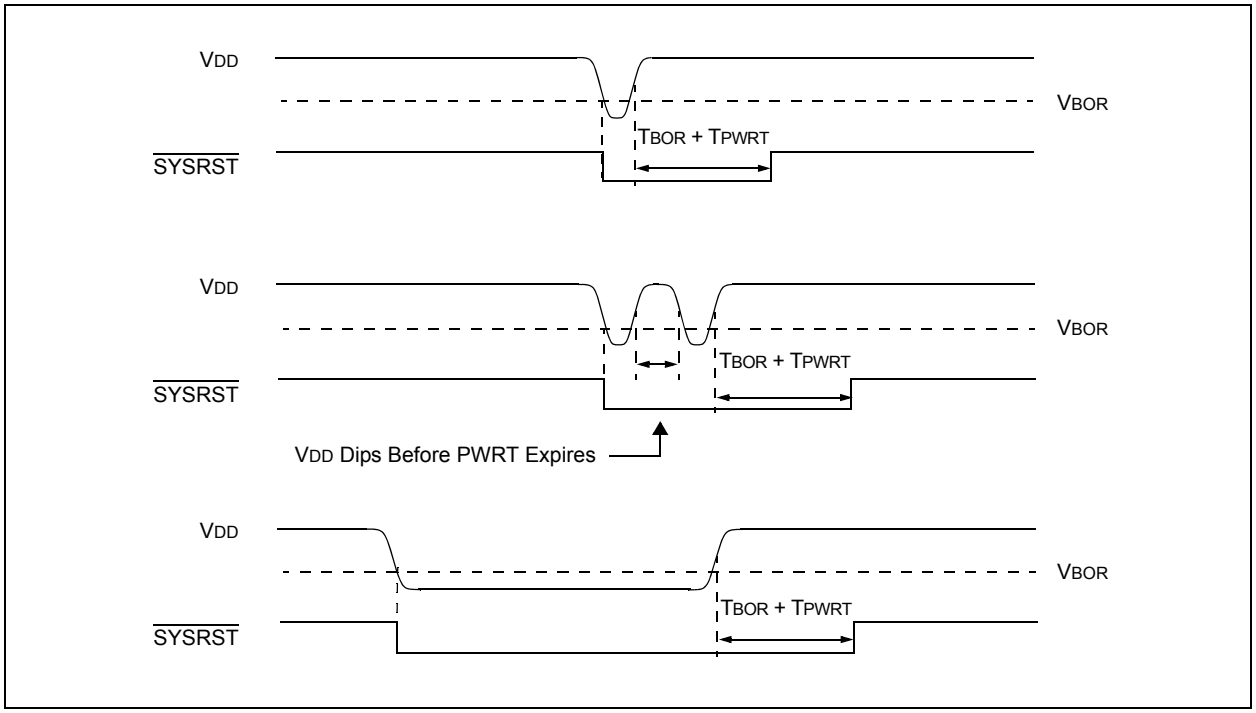

© 2011-2012 Microchip Technology Inc.

6.5 External Reset (EXTR)

The External Reset is generated by driving the $\overline{\text{MCLR}}$ pin low. The $\overline{\text{MCLR}}$ pin is a Schmitt trigger input with an additional glitch filter. Reset pulses that are longer than the minimum pulse width will generate a Reset. Refer to **Section 26.0 "Electrical Characteristics"** for minimum pulse-width specifications. The External Reset ($\overline{\text{MCLR}}$) Pin (EXTR) bit in the Reset Control (RCON) register is set to indicate the $\overline{\text{MCLR}}$ Reset.

6.5.1 EXTERNAL SUPERVISORY CIRCUIT

Many systems have external supervisory circuits that generate Reset signals to reset multiple devices in the system. This External Reset signal can be directly connected to the $\overline{\text{MCLR}}$ pin to reset the device when the rest of the system is reset.

6.5.2 INTERNAL SUPERVISORY CIRCUIT

When using the internal power supervisory circuit to reset the device, the External Reset pin ($\overline{\text{MCLR}}$) should be tied directly or resistively to VDD. In this case, the $\overline{\text{MCLR}}$ pin will not be used to generate a Reset. The External Reset pin ($\overline{\text{MCLR}}$) does not have an internal pull-up and must not be left unconnected.

6.6 Software RESET Instruction (SWR)

Whenever the RESET instruction is executed, the device will assert $\overline{\text{SYSRST}}$, placing the device in a special Reset state. This Reset state will not re-initialize the clock. The clock source in effect prior to the RESET instruction will remain as the source. $\overline{\text{SYSRST}}$ is released at the next instruction cycle and the Reset vector fetch will commence.

The Software Reset (Instruction) Flag (SWR) bit in the Reset Control (RCON<6>) register is set to indicate the Software Reset.

6.7 Watchdog Timer Time-out Reset (WDTO)

Whenever a Watchdog Timer Time-out Reset occurs, the device will asynchronously assert $\overline{\text{SYSRST}}$. The clock source will remain unchanged. A WDT time-out during Sleep or Idle mode will wake-up the processor, but will not reset the processor.

The Watchdog Timer Time-out Flag (WDTO) bit in the Reset Control (RCON<4>) register is set to indicate the Watchdog Reset. Refer to **Section 23.4 "Watchdog Timer (WDT)"** for more information on Watchdog Reset.

6.8 Trap Conflict Reset

If a lower priority hard trap occurs while a higher priority trap is being processed, a hard Trap Conflict Reset occurs. The hard traps include exceptions of Priority Level 13 through Level 15, inclusive. The address error (Level 13) and oscillator error (Level 14) traps fall into this category.

The Trap Reset Flag (TRAPR) bit in the Reset Control (RCON<15>) register is set to indicate the Trap Conflict Reset. Refer to **Section 7.0 "Interrupt Controller"** for more information on Trap Conflict Resets.

6.9 Configuration Mismatch Reset

To maintain the integrity of the Peripheral Pin Select Control registers, they are constantly monitored with shadow registers in hardware. If an unexpected change in any of the registers occurs (such as cell disturbances caused by ESD or other external events), a Configuration Mismatch Reset occurs.

The Configuration Mismatch Flag (CM) bit in the Reset Control (RCON<9>) register is set to indicate the Configuration Mismatch Reset. Refer to **Section 10.0 "I/O Ports"** for more information on the Configuration Mismatch Reset.

Note:	The Configuration Mismatch feature and associated Reset flag is not available on all devices.

6.10 Illegal Condition Device Reset

An Illegal Condition Device Reset occurs due to the following sources:

- Illegal Opcode Reset
- Uninitialized W Register Reset
- Security Reset

The Illegal Opcode or Uninitialized W Access Reset Flag (IOPUWR) bit in the Reset Control (RCON<14>) register is set to indicate the Illegal Condition Device Reset.

6.10.1 ILLEGAL OPCODE RESET

A device Reset is generated if the device attempts to execute an illegal opcode value that is fetched from program memory.

The Illegal Opcode Reset function can prevent the device from executing program memory sections that are used to store constant data. To take advantage of the Illegal Opcode Reset, use only the lower 16 bits of each program memory section to store the data values. The upper 8 bits should be programmed with 0x3F, which is an illegal opcode value.

6.10.2 UNINITIALIZED W REGISTER RESET

Any attempts to use the uninitialized W register as an Address Pointer will reset the device. The W register array (with the exception of W15) is cleared during all Resets and is considered uninitialized until written to.

6.10.3 SECURITY RESET

If a Program Flow Change (PFC) or Vector Flow Change (VFC) targets a restricted location in a protected segment (Boot and Secure Segment), that operation will cause a Security Reset.

The PFC occurs when the Program Counter is reloaded as a result of a Call, Jump, Computed Jump, Return, Return from Subroutine or other form of branch instruction.

The VFC occurs when the Program Counter is reloaded with an interrupt or trap vector.

6.11 Using the RCON Status Bits

The user application can read the Reset Control (RCON) register after any device Reset to determine the cause of the Reset.

> **Note:** The status bits in the RCON register should be cleared after they are read so that the next RCON register value after a device Reset will be meaningful.

Table 6-3 provides a summary of Reset flag bit operation.

TABLE 6-3: RESET FLAG BIT OPERATION

Flag Bit	Set by:	Cleared by:
TRAPR (RCON<15>)	Trap conflict event	POR, BOR
IOPWR (RCON<14>)	Illegal opcode or uninitialized W register access or Security Reset	POR, BOR
CM (RCON<9>)	Configuration Mismatch	POR, BOR
EXTR (RCON<7>)	$\overline{\text{MCLR}}$ Reset	POR
SWR (RCON<6>)	`RESET` instruction	POR, BOR
WDTO (RCON<4>)	WDT Time-out	`PWRSAV` instruction, `CLRWDT` instruction, POR, BOR
SLEEP (RCON<3>)	`PWRSAV #SLEEP` instruction	POR, BOR
IDLE (RCON<2>)	`PWRSAV #IDLE` instruction	POR, BOR
BOR (RCON<1>)	POR, BOR	—
POR (RCON<0>)	POR	—

Note: All Reset flag bits can be set or cleared by user software.

© 2011-2012 Microchip Technology Inc.

7.0 INTERRUPT CONTROLLER

Note 1: This data sheet summarizes the features of the dsPIC33FJ16(GP/MC)101/102 and dsPIC33FJ32(GP/MC)101/102/104 family devices. It is not intended to be a comprehensive reference source. To complement the information in this data sheet, refer to **Section 41. "Interrupts (Part IV)"** (DS70300) in the "*dsPIC33F/PIC24H Family Reference Manual*", which is available on the Microchip web site (www.microchip.com).

2: Some registers and associated bits described in this section may not be available on all devices. Refer to **Section 4.0 "Memory Organization"** in this data sheet for device-specific register and bit information.

The interrupt controller reduces the numerous peripheral interrupt request signals to a single interrupt request signal to the dsPIC33FJ16(GP/MC)101/102 and dsPIC33FJ32(GP/MC)101/102/104 CPU. It has the following features:

- Up to eight processor exceptions and software traps
- Seven user-selectable priority levels
- Interrupt Vector Table (IVT) with up to 118 vectors
- A unique vector for each interrupt or exception source
- Fixed priority within a specified user priority level
- Alternate Interrupt Vector Table (AIVT) for debug support
- Fixed interrupt entry and return latencies

7.1 Interrupt Vector Table

The Interrupt Vector Table (IVT) is shown in Figure 7-1. The IVT resides in program memory, starting at location, 000004h. The IVT contains 126 vectors consisting of eight non-maskable trap vectors, plus up to 118 sources of interrupt. In general, each interrupt source has its own vector. Each interrupt vector contains a 24-bit-wide address. The value programmed into each interrupt vector location is the starting address of the associated Interrupt Service Routine (ISR).

Interrupt vectors are prioritized in terms of their natural priority. This priority is linked to their position in the vector table. Lower addresses generally have a higher natural priority. For example, the interrupt associated with Vector 0 will take priority over interrupts at any other vector address.

dsPIC33FJ16(GP/MC)101/102 and dsPIC33FJ32(GP/MC)101/102/104 devices implement up to 26 unique interrupts and 4 nonmaskable traps. These are summarized in Table 7-1 and Table 7-2.

7.1.1 ALTERNATE INTERRUPT VECTOR TABLE

The Alternate Interrupt Vector Table (AIVT) is located after the IVT, as shown in Figure 7-1. Access to the AIVT is provided by the ALTIVT control bit (INTCON2<15>). If the ALTIVT bit is set, all interrupt and exception processes use the alternate vectors instead of the default vectors. The alternate vectors are organized in the same manner as the default vectors.

The AIVT supports debugging by providing a way to switch between an application and a support environment without requiring the interrupt vectors to be reprogrammed. This feature also enables switching between applications to facilitate evaluation of different software algorithms at run time. If the AIVT is not needed, the AIVT should be programmed with the same addresses used in the IVT.

7.2 Reset Sequence

A device Reset is not a true exception because the interrupt controller is not involved in the Reset process. The dsPIC33FJ16(GP/MC)101/102 and dsPIC33FJ32(GP/MC)101/102/104 devices clear their registers in response to a Reset, forcing the PC to zero. The Digital Signal Controller then begins program execution at location, 0x000000. A `GOTO` instruction at the Reset address can redirect program execution to the appropriate start-up routine.

Note: Any unimplemented or unused vector locations in the IVT and AIVT should be programmed with the address of a default interrupt handler routine that contains a `RESET` instruction.

FIGURE 7-1: dsPIC33FJ16(GP/MC)101/102 AND dsPIC33FJ32(GP/MC)101/102/104 INTERRUPT VECTOR TABLE

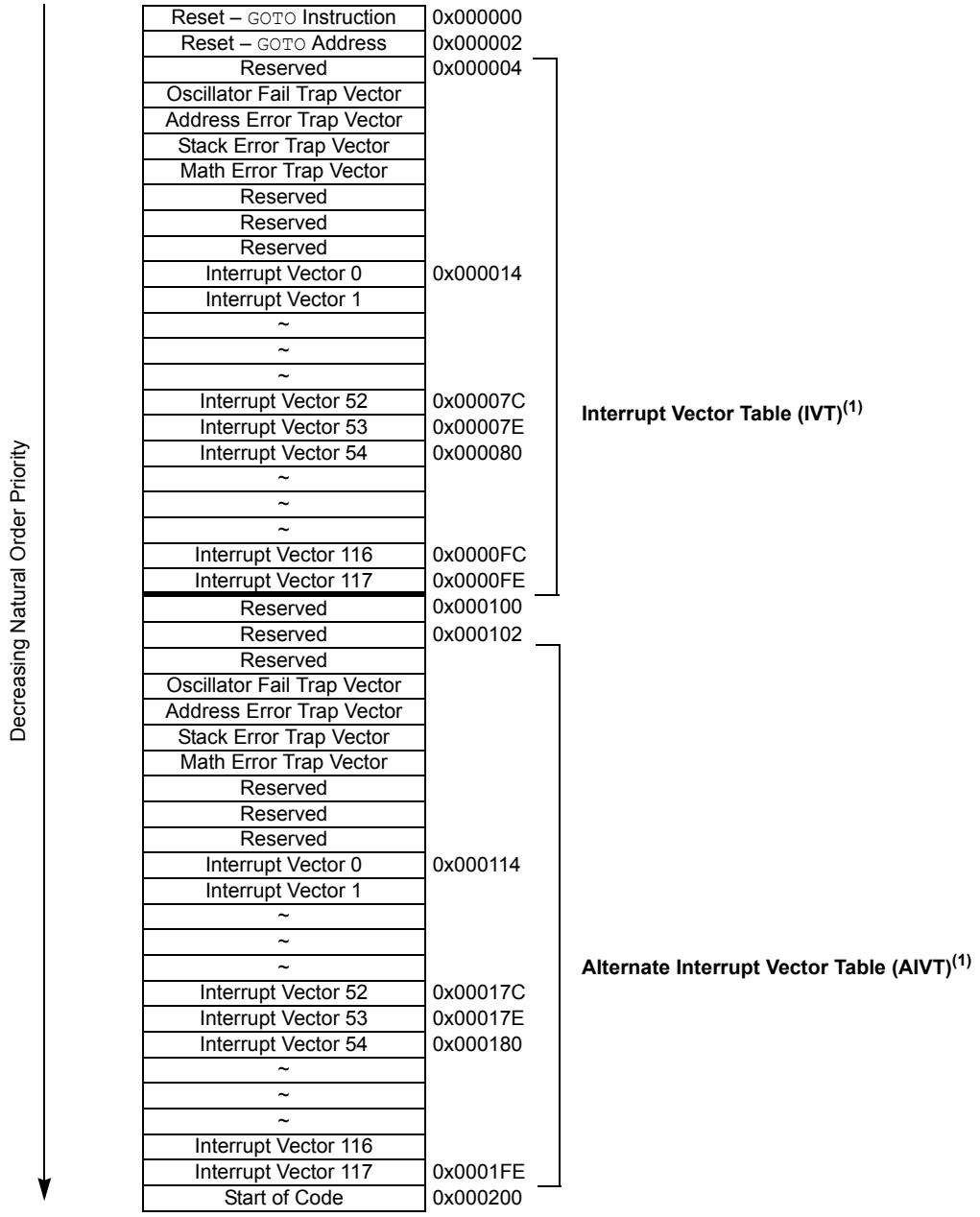

Note 1: See Table 7-1 for the list of implemented interrupt vectors.

© 2011-2012 Microchip Technology Inc.

TABLE 7-1: INTERRUPT VECTORS

Vector Number	Interrupt Request (IRQ) Number	IVT Address	AIVT Address	Interrupt Source
8	0	0x000014	0x000114	INT0 – External Interrupt 0
9	1	0x000016	0x000116	IC1 – Input Capture 1
10	2	0x000018	0x000118	OC1 – Output Compare 1
11	3	0x00001A	0x00011A	T1 – Timer1
12	4	0x00001C	0x00011C	Reserved
13	5	0x00001E	0x00011E	IC2 – Input Capture 2
14	6	0x000020	0x000120	OC2 – Output Compare 2
15	7	0x000022	0x000122	T2 – Timer2
16	8	0x000024	0x000124	T3 – Timer3
17	9	0x000026	0x000126	SPI1E – SPI1 Error
18	10	0x000028	0x000128	SPI1 – SPI1 Transfer Done
19	11	0x00002A	0x00012A	U1RX – UART1 Receiver
20	12	0x00002C	0x00012C	U1TX – UART1 Transmitter
21	13	0x00002E	0x00012E	ADC1 – ADC1
22-23	14-15	0x000030-0x000032	0x000130-0x000132	Reserved
24	16	0x000034	0x000134	SI2C1 – I2C1 Slave Events
25	17	0x000036	0x000136	MI2C1 – I2C1 Master Events
26	18	0x000038	0x000138	CMP – Comparator Interrupt
27	19	0x00003A	0x00013A	Change Notification Interrupt
28	20	0x00003C	0x00013C	INT1 – External Interrupt 1
29-34	21-26	0x00003E-0x000038	0x00013E-0x000138	Reserved
35	27	0x00004A	0x00014A	T4 – Timer4(2)
36	28	0x00004C	0x00014C	T5 – Timer4(2)
37	29	0x00004E	0x00014E	INT2 – External Interrupt 2
38-44	30-36	0x000050-0x00005C	0x000150-0x00015C	Reserved
45	37	0x00005E	0x00015E	IC3 – Input Capture 3
46-64	38-56	0x000060-0x000084	0x000160-0x000184	Reserved
65	57	0x000086	0x000186	PWM1 – PWM1 Period Match(1)
66-69	58-61	0x000088-0x00008E	0x000188-0x00018E	Reserved
70	62	0x000090	0x000190	RTCC – Real-Time Clock and Calendar
71	63	0x000092	0x000192	$\overline{\text{FLTA1}}$ – PWM1 Fault A(1)
72	64	0x000094	0x000194	$\overline{\text{FLTB1}}$ – PWM1 Fault B(3)
73	65	0x000096	0x000196	U1E – UART1 Error
74-84	66-76	0x000098-0x0000AC	0x000198-0x0001AC	Reserved
85	77	0x0000AE	0x0001AE	CTMU – Charge Time Measurement Unit
86-125	78-117	0x0000B0-0x0000FE	0x0001B0-0x0001FE	Reserved

Note 1: This interrupt vector is available in dsPIC33FJ(16/32)MC10X devices only.
2: This interrupt vector is available in dsPIC33FJ32(GP/MC)10X devices only.
3: This interrupt vector is available in dsPIC33FJ(16/32)MC102/104 devices only.

TABLE 7-2: TRAP VECTORS

Vector Number	IVT Address	AIVT Address	Trap Source
0	0x000004	0x000104	Reserved
1	0x000006	0x000106	Oscillator Failure
2	0x000008	0x000108	Address Error
3	0x00000A	0x00010A	Stack Error
4	0x00000C	0x00010C	Math Error
5	0x00000E	0x00010E	Reserved
6	0x000010	0x000110	Reserved
7	0x000012	0x000112	Reserved

7.3 Interrupt Control and Status Registers

The dsPIC33FJ16(GP/MC)101/102 and dsPIC33FJ32(GP/MC)101/102/104 devices implement a total of 22 registers for the interrupt controller:

- INTCON1
- INTCON2
- IFSx
- IECx
- IPCx
- INTTREG

7.3.1 INTCON1 AND INTCON2

Global interrupt functions are controlled from INTCON1 and INTCON2. INTCON1 contains the Interrupt Nesting Disable (NSTDIS) bit as well as the control and status flags for the processor trap sources. The INTCON2 register controls the external interrupt request signal behavior and the use of the Alternate Interrupt Vector Table.

7.3.2 IFSx Registers

The IFSx registers maintain all of the interrupt request flags. Each source of interrupt has a status bit, which is set by the respective peripherals or external signal and is cleared via software.

7.3.3 IECx Registers

The IECx registers maintain all of the interrupt enable bits. These control bits are used to individually enable interrupts from the peripherals or external signals.

7.3.4 IPCx Registers

The IPCx registers are used to set the Interrupt Priority Level (IPL) for each source of interrupt. Each user interrupt source can be assigned to one of eight priority levels.

7.3.5 INTTREG

The INTTREG register contains the associated interrupt vector number and the new CPU Interrupt Priority Level, which are latched into Vector Number (VECNUM<6:0>) and Interrupt Level (ILR<3:0>) bit fields in the INTTREG register. The new Interrupt Priority Level is the priority of the pending interrupt.

The interrupt sources are assigned to the IFSx, IECx and IPCx registers in the same sequence that they are listed in Table 7-1. For example, the INT0 (External Interrupt 0) is shown as having Vector Number 8 and a natural order priority of 0. Thus, the INT0IF bit is found in IFS0<0>, the INT0IE bit in IEC0<0> and the INT0IPx bits in the first positions of IPC0 (IPC0<2:0>).

7.3.6 STATUS/CONTROL REGISTERS

Although they are not specifically part of the interrupt control hardware, two of the CPU Control registers contain bits that control interrupt functionality.

- The CPU STATUS Register, SR, contains the IPL<2:0> bits (SR<7:5>). These bits indicate the current CPU Interrupt Priority Level. The user application can change the current CPU Interrupt Priority Level by writing to the IPLx bits.
- The CORCON register contains the IPL3 bit which, together with IPL<2:0>, also indicates the current CPU Interrupt Priority Level. IPL3 is a read-only bit so that trap events cannot be masked by the user software.

All Interrupt registers are described in Register 7-1 through Register 7-28 in the following pages.

© 2011-2012 Microchip Technology Inc.

REGISTER 7-1: SR: CPU STATUS REGISTER(1)

R-0	R-0	R/C-0	R/C-0	R-0	R/C-0	R-0	R/W-0
OA	OB	SA	SB	OAB	SAB	DA	DC
bit 15							bit 8

R/W-0(3)	R/W-0(3)	R/W-0(3)	R-0	R/W-0	R/W-0	R/W-0	R/W-0
IPL2(2)	**IPL1(2)**	**IPL0(2)**	RA	N	OV	Z	C
bit 7							bit 0

Legend:	C = Clearable bit		
R = Readable bit	W = Writable bit	U = Unimplemented bit, read as ‘0’	
-n = Value at POR	‘1’ = Bit is set	‘0’ = Bit is cleared	x = Bit is unknown

bit 7-5 **IPL<2:0>:** CPU Interrupt Priority Level Status bits(2,3)
111 = CPU Interrupt Priority Level is 7 (15); user interrupts are disabled
110 = CPU Interrupt Priority Level is 6 (14)
101 = CPU Interrupt Priority Level is 5 (13)
100 = CPU Interrupt Priority Level is 4 (12)
011 = CPU Interrupt Priority Level is 3 (11)
010 = CPU Interrupt Priority Level is 2 (10)
001 = CPU Interrupt Priority Level is 1 (9)
000 = CPU Interrupt Priority Level is 0 (8)

Note 1: For complete register details, see Register 3-1.
2: The IPL<2:0> bits are concatenated with the IPL<3> bit (CORCON<3>) to form the CPU Interrupt Priority Level. The value in parentheses indicates the IPL if IPL<3> = 1. User interrupts are disabled when IPL<3> = 1.
3: The IPL<2:0> Status bits are read-only when NSTDIS (INTCON1<15>) = 1.

REGISTER 7-2: CORCON: CORE CONTROL REGISTER(1)

U-0	U-0	U-0	R/W-0	R/W-0	R-0	R-0	R-0
—	—	—	US	EDT	DL<2:0>		
bit 15							bit 8

R/W-0	R/W-0	R/W-1	R/W-0	R/C-0	R/W-0	R/W-0	R/W-0
SATA	SATB	SATDW	ACCSAT	**IPL3(2)**	PSV	RND	IF
bit 7							bit 0

Legend:	C = Clearable bit		
R = Readable bit	W = Writable bit	U = Unimplemented bit, read as ‘0’	
-n = Value at POR	‘1’ = Bit is set	‘0’ = Bit is cleared	x = Bit is unknown

bit 3 **IPL3:** CPU Interrupt Priority Level Status bit 3(2)
1 = CPU Interrupt Priority Level is greater than 7
0 = CPU Interrupt Priority Level is 7 or less

Note 1: For complete register details, see Register 3-2.
2: The IPL3 bit is concatenated with the IPL<2:0> bits (SR<7:5>) to form the CPU Interrupt Priority Level.

REGISTER 7-3: INTCON1: INTERRUPT CONTROL REGISTER 1

R/W-0	R/W-0	R/W-0	R/W-0	R/W-0	R/W-0	R/W-0	R/W-0
NSTDIS	OVAERR	OVBERR	COVAERR	COVBERR	OVATE	OVBTE	COVTE
bit 15							bit 8

R/W-0	R/W-0	U-0	R/W-0	R/W-0	R/W-0	R/W-0	U-0
SFTACERR	DIV0ERR	—	MATHERR	ADDRERR	STKERR	OSCFAIL	—
bit 7							bit 0

Legend:			
R = Readable bit	W = Writable bit	U = Unimplemented bit, read as ‘0’	
-n = Value at POR	‘1’ = Bit is set	‘0’ = Bit is cleared	x = Bit is unknown

bit 15 **NSTDIS:** Interrupt Nesting Disable bit
1 = Interrupt nesting is disabled
0 = Interrupt nesting is enabled

bit 14 **OVAERR:** Accumulator A Overflow Trap Flag bit
1 = Trap was caused by overflow of Accumulator A
0 = Trap was not caused by overflow of Accumulator A

bit 13 **OVBERR:** Accumulator B Overflow Trap Flag bit
1 = Trap was caused by overflow of Accumulator B
0 = Trap was not caused by overflow of Accumulator B

bit 12 **COVAERR:** Accumulator A Catastrophic Overflow Trap Flag bit
1 = Trap was caused by catastrophic overflow of Accumulator A
0 = Trap was not caused by catastrophic overflow of Accumulator A

bit 11 **COVBERR:** Accumulator B Catastrophic Overflow Trap Flag bit
1 = Trap was caused by catastrophic overflow of Accumulator B
0 = Trap was not caused by catastrophic overflow of Accumulator B

bit 10 **OVATE:** Accumulator A Overflow Trap Enable bit
1 = Trap overflow of Accumulator A
0 = Trap is disabled

bit 9 **OVBTE:** Accumulator B Overflow Trap Enable bit
1 = Trap overflow of Accumulator B
0 = Trap disabled

bit 8 **COVTE:** Catastrophic Overflow Trap Enable bit
1 = Trap on catastrophic overflow of Accumulator A or B enabled
0 = Trap is disabled

bit 7 **SFTACERR:** Shift Accumulator Error Status bit
1 = Math error trap was caused by an invalid accumulator shift
0 = Math error trap was not caused by an invalid accumulator shift

bit 6 **DIV0ERR:** Arithmetic Error Status bit
1 = Math error trap was caused by a divide-by-zero
0 = Math error trap was not caused by a divide-by-zero

bit 5 **Unimplemented:** Read as ‘0’

bit 4 **MATHERR:** Arithmetic Error Status bit
1 = Math error trap has occurred
0 = Math error trap has not occurred

© 2011-2012 Microchip Technology Inc.

REGISTER 7-3: INTCON1: INTERRUPT CONTROL REGISTER 1 (CONTINUED)

bit 3 **ADDRERR:** Address Error Trap Status bit
1 = Address error trap has occurred
0 = Address error trap has not occurred

bit 2 **STKERR:** Stack Error Trap Status bit
1 = Stack error trap has occurred
0 = Stack error trap has not occurred

bit 1 **OSCFAIL:** Oscillator Failure Trap Status bit
1 = Oscillator failure trap has occurred
0 = Oscillator failure trap has not occurred

bit 0 **Unimplemented:** Read as '0'

REGISTER 7-4: INTCON2: INTERRUPT CONTROL REGISTER 2

R/W-0	R-0	U-0	U-0	U-0	U-0	U-0	U-0
ALTIVT	DISI	—	—	—	—	—	—
bit 15							bit 8

U-0	U-0	U-0	U-0	U-0	R/W-0	R/W-0	R/W-0
—	—	—	—	—	INT2EP	INT1EP	INT0EP
bit 7							bit 0

Legend:			
R = Readable bit	W = Writable bit	U = Unimplemented bit, read as ‘0’	
-n = Value at POR	‘1’ = Bit is set	‘0’ = Bit is cleared	x = Bit is unknown

bit 15 **ALTIVT:** Enable Alternate Interrupt Vector Table bit
1 = Uses Alternate Interrupt Vector Table
0 = Uses standard Interrupt Vector Table (default)

bit 14 **DISI:** DISI Instruction Status bit
1 = DISI instruction is active
0 = DISI instruction is not active

bit 13-3 **Unimplemented:** Read as ‘0’

bit 2 **INT2EP:** External Interrupt 2 Edge Detect Polarity Select bit
1 = Interrupt on negative edge
0 = Interrupt on positive edge

bit 1 **INT1EP:** External Interrupt 1 Edge Detect Polarity Select bit
1 = Interrupt on negative edge
0 = Interrupt on positive edge

bit 0 **INT0EP:** External Interrupt 0 Edge Detect Polarity Select bit
1 = Interrupt on negative edge
0 = Interrupt on positive edge

© 2011-2012 Microchip Technology Inc.

REGISTER 7-5: IFS0: INTERRUPT FLAG STATUS REGISTER 0

U-0	U-0	R/W-0	R/W-0	R/W-0	R/W-0	R/W-0	R/W-0
—	—	AD1IF	U1TXIF	U1RXIF	SPI1IF	SPI1EIF	T3IF
bit 15							bit 8

R/W-0	R/W-0	R/W-0	U-0	R/W-0	R/W-0	R/W-0	R/W-0
T2IF	OC2IF	IC2IF	—	T1IF	OC1IF	IC1IF	INT0IF
bit 7							bit 0

Legend:			
R = Readable bit	W = Writable bit	U = Unimplemented bit, read as ‘0’	
-n = Value at POR	‘1’ = Bit is set	‘0’ = Bit is cleared	x = Bit is unknown

bit 15-14 **Unimplemented:** Read as ‘0’

bit 13 **AD1IF:** ADC1 Conversion Complete Interrupt Flag Status bit
1 = Interrupt request has occurred
0 = Interrupt request has not occurred

bit 12 **U1TXIF:** UART1 Transmitter Interrupt Flag Status bit
1 = Interrupt request has occurred
0 = Interrupt request has not occurred

bit 11 **U1RXIF:** UART1 Receiver Interrupt Flag Status bit
1 = Interrupt request has occurred
0 = Interrupt request has not occurred

bit 10 **SPI1IF:** SPI1 Event Interrupt Flag Status bit
1 = Interrupt request has occurred
0 = Interrupt request has not occurred

bit 9 **SPI1EIF:** SPI1 Fault Interrupt Flag Status bit
1 = Interrupt request has occurred
0 = Interrupt request has not occurred

bit 8 **T3IF:** Timer3 Interrupt Flag Status bit
1 = Interrupt request has occurred
0 = Interrupt request has not occurred

bit 7 **T2IF:** Timer2 Interrupt Flag Status bit
1 = Interrupt request has occurred
0 = Interrupt request has not occurred

bit 6 **OC2IF:** Output Compare Channel 2 Interrupt Flag Status bit
1 = Interrupt request has occurred
0 = Interrupt request has not occurred

bit 5 **IC2IF:** Input Capture Channel 2 Interrupt Flag Status bit
1 = Interrupt request has occurred
0 = Interrupt request has not occurred

bit 4 **Unimplemented:** Read as ‘0’

bit 3 **T1IF:** Timer1 Interrupt Flag Status bit
1 = Interrupt request has occurred
0 = Interrupt request has not occurred

REGISTER 7-5: IFS0: INTERRUPT FLAG STATUS REGISTER 0 (CONTINUED)

bit 2 **OC1IF:** Output Compare Channel 1 Interrupt Flag Status bit
1 = Interrupt request has occurred
0 = Interrupt request has not occurred

bit 1 **IC1IF:** Input Capture Channel 1 Interrupt Flag Status bit
1 = Interrupt request has occurred
0 = Interrupt request has not occurred

bit 0 **INT0IF:** External Interrupt 0 Flag Status bit
1 = Interrupt request has occurred
0 = Interrupt request has not occurred

© 2011-2012 Microchip Technology Inc.

REGISTER 7-6: IFS1: INTERRUPT FLAG STATUS REGISTER 1

U-0	U-0	R/W-0	R/W-0	R/W-0	U-0	U-0	U-0
—	—	INT2IF	T5IF(1)	T4IF(1)	—	—	—
bit 15							bit 8

U-0	U-0	U-0	R/W-0	R/W-0	R/W-0	R/W-0	R/W-0
—	—	—	INT1IF	CNIF	CMIF	MI2C1IF	SI2C1IF
bit 7							bit 0

Legend:			
R = Readable bit	W = Writable bit	U = Unimplemented bit, read as ‘0’	
-n = Value at POR	‘1’ = Bit is set	‘0’ = Bit is cleared	x = Bit is unknown

bit 15-14 **Unimplemented:** Read as ‘0’

bit 13 **INT2IF:** External Interrupt 2 Flag Status bit
1 = Interrupt request has occurred
0 = Interrupt request has not occurred

bit 12 **T5IF:** Timer5 Interrupt Flag Status bit(1)
1 = Interrupt request has occurred
0 = Interrupt request has not occurred

bit 11 **T4IF:** Timer4 Interrupt Flag Status bit(1)
1 = Interrupt request has occurred
0 = Interrupt request has not occurred

bit 10-5 **Unimplemented:** Read as ‘0’

bit 4 **INT1IF:** External Interrupt 1 Flag Status bit
1 = Interrupt request has occurred
0 = Interrupt request has not occurred

bit 3 **CNIF:** Input Change Notification Interrupt Flag Status bit
1 = Interrupt request has occurred
0 = Interrupt request has not occurred

bit 2 **CMIF:** Comparator Interrupt Flag Status bit
1 = Interrupt request has occurred
0 = Interrupt request has not occurred

bit 1 **MI2C1IF:** I2C1 Master Events Interrupt Flag Status bit
1 = Interrupt request has occurred
0 = Interrupt request has not occurred

bit 0 **SI2C1IF:** I2C1 Slave Events Interrupt Flag Status bit
1 = Interrupt request has occurred
0 = Interrupt request has not occurred

Note 1: This bit is available in dsPIC33FJ32(GP/MC)10X devices only.

REGISTER 7-7: IFS2: INTERRUPT FLAG STATUS REGISTER 2

U-0	U-0	U-0	U-0	U-0	U-0	U-0	U-0
—	—	—	—	—	—	—	—
bit 15							bit 8

U-0	U-0	R/W-0	U-0	U-0	U-0	U-0	U-0
—	—	IC3IF	—	—	—	—	—
bit 7							bit 0

Legend:			
R = Readable bit	W = Writable bit	U = Unimplemented bit, read as ‘0’	
-n = Value at POR	‘1’ = Bit is set	‘0’ = Bit is cleared	x = Bit is unknown

bit 15-6 **Unimplemented:** Read as ‘0’

bit 5 **IC3IF:** Input Capture Channel 3 Interrupt Flag Status bit
1 = Interrupt request has occurred
0 = Interrupt request has not occurred

bit 4-0 **Unimplemented:** Read as ‘0’

REGISTER 7-8: IFS3: INTERRUPT FLAG STATUS REGISTER 3

R/W-0	R/W-0	U-0	U-0	U-0	U-0	R/W-0	U-0
FLTA1IF(1)	RTCIF	—	—	—	—	PWM1IF(1)	—
bit 15							bit 8

U-0	U-0	U-0	U-0	U-0	U-0	U-0	U-0
—	—	—	—	—	—	—	—
bit 7							bit 0

Legend:			
R = Readable bit	W = Writable bit	U = Unimplemented bit, read as ‘0’	
-n = Value at POR	‘1’ = Bit is set	‘0’ = Bit is cleared	x = Bit is unknown

bit 15 **FLTA1IF:** PWM1 Fault A Interrupt Flag Status bit(1)
1 = Interrupt request has occurred
0 = Interrupt request has not occurred

bit 14 **RTCIF:** RTCC Interrupt Flag Status bit
1 = Interrupt request has occurred
0 = Interrupt request has not occurred

bit 13-10 **Unimplemented:** Read as ‘0’

bit 9 **PWM1IF:** PWM1 Interrupt Flag Status bit(1)
1 = Interrupt request has occurred
0 = Interrupt request has not occurred

bit 8-0 **Unimplemented:** Read as ‘0’

Note 1: This bit is available in dsPIC(16/32)MC10X devices only.

© 2011-2012 Microchip Technology Inc.

REGISTER 7-9: IFS4: INTERRUPT FLAG STATUS REGISTER 4

U-0	U-0	R/W-0	U-0	U-0	U-0	U-0	U-0
—	—	CTMUIF	—	—	—	—	—
bit 15							bit 8

U-0	U-0	U-0	U-0	U-0	U-0	R/W-0	R/W-0
—	—	—	—	—	—	U1EIF	FLTB1IF(1)
bit 7							bit 0

Legend:			
R = Readable bit	W = Writable bit	U = Unimplemented bit, read as ‘0’	
-n = Value at POR	‘1’ = Bit is set	‘0’ = Bit is cleared	x = Bit is unknown

bit 15-14 **Unimplemented:** Read as ‘0’

bit 13 **CTMUIF:** CTMU Interrupt Flag Status bit
1 = Interrupt request has occurred
0 = Interrupt request has not occurred

bit 12-2 **Unimplemented:** Read as ‘0’

bit 1 **U1EIF:** UART1 Error Interrupt Flag Status bit
1 = Interrupt request has occurred
0 = Interrupt request has not occurred

bit 0 **FLTB1IF:** PWM1 Fault B Interrupt Flag Status bit(1)
1 = Interrupt request has occurred
0 = Interrupt request has not occurred

Note 1: This bit is available in dsPIC(16/32)MC102/104 devices only.

REGISTER 7-10: IEC0: INTERRUPT ENABLE CONTROL REGISTER 0

U-0	U-0	R/W-0	R/W-0	R/W-0	R/W-0	R/W-0	R/W-0
—	—	AD1IE	U1TXIE	U1RXIE	SPI1IE	SPI1EIE	T3IE
bit 15							bit 8

R/W-0	R/W-0	R/W-0	U-0	R/W-0	R/W-0	R/W-0	R/W-0
T2IE	OC2IE	IC2IE	—	T1IE	OC1IE	IC1IE	INT0IE
bit 7							bit 0

Legend:			
R = Readable bit	W = Writable bit	U = Unimplemented bit, read as ‘0’	
-n = Value at POR	‘1’ = Bit is set	‘0’ = Bit is cleared	x = Bit is unknown

bit 15-14 **Unimplemented:** Read as ‘0’

bit 13 **AD1IE:** ADC1 Conversion Complete Interrupt Enable bit
1 = Interrupt request is enabled
0 = Interrupt request is not enabled

bit 12 **U1TXIE:** UART1 Transmitter Interrupt Enable bit
1 = Interrupt request is enabled
0 = Interrupt request is not enabled

bit 11 **U1RXIE:** UART1 Receiver Interrupt Enable bit
1 = Interrupt request is enabled
0 = Interrupt request is not enabled

bit 10 **SPI1IE:** SPI1 Event Interrupt Enable bit
1 = Interrupt request is enabled
0 = Interrupt request is not enabled

bit 9 **SPI1EIE:** SPI1 Event Interrupt Enable bit
1 = Interrupt request is enabled
0 = Interrupt request is not enabled

bit 8 **T3IE:** Timer3 Interrupt Enable bit
1 = Interrupt request is enabled
0 = Interrupt request is not enabled

bit 7 **T2IE:** Timer2 Interrupt Enable bit
1 = Interrupt request is enabled
0 = Interrupt request is not enabled

bit 6 **OC2IE:** Output Compare Channel 2 Interrupt Enable bit
1 = Interrupt request is enabled
0 = Interrupt request is not enabled

bit 5 **IC2IE:** Input Capture Channel 2 Interrupt Enable bit
1 = Interrupt request is enabled
0 = Interrupt request is not enabled

bit 4 **Unimplemented:** Read as ‘0’

bit 3 **T1IE:** Timer1 Interrupt Enable bit
1 = Interrupt request is enabled
0 = Interrupt request is not enabled

bit 2 **OC1IE:** Output Compare Channel 1 Interrupt Enable bit
1 = Interrupt request is enabled
0 = Interrupt request is not enabled

bit 1 **IC1IE:** Input Capture Channel 1 Interrupt Enable bit
1 = Interrupt request is enabled
0 = Interrupt request is not enabled

bit 0 **INT0IE:** External Interrupt 0 Enable bit
1 = Interrupt request is enabled
0 = Interrupt request is not enabled

© 2011-2012 Microchip Technology Inc.

REGISTER 7-11: IEC1: INTERRUPT ENABLE CONTROL REGISTER 1

U-0	U-0	R/W-0	R/W-0	R/W-0	U-0	U-0	U-0
—	—	INT2IE	T5IE(1)	T4IE(1)	—	—	—
bit 15							bit 8

U-0	U-0	U-0	U-0	U-0	R/W-0	R/W-0	R/W-0
—	—	—	INT1IE	CNIE	CMIE	MI2C1IE	SI2C1IE
bit 7							bit 0

Legend:			
R = Readable bit	W = Writable bit	U = Unimplemented bit, read as ‘0’	
-n = Value at POR	‘1’ = Bit is set	‘0’ = Bit is cleared	x = Bit is unknown

bit 15-14 **Unimplemented:** Read as ‘0’

bit 13 **INT2IE:** External Interrupt 2 Enable bit
1 = Interrupt request is enabled
0 = Interrupt request is not enabled

bit 12 **T5IE:** Timer5 Interrupt Enable bit(1)
1 = Interrupt request has occurred
0 = Interrupt request has not occurred

bit 11 **T4IE:** Timer4 Interrupt Enable bit(1)
1 = Interrupt request has occurred
0 = Interrupt request has not occurred

bit 10-5 **Unimplemented:** Read as ‘0’

bit 4 **INT1IE:** External Interrupt 1 Enable bit
1 = Interrupt request is enabled
0 = Interrupt request is not enabled

bit 3 **CNIE:** Input Change Notification Interrupt Enable bit
1 = Interrupt request is enabled
0 = Interrupt request is not enabled

bit 2 **CMIE:** Comparator Interrupt Enable bit
1 = Interrupt request is enabled
0 = Interrupt request is not enabled

bit 1 **MI2C1IE:** I2C1 Master Events Interrupt Enable bit
1 = Interrupt request is enabled
0 = Interrupt request is not enabled

bit 0 **SI2C1IE:** I2C1 Slave Events Interrupt Enable bit
1 = Interrupt request is enabled
0 = Interrupt request is not enabled

Note 1: This bit is available in dsPIC33FJ32(GP/MC)10X devices only.

REGISTER 7-12: IEC2: INTERRUPT ENABLE CONTROL REGISTER 2

U-0	U-0	U-0	U-0	U-0	U-0	U-0	U-0
—	—	—	—	—	—	—	—
bit 15							bit 8

U-0	U-0	R/W-0	U-0	U-0	U-0	U-0	U-0
—	—	IC3IE	—	—	—	—	—
bit 7							bit 0

Legend:			
R = Readable bit	W = Writable bit	U = Unimplemented bit, read as ‘0’	
-n = Value at POR	‘1’ = Bit is set	‘0’ = Bit is cleared	x = Bit is unknown

bit 15-6 **Unimplemented:** Read as ‘0’

bit 5 **IC3IE:** Input Capture Channel 3 Interrupt Enable bit
1 = Interrupt request is enabled
0 = Interrupt request is not enabled

bit 4-0 **Unimplemented:** Read as ‘0’

REGISTER 7-13: IEC3: INTERRUPT ENABLE CONTROL REGISTER 3

R/W-0	R/W-0	U-0	U-0	U-0	U-0	R/W-0	U-0
FLTA1IE(1)	RTCIE	—	—	—	—	PWM1IE(1)	—
bit 15							bit 8

U-0	U-0	U-0	U-0	U-0	U-0	U-0	U-0
—	—	—	—	—	—	—	—
bit 7							bit 0

Legend:			
R = Readable bit	W = Writable bit	U = Unimplemented bit, read as ‘0’	
-n = Value at POR	‘1’ = Bit is set	‘0’ = Bit is cleared	x = Bit is unknown

bit 15 **FLTA1IE:** PWM1 Fault A Interrupt Enable bit(1)
1 = Interrupt request is enabled
0 = Interrupt request is not enabled

bit 14 **RTCIE:** RTCC Interrupt Enable bit
1 = Interrupt request is enabled
0 = Interrupt request is not enabled

bit 13-10 **Unimplemented:** Read as ‘0’

bit 9 **PWM1IE:** PWM1 Interrupt Enable bit(1)
1 = Interrupt request is enabled
0 = Interrupt request is not enabled

bit 8-0 **Unimplemented:** Read as ‘0’

Note 1: This bit is available in dsPIC(16/32)MC10X devices only.

© 2011-2012 Microchip Technology Inc.

REGISTER 7-14: IEC4: INTERRUPT ENABLE CONTROL REGISTER 4

U-0	U-0	R/W-0	U-0	U-0	U-0	U-0	U-0
—	—	CTMUIE	—	—	—	—	—
bit 15							bit 8

U-0	U-0	U-0	U-0	U-0	U-0	R/W-0	R/W-0
—	—	—	—	—	—	U1EIE	FLTB1IE(1)
bit 7							bit 0

Legend:			
R = Readable bit	W = Writable bit	U = Unimplemented bit, read as ‘0’	
-n = Value at POR	‘1’ = Bit is set	‘0’ = Bit is cleared	x = Bit is unknown

bit 15-14 **Unimplemented:** Read as ‘0’

bit 13 **CTMUIE:** CTMU Interrupt Enable bit
1 = Interrupt request is enabled
0 = Interrupt request is not enabled

bit 12-2 **Unimplemented:** Read as ‘0’

bit 1 **U1EIE:** UART1 Error Interrupt Enable bit
1 = Interrupt request is enabled
0 = Interrupt request is not enabled

bit 0 **FLTB1IE:** PWM1 Fault B Interrupt Enable bit(1)
1 = Interrupt request has occurred
0 = Interrupt request has not occurred

Note 1: This bit is available in dsPIC(16/32)MC102/104 devices only.

REGISTER 7-15: IPC0: INTERRUPT PRIORITY CONTROL REGISTER 0

U-0	R/W-1	R/W-0	R/W-0	U-0	R/W-1	R/W-0	R/W-0
—	T1IP<2:0>			—	OC1IP<2:0>		
bit 15							bit 8

U-0	R/W-1	R/W-0	R/W-0	U-0	R/W-1	R/W-0	R/W-0
—	IC1IP<2:0>			—	INT0IP<2:0>		
bit 7							bit 0

Legend:			
R = Readable bit	W = Writable bit	U = Unimplemented bit, read as ‘0’	
-n = Value at POR	‘1’ = Bit is set	‘0’ = Bit is cleared	x = Bit is unknown

bit 15 **Unimplemented:** Read as ‘0’

bit 14-12 **T1IP<2:0>:** Timer1 Interrupt Priority bits
111 = Interrupt is Priority 7 (highest priority interrupt)
•
•
•
001 = Interrupt is Priority 1
000 = Interrupt source is disabled

bit 11 **Unimplemented:** Read as ‘0’

bit 10-8 **OC1IP<2:0>:** Output Compare Channel 1 Interrupt Priority bits
111 = Interrupt is Priority 7 (highest priority interrupt)
•
•
•
001 = Interrupt is Priority 1
000 = Interrupt source is disabled

bit 7 **Unimplemented:** Read as ‘0’

bit 6-4 **IC1IP<2:0>:** Input Capture Channel 1 Interrupt Priority bits
111 = Interrupt is Priority 7 (highest priority interrupt)
•
•
•
001 = Interrupt is Priority 1
000 = Interrupt source is disabled

bit 3 **Unimplemented:** Read as ‘0’

bit 2-0 **INT0IP<2:0>:** External Interrupt 0 Priority bits
111 = Interrupt is Priority 7 (highest priority interrupt)
•
•
•
001 = Interrupt is Priority 1
000 = Interrupt source is disabled

© 2011-2012 Microchip Technology Inc.

REGISTER 7-16: IPC1: INTERRUPT PRIORITY CONTROL REGISTER 1

U-0	R/W-1	R/W-0	R/W-0	U-0	R/W-1	R/W-0	R/W-0
—	T2IP<2:0>			—	OC2IP<2:0>		
bit 15							bit 8

U-0	R/W-1	R/W-0	R/W-0	U-0	U-0	U-0	U-0
—	IC2IP<2:0>			—	—	—	—
bit 7							bit 0

Legend:			
R = Readable bit	W = Writable bit	U = Unimplemented bit, read as ‘0’	
-n = Value at POR	‘1’ = Bit is set	‘0’ = Bit is cleared	x = Bit is unknown

bit 15 **Unimplemented:** Read as ‘0’

bit 14-12 **T2IP<2:0>:** Timer2 Interrupt Priority bits
111 = Interrupt is Priority 7 (highest priority interrupt)
•
•
•
001 = Interrupt is Priority 1
000 = Interrupt source is disabled

bit 11 **Unimplemented:** Read as ‘0’

bit 10-8 **OC2IP<2:0>:** Output Compare Channel 2 Interrupt Priority bits
111 = Interrupt is Priority 7 (highest priority interrupt)
•
•
•
001 = Interrupt is Priority 1
000 = Interrupt source is disabled

bit 7 **Unimplemented:** Read as ‘0’

bit 6-4 **IC2IP<2:0>:** Input Capture Channel 2 Interrupt Priority bits
111 = Interrupt is Priority 7 (highest priority interrupt)
•
•
•
001 = Interrupt is Priority 1
000 = Interrupt source is disabled

bit 3-0 **Unimplemented:** Read as ‘0’

REGISTER 7-17: IPC2: INTERRUPT PRIORITY CONTROL REGISTER 2

U-0	R/W-1	R/W-0	R/W-0	U-0	R/W-1	R/W-0	R/W-0
—	U1RXIP<2:0>			—	SPI1IP<2:0>		
bit 15							bit 8

U-0	R/W-1	R/W-0	R/W-0	U-0	R/W-1	R/W-0	R/W-0
—	SPI1EIP<2:0>			—	T3IP<2:0>		
bit 7							bit 0

Legend:			
R = Readable bit	W = Writable bit	U = Unimplemented bit, read as ‘0’	
-n = Value at POR	‘1’ = Bit is set	‘0’ = Bit is cleared	x = Bit is unknown

bit 15 **Unimplemented:** Read as ‘0’

bit 14-12 **U1RXIP<2:0>:** UART1 Receiver Interrupt Priority bits
111 = Interrupt is Priority 7 (highest priority interrupt)
•
•
•
001 = Interrupt is Priority 1
000 = Interrupt source is disabled

bit 11 **Unimplemented:** Read as ‘0’

bit 10-8 **SPI1IP<2:0>:** SPI1 Event Interrupt Priority bits
111 = Interrupt is Priority 7 (highest priority interrupt)
•
•
•
001 = Interrupt is Priority 1
000 = Interrupt source is disabled

bit 7 **Unimplemented:** Read as ‘0’

bit 6-4 **SPI1EIP<2:0>:** SPI1 Error Interrupt Priority bits
111 = Interrupt is Priority 7 (highest priority interrupt)
•
•
•
001 = Interrupt is Priority 1
000 = Interrupt source is disabled

bit 3 **Unimplemented:** Read as ‘0’

bit 2-0 **T3IP<2:0>:** Timer3 Interrupt Priority bits
111 = Interrupt is Priority 7 (highest priority interrupt)
•
•
•
001 = Interrupt is Priority 1
000 = Interrupt source is disabled

© 2011-2012 Microchip Technology Inc.

REGISTER 7-18: IPC3: INTERRUPT PRIORITY CONTROL REGISTER 3

U-0	U-0	U-0	U-0	U-0	U-0	U-0	U-0
—	—	—	—	—	—	—	—
bit 15							bit 8

U-0	R/W-1	R/W-0	R/W-0	U-0	R/W-1	R/W-0	R/W-0
—	AD1IP<2:0>			—	U1TXIP<2:0>		
bit 7							bit 0

Legend:			
R = Readable bit	W = Writable bit	U = Unimplemented bit, read as ‘0’	
-n = Value at POR	‘1’ = Bit is set	‘0’ = Bit is cleared	x = Bit is unknown

bit 15-7 **Unimplemented:** Read as ‘0’

bit 6-4 **AD1IP<2:0>:** ADC1 Conversion Complete Interrupt Priority bits
111 = Interrupt is Priority 7 (highest priority interrupt)
•
•
•
001 = Interrupt is Priority 1
000 = Interrupt source is disabled

bit 3 **Unimplemented:** Read as ‘0’

bit 2-0 **U1TXIP<2:0>:** UART1 Transmitter Interrupt Priority bits
111 = Interrupt is Priority 7 (highest priority interrupt)
•
•
•
001 = Interrupt is Priority 1
000 = Interrupt source is disabled

REGISTER 7-19: IPC4: INTERRUPT PRIORITY CONTROL REGISTER 4

U-0	R/W-1	R/W-0	R/W-0	U-0	R/W-1	R/W-0	R/W-0
—	CNIP<2:0>			—	CMIP<2:0>		
bit 15							bit 8

U-0	R/W-1	R/W-0	R/W-0	U-0	R/W-1	R/W-0	R/W-0
—	MI2C1IP<2:0>			—	SI2C1IP<2:0>		
bit 7							bit 0

Legend:			
R = Readable bit	W = Writable bit	U = Unimplemented bit, read as ‘0’	
-n = Value at POR	‘1’ = Bit is set	‘0’ = Bit is cleared	x = Bit is unknown

bit 15 **Unimplemented:** Read as ‘0’

bit 14-12 **CNIP<2:0>:** Change Notification Interrupt Priority bits
111 = Interrupt is Priority 7 (highest priority interrupt)
•
•
•
001 = Interrupt is Priority 1
000 = Interrupt source is disabled

bit 11 **Unimplemented:** Read as ‘0’

bit 10-8 **CMIP<2:0>:** Comparator Interrupt Priority bits
111 = Interrupt is Priority 7 (highest priority interrupt)
•
•
•
001 = Interrupt is Priority 1
000 = Interrupt source is disabled

bit 7 **Unimplemented:** Read as ‘0’

bit 6-4 **MI2C1IP<2:0>:** I2C1 Master Events Interrupt Priority bits
111 = Interrupt is Priority 7 (highest priority interrupt)
•
•
•
001 = Interrupt is Priority 1
000 = Interrupt source is disabled

bit 3 **Unimplemented:** Read as ‘0’

bit 2-0 **SI2C1IP<2:0>:** I2C1 Slave Events Interrupt Priority bits
111 = Interrupt is Priority 7 (highest priority interrupt)
•
•
•
001 = Interrupt is Priority 1
000 = Interrupt source is disabled

© 2011-2012 Microchip Technology Inc.

REGISTER 7-20: IPC5: INTERRUPT PRIORITY CONTROL REGISTER 5

U-0	U-0	U-0	U-0	U-0	U-0	U-0	U-0
—	—	—	—	—	—	—	—
bit 15							bit 8

U-0	U-0	U-0	U-0	U-0	R/W-1	R/W-0	R/W-0
—	—	—	—	—	INT1IP<2:0>		
bit 7							bit 0

Legend:			
R = Readable bit	W = Writable bit	U = Unimplemented bit, read as ‘0’	
-n = Value at POR	‘1’ = Bit is set	‘0’ = Bit is cleared	x = Bit is unknown

bit 15-3 **Unimplemented:** Read as ‘0’

bit 2-0 **INT1IP<2:0>:** External Interrupt 1 Priority bits
111 = Interrupt is Priority 7 (highest priority interrupt)
•
•
•
001 = Interrupt is Priority 1
000 = Interrupt source is disabled

REGISTER 7-21: IPC6: INTERRUPT PRIORITY CONTROL REGISTER 6

U-0	R/W-1	R/W-0	R/W-0	U-0	U-0	U-0	U-0
—	T4IP<2:0>(1)			—	—	—	—
bit 15							bit 8

U-0	U-0	U-0	U-0	U-0	U-0	U-0	U-0
—	—	—	—	—	—	—	—
bit 7							bit 0

Legend:			
R = Readable bit	W = Writable bit	U = Unimplemented bit, read as ‘0’	
-n = Value at POR	‘1’ = Bit is set	‘0’ = Bit is cleared	x = Bit is unknown

bit 15 **Unimplemented:** Read as ‘0’

bit 14-12 **T4IP<2:0>:** Timer4 Interrupt Priority bits(1)
111 = Interrupt is Priority 7 (highest priority interrupt)
•
•
•
001 = Interrupt is Priority 1
000 = Interrupt source is disabled

bit 11-0 **Unimplemented:** Read as ‘0’

Note 1: These bits are available in dsPIC33FJ32(GP/MC)10X devices only.

REGISTER 7-22: IPC7: INTERRUPT PRIORITY CONTROL REGISTER 7

U-0	U-0	U-0	U-0	U-0	U-0	U-0	U-0
—	—	—	—	—	—	—	—
bit 15							bit 8

U-0	R/W-1	R/W-0	R/W-0	U-0	R/W-1	R/W-0	R/W-0
—	INT2IP<2:0>			—	T5IP<2:0>(1)		
bit 7							bit 0

Legend:			
R = Readable bit	W = Writable bit	U = Unimplemented bit, read as ‘0’	
-n = Value at POR	‘1’ = Bit is set	‘0’ = Bit is cleared	x = Bit is unknown

bit 15-7 **Unimplemented:** Read as ‘0’

bit 6-4 **INT2IP<2:0>:** External Interrupt 2 Priority bits
111 = Interrupt is Priority 7 (highest priority interrupt)
•
•
•
001 = Interrupt is Priority 1
000 = Interrupt source is disabled

bit 3 **Unimplemented:** Read as ‘0’

bit 2-0 **T5IP<2:0>:** Timer5 Interrupt Priority bits(1)
111 = Interrupt is Priority 7 (highest priority interrupt)
•
•
•
001 = Interrupt is Priority 1
000 = Interrupt source is disabled

Note 1: These bits are available in dsPIC33FJ32(GP/MC)10X devices only.

© 2011-2012 Microchip Technology Inc.

REGISTER 7-23: IPC9: INTERRUPT PRIORITY CONTROL REGISTER 9

U-0	U-0	U-0	U-0	U-0	U-0	U-0	U-0
—	—	—	—	—	—	—	—
bit 15							bit 8

U-0	R/W-1	R/W-0	R/W-0	U-0	U-0	U-0	U-0
—	IC3IP<2:0>			—	—	—	—
bit 7							bit 0

Legend:			
R = Readable bit	W = Writable bit	U = Unimplemented bit, read as ‘0’	
-n = Value at POR	‘1’ = Bit is set	‘0’ = Bit is cleared	x = Bit is unknown

bit 15-7 **Unimplemented:** Read as ‘0’

bit 6-4 **IC3IP<2:0>:** External Interrupt 3 Priority bits
111 = Interrupt is Priority 7 (highest priority interrupt)
•
•
•
001 = Interrupt is Priority 1
000 = Interrupt source is disabled

bit 3-0 **Unimplemented:** Read as ‘0’

REGISTER 7-24: IPC14: INTERRUPT PRIORITY CONTROL REGISTER 14

U-0	U-0	U-0	U-0	U-0	U-0	U-0	U-0
—	—	—	—	—	—	—	—
bit 15							bit 8

U-0	R/W-1	R/W-0	R/W-0	U-0	U-0	U-0	U-0
—	PWM1IP<2:0>(1)			—	—	—	—
bit 7							bit 0

Legend:			
R = Readable bit	W = Writable bit	U = Unimplemented bit, read as ‘0’	
-n = Value at POR	‘1’ = Bit is set	‘0’ = Bit is cleared	x = Bit is unknown

bit 15-7 **Unimplemented:** Read as ‘0’

bit 6-4 **PWM1IP<2:0>:** PWM1 Interrupt Priority bits(1)
111 = Interrupt is Priority 7 (highest priority interrupt)
•
•
•
001 = Interrupt is Priority 1
000 = Interrupt source is disabled

bit 3-0 **Unimplemented:** Read as ‘0’

Note 1: These bits are available in dsPIC(16/32)MC10X devices only.

REGISTER 7-25: IPC15: INTERRUPT PRIORITY CONTROL REGISTER 15

U-0	R/W-1	R/W-0	R/W-0	U-0	R/W-1	R/W-0	R/W-0
—	FLTA1IP<2:0>(1)			—	RTCIP<2:0>		
bit 15							bit 8

U-0	U-0	U-0	U-0	U-0	U-0	U-0	U-0
—	—	—	—	—	—	—	—
bit 7							bit 0

Legend:			
R = Readable bit	W = Writable bit	U = Unimplemented bit, read as ‘0’	
-n = Value at POR	‘1’ = Bit is set	‘0’ = Bit is cleared	x = Bit is unknown

bit 15 **Unimplemented:** Read as ‘0’

bit 14-12 **FLTA1IP<2:0>:** PWM1 Fault A Interrupt Priority bits(1)

111 = Interrupt is Priority 7 (highest priority interrupt)
•
•
•
001 = Interrupt is Priority 1
000 = Interrupt source is disabled

bit 11 **Unimplemented:** Read as ‘0’

bit 10-8 **RTCIP<2:0>:** RTCC Interrupt Priority bits

111 = Interrupt is Priority 7 (highest priority interrupt)
•
•
•
001 = Interrupt is Priority 1
000 = Interrupt source is disabled

bit 7-0 **Unimplemented:** Read as ‘0’

Note 1: These bits are available in dsPIC(16/32)MC10X devices only.

© 2011-2012 Microchip Technology Inc.

REGISTER 7-26: IPC16: INTERRUPT PRIORITY CONTROL REGISTER 16

U-0	U-0	U-0	U-0	U-0	U-0	U-0	U-0
—	—	—	—	—	—	—	—
bit 15							bit 8

U-0	R/W-1	R/W-0	R/W-0	U-0	R/W-0	R/W-0	R/W-0
—	U1EIP<2:0>			—	FLTB1IP<2:0>(1)		
bit 7							bit 0

Legend:			
R = Readable bit	W = Writable bit	U = Unimplemented bit, read as ‘0’	
-n = Value at POR	‘1’ = Bit is set	‘0’ = Bit is cleared	x = Bit is unknown

bit 15-7 **Unimplemented:** Read as ‘0’

bit 6-4 **U1EIP<2:0>:** UART1 Error Interrupt Priority bits
111 = Interrupt is Priority 7 (highest priority interrupt)
•
•
•
001 = Interrupt is Priority 1
000 = Interrupt source is disabled

bit 3 **Unimplemented:** Read as ‘0’

bit 2-0 **FLTB1IP<2:0>:** PWM1 Fault B Interrupt Priority bits(1)
111 = Interrupt is Priority 7 (highest priority interrupt)
•
•
•
001 = Interrupt is Priority 1
000 = Interrupt source is disabled

Note 1: These bits are available in dsPIC(16/32)MC102/104 devices only.

REGISTER 7-27: IPC19: INTERRUPT PRIORITY CONTROL REGISTER 19

U-0	U-0	U-0	U-0	U-0	U-0	U-0	U-0
—	—	—	—	—	—	—	—
bit 15							bit 8

U-0	R/W-1	R/W-0	R/W-0	U-0	U-0	U-0	U-0
—	CTMUIP<2:0>			—	—	—	—
bit 7							bit 0

Legend:			
R = Readable bit	W = Writable bit	U = Unimplemented bit, read as ‘0’	
-n = Value at POR	‘1’ = Bit is set	‘0’ = Bit is cleared	x = Bit is unknown

bit 15-7 **Unimplemented:** Read as ‘0’

bit 6-4 **CTMUIP<2:0>:** CTMU Interrupt Priority bits
111 = Interrupt is Priority 7 (highest priority interrupt)
•
•
•
001 = Interrupt is Priority 1
000 = Interrupt source is disabled

bit 3-0 **Unimplemented:** Read as ‘0’

© 2011-2012 Microchip Technology Inc.

REGISTER 7-28: INTTREG: INTERRUPT CONTROL AND STATUS REGISTER

U-0	U-0	U-0	U-0	R-0	R-0	R-0	R-0
—	—	—	—	ILR<3:0>			
bit 15							bit 8

U-0	R-0	R-0	R-0	R-0	R-0	R-0	R-0
—	VECNUM<6:0>						
bit 7							bit 0

Legend:			
R = Readable bit	W = Writable bit	U = Unimplemented bit, read as ‘0’	
-n = Value at POR	‘1’ = Bit is set	‘0’ = Bit is cleared	x = Bit is unknown

bit 15-12 **Unimplemented:** Read as ‘0’

bit 11-8 **ILR<3:0>:** New CPU Interrupt Priority Level bits
1111 = CPU Interrupt Priority Level is 15
•
•
•
0001 = CPU Interrupt Priority Level is 1
0000 = CPU Interrupt Priority Level is 0

bit 7 **Unimplemented:** Read as ‘0’

bit 6-0 **VECNUM<6:0>:** Vector Number of Pending Interrupt bits
0111111 = Interrupt Vector pending is Number 135
•
•
•
0000001 = Interrupt Vector pending is Number 9
0000000 = Interrupt Vector pending is Number 8

7.4 Interrupt Setup Procedures

7.4.1 INITIALIZATION

To configure an interrupt source at initialization:

1. Set the NSTDIS bit (INTCON1<15>) if nested interrupts are not desired.
2. Select the user-assigned priority level for the interrupt source by writing the control bits into the appropriate IPCx register. The priority level will depend on the specific application and type of interrupt source. If multiple priority levels are not desired, the IPCx register control bits for all enabled interrupt sources can be programmed to the same non-zero value.

Note:	At a device Reset, the IPCx registers are initialized such that all user interrupt sources are assigned to Priority Level 4.

3. Clear the interrupt flag status bit associated with the peripheral in the associated IFSx register.
4. Enable the interrupt source by setting the interrupt enable control bit associated with the source in the appropriate IECx register.

7.4.2 INTERRUPT SERVICE ROUTINE

The method used to declare an ISR and initialize the IVT with the correct vector address depends on the programming language (C or assembler) and the language development toolsuite used to develop the application.

In general, the user application must clear the interrupt flag in the appropriate IFSx register for the source of interrupt that the ISR handles. Otherwise, program will re-enter the ISR immediately after exiting the routine. If the ISR is coded in assembly language, it must be terminated using a `RETFIE` instruction to unstack the saved PC value, SRL value and old CPU priority level.

7.4.3 TRAP SERVICE ROUTINE

A Trap Service Routine (TSR) is coded like an ISR, except that the appropriate trap status flag in the INTCON1 register must be cleared to avoid re-entry into the TSR.

7.4.4 INTERRUPT DISABLE

All user interrupts can be disabled using this procedure:

1. Push the current SR value onto the software stack using the `PUSH` instruction.
2. Force the CPU to Priority Level 7 by inclusive ORing the value OEh with SRL.

To enable user interrupts, the `POP` instruction can be used to restore the previous SR value.

Note:	Only user interrupts with a priority level of 7 or lower can be disabled. Trap sources (Level 8-Level 15) cannot be disabled.

The `DISI` instruction provides a convenient way to disable interrupts of Priority Levels 1-6 for a fixed period of time. Level 7 interrupt sources are not disabled by the `DISI` instruction.

© 2011-2012 Microchip Technology Inc.

8.0 OSCILLATOR CONFIGURATION

Note 1: This data sheet summarizes the features of the dsPIC33FJ16(GP/MC)101/102 and dsPIC33FJ32(GP/MC)101/102/104 family devices. It is not intended to be a comprehensive reference source. To complement the information in this data sheet, refer to **Section 52. "Oscillator (Part VI)"** (DS70644) in the *"dsPIC33F/PIC24H Family Reference Manual"*, which is available from the Microchip web site (www.microchip.com).

2: Some registers and associated bits described in this section may not be available on all devices. Refer to **Section 4.0 "Memory Organization"** in this data sheet for device-specific register and bit information.

The oscillator system for dsPIC33FJ16(GP/MC)101/102 and dsPIC33FJ32(GP/MC)101/102/104 devices provides:

- External and internal oscillator options as clock sources
- An on-chip, 4x Phase Lock Loop (PLL) to scale the internal operating frequency to the required system clock frequency
- An internal FRC oscillator that can also be used with the PLL, thereby allowing full-speed operation without any external clock generation hardware
- Clock switching between various clock sources
- Programmable clock postscaler for system power savings
- A Fail-Safe Clock Monitor (FSCM) that detects clock failure and takes fail-safe measures
- A Clock Control register (OSCCON)
- Nonvolatile Configuration bits for main oscillator selection

A simplified diagram of the oscillator system is shown in Figure 8-1.

FIGURE 8-1: OSCILLATOR SYSTEM DIAGRAM

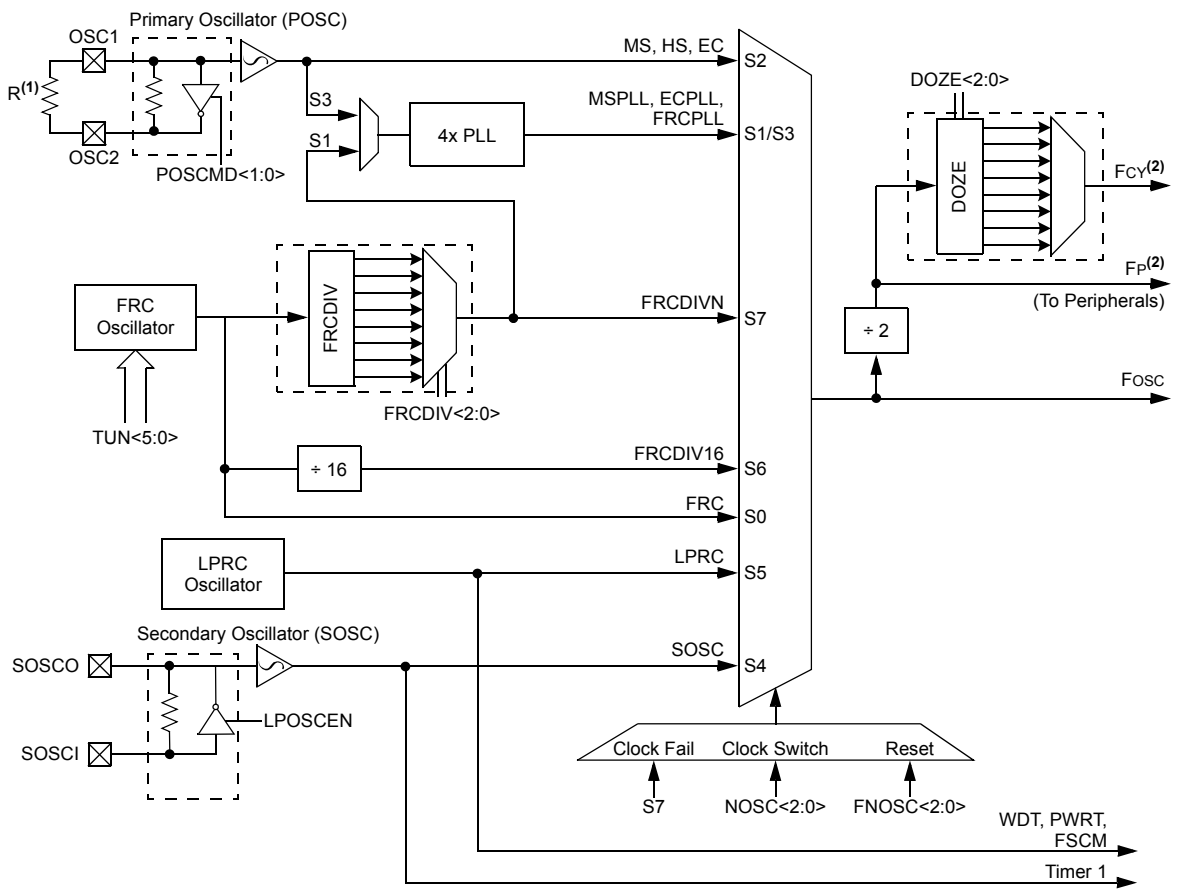

Note 1: If the oscillator is used with MS or HS modes, an extended parallel resistor with the value of 1 MΩ must be connected.

2: The term, FP, refers to the clock source for all peripherals, while FCY refers to the clock source for the CPU. Throughout this document, FCY and FP are used interchangeably, except in the case of Doze mode. FP and FCY will be different when Doze mode is used with a Doze ratio of 1:2 or lower.

8.1 CPU Clocking System

The dsPIC33FJ16(GP/MC)101/102 and dsPIC33FJ32(GP/MC)101/102/104 devices provide seven system clock options:

- Fast RC (FRC) Oscillator
- FRC Oscillator with 4x PLL
- Primary (MS, HS or EC) Oscillator
- Primary Oscillator with 4x PLL
- Secondary (LP) Oscillator
- Low-Power RC (LPRC) Oscillator
- FRC Oscillator with postscaler

8.1.1 SYSTEM CLOCK SOURCES

8.1.1.1 Fast RC

The Fast RC (FRC) internal oscillator runs at a nominal frequency of 7.37 MHz. User software can tune the FRC frequency. User software can optionally specify a factor (ranging from 1:2 to 1:256) by which the FRC clock frequency is divided. This factor is selected using the FRCDIV<2:0> (CLKDIV<10:8>) bits.

The FRC frequency depends on the FRC accuracy (see Table 26-18) and the value of the FRC Oscillator Tuning register (see Register 8-3).

8.1.1.2 Primary

The primary oscillator can use one of the following as its clock source:

- MS (Crystal): Crystals and ceramic resonators in the range of 4 MHz to 10 MHz. The crystal is connected to the OSC1 and OSC2 pins.
- HS (High-Speed Crystal): Crystals in the range of 10 MHz to 32 MHz. The crystal is connected to the OSC1 and OSC2 pins.
- EC (External Clock): The external clock signal is directly applied to the OSC1 pin.

8.1.1.3 Secondary

The secondary (LP) oscillator is designed for low power and uses a 32.768 kHz crystal or ceramic resonator. The LP oscillator uses the SOSCI and SOSCO pins.

8.1.1.4 Low-Power RC

The Low-Power RC (LPRC) internal oscIllator runs at a nominal frequency of 32.768 kHz. It is also used as a reference clock by the Watchdog Timer (WDT) and Fail-Safe Clock Monitor (FSCM).

8.1.1.5 PLL

The clock signals generated by the FRC and primary oscillators can be optionally applied to an on-chip, 4x Phase Lock Loop (PLL) to provide faster output frequencies for device operation. PLL configuration is described in **Section 8.1.3 “PLL Configuration”**.

8.1.2 SYSTEM CLOCK SELECTION

The oscillator source used at a device Power-on Reset event is selected using Configuration bit settings. The Oscillator Configuration bit settings are located in the Configuration registers in the program memory. (Refer to **Section 23.1 “Configuration Bits”** for further details.) The initial Oscillator Selection Configuration bits, FNOSC<2:0> (FOSCSEL<2:0>), and the Primary Oscillator Mode Select Configuration bits, POSCMD<1:0> (FOSC<1:0>), select the oscillator source that is used at a Power-on Reset. The FRC primary oscillator is the default (unprogrammed) selection.

The Configuration bits allow users to choose among 12 different clock modes, shown in Table 8-1.

The output of the oscillator (or the output of the PLL if a PLL mode has been selected) FOSC is divided by 2 to generate the device instruction clock (FCY) and the peripheral clock time base (FP). FCY defines the operating speed of the device, and speeds up to 16 MHz are supported by the dsPIC33FJ16(GP/MC)101/102 and dsPIC33FJ32(GP/MC)101/102/104 architecture.

Instruction execution speed or device operating frequency, FCY, is given by:

EQUATION 8-1: DEVICE OPERATING FREQUENCY

$$F_{CY} = \frac{F_{OSC}}{2}$$

© 2011-2012 Microchip Technology Inc.

8.1.3 PLL CONFIGURATION

The primary oscillator and internal FRC oscillator can optionally use an on-chip, 4x PLL to obtain higher speeds of operation.

For example, suppose an 8 MHz crystal is being used with the selected oscillator mode of MS with PLL. This provides a FOSC of 8 MHz * 4 = 32 MHz. The resultant device operating speed is 32/2 = 16 MIPS.

EQUATION 8-2: MS WITH PLL MODE EXAMPLE

$$F_{CY} = \frac{F_{OSC}}{2} = \frac{1}{2}(8000000\ 4) = 16\ \text{MIPS}$$

TABLE 8-1: CONFIGURATION BIT VALUES FOR CLOCK SELECTION

Oscillator Mode	Oscillator Source	POSCMD<1:0>	FNOSC<2:0>	See Note
Fast RC Oscillator with Divide-by-n (FRCDIVN)	Internal	xx	111	1, 2
Fast RC Oscillator with Divide-by-16 (FRCDIV16)	Internal	xx	110	1
Low-Power RC Oscillator (LPRC)	Internal	xx	101	1
Secondary (Timer1) Oscillator (SOSC)	Secondary	xx	100	1
Primary Oscillator (MS) with PLL (MSPLL)	Primary	01	011	—
Primary Oscillator (EC) with PLL (ECPLL)	Primary	00	011	1
Primary Oscillator (HS)	Primary	10	010	—
Primary Oscillator (MS)	Primary	01	010	—
Primary Oscillator (EC)	Primary	00	010	1
Fast RC Oscillator (FRC) with Divide-by-n and PLL (FRCPLL)	Internal	xx	001	1
Fast RC Oscillator (FRC)	Internal	xx	000	1

Note 1: OSC2 pin function is determined by the OSCIOFNC Configuration bit.

2: This is the default oscillator mode for an unprogrammed (erased) device.

8.2 Oscillator Control Registers

REGISTER 8-1: OSCCON: OSCILLATOR CONTROL REGISTER(1)

U-0	R-0	R-0	R-0	U-0	R/W-y	R/W-y	R/W-y
—	COSC<2:0>			—	NOSC<2:0>(2)		
bit 15							bit 8

R/W-0	R/W-0	R-0	U-0	R/C-0	U-0	R/W-0	R/W-0
CLKLOCK	IOLOCK	LOCK	—	CF	—	LPOSCEN	OSWEN
bit 7							bit 0

Legend:	C = Clearable bit	y = Value set from Configuration bits on POR	
R = Readable bit	W = Writable bit	U = Unimplemented bit, read as ‘0’	
-n = Value at POR	‘1’ = Bit is set	‘0’ = Bit is cleared	x = Bit is unknown

bit 15 **Unimplemented:** Read as ‘0’

bit 14-12 **COSC<2:0>:** Current Oscillator Selection bits (read-only)
111 = Fast RC Oscillator (FRC) with Divide-by-n
110 = Fast RC Oscillator (FRC) with Divide-by-16
101 = Low-Power RC Oscillator (LPRC)
100 = Secondary Oscillator (SOSC)
011 = Primary Oscillator (MS, EC) with PLL
010 = Primary Oscillator (MS, HS, EC)
001 = Fast RC Oscillator (FRC) with Divide-by-n and PLL (FRCPLL)
000 = Fast RC Oscillator (FRC)

bit 11 **Unimplemented:** Read as ‘0’

bit 10-8 **NOSC<2:0>:** New Oscillator Selection bits(2)
111 = Fast RC Oscillator (FRC) with Divide-by-n
110 = Fast RC Oscillator (FRC) with Divide-by-16
101 = Low-Power RC Oscillator (LPRC)
100 = Secondary Oscillator (SOSC)
011 = Primary Oscillator (MS, EC) with PLL
010 = Primary Oscillator (MS, HS, EC)
001 = Fast RC Oscillator (FRC) with Divide-by-n and PLL (FRCPLL)
000 = Fast RC Oscillator (FRC)

bit 7 **CLKLOCK:** Clock Lock Enable bit
If Clock Switching is Enabled and FSCM is Disabled (FCKSM<1:0> (FOSC<7:6>) = 0b01):
1 = Clock switching is disabled, system clock source is locked
0 = Clock switching is enabled, system clock source can be modified by clock switching

bit 6 **IOLOCK:** Peripheral Pin Select Lock bit
1 = Peripherial Pin Select is locked, write to Peripheral Pin Select registers is not allowed
0 = Peripherial Pin Select is not locked, write to Peripheral Pin Select registers is allowed

bit 5 **LOCK:** PLL Lock Status bit (read-only)
1 = Indicates that PLL is in lock or PLL start-up timer is satisfied
0 = Indicates that PLL is out of lock, start-up timer is in progress or PLL is disabled

bit 4 **Unimplemented:** Read as ‘0’

Note 1: Writes to this register require an unlock sequence. Refer to **Section 52. “Oscillator (Part VI)”** (DS70644) in the *“dsPIC33F/PIC24H Family Reference Manual”* for details.

2: Direct clock switches between any primary oscillator mode with PLL and FRCPLL mode are not permitted. This applies to clock switches in either direction. In these instances, the application must switch to FRC mode as a transition clock source between the two PLL modes.

© 2011-2012 Microchip Technology Inc.

REGISTER 8-1: OSCCON: OSCILLATOR CONTROL REGISTER(1) (CONTINUED)

bit 3 **CF:** Clock Fail Detect bit (read/clear by application)
1 = FSCM has detected clock failure
0 = FSCM has not detected clock failure

bit 2 **Unimplemented:** Read as '0'

bit 1 **LPOSCEN:** Secondary (LP) Oscillator Enable bit
1 = Enables secondary oscillator
0 = Disables secondary oscillator

bit 0 **OSWEN:** Oscillator Switch Enable bit
1 = Requests oscillator switch to selection specified by NOSC<2:0> bits
0 = Oscillator switch is complete

Note 1: Writes to this register require an unlock sequence. Refer to **Section 52. "Oscillator (Part VI)"** (DS70644) in the *"dsPIC33F/PIC24H Family Reference Manual"* for details.

2: Direct clock switches between any primary oscillator mode with PLL and FRCPLL mode are not permitted. This applies to clock switches in either direction. In these instances, the application must switch to FRC mode as a transition clock source between the two PLL modes.

REGISTER 8-2: CLKDIV: CLOCK DIVISOR REGISTER

R/W-0	R/W-0	R/W-1	R/W-1	R/W-0	R/W-0	R/W-0	R/W-0
ROI	DOZE<2:0>(2,3)			DOZEN(1,2,3)	FRCDIV<2:0>		
bit 15							bit 8

U-0	U-0	U-0	U-0	U-0	U-0	U-0	U-0
—	—	—	—	—	—	—	—
bit 7							bit 0

Legend:			
R = Readable bit	W = Writable bit	U = Unimplemented bit, read as ‘0’	
-n = Value at POR	‘1’ = Bit is set	‘0’ = Bit is cleared	x = Bit is unknown

bit 15 **ROI:** Recover on Interrupt bit
1 = Interrupts will clear the DOZEN bit and the processor clock/peripheral clock ratio is set to 1:1
0 = Interrupts have no effect on the DOZEN bit

bit 14-12 **DOZE<2:0>:** Processor Clock Reduction Select bits(2,3)
111 = FCY/128
110 = FCY/64
101 = FCY/32
100 = FCY/16
011 = FCY/8 (default)
010 = FCY/4
001 = FCY/2
000 = FCY/1

bit 11 **DOZEN:** DOZE Mode Enable bit(1,2,3)
1 = DOZE<2:0> bits field specifies the ratio between the peripheral clocks and the processor clocks
0 = Processor clock/peripheral clock ratio is forced to 1:1

bit 10-8 **FRCDIV<2:0>:** Internal Fast RC Oscillator Postscaler bits
111 = FRC divide-by-256
110 = FRC divide-by-64
101 = FRC divide-by-32
100 = FRC divide-by-16
011 = FRC divide-by-8
010 = FRC divide-by-4
001 = FRC divide-by-2
000 = FRC divide-by-1 (default)

bit 7-0 **Unimplemented:** Read as ‘0’

Note 1: This bit is cleared when the ROI bit is set and an interrupt occurs.
2: If DOZEN = 1, writes to DOZE<2:0> are ignored.
3: If DOZE<2:0> = 000, the DOZEN bit cannot be set by the user; writes are ignored.

© 2011-2012 Microchip Technology Inc.

REGISTER 8-3: OSCTUN: FRC OSCILLATOR TUNING REGISTER

U-0	U-0	U-0	U-0	U-0	U-0	U-0	U-0
—	—	—	—	—	—	—	—
bit 15							bit 8

U-0	U-0	R/W-0	R/W-0	R/W-0	R/W-0	R/W-0	R/W-0
—	—	TUN<5:0>(1)					
bit 7							bit 0

Legend:			
R = Readable bit	W = Writable bit	U = Unimplemented bit, read as ‘0’	
-n = Value at POR	‘1’ = Bit is set	‘0’ = Bit is cleared	x = Bit is unknown

bit 15-6 **Unimplemented:** Read as ‘0’

bit 5-0 **TUN<5:0>:** FRC Oscillator Tuning bits(1)

011111 = Center frequency +11.625% (8.23 MHz)
011110 = Center frequency +11.25% (8.20 MHz)
•
•
•
000001 = Center frequency +0.375% (7.40 MHz)
000000 = Center frequency (7.37 MHz nominal)
111111 = Center frequency -0.375% (7.345 MHz)
•
•
•
100001 = Center frequency -11.625% (6.52 MHz)
100000 = Center frequency -12% (6.49 MHz)

Note 1: OSCTUN functionality has been provided to help customers compensate for temperature effects on the FRC frequency over a wide range of temperatures. The tuning step size is an approximation and is neither characterized nor tested.

8.3 Clock Switching Operation

Applications are free to switch among any of the four clock sources (Primary, LP, FRC and LPRC) under software control at any time. To limit the possible side effects of this flexibility, dsPIC33FJ16(GP/MC)101/102 and dsPIC33FJ32(GP/MC)101/102/104 devices have a safeguard lock built into the switch process.

Note: Primary Oscillator mode has three different submodes (MS, HS, and EC), which are determined by the POSCMD<1:0> Configuration bits. While an application can switch to and from Primary Oscillator mode in software, it cannot switch among the different primary submodes without reprogramming the device.

8.3.1 ENABLING CLOCK SWITCHING

To enable clock switching, the FCKSM1 Configuration bit in the FOSC Configuration register must be programmed to '0'. (Refer to **Section 23.1 "Configuration Bits"** for further details.) If the FCKSM1 Configuration bit is unprogrammed ('1'), the clock switching function and Fail-Safe Clock Monitor function are disabled. This is the default setting.

The NOSCx control bits (OSCCON<10:8>) do not control the clock selection when clock switching is disabled. However, the COSCx bits (OSCCON<14:12>) reflect the clock source selected by the FNOSCx Configuration bits.

The OSWEN control bit (OSCCON<0>) has no effect when clock switching is disabled; it is held at '0' at all times.

8.3.2 OSCILLATOR SWITCHING SEQUENCE

Performing a clock switch requires this basic sequence:

1. If desired, read the COSC bits (OSCCON<14:12>) to determine the current oscillator source.
2. Perform the unlock sequence to allow a write to the OSCCON register high byte.
3. Write the appropriate value to the NOSCx control bits (OSCCON<10:8>) for the new oscillator source.
4. Perform the unlock sequence to allow a write to the OSCCON register low byte.
5. Set the OSWEN bit (OSCCON<0>) to initiate the oscillator switch.

Once the basic sequence is completed, the system clock hardware responds automatically as follows:

1. The clock switching hardware compares the COSCx status bits with the new value of the NOSCx control bits. If they are the same, the clock switch is a redundant operation. In this case, the OSWEN bit is cleared automatically and the clock switch is aborted.
2. If a valid clock switch has been initiated, the LOCK and CF (OSCCON<5,3>) status bits are cleared.
3. The new oscillator is turned on by the hardware if it is not currently running. If a crystal oscillator must be turned on, the hardware waits until the Oscillator Start-up Timer (OST) expires. If the new source is using the PLL, the hardware waits until a PLL lock is detected (LOCK = 1).
4. The hardware waits for 10 clock cycles from the new clock source and then performs the clock switch.
5. The hardware clears the OSWEN bit to indicate a successful clock transition. In addition, the NOSCx bit values are transferred to the COSCx status bits.
6. The old clock source is turned off at this time, with the exception of LPRC (if WDT or FSCM is enabled) or LP (if LPOSCEN remains set).

Note 1: The processor continues to execute code throughout the clock switching sequence. Timing-sensitive code should not be executed during this time.

2: Direct clock switches between any Primary Oscillator mode with PLL and FRCPLL mode are not permitted. This applies to clock switches in either direction. In these instances, the application must switch to FRC mode as a transition clock source between the two PLL modes.

3: Refer to **Section 52. "Oscillator (Part VI)"** (DS70644) in the *"dsPIC33F/PIC24H Family Reference Manual"* for details.

8.4 Fail-Safe Clock Monitor (FSCM)

The Fail-Safe Clock Monitor (FSCM) allows the device to continue to operate even in the event of an oscillator failure. The FSCM function is enabled by programming. If the FSCM function is enabled, the LPRC internal oscillator runs at all times (except during Sleep mode) and is not subject to control by the Watchdog Timer.

In the event of an oscillator failure, the FSCM generates a clock failure trap event and switches the system clock over to the FRC oscillator. Then, the application program can either attempt to restart the oscillator or execute a controlled shutdown. The trap can be treated as a Warm Reset by simply loading the Reset address into the oscillator fail trap vector.

If the PLL multiplier is used to scale the system clock, the internal FRC is also multiplied by the same factor on clock failure. Essentially, the device switches to FRC with PLL on a clock failure.

© 2011-2012 Microchip Technology Inc.

9.0 POWER-SAVING FEATURES

Note 1: This data sheet summarizes the features of the dsPIC33FJ16(GP/MC)101/102 and dsPIC33FJ32(GP/MC)101/102/104 family devices. It is not intended to be a comprehensive reference source. To complement the information in this data sheet, refer to **Section 9. "Watchdog Timer and Power-Saving Modes"** (DS70196) in the *"dsPIC33F/PIC24H Family Reference Manual"*, which is available from the Microchip web site (www.microchip.com).

2: Some registers and associated bits described in this section may not be available on all devices. Refer to **Section 4.0 "Memory Organization"** in this data sheet for device-specific register and bit information.

The dsPIC33FJ16(GP/MC)101/102 and dsPIC33FJ32(GP/MC)101/102/104 devices provide the ability to manage power consumption by selectively managing clocking to the CPU and the peripherals. In general, a lower clock frequency and a reduction in the number of circuits being clocked constitutes lower consumed power. Devices can manage power consumption in four different ways:

- Clock Frequency
- Instruction-Based Sleep and Idle modes
- Software-Controlled Doze mode
- Selective Peripheral Control in Software

Combinations of these methods can be used to selectively tailor an application's power consumption while still maintaining critical application features, such as timing-sensitive communications.

9.1 Clock Frequency and Clock Switching

dsPIC33FJ16(GP/MC)101/102 and dsPIC33FJ32(GP/MC)101/102/104 devices allow a wide range of clock frequencies to be selected under application control. If the system clock configuration is not locked, users can choose low-power or high-precision oscillators by simply changing the NOSCx bits (OSCCON<10:8>). The process of changing a system clock during operation, as well as limitations to the process, are discussed in more detail in **Section 8.0 "Oscillator Configuration"**.

9.2 Instruction-Based Power-Saving Modes

dsPIC33FJ16(GP/MC)101/102 and dsPIC33FJ32(GP/MC)101/102/104 devices have two special power-saving modes that are entered through the execution of a special `PWRSAV` instruction. Sleep mode stops clock operation and halts all code execution. Idle mode halts the CPU and code execution, but allows peripheral modules to continue operation. The assembler syntax of the `PWRSAV` instruction is shown in Example 9-1.

Note: `SLEEP_MODE` and `IDLE_MODE` are constants defined in the assembler include file for the selected device.

Sleep and Idle modes can be exited as a result of an enabled interrupt, WDT time-out or a device Reset. When the device exits these modes, it is said to wake-up.

9.2.1 SLEEP MODE

The following occur in Sleep mode:

- The system clock source is shut down. If an on-chip oscillator is used, it is turned off.
- The device current consumption is reduced to a minimum, provided that no I/O pin is sourcing current
- The Fail-Safe Clock Monitor does not operate, since the system clock source is disabled
- The LPRC clock continues to run in Sleep mode if the WDT is enabled
- The WDT, if enabled, is automatically cleared prior to entering Sleep mode
- Some device features or peripherals may continue to operate. This includes items such as the Input Change Notification (ICN) on the I/O ports, or peripherals that use an external clock input.
- Any peripheral that requires the system clock source for its operation is disabled

The device will wake-up from Sleep mode on any of the these events:

- Any interrupt source that is individually enabled
- Any form of device Reset
- A WDT time-out

On wake-up from Sleep mode, the processor restarts with the same clock source that was active when Sleep mode was entered.

EXAMPLE 9-1: `PWRSAV` INSTRUCTION SYNTAX

```
PWRSAV  #SLEEP_MODE    ; Put the device into SLEEP mode
PWRSAV  #IDLE_MODE     ; Put the device into IDLE mode
```

9.2.2 IDLE MODE

The following occur in Idle mode:

- The CPU stops executing instructions.
- The WDT is automatically cleared.
- The system clock source remains active. By default, all peripheral modules continue to operate normally from the system clock source, but can also be selectively disabled (see **Section 9.4 "Peripheral Module Disable"**).
- If the WDT or FSCM is enabled, the LPRC also remains active.

The device will wake from Idle mode on any of these events:

- Any interrupt that is individually enabled
- Any device Reset
- A WDT time-out

On wake-up from Idle mode, the clock is reapplied to the CPU and instruction execution will begin (2-4 clock cycles later), starting with the instruction following the `PWRSAV` instruction, or the first instruction in the ISR.

9.2.3 INTERRUPTS COINCIDENT WITH POWER SAVE INSTRUCTIONS

Any interrupt that coincides with the execution of a `PWRSAV` instruction is held off until entry into Sleep or Idle mode has completed. The device then wakes up from Sleep or Idle mode.

9.3 Doze Mode

The preferred strategies for reducing power consumption are changing clock speed and invoking one of the power-saving modes. In some circumstances, this may not be practical. For example, it may be necessary for an application to maintain uninterrupted synchronous communication, even while it is doing nothing else. Reducing system clock speed can introduce communication errors, while using a power-saving mode can stop communications completely.

Doze mode is a simple and effective alternative method to reduce power consumption while the device is still executing code. In this mode, the system clock continues to operate from the same source and at the same speed. Peripheral modules continue to be clocked at the same speed, while the CPU clock speed is reduced. Synchronization between the two clock domains is maintained, allowing the peripherals to access the SFRs while the CPU executes code at a slower rate.

Doze mode is enabled by setting the DOZEN bit (CLKDIV<11>). The ratio between peripheral and core clock speed is determined by the DOZE<2:0> bits (CLKDIV<14:12>). There are eight possible configurations, from 1:1 to 1:128, with 1:1 being the default setting.

Programs can use Doze mode to selectively reduce power consumption in event-driven applications. This allows clock-sensitive functions, such as synchronous communications, to continue without interruption while the CPU Idles, waiting for something to invoke an interrupt routine. An automatic return to full-speed CPU operation on interrupts can be enabled by setting the ROI bit (CLKDIV<15>). By default, interrupt events have no effect on Doze mode operation.

For example, suppose the device is operating at 20 MIPS and the UART module has been configured for 500 kbps based on this device operating speed. If the device is placed in Doze mode with a clock frequency ratio of 1:4, the UART module continues to communicate at the required bit rate of 500 kbps, but the CPU now starts executing instructions at a frequency of 5 MIPS.

9.4 Peripheral Module Disable

The Peripheral Module Disable (PMD) registers provide a method to disable a peripheral module by stopping all clock sources supplied to that module. When a peripheral is disabled using the appropriate PMD control bit, the peripheral is in a minimum power consumption state. The control and status registers associated with the peripheral are also disabled, so writes to those registers will have no effect and read values will be invalid.

A peripheral module is enabled only if both the associated bit in the PMD register is cleared and the peripheral is supported by the specific dsPIC® DSC variant. If the peripheral is present in the device, it is enabled in the PMD register by default.

Note:	If a PMD bit is set, the corresponding module is disabled after a delay of one instruction cycle. Similarly, if a PMD bit is cleared, the corresponding module is enabled after a delay of one instruction cycle (assuming the module control registers are already configured to enable module operation).

© 2011-2012 Microchip Technology Inc.

9.5 PMD Control Registers

REGISTER 9-1: PMD1: PERIPHERAL MODULE DISABLE CONTROL REGISTER 1

R/W-0	R/W-0	R/W-0	R/W-0	R/W-0	U-0	R/W-0	U-0
T5MD(1)	T4MD(1)	T3MD	T2MD	T1MD	—	PWM1MD	—
bit 15							bit 8

R/W-0	U-0	R/W-0	U-0	R/W-0	U-0	U-0	R/W-0
I2C1MD	—	U1MD	—	SPI1MD	—	—	AD1MD(2)
bit 7							bit 0

Legend:			
R = Readable bit	W = Writable bit	U = Unimplemented bit, read as ‘0’	
-n = Value at POR	‘1’ = Bit is set	‘0’ = Bit is cleared	x = Bit is unknown

bit 15 **T5MD:** Timer5 Module Disable bit(1)
1 = Timer5 module is disabled
0 = Timer5 module is enabled

bit 14 **T4MD:** Timer4 Module Disable bit(1)
1 = Timer4 module is disabled
0 = Timer4 module is enabled

bit 13 **T3MD:** Timer3 Module Disable bit
1 = Timer3 module is disabled
0 = Timer3 module is enabled

bit 12 **T2MD:** Timer2 Module Disable bit
1 = Timer2 module is disabled
0 = Timer2 module is enabled

bit 11 **T1MD:** Timer1 Module Disable bit
1 = Timer1 module is disabled
0 = Timer1 module is enabled

bit 10 **Unimplemented:** Read as ‘0’

bit 9 **PWM1MD:** PWM1 Module Disable bit
1 = PWM1 module is disabled
0 = PWM1 module is enabled

bit 18 **Unimplemented:** Read as ‘0’

bit 7 **I2C1MD:** I2C1 Module Disable bit
1 = I2C1 module is disabled
0 = I2C1 module is enabled

bit 6 **Unimplemented:** Read as ‘0’

bit 5 **U1MD:** UART1 Module Disable bit
1 = UART1 module is disabled
0 = UART1 module is enabled

bit 4 **Unimplemented:** Read as ‘0’

Note 1: This bit is available in dsPIC33FJ32(GP/MC)10X devices only.

2: PCFGx bits have no effect if the ADC module is disabled by setting this bit. When the bit is set, all port pins that have been multiplexed with ANx will be in Digital mode.

REGISTER 9-1: PMD1: PERIPHERAL MODULE DISABLE CONTROL REGISTER 1 (CONTINUED)

bit 3 **SPI1MD:** SPI1 Module Disable bit
1 = SPI1 module is disabled
0 = SPI1 module is enabled

bit 2-1 **Unimplemented:** Read as '0'

bit 0 **AD1MD:** ADC1 Module Disable bit(2)
1 = ADC1 module is disabled
0 = ADC1 module is enabled

Note 1: This bit is available in dsPIC33FJ32(GP/MC)10X devices only.
2: PCFGx bits have no effect if the ADC module is disabled by setting this bit. When the bit is set, all port pins that have been multiplexed with ANx will be in Digital mode.

REGISTER 9-2: PMD2: PERIPHERAL MODULE DISABLE CONTROL REGISTER 2

U-0	U-0	U-0	U-0	U-0	R/W-0	R/W-0	R/W-0
—	—	—	—	—	IC3MD	IC2MD	IC1MD
bit 15							bit 8

U-0	U-0	U-0	U-0	U-0	U-0	R/W-0	R/W-0
—	—	—	—	—	—	OC2MD	OC1MD
bit 7							bit 0

Legend:			
R = Readable bit	W = Writable bit	U = Unimplemented bit, read as '0'	
-n = Value at POR	'1' = Bit is set	'0' = Bit is cleared	x = Bit is unknown

bit 15-11 **Unimplemented:** Read as '0'

bit 10 **IC3MD:** Input Capture 3 Module Disable bit
1 = Input Capture 3 module is disabled
0 = Input Capture 3 module is enabled

bit 9 **IC2MD:** Input Capture 2 Module Disable bit
1 = Input Capture 2 module is disabled
0 = Input Capture 2 module is enabled

bit 8 **IC1MD:** Input Capture 1 Module Disable bit
1 = Input Capture 1 module is disabled
0 = Input Capture 1 module is enabled

bit 7-2 **Unimplemented:** Read as '0'

bit 1 **OC2MD:** Output Compare 2 Module Disable bit
1 = Output Compare 2 module is disabled
0 = Output Compare 2 module is enabled

bit 0 **OC1MD:** Output Compare 1 Module Disable bit
1 = Output Compare 1 module is disabled
0 = Output Compare 1 module is enabled

© 2011-2012 Microchip Technology Inc.

REGISTER 9-3: PMD3: PERIPHERAL MODULE DISABLE CONTROL REGISTER 3

U-0	U-0	U-0	U-0	U-0	R/W-0	R/W-0	U-0
—	—	—	—	—	CMPMD	RTCCMD	—
bit 15							bit 8

U-0	U-0	U-0	U-0	U-0	U-0	U-0	U-0
—	—	—	—	—	—	—	—
bit 7							bit 0

Legend:			
R = Readable bit	W = Writable bit	U = Unimplemented bit, read as ‘0’	
-n = Value at POR	‘1’ = Bit is set	‘0’ = Bit is cleared	x = Bit is unknown

bit 15-11 **Unimplemented:** Read as ‘0’

bit 10 **CMPMD:** Comparator Module Disable bit
1 = Comparator module is disabled
0 = Comparator module is enabled

bit 9 **RTCCMD:** RTCC Module Disable bit
1 = RTCC module is disabled
0 = RTCC module is enabled

bit 8-0 **Unimplemented:** Read as ‘0’

REGISTER 9-4: PMD4: PERIPHERAL MODULE DISABLE CONTROL REGISTER 4

U-0	U-0	U-0	U-0	U-0	U-0	U-0	U-0
—	—	—	—	—	—	—	—
bit 15							bit 8

U-0	U-0	U-0	U-0	U-0	R/W-0	U-0	U-0
—	—	—	—	—	CTMUMD	—	—
bit 7							bit 0

Legend:			
R = Readable bit	W = Writable bit	U = Unimplemented bit, read as ‘0’	
-n = Value at POR	‘1’ = Bit is set	‘0’ = Bit is cleared	x = Bit is unknown

bit 15-3 **Unimplemented:** Read as ‘0’

bit 2 **CTMUMD:** CTMU Module Disable bit
1 = CTMU module is disabled
0 = CTMU module is enabled

bit 1-0 **Unimplemented:** Read as ‘0’

NOTES:

© 2011-2012 Microchip Technology Inc.

10.0 I/O PORTS

Note 1: This data sheet summarizes the features of the dsPIC33FJ16(GP/MC)101/102 and dsPIC33FJ32(GP/MC)101/102/104 family devices. It is not intended to be a comprehensive reference source. To complement the information in this data sheet, refer to **Section 10. "I/O Ports"** (DS70193) in the *"dsPIC33F/PIC24H Family Reference Manual"*, which is available from the Microchip web site (www.microchip.com).

2: Some registers and associated bits described in this section may not be available on all devices. Refer to **Section 4.0 "Memory Organization"** in this data sheet for device-specific register and bit information.

All of the device pins (except VDD, VSS, $\overline{\text{MCLR}}$, and OSC1/CLKI) are shared among the peripherals and the parallel I/O ports. All I/O input ports feature Schmitt Trigger inputs for improved noise immunity.

10.1 Parallel I/O (PIO) Ports

Generally a parallel I/O port that shares a pin with a peripheral is subservient to the peripheral. The peripheral's output buffer data and control signals are provided to a pair of multiplexers. The multiplexers select whether the peripheral or the associated port has ownership of the output data and control signals of the I/O pin. The logic also prevents "loop through," in which a port's digital output can drive the input of a peripheral that shares the same pin. Figure 10-1 shows how ports are shared with other peripherals and the associated I/O pin to which they are connected.

When a peripheral is enabled and the peripheral is actively driving an associated pin, the use of the pin as a general purpose output pin is disabled. The I/O pin can be read, but the output driver for the parallel port bit is disabled. If a peripheral is enabled, but the peripheral is not actively driving a pin, that pin can be driven by a port.

All port pins have three registers directly associated with their operation as digital I/O. The Data Direction register (TRISx) determines whether the pin is an input or an output. If the data direction bit is a '1', the pin is an input. All port pins are defined as inputs after a Reset. Reads from the Output Latch (LATx) register read the latch. Writes to the Output Latch register write the latch. Reads from the port (PORTx) read the port pins, while writes to the port pins write the latch.

Any bit and its associated data and control registers that is not valid for a particular device will be disabled. This means the corresponding LATx and TRISx registers and the port pin will read as zeros.

When a pin is shared with another peripheral or function that is defined as an input only, it is nevertheless regarded as a dedicated port because there is no other competing source of outputs.

FIGURE 10-1: BLOCK DIAGRAM OF A TYPICAL SHARED PORT STRUCTURE

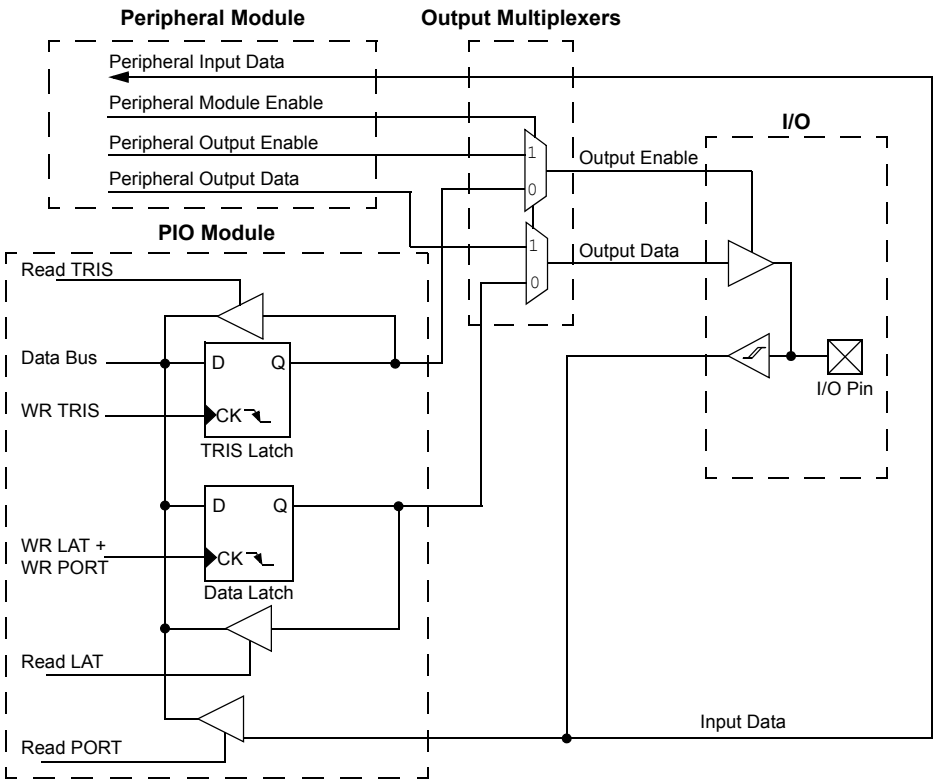

© 2011-2012 Microchip Technology Inc.

10.1.1 OPEN-DRAIN CONFIGURATION

In addition to the PORT, LAT and TRIS registers for data control, some port pins can also be individually configured for either digital or open-drain output. This is controlled by the Open-Drain Control register, ODCx, associated with each port. Setting any of the bits configures the corresponding pin to act as an open-drain output.

The open-drain feature allows the generation of outputs higher than V_{DD} (e.g., 5V) on any desired 5V tolerant pins by using external pull-up resistors. The maximum open-drain voltage allowed is the same as the maximum V_{IH} specification.

See **"Pin Diagrams"** for the available pins and their functionality.

10.2 Configuring Analog Port Pins

The AD1PCFGL and TRIS registers control the operation of the Analog-to-Digital port pins. The port pins that are to function as analog inputs must have their corresponding TRIS bit set (input). If the TRIS bit is cleared (output), the digital output level (V_{OH} or V_{OL}) will be converted.

The AD1PCFGL register has a default value of 0x0000; therefore, all pins that share ANx functions are analog (not digital) by default.

When the PORT register is read, all pins configured as analog input channels will read as cleared (a low level).

Pins configured as digital inputs will not convert an analog input. Analog levels on any pin defined as a digital input (including the ANx pins) can cause the input buffer to consume current that exceeds the device specifications.

10.2.1 I/O PORT WRITE/READ TIMING

One instruction cycle is required between a port direction change or port write operation and a read operation of the same port. Typically this instruction would be an NOP. An demonstration is shown in Example 10-1.

10.3 Input Change Notification (ICN)

The Input Change Notification function of the I/O ports allows the dsPIC33FJ16(GP/MC)101/102 and dsPIC33FJ32(GP/MC)101/102/104 devices to generate interrupt requests to the processor in response to a Change-of-State (COS) on selected input pins. This feature can detect input Change-of-States even in Sleep mode when the clocks are disabled. Depending on the device pin count, up to 21 external signals (CNx pin) can be selected (enabled) for generating an interrupt request on a Change-of-State.

Four control registers are associated with the CN module. The CNEN1 and CNEN2 registers contain the interrupt enable control bits for each of the CN input pins. Setting any of these bits enables a CN interrupt for the corresponding pins.

Each CN pin also has a weak pull-up connected to it. The pull-ups act as a current source connected to the pin, and eliminate the need for external resistors when push-button or keypad devices are connected. The pull-ups are enabled separately using the CNPU1 and CNPU2 registers, which contain the control bits for each of the CN pins. Setting any of the control bits enables the weak pull-ups for the corresponding pins.

Note:	Pull-ups on Input Change Notification pins should always be disabled when the port pin is configured as a digital output.

EXAMPLE 10-1: PORT WRITE/READ EXAMPLE

```
MOV   0xFF00, W0          ; Configure PORTB<15:8> as inputs
MOV   W0, TRISBB          ; and PORTB<7:0> as outputs
NOP                       ; Delay 1 cycle
btss  PORTB, #13          ; Next Instruction
```

10.4 Peripheral Pin Select (PPS)

Peripheral Pin Select configuration enables peripheral set selection and placement on a wide range of I/O pins. By increasing the pinout options available on a particular device, programmers can better tailor the microcontroller to their entire application, rather than trimming the application to fit the device.

The Peripheral Pin Select configuration feature operates over a fixed subset of digital I/O pins. Programmers can independently map the input and/or output of most digital peripherals to any one of these I/O pins. Peripheral Pin Select is performed in software, and generally does not require the device to be reprogrammed. Hardware safeguards are included that prevent accidental or spurious changes to the peripheral mapping, once it has been established.

10.4.1 AVAILABLE PINS

The Peripheral Pin Select feature is used with a range of up to 16 pins. The number of available pins depends on the particular device and its pin count. Pins that support the Peripheral Pin Select feature include the designation “RPn” in their full pin designation, where “RP” designates a remappable peripheral and “n” is the remappable pin number.

10.4.2 CONTROLLING PERIPHERAL PIN SELECT

Peripheral Pin Select features are controlled through two sets of Special Function Registers: one to map peripheral inputs and one to map outputs. Because they are separately controlled, a particular peripheral’s input and output (if the peripheral has both) can be placed on any selectable function pin without constraint.

The association of a peripheral to a peripheral selectable pin is handled in two different ways, depending on whether an input or output is being mapped.

10.4.2.1 Input Mapping

The inputs of the Peripheral Pin Select options are mapped on the basis of the peripheral. A control register associated with a peripheral dictates the pin it will be mapped to. The RPINRx registers are used to configure peripheral input mapping (see Register 10-1 through Register 10-10). Each register contains sets of 5-bit fields, with each set associated with one of the remappable peripherals. Programming a given peripheral’s bit field with an appropriate 5-bit value maps the RPn pin with that value to that peripheral. For any given device, the valid range of values for any bit field corresponds to the maximum number of Peripheral Pin Selections supported by the device.

Figure 10-2 Illustrates remappable pin selection for U1RX input.

Note: For input mapping only, the Peripheral Pin Select (PPS) functionality does not have priority over the TRISx settings. Therefore, when configuring the RPx pin for input, the corresponding bit in the TRISx register must also be configured for input (i.e., set to ‘1’).

FIGURE 10-2: REMAPPABLE MUX INPUT FOR U1RX

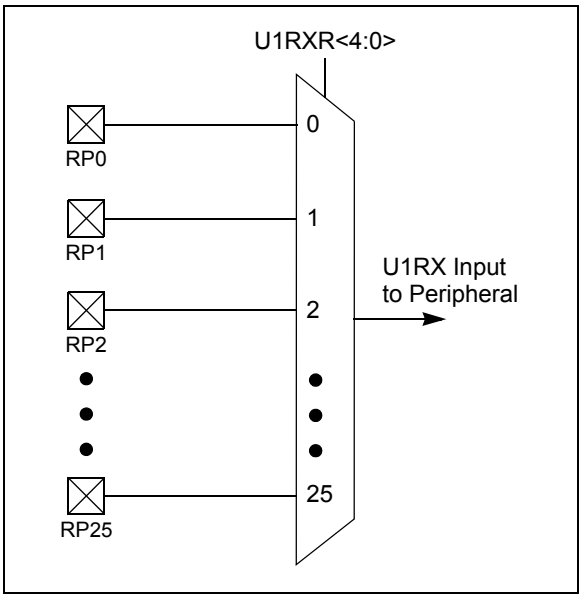

© 2011-2012 Microchip Technology Inc.

TABLE 10-1: SELECTABLE INPUT SOURCES (MAPS INPUT TO FUNCTION)(1)

Input Name	Function Name	Register	Configuration Bits
External Interrupt 1	INT1	RPINR0	INT1R<4:0>
External Interrupt 2	INT2	RPINR1	INT2R<4:0>
Timer2 External Clock	T2CK	RPINR3	T2CKR<4:0>
Timer3 External Clock	T3CK	RPINR3	T3CKR<4:0>
Timer4 External Clock	T4CK	RPINR4	T4CKR<4:0>(2)
Timer5 External Clock	T5CK	RPINR4	T5CKR<4:0>(2)
Input Capture 1	IC1	RPINR7	IC1R<4:0>
Input Capture 2	IC2	RPINR7	IC2R<4:0>
Input Capture 3	IC3	RPINR8	IC3R<4:0>
Output Compare Fault A	OCFA	RPINR11	OCFAR<4:0>
UART1 Receive	U1RX	RPINR18	U1RXR<4:0>
UART1 Clear-to-Send	$\overline{\text{U1CTS}}$	RPINR18	U1CTSR<4:0>
SDI1 SPI Data Input 1	SDI1	RPINR20	SDI1R<4:0>(2)
SCK1 SPI Clock Input 1	SCK1	RPINR20	SCK1R<4:0>(2)
SPI1 Slave Select Input	$\overline{\text{SS1}}$	RPINR21	SS1R<4:0>(2)

Note 1: Unless otherwise noted, all inputs use the Schmitt input buffers.
2: These bits are available in dsPIC33FJ32(GP/MC)10X devices only.

10.4.2.2 Output Mapping

In contrast to the inputs, the outputs of the Peripheral Pin Select options are mapped on the basis of the pin. In this case, a control register associated with a particular pin dictates the peripheral output to be mapped. The RPORx registers are used to control output mapping. Like the RPINRx registers, each register contains sets of 5-bit fields, with each set associated with one RPn pin (see Register 10-11 through Register 10-18). The value of the bit field corresponds to one of the peripherals, and that peripheral's output is mapped to the pin (see Table 10-2 and Figure 10-3).

The list of peripherals for output mapping also includes a null value of '00000' because of the mapping technique. This permits any given pin to remain unconnected from the output of any of the pin selectable peripherals.

FIGURE 10-3: MULTIPLEXING OF REMAPPABLE OUTPUT FOR RPn

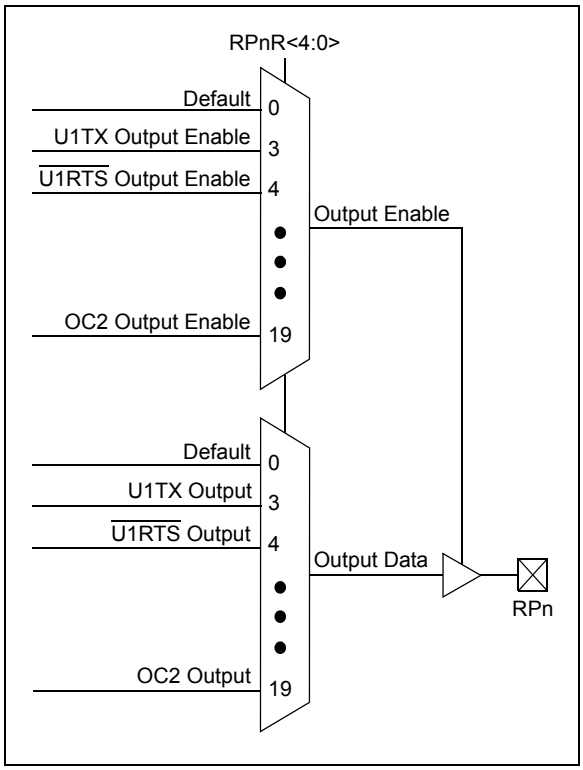

TABLE 10-2: OUTPUT SELECTION FOR REMAPPABLE PIN (RPn)

Function	RPnR<4:0>	Output Name
NULL	00000	RPn tied to Default Port Pin
C1OUT	00001	RPn tied to Comparator 1 Output
C2OUT	00010	RPn tied to Comparator 2 Output
U1TX	00011	RPn tied to UART1 Transmit
$\overline{\text{U1RTS}}$	00100	RPn tied to UART1 Ready-to-Send
SCK1	01000	RPn tied to SPI Clock(1)
SDO1	00111	RPn tied to SPI Data Output(1)
$\overline{\text{SS1}}$	01001	RPn tied to SPI1 Slave Select Output(1)
OC1	10010	RPn tied to Output Compare 1
OC2	10011	RPn tied to Output Compare 2
CTPLS	11101	RPn tied to CTMU Pulse Output
C3OUT	11110	RPn tied to Comparator 3 Output

Note 1: This function is available in dsPIC33FJ32(GP/MC)10X devices only.

10.4.3 CONTROLLING CONFIGURATION CHANGES

Because peripheral remapping can be changed during run time, some restrictions on peripheral remapping are needed to prevent accidental configuration changes. dsPIC33FJ16(GP/MC)101/102 and dsPIC33FJ32(GP/MC)101/102/104 devices include three features to prevent alterations to the peripheral map:

- Control register lock sequence
- Continuous state monitoring
- Configuration bit pin select lock

10.4.3.1 Control Register Lock

Under normal operation, writes to the RPINRx and RPORx registers are not allowed. Attempted writes appear to execute normally, but the contents of the registers remain unchanged. To change these registers, they must be unlocked in hardware. The register lock is controlled by the IOLOCK bit (OSCCON<6>). Setting IOLOCK prevents writes to the control registers; clearing IOLOCK allows writes.

To set or clear IOLOCK, a specific command sequence must be executed:

1. Write 0x46 to OSCCON<7:0>.
2. Write 0x57 to OSCCON<7:0>.
3. Clear (or set) IOLOCK as a single operation.

> **Note:** MPLAB® C30 provides built-in C language functions for unlocking the OSCCON register:
>
> ```
> __builtin_write_OSCCONL(value)
> __builtin_write_OSCCONH(value)
> ```
>
> See MPLAB IDE Help for more information.

Unlike the similar sequence with the oscillator's LOCK bit, IOLOCK remains in one state until changed. This allows all of the Peripheral Pin Selects to be configured with a single unlock sequence followed by an update to all control registers, then locked with a second lock sequence.

10.4.3.2 Continuous State Monitoring

In addition to being protected from direct writes, the contents of the RPINRx and RPORx registers are constantly monitored in hardware by shadow registers. If an unexpected change in any of the registers occurs (such as cell disturbances caused by ESD or other external events), a Configuration Mismatch Reset will be triggered.

10.4.3.3 Configuration Bit Pin Select Lock

As an additional level of safety, the device can be configured to prevent more than one write session to the RPINRx and RPORx registers. The IOL1WAY (FOSC<5>) Configuration bit blocks the IOLOCK bit from being cleared after it has been set once. If IOLOCK remains set, the register unlock procedure will not execute, and the Peripheral Pin Select Control registers cannot be written to. The only way to clear the bit and re-enable peripheral remapping is to perform a device Reset.

In the default (unprogrammed) state, IOL1WAY is set, restricting users to one write session. Programming IOL1WAY allows user applications unlimited access (with the proper use of the unlock sequence) to the Peripheral Pin Select registers.

© 2011-2012 Microchip Technology Inc.

10.5 I/O Helpful Tips

1. In some cases, certain pins, as defined in **Section 26.0 "Electrical Characteristics"**, Table 26-11 under "Injection Current", have internal protection diodes to VDD and VSS. The term, "Injection Current", is also referred to as "Clamp Current". On designated pins, with sufficient external current limiting precautions by the user, I/O pin input voltages are allowed to be greater or less than the data sheet absolute maximum ratings with nominal VDD, with respect to the VSS and VDD supplies. Note that when the user application forward biases either of the high or low side internal input clamp diodes, that the resulting current being injected into the device, that is clamped internally by the VDD and VSS power rails, may affect the ADC accuracy by four to six counts.
2. I/O pins that are shared with any analog input pin, (i.e., ANx), are always analog pins by default after any Reset. Consequently, any pin(s) configured as an analog input pin, automatically disables the digital input pin buffer. As such, any attempt to read a digital input pin will always return a '0' regardless of the digital logic level on the pin if the analog pin is configured. To use a pin as a digital I/O pin on a shared ANx pin, the user application needs to configure the Analog Pin Configuration register in the ADC module (AD1PCFGL), by setting the appropriate bit that corresponds to that I/O port pin, to a '1'. On devices with more than one ADC, both analog pin configurations for both ADC modules must be configured as a digital I/O pin for that pin to function as a digital I/O pin.

Note:	Although it is not possible to use a digital input pin when its analog function is enabled, it is possible to use the digital I/O output function, TRISx = 0x0, while the analog function is also enabled. However, this is not recommended, particularly if the analog input is connected to an external analog voltage source, which would create signal contention between the analog signal and the output pin driver.

3. Most I/O pins have multiple functions. Referring to the device pin diagrams in the data sheet, the priorities of the functions allocated to any pins are indicated by reading the pin name from left-to-right. The left most function name takes precedence over any function to its right in the naming convention. For example: AN16/T2CK/T7CK/RC1. This indicates that AN16 is the highest priority in this example and will supersede all other functions to its right in the list. Those other functions to its right, even if enabled, would not work as long as any other function to its left was enabled. This rule applies to all of the functions listed for a given pin.
4. Each CN pin has a configurable internal weak pull-up resistor. The pull-ups act as a current source connected to the pin, and eliminates the need for external resistors in certain applications. The internal pull-up is to ~(VDD-0.8), not VDD. This is still above the minimum VIH of CMOS and TTL devices.
5. When driving LEDs directly, the I/O pin can source or sink more current than what is specified in the VOH/IOH and VOL/IOL DC characteristic specification. The respective IOH and IOL current rating only applies to maintaining the corresponding output at or above the VOH and at or below the VOL levels. However, for LEDs unlike digital inputs of an externally connected device, they are not governed by the same minimum VIH/VIL levels. An I/O pin output can safely sink or source any current less than that listed in the absolute maximum rating section of the data sheet. For example:

   VOH = 2.4v @ IOH = -6 mA and VDD = 3.3V

   The maximum output current sourced by any 6 mA I/O pin = 15 mA.

   LED source current < 15 mA is technically permitted. Refer to the VOH/IOH specifications in **Section 26.0 "Electrical Characteristics"** for additional information.

10.6 I/O Resources

Many useful resources are provided on the main product page of the Microchip web site for the devices listed in this data sheet. This product page, which can be accessed using this link, contains the latest updates and additional information.

Note:	In the event you are not able to access the product page using the link above, enter this URL in your browser: http://www.microchip.com/wwwproducts/Devices.aspx?dDocName=en554109

10.6.1 KEY RESOURCES

- *"dsPIC33F/PIC24H Family Reference Manual"*, **Section 10. "I/O Ports"** (DS70193)
- Code Samples
- Application Notes
- Software Libraries
- Webinars
- All related *"dsPIC33F/PIC24H Family Reference Manual"* Sections
- Development Tools

10.7 Peripheral Pin Select Registers

The dsPIC33FJ16(GP/MC)101/102 and dsPIC33FJ32(GP/MC)101/102/104 family of devices implements up to 23 registers for remappable peripheral configuration.

> **Note:** Input and Output Register values can only be changed if IOLOCK (OSCCON<6>) = 0. See **Section 10.4.3.1 "Control Register Lock"** for a specific command sequence.

REGISTER 10-1: RPINR0: PERIPHERAL PIN SELECT INPUT REGISTER 0

U-0	U-0	U-0	R/W-1	R/W-1	R/W-1	R/W-1	R/W-1
—	—	—	INT1R<4:0>				
bit 15							bit 8

U-0	U-0	U-0	U-0	U-0	U-0	U-0	U-0
—	—	—	—	—	—	—	—
bit 7							bit 0

Legend:			
R = Readable bit	W = Writable bit	U = Unimplemented bit, read as '0'	
-n = Value at POR	'1' = Bit is set	'0' = Bit is cleared	x = Bit is unknown

bit 15-13 **Unimplemented:** Read as '0'

bit 12-8 **INT1R<4:0>:** Assign External Interrupt 1 (INTR1) to the Corresponding RPn Pin bits

11111 = Input tied to Vss
11110 = Reserved
.
.
.
11010 = Reserved
11001 = Input tied to RP25
.
.
.
00001 = Input tied to RP1
00000 = Input tied to RP0

bit 7-0 **Unimplemented:** Read as '0'

© 2011-2012 Microchip Technology Inc.

REGISTER 10-2: RPINR1: PERIPHERAL PIN SELECT INPUT REGISTER 1

U-0	U-0	U-0	U-0	U-0	U-0	U-0	U-0
—	—	—	—	—	—	—	—
bit 15							bit 8

U-0	U-0	U-0	R/W-1	R/W-1	R/W-1	R/W-1	R/W-1
—	—	—	INT2R<4:0>				
bit 7							bit 0

Legend:			
R = Readable bit	W = Writable bit	U = Unimplemented bit, read as ‘0’	
-n = Value at POR	‘1’ = Bit is set	‘0’ = Bit is cleared	x = Bit is unknown

bit 15-5 **Unimplemented:** Read as ‘0’

bit 4-0 **INT2R<4:0>:** Assign External Interrupt 2 (INTR2) to the Corresponding RPn Pin bits

11111 = Input tied to VSS
11110 = Reserved
.
.
.
11010 = Reserved
11001 = Input tied to RP25
.
.
.
00001 = Input tied to RP1
00000 = Input tied to RP0

REGISTER 10-3: RPINR3: PERIPHERAL PIN SELECT INPUT REGISTER 3

U-0	U-0	U-0	R/W-1	R/W-1	R/W-1	R/W-1	R/W-1
—	—	—	T3CKR<4:0>				
bit 15							bit 8

U-0	U-0	U-0	R/W-1	R/W-1	R/W-1	R/W-1	R/W-1
—	—	—	T2CKR<4:0>				
bit 7							bit 0

Legend:			
R = Readable bit	W = Writable bit	U = Unimplemented bit, read as ‘0’	
-n = Value at POR	‘1’ = Bit is set	‘0’ = Bit is cleared	x = Bit is unknown

bit 15-13 **Unimplemented:** Read as ‘0’

bit 12-8 **T3CKR<4:0>:** Assign Timer3 External Clock (T3CK) to the Corresponding RPn Pin bits

11111 = Input tied to Vss
11110 = Reserved
.
.
.
11010 = Reserved
11001 = Input tied to RP25
.
.
.
00001 = Input tied to RP1
00000 = Input tied to RP0

bit 7-5 **Unimplemented:** Read as ‘0’

bit 4-0 **T2CKR<4:0>:** Assign Timer2 External Clock (T2CK) to the Corresponding RPn Pin bits

11111 = Input tied to Vss
11110 = Reserved
.
.
.
11010 = Reserved
11001 = Input tied to RP25
.
.
.
00001 = Input tied to RP1
00000 = Input tied to RP0

© 2011-2012 Microchip Technology Inc.

REGISTER 10-4: RPINR4: PERIPHERAL PIN SELECT INPUT REGISTER 4

U-0	U-0	U-0	R/W-1	R/W-1	R/W-1	R/W-1	R/W-1
—	—	—	T5CKR<4:0>(1)				
bit 15							bit 8

U-0	U-0	U-0	R/W-1	R/W-1	R/W-1	R/W-1	R/W-1
—	—	—	T4CKR<4:0>(1)				
bit 7							bit 0

Legend:			
R = Readable bit	W = Writable bit	U = Unimplemented bit, read as ‘0’	
-n = Value at POR	‘1’ = Bit is set	‘0’ = Bit is cleared	x = Bit is unknown

bit 15-13 **Unimplemented:** Read as ‘0’

bit 12-8 **T5CKR<4:0>:** Assign Timer5 External Clock (T5CK) to the Corresponding RPn Pin bits(1)

11111 = Input tied to Vss
11110 = Reserved
.
.
.
11010 = Reserved
11001 = Input tied to RP25
.
.
.
00001 = Input tied to RP1
00000 = Input tied to RP0

bit 7-5 **Unimplemented:** Read as ‘0’

bit 4-0 **T4CKR<4:0>:** Assign Timer4 External Clock (T4CK) to the Corresponding RPn Pin bits(1)

11111 = Input tied to Vss
11110 = Reserved
.
.
.
11010 = Reserved
11001 = Input tied to RP25
.
.
.
00001 = Input tied to RP1
00000 = Input tied to RP0

Note 1: These bits are available in dsPIC33FJ32(GP/MC)10X devices only.

REGISTER 10-5: RPINR7: PERIPHERAL PIN SELECT INPUT REGISTER 7

U-0	U-0	U-0	R/W-1	R/W-1	R/W-1	R/W-1	R/W-1
—	—	—	IC2R<4:0>				
bit 15							bit 8

U-0	U-0	U-0	R/W-1	R/W-1	R/W-1	R/W-1	R/W-1
—	—	—	IC1R<4:0>				
bit 7							bit 0

Legend:			
R = Readable bit	W = Writable bit	U = Unimplemented bit, read as ‘0’	
-n = Value at POR	‘1’ = Bit is set	‘0’ = Bit is cleared	x = Bit is unknown

bit 15-13 **Unimplemented:** Read as ‘0’

bit 12-8 **IC2R<4:0>:** Assign Input Capture 2 (IC2) to the Corresponding RPn Pin bits

11111 = Input tied to Vss
11110 = Reserved
.
.
.
11010 = Reserved
11001 = Input tied to RP25
.
.
.
00001 = Input tied to RP1
00000 = Input tied to RP0

bit 7-5 **Unimplemented:** Read as ‘0’

bit 4-0 **IC1R<4:0>:** Assign Input Capture 1 (IC1) to the Corresponding RPn Pin bits

11111 = Input tied to Vss
11110 = Reserved
.
.
.
11010 = Reserved
11001 = Input tied to RP25
.
.
.
00001 = Input tied to RP1
00000 = Input tied to RP0

© 2011-2012 Microchip Technology Inc.

REGISTER 10-6: RPINR8: PERIPHERAL PIN SELECT INPUT REGISTER 8

U-0	U-0	U-0	U-0	U-0	U-0	U-0	U-0
—	—	—	—	—	—	—	—
bit 15							bit 8

U-0	U-0	U-0	R/W-1	R/W-1	R/W-1	R/W-1	R/W-1
—	—	—	IC3R<4:0>				
bit 7							bit 0

Legend:			
R = Readable bit	W = Writable bit	U = Unimplemented bit, read as ‘0’	
-n = Value at POR	‘1’ = Bit is set	‘0’ = Bit is cleared	x = Bit is unknown

bit 15-5 **Unimplemented:** Read as ‘0’

bit 4-0 **IC3R<4:0>:** Assign Input Capture 3 (IC3) to the Corresponding RPn Pin bits

11111 = Input tied to Vss
11110 = Reserved
.
.
.
11010 = Reserved
11001 = Input tied to RP25
.
.
.
00001 = Input tied to RP1
00000 = Input tied to RP0

REGISTER 10-7: RPINR11: PERIPHERAL PIN SELECT INPUT REGISTER 11

U-0	U-0	U-0	U-0	U-0	U-0	U-0	U-0
—	—	—	—	—	—	—	—
bit 15							bit 8

U-0	U-0	U-0	R/W-1	R/W-1	R/W-1	R/W-1	R/W-1
—	—	—	OCFAR<4:0>				
bit 7							bit 0

Legend:			
R = Readable bit	W = Writable bit	U = Unimplemented bit, read as ‘0’	
-n = Value at POR	‘1’ = Bit is set	‘0’ = Bit is cleared	x = Bit is unknown

bit 15-5 **Unimplemented:** Read as ‘0’

bit 4-0 **OCFAR<4:0>:** Assign Output Capture A (OCFA) to the Corresponding RPn Pin bits

11111 = Input tied to Vss
11110 = Reserved
.
.
.
11010 = Reserved
11001 = Input tied to RP25
.
.
.
00001 = Input tied to RP1
00000 = Input tied to RP0

© 2011-2012 Microchip Technology Inc.

REGISTER 10-8: RPINR18: PERIPHERAL PIN SELECT INPUT REGISTER 18

U-0	U-0	U-0	R/W-1	R/W-1	R/W-1	R/W-1	R/W-1
—	—	—	U1CTSR<4:0>				
bit 15							bit 8

U-0	U-0	U-0	R/W-1	R/W-1	R/W-1	R/W-1	R/W-1
—	—	—	U1RXR<4:0>				
bit 7							bit 0

Legend:			
R = Readable bit	W = Writable bit	U = Unimplemented bit, read as ‘0’	
-n = Value at POR	‘1’ = Bit is set	‘0’ = Bit is cleared	x = Bit is unknown

bit 15-13 **Unimplemented:** Read as ‘0’

bit 12-8 **U1CTSR<4:0>:** Assign UART1 Clear-to-Send ($\overline{\text{U1CTS}}$) to the Corresponding RPn Pin bits

11111 = Input tied to VSS
11110 = Reserved
.
.
.
11010 = Reserved
11001 = Input tied to RP25
.
.
.
00001 = Input tied to RP1
00000 = Input tied to RP0

bit 7-5 **Unimplemented:** Read as ‘0’

bit 4-0 **U1RXR<4:0>:** Assign UART1 Receive (U1RX) to the Corresponding RPn Pin bits

11111 = Input tied to VSS
11110 = Reserved
.
.
.
11010 = Reserved
11001 = Input tied to RP25
.
.
.
00001 = Input tied to RP1
00000 = Input tied to RP0

REGISTER 10-9: RPINR20: PERIPHERAL PIN SELECT INPUT REGISTER 20

U-0	U-0	U-0	R/W-1	R/W-1	R/W-1	R/W-1	R/W-1
—	—	—	SCK1R<4:0>(1)				
bit 15							bit 8

U-0	U-0	U-0	R/W-1	R/W-1	R/W-1	R/W-1	R/W-1
—	—	—	SDI1R<4:0>(1)				
bit 7							bit 0

Legend:			
R = Readable bit	W = Writable bit	U = Unimplemented bit, read as ‘0’	
-n = Value at POR	‘1’ = Bit is set	‘0’ = Bit is cleared	x = Bit is unknown

bit 15-14 **Unimplemented:** Read as ‘0’

bit 13-8 **SCK1R<4:0>:** Assign SPI1 Clock Input (SCK1IN) to the Corresponding RPn Pin bits(1)

11111 = Input tied to Vss
11110 = Reserved
.
.
.
11010 = Reserved
11001 = Input tied to RP25
.
.
.
00001 = Input tied to RP1
00000 = Input tied to RP0

bit 7-6 **Unimplemented:** Read as ‘0’

bit 5-0 **SDI1R<4:0>:** Assign SPI1 Data Input (SDI1) to the Corresponding RPn Pin bits(1)

11111 = Input tied to Vss
11110 = Reserved
.
.
.
11010 = Reserved
11001 = Input tied to RP25
.
.
.
00001 = Input tied to RP1
00000 = Input tied to RP0

Note 1: These bits are available in dsPIC33FJ32(GP/MC)10X devices only.

© 2011-2012 Microchip Technology Inc.

REGISTER 10-10: RPINR21: PERIPHERAL PIN SELECT INPUT REGISTER 21

U-0	U-0	U-0	U-0	U-0	U-0	U-0	U-0
—	—	—	—	—	—	—	—
bit 15							bit 8

U-0	U-0	U-0	R/W-1	R/W-1	R/W-1	R/W-1	R/W-1
—	—	—	SS1R<4:0>				
bit 7							bit 0

Legend:			
R = Readable bit	W = Writable bit	U = Unimplemented bit, read as ‘0’	
-n = Value at POR	‘1’ = Bit is set	‘0’ = Bit is cleared	x = Bit is unknown

bit 15-5 **Unimplemented:** Read as ‘0’

bit 4-0 **SS1R<4:0>:** Assign SPI1 Slave Select Input (SS1IN) to the Corresponding RPn Pin bits

11111 = Input tied to Vss
11110 = Reserved
.
.
.
11010 = Reserved
11001 = Input tied to RP25
.
.
.
00001 = Input tied to RP1
00000 = Input tied to RP0

REGISTER 10-11: RPOR0: PERIPHERAL PIN SELECT OUTPUT REGISTER 0

U-0	U-0	U-0	R/W-0	R/W-0	R/W-0	R/W-0	R/W-0
—	—	—	RP1R<4:0>				
bit 15							bit 8

U-0	U-0	U-0	R/W-0	R/W-0	R/W-0	R/W-0	R/W-0
—	—	—	RP0R<4:0>				
bit 7							bit 0

Legend:			
R = Readable bit	W = Writable bit	U = Unimplemented bit, read as ‘0’	
-n = Value at POR	‘1’ = Bit is set	‘0’ = Bit is cleared	x = Bit is unknown

bit 15-13 **Unimplemented:** Read as ‘0’

bit 12-8 **RP1R<4:0>:** Peripheral Output Function is Assigned to RP1 Output Pin bits (see Table 10-2 for peripheral function numbers)

bit 7-5 **Unimplemented:** Read as ‘0’

bit 4-0 **RP0R<4:0>:** Peripheral Output Function is Assigned to RP0 Output Pin bits (see Table 10-2 for peripheral function numbers)

REGISTER 10-12: RPOR1: PERIPHERAL PIN SELECT OUTPUT REGISTER 1

U-0	U-0	U-0	R/W-0	R/W-0	R/W-0	R/W-0	R/W-0
—	—	—	RP3R<4:0>(1)				
bit 15							bit 8

U-0	U-0	U-0	R/W-0	R/W-0	R/W-0	R/W-0	R/W-0
—	—	—	RP2R<4:0>(1)				
bit 7							bit 0

Legend:			
R = Readable bit	W = Writable bit	U = Unimplemented bit, read as ‘0’	
-n = Value at POR	‘1’ = Bit is set	‘0’ = Bit is cleared	x = Bit is unknown

bit 15-13 **Unimplemented:** Read as ‘0’

bit 12-8 **RP3R<4:0>:** Peripheral Output Function is Assigned to RP3 Output Pin bits(1) (see Table 10-2 for peripheral function numbers)

bit 7-5 **Unimplemented:** Read as ‘0’

bit 4-0 **RP2R<4:0>:** Peripheral Output Function is Assigned to RP2 Output Pin bits(1) (see Table 10-2 for peripheral function numbers)

Note 1: These bits are not available in dsPIC33FJXX(GP/MC)101 devices.

© 2011-2012 Microchip Technology Inc.

REGISTER 10-13: RPOR2: PERIPHERAL PIN SELECT OUTPUT REGISTER 2

U-0	U-0	U-0	R/W-0	R/W-0	R/W-0	R/W-0	R/W-0
—	—	—	RP5R<4:0>(1)				
bit 15							bit 8

U-0	U-0	U-0	R/W-0	R/W-0	R/W-0	R/W-0	R/W-0
—	—	—	RP4R<4:0>				
bit 7							bit 0

Legend:			
R = Readable bit	W = Writable bit	U = Unimplemented bit, read as ‘0’	
-n = Value at POR	‘1’ = Bit is set	‘0’ = Bit is cleared	x = Bit is unknown

bit 15-13 **Unimplemented:** Read as ‘0’

bit 12-8 **RP5R<4:0>:** Peripheral Output Function is Assigned to RP5 Output Pin bits(1)
(see Table 10-2 for peripheral function numbers)

bit 7-5 **Unimplemented:** Read as ‘0’

bit 4-0 **RP4R<4:0>:** Peripheral Output Function is Assigned to RP4 Output Pin bits
(see Table 10-2 for peripheral function numbers)

Note 1: These bits are not available in dsPIC33FJ(16/32)(GP/MC)101 devices.

REGISTER 10-14: RPOR3: PERIPHERAL PIN SELECT OUTPUT REGISTER 3

U-0	U-0	U-0	R/W-0	R/W-0	R/W-0	R/W-0	R/W-0
—	—	—	RP7R<4:0>				
bit 15							bit 8

U-0	U-0	U-0	R/W-0	R/W-0	R/W-0	R/W-0	R/W-0
—	—	—	RP6R<4:0>(1)				
bit 7							bit 0

Legend:			
R = Readable bit	W = Writable bit	U = Unimplemented bit, read as ‘0’	
-n = Value at POR	‘1’ = Bit is set	‘0’ = Bit is cleared	x = Bit is unknown

bit 15-13 **Unimplemented:** Read as ‘0’

bit 12-8 **RP7R<4:0>:** Peripheral Output Function is Assigned to RP7 Output Pin bits
(see Table 10-2 for peripheral function numbers)

bit 7-5 **Unimplemented:** Read as ‘0’

bit 4-0 **RP6R<4:0>:** Peripheral Output Function is Assigned to RP6 Output Pin bits(1)
(see Table 10-2 for peripheral function numbers)

Note 1: These bits are not available in dsPIC33FJ(16/32)(GP/MC)101 devices.

REGISTER 10-15: RPOR4: PERIPHERAL PIN SELECT OUTPUT REGISTER 4

U-0	U-0	U-0	R/W-0	R/W-0	R/W-0	R/W-0	R/W-0
—	—	—	RP9R<4:0>				
bit 15							bit 8

U-0	U-0	U-0	R/W-0	R/W-0	R/W-0	R/W-0	R/W-0
—	—	—	RP8R<4:0>				
bit 7							bit 0

Legend:			
R = Readable bit	W = Writable bit	U = Unimplemented bit, read as ‘0’	
-n = Value at POR	‘1’ = Bit is set	‘0’ = Bit is cleared	x = Bit is unknown

bit 15-13 **Unimplemented:** Read as ‘0’

bit 12-8 **RP9R<4:0>:** Peripheral Output Function is Assigned to RP9 Output Pin bits (see Table 10-2 for peripheral function numbers)

bit 7-5 **Unimplemented:** Read as ‘0’

bit 4-0 **RP8R<4:0>:** Peripheral Output Function is Assigned to RP8 Output Pin bits (see Table 10-2 for peripheral function numbers)

REGISTER 10-16: RPOR5: PERIPHERAL PIN SELECT OUTPUT REGISTER 5

U-0	U-0	U-0	R/W-0	R/W-0	R/W-0	R/W-0	R/W-0
—	—	—	RP11R<4:0>(1)				
bit 15							bit 8

U-0	U-0	U-0	R/W-0	R/W-0	R/W-0	R/W-0	R/W-0
—	—	—	RP10R<4:0>(1)				
bit 7							bit 0

Legend:			
R = Readable bit	W = Writable bit	U = Unimplemented bit, read as ‘0’	
-n = Value at POR	‘1’ = Bit is set	‘0’ = Bit is cleared	x = Bit is unknown

bit 15-13 **Unimplemented:** Read as ‘0’

bit 12-8 **RP11R<4:0>:** Peripheral Output Function is Assigned to RP11 Output Pin bits(1) (see Table 10-2 for peripheral function numbers)

bit 7-5 **Unimplemented:** Read as ‘0’

bit 4-0 **RP10R<4:0>:** Peripheral Output Function is Assigned to RP10 Output Pin bits(1) (see Table 10-2 for peripheral function numbers)

Note 1: These bits are not available in dsPIC33FJXX(GP/MC)101 devices.

© 2011-2012 Microchip Technology Inc.

REGISTER 10-17: RPOR6: PERIPHERAL PIN SELECT OUTPUT REGISTER 6

U-0	U-0	U-0	R/W-0	R/W-0	R/W-0	R/W-0	R/W-0
—	—	—	RP13R<4:0>(1)				
bit 15							bit 8

U-0	U-0	U-0	R/W-0	R/W-0	R/W-0	R/W-0	R/W-0
—	—	—	RP12R<4:0>(1)				
bit 7							bit 0

Legend:			
R = Readable bit	W = Writable bit	U = Unimplemented bit, read as ‘0’	
-n = Value at POR	‘1’ = Bit is set	‘0’ = Bit is cleared	x = Bit is unknown

bit 15-13 **Unimplemented:** Read as ‘0’

bit 12-8 **RP13R<4:0>:** Peripheral Output Function is Assigned to RP13 Output Pin bits(1)
(see Table 10-2 for peripheral function numbers)

bit 7-5 **Unimplemented:** Read as ‘0’

bit 4-0 **RP12R<4:0>:** Peripheral Output Function is Assigned to RP12 Output Pin bits(1)
(see Table 10-2 for peripheral function numbers)

Note 1: These bits are not available in dsPIC33FJXXGP101 devices.

REGISTER 10-18: RPOR7: PERIPHERAL PIN SELECT OUTPUT REGISTER 7

U-0	U-0	U-0	R/W-0	R/W-0	R/W-0	R/W-0	R/W-0
—	—	—	RP15R<4:0>				
bit 15							bit 8

U-0	U-0	U-0	R/W-0	R/W-0	R/W-0	R/W-0	R/W-0
—	—	—	RP14R<4:0>				
bit 7							bit 0

Legend:			
R = Readable bit	W = Writable bit	U = Unimplemented bit, read as ‘0’	
-n = Value at POR	‘1’ = Bit is set	‘0’ = Bit is cleared	x = Bit is unknown

bit 15-13 **Unimplemented:** Read as ‘0’

bit 12-8 **RP15R<4:0>:** Peripheral Output Function is Assigned to RP15 Output Pin bits
(see Table 10-2 for peripheral function numbers)

bit 7-5 **Unimplemented:** Read as ‘0’

bit 4-0 **RP14R<4:0>:** Peripheral Output Function is Assigned to RP14 Output Pin bits
(see Table 10-2 for peripheral function numbers)

REGISTER 10-19: RPOR8: PERIPHERAL PIN SELECT OUTPUT REGISTER 8

U-0	U-0	U-0	R/W-0	R/W-0	R/W-0	R/W-0	R/W-0
—	—	—	RP17R<4:0>(1)				
bit 15							bit 8

U-0	U-0	U-0	R/W-0	R/W-0	R/W-0	R/W-0	R/W-0
—	—	—	RP16R<4:0>(1)				
bit 7							bit 0

Legend:			
R = Readable bit	W = Writable bit	U = Unimplemented bit, read as ‘0’	
-n = Value at POR	‘1’ = Bit is set	‘0’ = Bit is cleared	x = Bit is unknown

bit 15-13 **Unimplemented:** Read as ‘0’

bit 12-8 **RP17R<4:0>:** Peripheral Output Function is Assigned to RP17 Output Pin bits(1)
(see Table 10-2 for peripheral function numbers)

bit 7-5 **Unimplemented:** Read as ‘0’

bit 4-0 **RP16R<4:0>:** Peripheral Output Function is Assigned to RP16 Output Pin bits(1)
(see Table 10-2 for peripheral function numbers)

Note 1: These bits are available in dsPIC33FJ32(GP/MC)104 devices only.

REGISTER 10-20: RPOR9: PERIPHERAL PIN SELECT OUTPUT REGISTER 9

U-0	U-0	U-0	R/W-0	R/W-0	R/W-0	R/W-0	R/W-0
—	—	—	RP19R<4:0>(1)				
bit 15							bit 8

U-0	U-0	U-0	R/W-0	R/W-0	R/W-0	R/W-0	R/W-0
—	—	—	RP18R<4:0>(1)				
bit 7							bit 0

Legend:			
R = Readable bit	W = Writable bit	U = Unimplemented bit, read as ‘0’	
-n = Value at POR	‘1’ = Bit is set	‘0’ = Bit is cleared	x = Bit is unknown

bit 15-13 **Unimplemented:** Read as ‘0’

bit 12-8 **RP19R<4:0>:** Peripheral Output Function is Assigned to RP19 Output Pin bits(1)
(see Table 10-2 for peripheral function numbers)

bit 7-5 **Unimplemented:** Read as ‘0’

bit 4-0 **RP18R<4:0>:** Peripheral Output Function is Assigned to RP18 Output Pin bits(1)
(see Table 10-2 for peripheral function numbers)

Note 1: These bits are available in dsPIC33FJ32(GP/MC)104 devices only.

© 2011-2012 Microchip Technology Inc.

REGISTER 10-21: RPOR10: PERIPHERAL PIN SELECT OUTPUT REGISTER 10

U-0	U-0	U-0	R/W-0	R/W-0	R/W-0	R/W-0	R/W-0
—	—	—	RP21R<4:0>(1)				
bit 15							bit 8

U-0	U-0	U-0	R/W-0	R/W-0	R/W-0	R/W-0	R/W-0
—	—	—	RP20R<4:0>(1)				
bit 7							bit 0

Legend:			
R = Readable bit	W = Writable bit	U = Unimplemented bit, read as ‘0’	
-n = Value at POR	‘1’ = Bit is set	‘0’ = Bit is cleared	x = Bit is unknown

bit 15-13 **Unimplemented:** Read as ‘0’

bit 12-8 **RP21R<4:0>:** Peripheral Output Function is Assigned to RP21 Output Pin bits(1) (see Table 10-2 for peripheral function numbers)

bit 7-5 **Unimplemented:** Read as ‘0’

bit 4-0 **RP20R<4:0>:** Peripheral Output Function is Assigned to RP20 Output Pin bits(1) (see Table 10-2 for peripheral function numbers)

Note 1: These bits are available in dsPIC33FJ32(GP/MC)104 devices only.

REGISTER 10-22: RPOR11: PERIPHERAL PIN SELECT OUTPUT REGISTER 11

U-0	U-0	U-0	R/W-0	R/W-0	R/W-0	R/W-0	R/W-0
—	—	—	RP23R<4:0>(1)				
bit 15							bit 8

U-0	U-0	U-0	R/W-0	R/W-0	R/W-0	R/W-0	R/W-0
—	—	—	RP22R<4:0>(1)				
bit 7							bit 0

Legend:			
R = Readable bit	W = Writable bit	U = Unimplemented bit, read as ‘0’	
-n = Value at POR	‘1’ = Bit is set	‘0’ = Bit is cleared	x = Bit is unknown

bit 15-13 **Unimplemented:** Read as ‘0’

bit 12-8 **RP23R<4:0>:** Peripheral Output Function is Assigned to RP23 Output Pin bits(1) (see Table 10-2 for peripheral function numbers)

bit 7-5 **Unimplemented:** Read as ‘0’

bit 4-0 **RP22R<4:0>:** Peripheral Output Function is Assigned to RP22 Output Pin bits(1) (see Table 10-2 for peripheral function numbers)

Note 1: These bits are available in dsPIC33FJ32(GP/MC)104 devices only.

REGISTER 10-23: RPOR12: PERIPHERAL PIN SELECT OUTPUT REGISTER 12

U-0	U-0	U-0	R/W-0	R/W-0	R/W-0	R/W-0	R/W-0
—	—	—	RP25R<4:0>(1)				
bit 15							bit 8

U-0	U-0	U-0	R/W-0	R/W-0	R/W-0	R/W-0	R/W-0
—	—	—	RP24R<4:0>(1)				
bit 7							bit 0

Legend:			
R = Readable bit	W = Writable bit	U = Unimplemented bit, read as ‘0’	
-n = Value at POR	‘1’ = Bit is set	‘0’ = Bit is cleared	x = Bit is unknown

bit 15-13 **Unimplemented:** Read as ‘0’

bit 12-8 **RP25R<4:0>:** Peripheral Output Function is Assigned to RP25 Output Pin bits(1)
(see Table 10-2 for peripheral function numbers)

bit 7-5 **Unimplemented:** Read as ‘0’

bit 4-0 **RP24R<4:0>:** Peripheral Output Function is Assigned to RP24 Output Pin bits(1)
(see Table 10-2 for peripheral function numbers)

Note 1: These bits are available in dsPIC33FJ32(GP/MC)104 devices only.

© 2011-2012 Microchip Technology Inc.

11.0 TIMER1

Note 1: This data sheet summarizes the features of the dsPIC33FJ16(GP/MC)101/102 and dsPIC33FJ32(GP/MC)101/102/104 family devices. It is not intended to be a comprehensive reference source. To complement the information in this data sheet, refer to **Section 11. "Timers"** (DS70205) in the *"dsPIC33F/PIC24H Family Reference Manual"*, which is available from the Microchip web site (www.microchip.com).

2: Some registers and associated bits described in this section may not be available on all devices. Refer to **Section 4.0 "Memory Organization"** in this data sheet for device-specific register and bit information.

The Timer1 module is a 16-bit timer, which can serve as the time counter for the Real-Time Clock (RTC) or operate as a free-running interval timer/counter. Timer1 can operate in three modes:

- 16-bit Timer
- 16-bit Synchronous Counter
- 16-bit Asynchronous Counter

Timer1 also supports these features:

- Timer gate operation
- Selectable prescaler settings
- Timer operation during CPU Idle and Sleep modes
- Interrupt on 16-bit Period register match or falling edge of external gate signal

Figure 11-1 presents a block diagram of the 16-bit timer module.

To configure Timer1 for operation:

1. Load the timer value into the TMR1 register.
2. Load the timer period value into the PR1 register.
3. Select the timer prescaler ratio using the TCKPS<1:0> bits in the T1CON register.
4. Set the Clock and Gating modes using the TCS and TGATE bits in the T1CON register.
5. Set or clear the TSYNC bit in T1CON to select synchronous or asynchronous operation.
6. If interrupts are required, set the Timer1 Interrupt Enable bit, T1IE. Use the Timer1 Interrupt Priority bits, T1IP<2:0>, to set the interrupt priority.
7. Set the TON bit (= 1) in the T1CON register.

FIGURE 11-1: 16-BIT TIMER1 MODULE BLOCK DIAGRAM

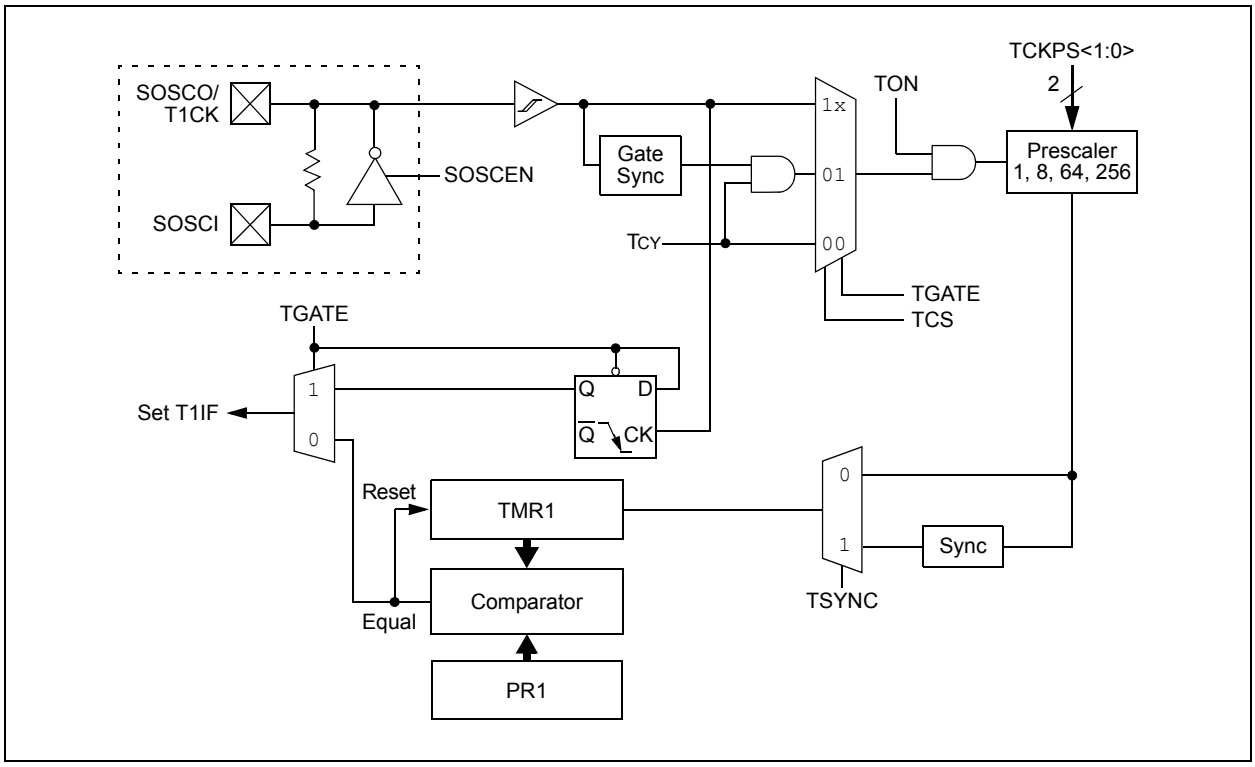

11.1 Timer1 Control Register

REGISTER 11-1: T1CON: TIMER1 CONTROL REGISTER

R/W-0	U-0	R/W-0	U-0	U-0	U-0	U-0	U-0
TON(1)	—	TSIDL	—	—	—	—	—
bit 15							bit 8

U-0	R/W-0	R/W-0	R/W-0	U-0	R/W-0	R/W-0	U-0
—	TGATE	TCKPS<1:0>		—	TSYNC	TCS(1)	—
bit 7							bit 0

Legend:			
R = Readable bit	W = Writable bit	U = Unimplemented bit, read as ‘0’	
-n = Value at POR	‘1’ = Bit is set	‘0’ = Bit is cleared	x = Bit is unknown

bit 15 **TON:** Timer1 On bit(1)
1 = Starts 16-bit Timer1
0 = Stops 16-bit Timer1

bit 14 **Unimplemented:** Read as ‘0’

bit 13 **TSIDL:** Timer1 Stop in Idle Mode bit
1 = Discontinues module operation when device enters Idle mode
0 = Continues module operation in Idle mode

bit 12-7 **Unimplemented:** Read as ‘0’

bit 6 **TGATE:** Timer1 Gated Time Accumulation Enable bit
When TCS = 1:
This bit is ignored.
When TCS = 0:
1 = Gated time accumulation is enabled
0 = Gated time accumulation is disabled

bit 5-4 **TCKPS<1:0>** Timer1 Input Clock Prescale Select bits
11 = 1:256
10 = 1:64
01 = 1:8
00 = 1:1

bit 3 **Unimplemented:** Read as ‘0’

bit 2 **TSYNC:** Timer1 External Clock Input Synchronization Select bit
When TCS = 1:
1 = Synchronizes external clock input
0 = Does not synchronize external clock input
When TCS = 0:
This bit is ignored.

bit 1 **TCS:** Timer1 Clock Source Select bit(1)
1 = External clock from pin, T1CK (on the rising edge)
0 = Internal clock (FCY)

bit 0 **Unimplemented:** Read as ‘0’

Note 1: When TCS = 1 and TON = 1, writes to the TMR1 register are inhibited from the CPU.

© 2011-2012 Microchip Technology Inc.

12.0 TIMER2/3 AND TIMER4/5

Note 1: This data sheet summarizes the features of the dsPIC33FJ16(GP/MC)101/102 and dsPIC33FJ32(GP/MC)101/102/104 family devices. It is not intended to be a comprehensive reference source. To complement the information in this data sheet, refer to **Section 11. "Timers"** (DS70205) in the *"dsPIC33F/PIC24H Family Reference Manual"*, which is available from the Microchip web site (www.microchip.com).

2: Some registers and associated bits described in this section may not be available on all devices. Refer to **Section 4.0 "Memory Organization"** in this data sheet for device-specific register and bit information.

Timer2/3 and Timer4/5 have three 2-bit timers that can also be configured as two independent 16-bit timers with selectable operating modes.

Note 1: Timer4 and Timer5 are available in dsPIC33FJ32(GP/MC10X) devices only.

As a 32-bit timer, Timer2/3 and Timer4/5 permit operation in three modes:

- Two independent 16-bit timers (e.g., Timer2 and Timer3 or Timer4 and Timer5) with all 16-bit operating modes (except Asynchronous Counter mode)
- Single 32-bit timer (Timer2/3 and Timer4/5)
- Single 32-bit synchronous counter (Timer2/3 and Timer4/5)

Timer2/3 and Timer4/5 also support:

- Timer gate operation
- Selectable prescaler settings
- Timer operation during Idle and Sleep modes
- Interrupt on a 32-bit Period register match
- Time base for input capture and output compare modules (Timer2 and Timer3 only)
- ADC1 event trigger (Timer2/3 only)

Individually, all eight of the 16-bit timers can function as synchronous timers or counters. They also offer the features listed above, except for the event trigger. The operating modes and enabled features are determined by setting the appropriate bit(s) in the T2CON, T3CON, T4CON and T5CON registers (see Register 12-1 through Register 12-2).

For 32-bit timer/counter operation, Timer2/4 is the least significant word (lsw) and Timer3/5 is the most significant word (msw) of the 32-bit timers.

Note: For 32-bit operation, T3CON and T5CON control bits are ignored. Only T2CON and T4CON control bits are used for setup and control. Timer2 and Timer4 clock and gate inputs are used for the 32-bit timer modules, but an interrupt is generated with the Timer3 and Timer5 interrupt flags.

12.1 32-Bit Operation

To configure Timer2/3 and Timer4/5 for 32-bit operation:

1. Set the T32 control bit.
2. Select the prescaler ratio for Timer2 or Timer4 using the TCKPS<1:0> bits.
3. Set the Clock and Gating modes using the corresponding TCS and TGATE bits.
4. Load the timer period value. PR3/PR5 contains the msw of the value, while PR2/PR4 contains the least significant word (lsw).
5. If interrupts are required, set the interrupt enable bit, T3IE or T5IE. Use the priority bits, T3IP<2:0> or T5IP<2:0>, to set the interrupt priority. While Timer2/Timer4 controls the timer, the interrupt appears as a Timer3/Timer5 interrupt.
6. Set the corresponding TON bit.

The timer value at any point is stored in the register pair, TMR3:TMR2 or TMR5:TMR4, which always contains the msw of the count, while TMR2 or TMR4 contains the lsw.

12.2 16-Bit Operation

To configure any of the timers for individual 16-bit operation:

1. Clear the T32 bit corresponding to that timer.
2. Select the timer prescaler ratio using the TCKPS<1:0> bits.
3. Set the Clock and Gating modes using the TCS and TGATE bits.
4. Load the timer period value into the PRx register.
5. If interrupts are required, set the interrupt enable bit, TxIE. Use the priority bits, TxIP<2:0>, to set the interrupt priority.
6. Set the TON bit.

FIGURE 12-1: TIMER2/3 AND TIMER4/5 (32-BIT) BLOCK DIAGRAM(1,3,4)

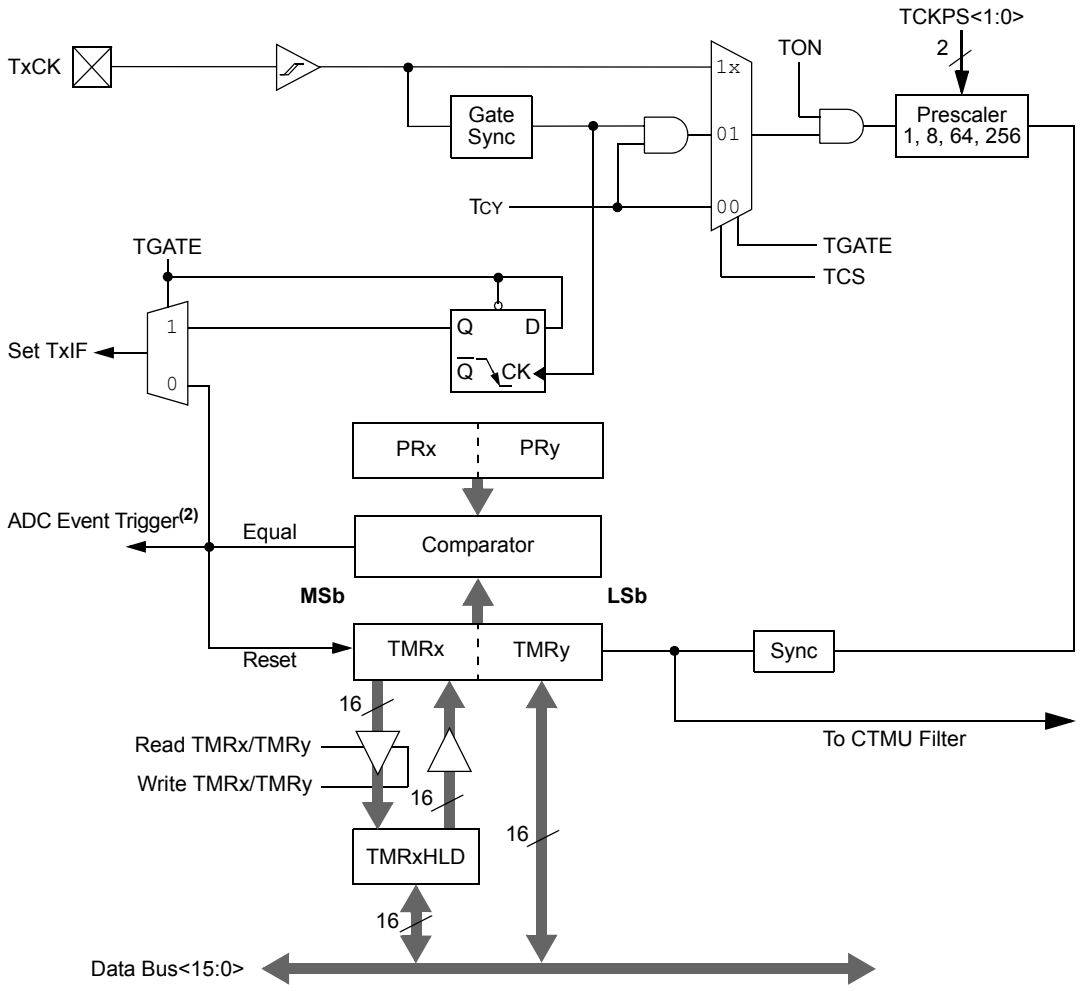

Note 1: The 32-bit timer control bit, T32, must be set for 32-bit timer/counter operation. All control bits are respective to the TxCON register.

2: The ADC event trigger is available only on Timer2/3.

3: Timer4/5 is available in dsPIC33FJ32(GP/MC)10X devices only.

4: Where ‘x’ or ‘y’ are present, x = 2 or 4; y = 3 or 5.

© 2011-2012 Microchip Technology Inc.

FIGURE 12-2: TIMER2 AND TIMER4 (16-BIT) BLOCK DIAGRAM(1)

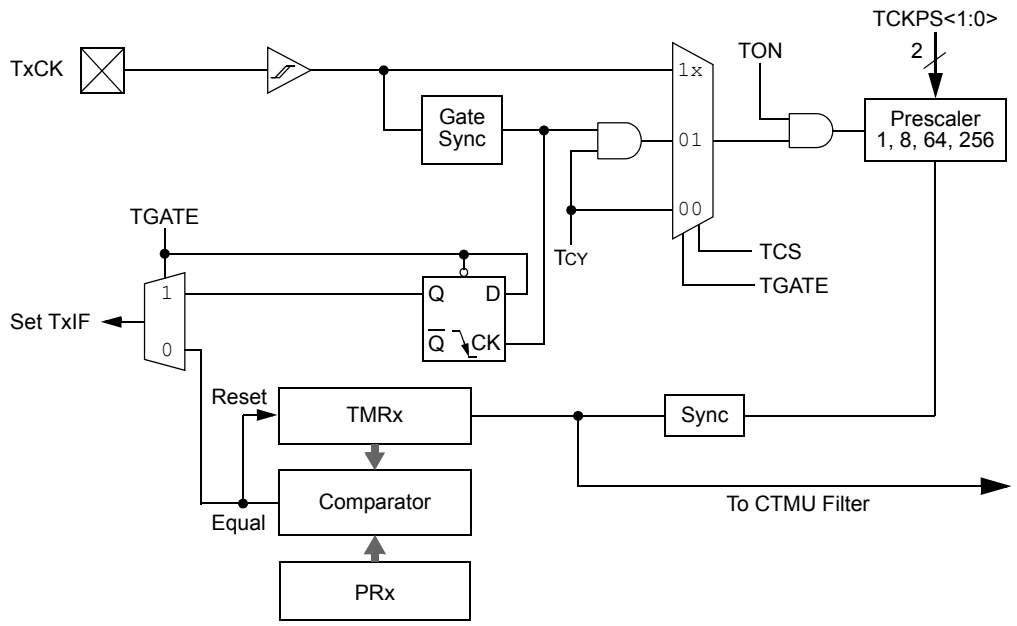

Note 1: Timer4 is available in dsPIC33FJ32(GP/MC)10X devices only.

FIGURE 12-3: TIMER3 AND TIMER5 (16-BIT) BLOCK DIAGRAM(1)

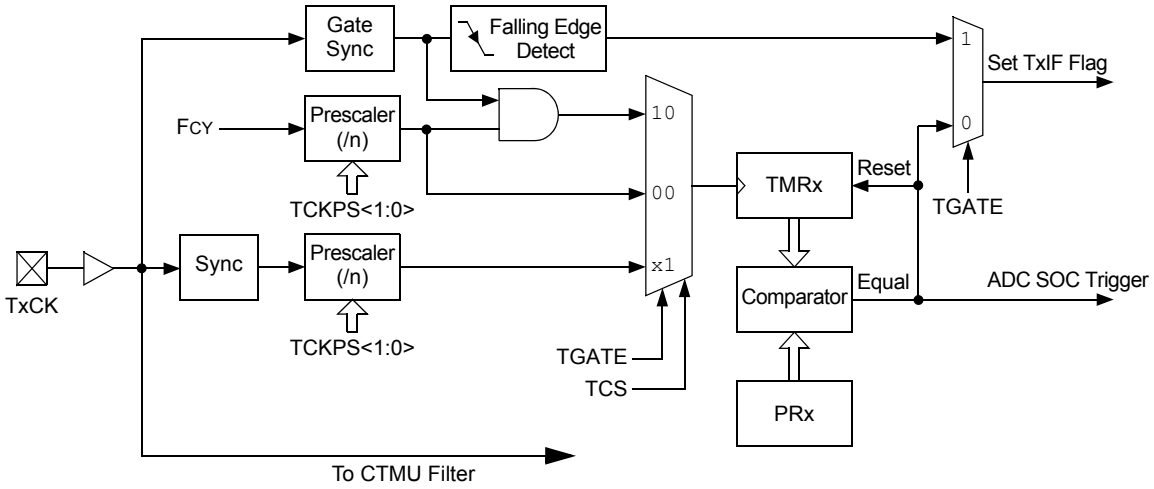

Note 1: Timer5 is available in dsPIC33FJ32(GP/MC)10X devices only.

12.3 Timer2/3 and Timer4/5 Control Registers

REGISTER 12-1: T2CON CONTROL REGISTER

R/W-0	U-0	R/W-0	U-0	U-0	U-0	U-0	U-0
TON	—	TSIDL	—	—	—	—	—
bit 15							bit 8

U-0	R/W-0	R/W-0	R/W-0	R/W-0	U-0	R/W-0	U-0
—	TGATE	TCKPS<1:0>		T32	—	TCS	—
bit 7							bit 0

Legend:			
R = Readable bit	W = Writable bit	U = Unimplemented bit, read as ‘0’	
-n = Value at POR	‘1’ = Bit is set	‘0’ = Bit is cleared	x = Bit is unknown

bit 15 **TON:** Timer2 On bit
When T32 = 1:
1 = Starts 32-bit Timer2/3
0 = Stops 32-bit Timer2/3
When T32 = 0:
1 = Starts 16-bit Timer2
0 = Stops 16-bit Timer2

bit 14 **Unimplemented:** Read as ‘0’

bit 13 **TSIDL:** Timer2 Stop in Idle Mode bit
1 = Discontinues module operation when device enters Idle mode
0 = Continues module operation in Idle mode

bit 12-7 **Unimplemented:** Read as ‘0’

bit 6 **TGATE:** Timer2 Gated Time Accumulation Enable bit
When TCS = 1:
This bit is ignored.
When TCS = 0:
1 = Gated time accumulation is enabled
0 = Gated time accumulation is disabled

bit 5-4 **TCKPS<1:0>:** Timer2 Input Clock Prescale Select bits
11 = 1:256
10 = 1:64
01 = 1:8
00 = 1:1

bit 3 **T32:** 32-Bit Timer Mode Select bit
1 = Timer2 and Timer3 form a single 32-bit timer
0 = Timer2 and Timer3 act as two 16-bit timers

bit 2 **Unimplemented:** Read as ‘0’

bit 1 **TCS:** Timer2 Clock Source Select bit
1 = External clock from pin, T2CK (on the rising edge)
0 = Internal clock (FCY)

bit 0 **Unimplemented:** Read as ‘0’

© 2011-2012 Microchip Technology Inc.

REGISTER 12-2: T3CON CONTROL REGISTER

R/W-0	U-0	R/W-0	U-0	U-0	U-0	U-0	U-0
TON(2)	—	TSIDL(1)	—	—	—	—	—
bit 15							bit 8

U-0	R/W-0	R/W-0	R/W-0	U-0	U-0	R/W-0	U-0
—	TGATE(2)	TCKPS<1:0>(2)		—	—	TCS(2)	—
bit 7							bit 0

Legend:			
R = Readable bit	W = Writable bit	U = Unimplemented bit, read as ‘0’	
-n = Value at POR	‘1’ = Bit is set	‘0’ = Bit is cleared	x = Bit is unknown

bit 15 **TON:** Timer3 On bit(2)
1 = Starts 16-bit Timer3
0 = Stops 16-bit Timer3

bit 14 **Unimplemented:** Read as ‘0’

bit 13 **TSIDL:** Timer3 Stop in Idle Mode bit(1)
1 = Discontinues timer operation when device enters Idle mode
0 = Continues timer operation in Idle mode

bit 12-7 **Unimplemented:** Read as ‘0’

bit 6 **TGATE:** Timer3 Gated Time Accumulation Enable bit(2)
When TCS = 1:
This bit is ignored.
When TCS = 0:
1 = Gated time accumulation is enabled
0 = Gated time accumulation is disabled

bit 5-4 **TCKPS<1:0>:** Timer3 Input Clock Prescale Select bits(2)
11 = 1:256 prescale value
10 = 1:64 prescale value
01 = 1:8 prescale value
00 = 1:1 prescale value

bit 3-2 **Unimplemented:** Read as ‘0’

bit 1 **TCS:** Timer3 Clock Source Select bit(2)
1 = External clock from T3CK pin
0 = Internal clock (FOSC/2)

bit 0 **Unimplemented:** Read as ‘0’

Note 1: When 32-bit timer operation is enabled (T32 = 1) in the Timer2 Control register (T2CON<3>), the TSIDL bit must be cleared to operate the 32-bit timer in Idle mode.

2: When the 32-bit timer operation is enabled (T32 = 1) in the Timer2 Control register (T2CON<3>), these bits have no effect.

REGISTER 12-3: T4CON CONTROL REGISTER[1]

R/W-0	U-0	R/W-0	U-0	U-0	U-0	U-0	U-0
TON	—	TSIDL	—	—	—	—	—
bit 15							bit 8

U-0	R/W-0	R/W-0	R/W-0	R/W-0	U-0	R/W-0	U-0
—	TGATE	TCKPS<1:0>		T32	—	TCS	—
bit 7							bit 0

Legend:			
R = Readable bit	W = Writable bit	U = Unimplemented bit, read as ‘0’	
-n = Value at POR	‘1’ = Bit is set	‘0’ = Bit is cleared	x = Bit is unknown

bit 15 **TON:** Timer4 On bit
When T32 = 1:
1 = Starts 32-bit Timer4/5
0 = Stops 32-bit Timer4/5
When T32 = 0:
1 = Starts 16-bit Timer4
0 = Stops 16-bit Timer4

bit 14 **Unimplemented:** Read as ‘0’

bit 13 **TSIDL:** Timer4 Stop in Idle Mode bit
1 = Discontinues module operation when device enters Idle mode
0 = Continues module operation in Idle mode

bit 12-7 **Unimplemented:** Read as ‘0’

bit 6 **TGATE:** Timer4 Gated Time Accumulation Enable bit
When TCS = 1:
This bit is ignored.
When TCS = 0:
1 = Gated time accumulation is enabled
0 = Gated time accumulation is disabled

bit 5-4 **TCKPS<1:0>:** Timer4 Input Clock Prescale Select bits
11 = 1:256
10 = 1:64
01 = 1:8
00 = 1:1

bit 3 **T32:** 32-Bit Timer Mode Select bit
1 = Timer4 and Timer5 form a single 32-bit timer
0 = Timer4 and Timer5 act as two 16-bit timers

bit 2 **Unimplemented:** Read as ‘0’

bit 1 **TCS:** Timer4 Clock Source Select bit
1 = External clock from pin, T4CK (on the rising edge)
0 = Internal clock (FCY)

bit 0 **Unimplemented:** Read as ‘0’

Note 1: This register is available in dsPIC33FJ32(GP/MC)10X devices only.

© 2011-2012 Microchip Technology Inc.

REGISTER 12-4: T5CON CONTROL REGISTER(1)

R/W-0	U-0	R/W-0	U-0	U-0	U-0	U-0	U-0
TON(3)	—	TSIDL(2)	—	—	—	—	—
bit 15							bit 8

U-0	R/W-0	R/W-0	R/W-0	U-0	U-0	R/W-0	U-0
—	TGATE(3)	TCKPS<1:0>(3)		—	—	TCS(3)	—
bit 7							bit 0

Legend:			
R = Readable bit	W = Writable bit	U = Unimplemented bit, read as ‘0’	
-n = Value at POR	‘1’ = Bit is set	‘0’ = Bit is cleared	x = Bit is unknown

bit 15 **TON:** Timer5 On bit(3)
1 = Starts 16-bit Timer3
0 = Stops 16-bit Timer3

bit 14 **Unimplemented:** Read as ‘0’

bit 13 **TSIDL:** Timer5 Stop in Idle Mode bit(2)
1 = Discontinues timer operation when device enters Idle mode
0 = Continues timer operation in Idle mode

bit 12-7 **Unimplemented:** Read as ‘0’

bit 6 **TGATE:** Timer5 Gated Time Accumulation Enable bit(3)
When TCS = 1:
This bit is ignored.
When TCS = 0:
1 = Gated time accumulation is enabled
0 = Gated time accumulation is disabled

bit 5-4 **TCKPS<1:0>:** Timer5 Input Clock Prescale Select bits(3)
11 = 1:256 prescale value
10 = 1:64 prescale value
01 = 1:8 prescale value
00 = 1:1 prescale value

bit 3-2 **Unimplemented:** Read as ‘0’

bit 1 **TCS:** Timer5 Clock Source Select bit(3)
1 = External clock from T5CK pin
0 = Internal clock (FOSC/2)

bit 0 **Unimplemented:** Read as ‘0’

Note 1: This register is available in dsPIC33FJ32(GP/MC)10X devices only.

2: When 32-bit timer operation is enabled (T32 = 1) in the Timer4 Control register (T4CON<3>), the TSIDL bit must be cleared to operate the 32-bit timer in Idle mode.

3: When the 32-bit timer operation is enabled (T32 = 1) in the Timer4 Control register (T4CON<3>), these bits have no effect.

NOTES:

© 2011-2012 Microchip Technology Inc.

13.0 INPUT CAPTURE

Note 1: This data sheet summarizes the features of the dsPIC33FJ16(GP/MC)101/102 and dsPIC33FJ32(GP/MC)101/102/104 family devices. It is not intended to be a comprehensive reference source. To complement the information in this data sheet, refer to **Section 12. "Input Capture"** (DS70198) in the *"dsPIC33F/PIC24H Family Reference Manual"*, which is available from the Microchip web site (www.microchip.com).

2: Some registers and associated bits described in this section may not be available on all devices. Refer to **Section 4.0 "Memory Organization"** in this data sheet for device-specific register and bit information.

The input capture module is useful in applications requiring frequency (period) and pulse measurement. The dsPIC33FJ16(GP/MC)101/102 and dsPIC33FJ32(GP/MC)101/102/104 devices support up to three input capture channels.

The input capture module captures the 16-bit value of the selected Time Base register when an event occurs at the ICx pin. The events that cause a capture event are listed below in three categories:

1. Simple Capture Event modes:
   - Capture timer value on every falling edge of input at ICx pin
   - Capture timer value on every rising edge of input at ICx pin
2. Capture timer value on every edge (rising and falling)
3. Prescaler Capture Event modes:
   - Capture timer value on every 4th rising edge of input at ICx pin
   - Capture timer value on every 16th rising edge of input at ICx pin

Each input capture channel can select one of two 16-bit timers (Timer2 or Timer3) for the time base. The selected timer can use either an internal or external clock.

Other operational features include:

- Device wake-up from capture pin during CPU Sleep and Idle modes
- Interrupt on input capture event
- 4-word FIFO buffer for capture values:
  - Interrupt optionally generated after 1, 2, 3 or 4 buffer locations are filled
- Use of input capture to provide additional sources of external interrupts

FIGURE 13-1: INPUT CAPTURE BLOCK DIAGRAM

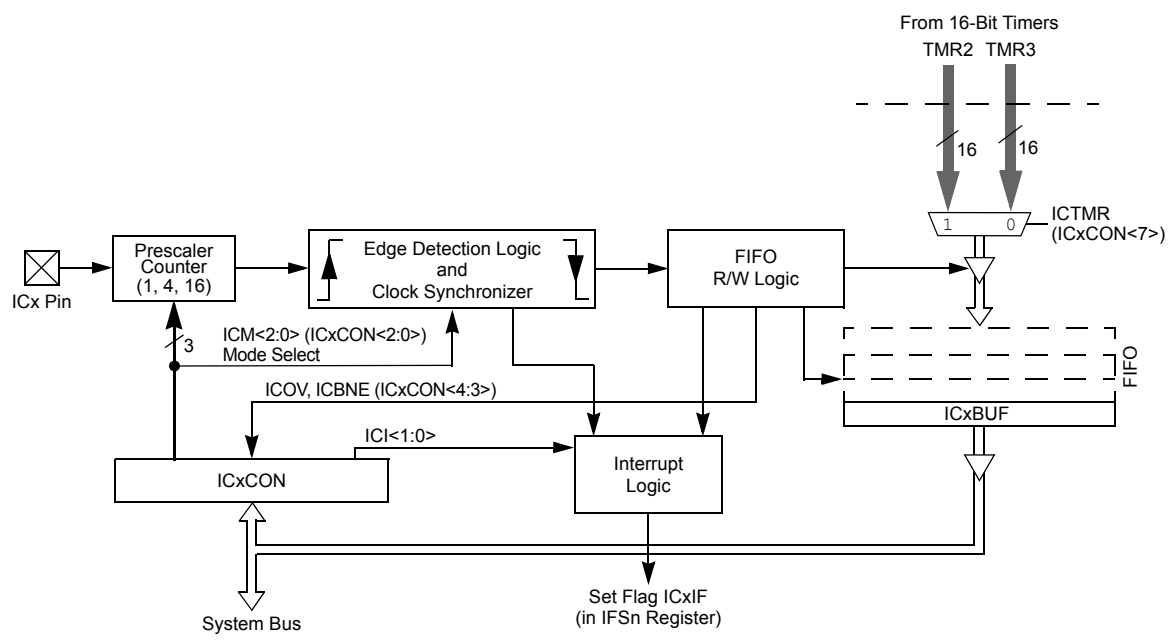

Note: An 'x' in a signal, register or bit name denotes the number of the capture channel.

13.1 Input Capture Register

REGISTER 13-1: ICxCON: INPUT CAPTURE x CONTROL REGISTER

U-0	U-0	R/W-0	U-0	U-0	U-0	U-0	U-0
—	—	ICSIDL	—	—	—	—	—
bit 15							bit 8

R/W-0	R/W-0	R/W-0	R-0, HC	R-0, HC	R/W-0	R/W-0	R/W-0
ICTMR	ICI<1:0>		ICOV	ICBNE	ICM<2:0>		
bit 7							bit 0

Legend:			
R = Readable bit	W = Writable bit	U = Unimplemented bit, read as ‘0’	
-n = Value at POR	‘1’ = Bit is set	‘0’ = Bit is cleared	x = Bit is unknown

bit 15-14 **Unimplemented:** Read as ‘0’

bit 13 **ICSIDL:** Input Capture Stop in Idle Control bit
1 = Input capture module will halt in CPU Idle mode
0 = Input capture module will continue to operate in CPU Idle mode

bit 12-8 **Unimplemented:** Read as ‘0’

bit 7 **ICTMR:** Input Capture Timer Select bits
1 = TMR2 contents are captured on capture event
0 = TMR3 contents are captured on capture event

bit 6-5 **ICI<1:0>:** Select Number of Captures per Interrupt bits
11 = Interrupt on every fourth capture event
10 = Interrupt on every third capture event
01 = Interrupt on every second capture event
00 = Interrupt on every capture event

bit 4 **ICOV:** Input Capture Overflow Status Flag bit (read-only)
1 = Input capture overflow occurred
0 = No input capture overflow occurred

bit 3 **ICBNE:** Input Capture Buffer Empty Status bit (read-only)
1 = Input capture buffer is not empty, at least one more capture value can be read
0 = Input capture buffer is empty

bit 2-0 **ICM<2:0>:** Input Capture Mode Select bits
111 = Input capture functions as interrupt pin only when device is in Sleep or Idle mode (Rising edge detect only, all other control bits are not applicable.)
110 = Unused (module disabled)
101 = Capture mode, every 16th rising edge
100 = Capture mode, every 4th rising edge
011 = Capture mode, every rising edge
010 = Capture mode, every falling edge
001 = Capture mode, every edge (rising and falling) (ICI<1:0> bits do not control interrupt generation for this mode.)
000 = Input capture module turned off

© 2011-2012 Microchip Technology Inc.

14.0 OUTPUT COMPARE

Note 1: This data sheet summarizes the features of the dsPIC33FJ16(GP/MC)101/102 and dsPIC33FJ32(GP/MC)101/102/104 family devices. It is not intended to be a comprehensive reference source. To complement the information in this data sheet, refer to **Section 13. "Output Compare"** (DS70209) of the *"dsPIC33F/PIC24H Family Reference Manual"*, which is available from the Microchip web site (www.microchip.com).

2: Some registers and associated bits described in this section may not be available on all devices. Refer to **Section 4.0 "Memory Organization"** in this data sheet for device-specific register and bit information.

The output compare module can select either Timer2 or Timer3 for its time base. The module compares the value of the timer with the value of one or two compare registers depending on the operating mode selected. The state of the output pin changes when the timer value matches the Compare register value. The output compare module generates either a single output pulse, or a sequence of output pulses, by changing the state of the output pin on the compare match events. The output compare module can also generate interrupts on compare match events.

The output compare module has multiple operating modes:

- Active-Low One-Shot mode
- Active-High One-Shot mode
- Toggle mode
- Delayed One-Shot mode
- Continuous Pulse mode
- PWM mode without Fault protection
- PWM mode with Fault protection

FIGURE 14-1: OUTPUT COMPARE MODULE BLOCK DIAGRAM

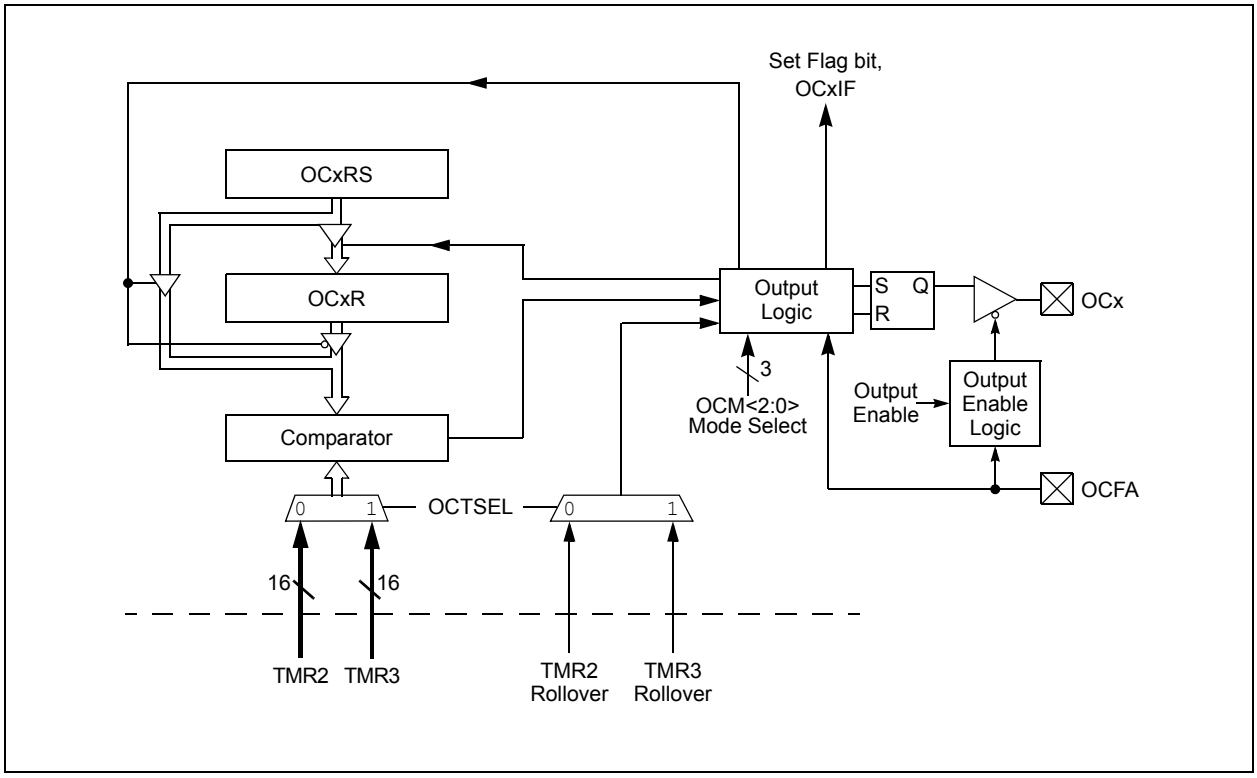

14.1 Output Compare Modes

Configure the Output Compare modes by setting the appropriate Output Compare Mode (OCM<2:0>) bits in the Output Compare x Control (OCxCON<2:0>) register. Table 14-1 lists the different bit settings for the Output Compare modes. Figure 14-2 illustrates the output compare operation for various modes. The user application must disable the associated timer when writing to the Output Compare Control registers to avoid malfunctions.

Note: See **Section 13. "Output Compare"** in the *"dsPIC33F/PIC24H Family Reference Manual"* (DS70209) for OCxR and OCxRS register restrictions.

TABLE 14-1: OUTPUT COMPARE MODES

OCM<2:0>	Mode	OCx Pin Initial State	OCx Interrupt Generation
000	Module Disabled	Controlled by GPIO register	—
001	Active-Low One-Shot	0	OCx Rising Edge
010	Active-High One-Shot	1	OCx Falling Edge
011	Toggle Mode	Current output is maintained	OCx Rising and Falling Edge
100	Delayed One-Shot	0	OCx Falling Edge
101	Continuous Pulse	0	OCx Falling Edge
110	PWM Mode without Fault Protection	0, if OCxR is zero 1, if OCxR is non-zero	No Interrupt
111	PWM Mode with Fault Protection	0, if OCxR is zero 1, if OCxR is non-zero	OCFA Falling Edge for OC1 to OC4

FIGURE 14-2: OUTPUT COMPARE OPERATION

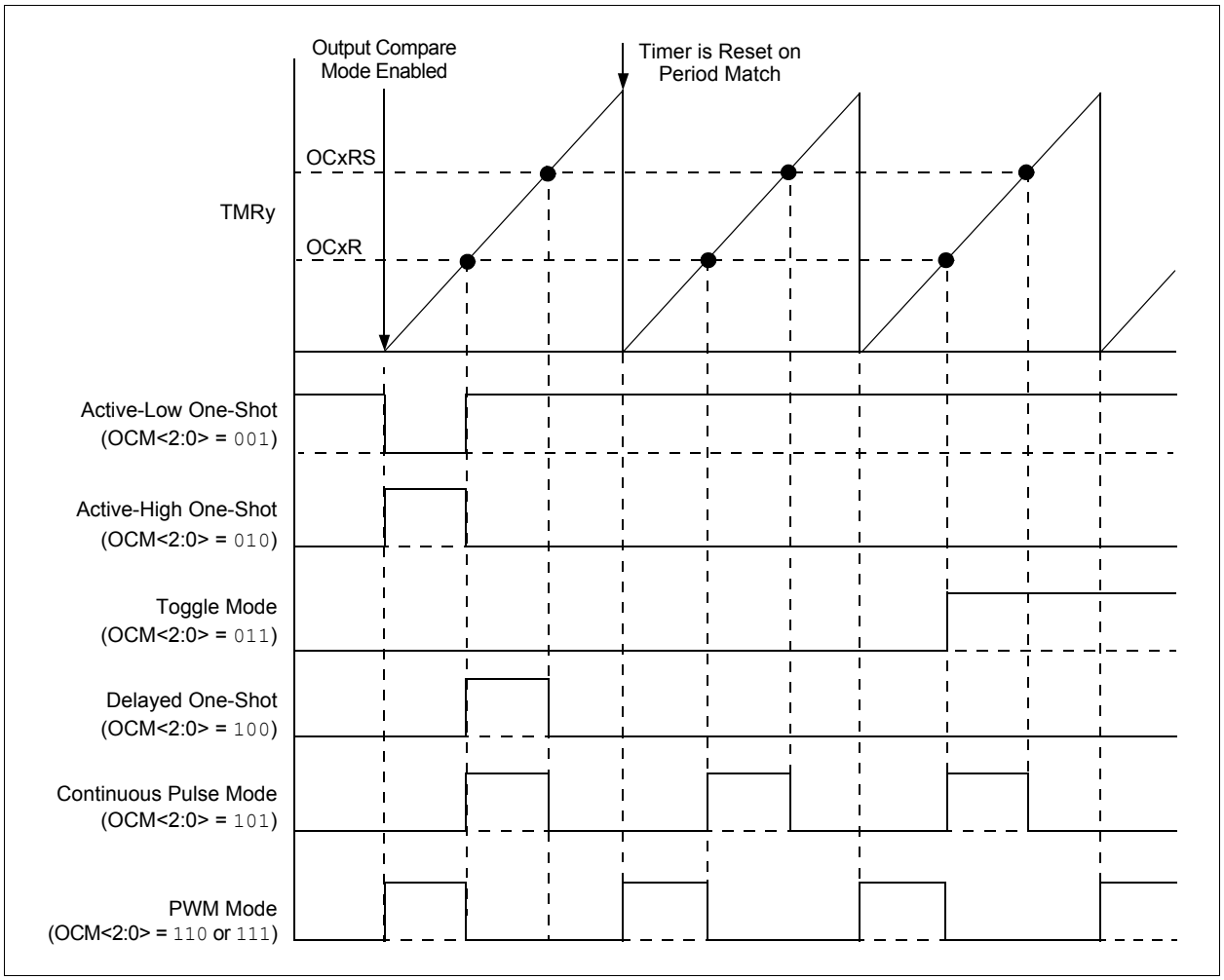

© 2011-2012 Microchip Technology Inc.

14.2 Output Compare Control Register

REGISTER 14-1: OCxCON: OUTPUT COMPARE x CONTROL REGISTER

U-0	U-0	R/W-0	U-0	U-0	U-0	U-0	U-0
—	—	OCSIDL	—	—	—	—	—
bit 15							bit 8

U-0	U-0	U-0	R-0, HC	R/W-0	R/W-0	R/W-0	R/W-0
—	—	—	OCFLT	OCTSEL	OCM<2:0>		
bit 7							bit 0

Legend:	HC = Hardware Clearable bit		
R = Readable bit	W = Writable bit	U = Unimplemented bit, read as ‘0’	
-n = Value at POR	‘1’ = Bit is set	‘0’ = Bit is cleared	x = Bit is unknown

bit 15-14 **Unimplemented:** Read as ‘0’

bit 13 **OCSIDL:** Stop Output Compare in Idle Mode Control bit
1 = Output Compare x will halt in CPU Idle mode
0 = Output Compare x will continue to operate in CPU Idle mode

bit 12-5 **Unimplemented:** Read as ‘0’

bit 4 **OCFLT:** PWM Fault Condition Status bit
1 = PWM Fault condition has occurred (cleared in hardware only)
0 = No PWM Fault condition has occurred
(This bit is only used when OCM<2:0> = 111.)

bit 3 **OCTSEL:** Output Compare Timer Selection bit
1 = Timer3 is the clock source for Output Compare x
0 = Timer2 is the clock source for Output Compare x

bit 2-0 **OCM<2:0>:** Output Compare Mode Select bits
111 = PWM mode on OCx, Fault pin is enabled
110 = PWM mode on OCx, Fault pin is disabled
101 = Initializes OCx pin low, generates continuous output pulses on OCx pin
100 = Initializes OCx pin low, generates single output pulse on OCx pin
011 = Compare event toggles OCx pin
010 = Initializes OCx pin high, compare event forces OCx pin low
001 = Initializes OCx pin low, compare event forces OCx pin high
000 = Output compare channel is disabled

NOTES:

© 2011-2012 Microchip Technology Inc.

15.0 MOTOR CONTROL PWM MODULE

Note 1: This data sheet summarizes the features of the dsPIC33FJ16(GP/MC)101/102 and dsPIC33FJ32(GP/MC)101/102/104 family devices. It is not intended to be a comprehensive reference source. To complement the information in this data sheet, refer to **Section 14. "Motor Control PWM"** (DS70187), in the "*dsPIC33F/PIC24H Family Reference Manual*", which is available on the Microchip web site (www.microchip.com).

2: Some registers and associated bits described in this section may not be available on all devices. Refer to **Section 4.0 "Memory Organization"** in this data sheet for device-specific register and bit information.

The dsPIC33FJ16MC10X devices have a 6-channel Pulse-Width Modulation (PWM) module.

The PWM module has the following features:

- Up to 16-bit resolution
- On-the-fly PWM frequency changes
- Edge-Aligned and Center-Aligned Output modes
- Single Pulse Generation mode
- Interrupt support for asymmetrical updates in Center-Aligned mode
- Output override control for Electrically Commutative Motor (ECM) operation or BLDC
- Special Event comparator for scheduling other peripheral events
- Fault pins to optionally drive each of the PWM output pins to a defined state
- Duty cycle updates configurable to be immediate or synchronized to the PWM time base

15.1 PWM1: 6-Channel PWM Module

This module simplifies the task of generating multiple synchronized PWM outputs. The following power and motion control applications are supported by the PWM module:

- 3-Phase AC Induction Motor
- Switched Reluctance (SR) Motor
- Brushless DC (BLDC) Motor
- Uninterruptible Power Supply (UPS)

This module contains three duty cycle generators, numbered 1 through 3. The module has six PWM output pins, numbered PWM1H1/PWM1L1 through PWM1H3/PWM1L3. The six I/O pins are grouped into high/low numbered pairs, denoted by the suffix H or L, respectively. For complementary loads, the low PWM pins are always the complement of the corresponding high I/O pin.

FIGURE 15-1: 6-CHANNEL PWM MODULE BLOCK DIAGRAM (PWM1)

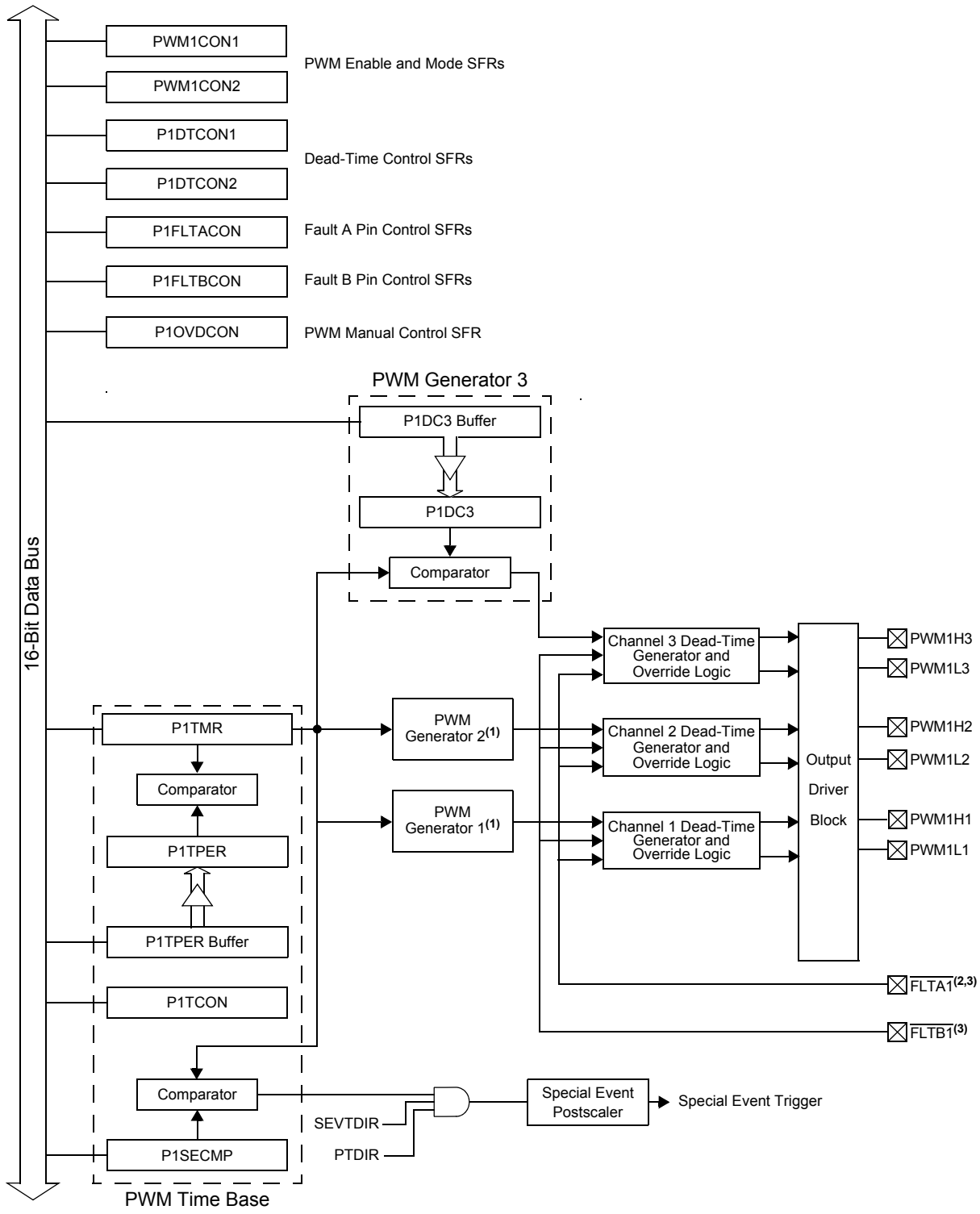

Note 1: The details of PWM Generator 1 and 2 are not shown for clarity.

2: On dsPIC33FJ16MC101 (20-pin) devices, the $\overline{\text{FLTA1}}$ pin is supported, but requires an external pull-down resistor for correct functionality.

3: On dsPIC33FJ16MC102 (28-pin) devices, the $\overline{\text{FLTA1}}$ and $\overline{\text{FLTB1}}$ pins are supported and do not require an external pull-down resistor.

© 2011-2012 Microchip Technology Inc.

15.2 PWM Faults

The Motor Control PWM module incorporates up to two Fault inputs, $\overline{\text{FLTA1}}$ and $\overline{\text{FLTB1}}$. These Fault inputs are implemented with Class B safety features. These features ensure that the PWM outputs enter a safe state when either of the Fault inputs is asserted.

The $\overline{\text{FLTA1}}$ and $\overline{\text{FLTB1}}$ pins, when enabled and having ownership of a pin, also enable a soft internal pull-down resistor. The soft pull-down provides a safety feature by automatically asserting the Fault should a break occur in the Fault signal connection.

The implementation of internal pull-down resistors is dependent on the device variant. Table 15-1 describes which devices and pins implement the internal pull-down resistors.

TABLE 15-1: INTERNAL PULL-DOWN RESISTORS ON PWM FAULT PINS

Device	Fault Pin	Internal Pull-Down Implemented?
dsPIC33FJXXMC101	$\overline{\text{FLTA1}}$	No
dsPIC33FJXXMC102	$\overline{\text{FLTA1}}$	Yes
	$\overline{\text{FLTB1}}$	Yes
dsPIC33FJ32MC104	$\overline{\text{FLTA1}}$	Yes
	$\overline{\text{FLTB1}}$	Yes

On devices without internal pull-downs on the Fault pin, it is recommended to connect an external pull-down resistor for Class B safety features.

15.2.1 PWM FAULTS AT RESET

During any Reset event, the PWM module maintains ownership of both PWM Fault pins. At Reset, both Faults are enabled in latched mode to guarantee the fail-safe power-up of the application. The application software must clear both of the PWM Faults before enabling the Motor Control PWM module.

The Fault condition must be cleared by the external circuitry driving the Fault input pin high and clearing the Fault interrupt flag. After the Fault pin condition has been cleared, the PWM module restores the PWM output signals on the next PWM period or half-period boundary.

Refer to **Section 14. "Motor Control PWM"** (DS70187), in the "*dsPIC33F/PIC24H Family Reference Manual*" for more information on the PWM Faults.

> **Note:** The number of PWM Faults mapped to the device pins depend on the specific variant. Regardless of the variant, both Faults will be enabled during any Reset event. The application must clear both $\overline{\text{FLTA1}}$ and $\overline{\text{FLTB1}}$ before enabling the Motor Control PWM module. Refer to the specific device pin diagrams to see which Fault pins are mapped to the device pins.

15.3 Write-Protected Registers

On dsPIC33FJ(16/32)MC10X devices, write protection is implemented for the PWMxCON1, PxFLTACON and PxFLTBCON registers. The write protection feature prevents any inadvertent writes to these registers. The write protection feature can be controlled by the PWMLOCK Configuration bit in the FOSCSEL Configuration register. The default state of the write protection feature is enabled (PWMLOCK = `1`). The write protection feature can be disabled by configuring PWMLOCK (FOSCSEL<6>) = `0`.

The user application can gain access to these locked registers either by configuring the PWMLOCK bit (FOSCSEL<6>) = `0` or by performing the unlock sequence. To perform the unlock sequence, the user application must write two consecutive values (0xABCD and 0x4321) to the PWMxKEY register to perform the unlock operation. The write access to the PWMxCON1, PxFLTACON or PxFLTBCON registers must be the next SFR access following the unlock process. There can be no other SFR accesses during the unlock process and subsequent write access.

To write to all registers, the PWMxCON1, PxFLTACON and PxFLTBCON registers require three unlock operations.

The correct unlocking sequence is described in Example 15-1 and Example 15-2.

EXAMPLE 15-1: ASSEMBLY CODE FOR WRITE-PROTECTED REGISTER UNLOCK AND FAULT CLEARING SEQUENCE

```
; FLTA1 pin must be pulled high externally in order to clear and disable the Fault
; Writing to P1FLTBCON register requires unlock sequence

mov #0xabcd,w10        ; Load first unlock key to w10 register
mov #0x4321,w11        ; Load second unlock key to w11 register
mov #0x0000,w0         ; Load desired value of P1FLTACON register in w0
mov w10, PWM1KEY       ; Write first unlock key to PWM1KEY register
mov w11, PWM1KEY       ; Write second unlock key to PWM1KEY register
mov w0,P1FLTACON       ; Write desired value to P1FLTACON register

; FLTB1 pin must be pulled high externally in order to clear and disable the Fault
; Writing to P1FLTBCON register requires unlock sequence

mov #0xabcd,w10        ; Load first unlock key to w10 register
mov #0x4321,w11        ; Load second unlock key to w11 register
mov #0x0000,w0         ; Load desired value of P1FLTBCON register in w0
mov w10, PWM1KEY       ; Write first unlock key to PWM1KEY register
mov w11, PWM1KEY       ; Write second unlock key to PWM1KEY register
mov w0,P1FLTBCON       ; Write desired value to P1FLTBCON register

; Enable all PWMs using PWM1CON1 register
; Writing to PWM1CON1 register requires unlock sequence

mov #0xabcd,w10        ; Load first unlock key to w10 register
mov #0x4321,w11        ; Load second unlock key to w11 register
mov #0x0077,w0         ; Load desired value of PWM1CON1 register in w0
mov w10, PWM1KEY       ; Write first unlock key to PWM1KEY register
mov w11, PWM1KEY       ; Write second unlock key to PWM1KEY register
mov w0,PWM1CON1        ; Write desired value to PWM1CON1 register
```

EXAMPLE 15-2: C CODE FOR WRITE-PROTECTED REGISTER UNLOCK AND FAULT CLEARING SEQUENCE

```
// FLTA1 pin must be pulled high externally in order to clear and disable the Fault
// Writing to P1FLTACON register requires unlock sequence
// Use builtin function to write 0x0000 to P1FLTACON register
__builtin_write_PWMSFR(&P1FLTACON, 0x0000, &PWM1KEY);

// FLTB1 pin must be pulled high externally in order to clear and disable the Fault
// Writing to P1FLTBCON register requires unlock sequence
// Use builtin function to write 0x0000 to P1FLTBCON register
__builtin_write_PWMSFR(&P1FLTBCON, 0x0000, &PWM1KEY);

// Enable all PWMs using PWM1CON1 register
// Writing to PWM1CON1 register requires unlock sequence
// Use builtin function to write 0x0077 to PWM1CON1 register
__builtin_write_PWMSFR(&PWM1CON1, 0x0077, &PWM1KEY);
```


© 2011-2012 Microchip Technology Inc.

15.4 PWM Control Registers

REGISTER 15-1: PxTCON: PWMx TIME BASE CONTROL REGISTER

R/W-0	U-0	R/W-0	U-0	U-0	U-0	U-0	U-0
PTEN	—	PTSIDL	—	—	—	—	—
bit 15							bit 8

R/W-0	R/W-0	R/W-0	R/W-0	R/W-0	R/W-0	R/W-0	R/W-0
PTOPS<3:0>				PTCKPS<1:0>		PTMOD<1:0>	
bit 7							bit 0

Legend:			
R = Readable bit	W = Writable bit	U = Unimplemented bit, read as ‘0’	
-n = Value at POR	‘1’ = Bit is set	‘0’ = Bit is cleared	x = Bit is unknown

bit 15 **PTEN:** PWM Time Base Timer Enable bit
`1` = PWM time base is on
`0` = PWM time base is off

bit 14 **Unimplemented:** Read as ‘`0`’

bit 13 **PTSIDL:** PWM Time Base Stop in Idle Mode bit
`1` = PWM time base halts in CPU Idle mode
`0` = PWM time base runs in CPU Idle mode

bit 12-8 **Unimplemented:** Read as ‘`0`’

bit 7-4 **PTOPS<3:0>:** PWM Time Base Output Postscale Select bits
`1111` = 1:16 postscale
•
•
•
`0001` = 1:2 postscale
`0000` = 1:1 postscale

bit 3-2 **PTCKPS<1:0>:** PWM Time Base Input Clock Prescale Select bits
`11` = PWM time base input clock period is 64 TCY (1:64 prescale)
`10` = PWM time base input clock period is 16 TCY (1:16 prescale)
`01` = PWM time base input clock period is 4 TCY (1:4 prescale)
`00` = PWM time base input clock period is TCY (1:1 prescale)

bit 1-0 **PTMOD<1:0>:** PWM Time Base Mode Select bits
`11` = PWM time base operates in a Continuous Up/Down Count mode with interrupts for double PWM updates
`10` = PWM time base operates in a Continuous Up/Down Count mode
`01` = PWM time base operates in Single Pulse mode
`00` = PWM time base operates in a Free-Running mode

REGISTER 15-2: PxTMR: PWMx TIMER COUNT VALUE REGISTER

R-0	R/W-0	R/W-0	R/W-0	R/W-0	R/W-0	R/W-0	R/W-0
PTDIR	PTMR<14:8>						
bit 15							bit 8

R/W-0	R/W-0	R/W-0	R/W-0	R/W-0	R/W-0	R/W-0	R/W-0
PTMR<7:0>							
bit 7							bit 0

Legend:			
R = Readable bit	W = Writable bit	U = Unimplemented bit, read as ‘0’	
-n = Value at POR	‘1’ = Bit is set	‘0’ = Bit is cleared	x = Bit is unknown

bit 15 **PTDIR:** PWM Time Base Count Direction Status bit (read-only)
1 = PWM time base is counting down
0 = PWM time base is counting up

bit 14-0 **PTMR <14:0>:** PWM Time Base Register Count Value bits

REGISTER 15-3: PxTPER: PWMx TIME BASE PERIOD REGISTER

U-0	R/W-0	R/W-0	R/W-0	R/W-0	R/W-0	R/W-0	R/W-0
—	PTPER<14:8>						
bit 15							bit 8

R/W-0	R/W-0	R/W-0	R/W-0	R/W-0	R/W-0	R/W-0	R/W-0
PTPER<7:0>							
bit 7							bit 0

Legend:			
R = Readable bit	W = Writable bit	U = Unimplemented bit, read as ‘0’	
-n = Value at POR	‘1’ = Bit is set	‘0’ = Bit is cleared	x = Bit is unknown

bit 15 **Unimplemented:** Read as ‘0’

bit 14-0 **PTPER<14:0>:** PWM Time Base Period Value bits

© 2011-2012 Microchip Technology Inc.

REGISTER 15-4: PxSECMP: PWMx SPECIAL EVENT COMPARE REGISTER

R/W-0	R/W-0	R/W-0	R/W-0	R/W-0	R/W-0	R/W-0	R/W-0
SEVTDIR(1)	SEVTCMP<14:8>(2)						
bit 15							bit 8

R/W-0	R/W-0	R/W-0	R/W-0	R/W-0	R/W-0	R/W-0	R/W-0
SEVTCMP<7:0>(2)							
bit 7							bit 0

Legend:			
R = Readable bit	W = Writable bit	U = Unimplemented bit, read as ‘0’	
-n = Value at POR	‘1’ = Bit is set	‘0’ = Bit is cleared	x = Bit is unknown

bit 15 **SEVTDIR:** Special Event Trigger Time Base Direction bit(1)
1 = A Special Event Trigger will occur when the PWM time base is counting down
0 = A Special Event Trigger will occur when the PWM time base is counting up

bit 14-0 **SEVTCMP<14:0>:** Special Event Compare Value bits(2)

Note 1: SEVTDIR is compared with PTDIR (PxTMR<15>) to generate the Special Event Trigger.
2: PxSECMP<14:0> is compared with PxTMR<14:0> to generate the Special Event Trigger.

REGISTER 15-5: PWMxCON1: PWMx CONTROL REGISTER 1[1]

U-0	U-0	U-0	U-0	U-0	R/W-0	R/W-0	R/W-0
—	—	—	—	—	PMOD3	PMOD2	PMOD1
bit 15							bit 8

U-0	R/W-0	R/W-0	R/W-0	U-0	R/W-0	R/W-0	R/W-0
—	PEN3H[2]	PEN2H[2]	PEN1H[2]	—	PEN3L[2]	PEN2L[2]	PEN1L[2]
bit 7							bit 0

Legend:			
R = Readable bit	W = Writable bit	U = Unimplemented bit, read as ‘0’	
-n = Value at POR	‘1’ = Bit is set	‘0’ = Bit is cleared	x = Bit is unknown

bit 15-11 **Unimplemented:** Read as ‘0’

bit 10-8 **PMOD<3:1>:** PWM I/O Pair Mode bits
1 = PWM I/O pin pair is in the Independent PWM Output mode
0 = PWM I/O pin pair is in the Complementary Output mode

bit 7 **Unimplemented:** Read as ‘0’

bit 6-4 **PEN3H:PEN1H:** PWMxH I/O Enable bits[2]
1 = PWMxH pin is enabled for PWM output
0 = PWMxH pin is disabled, I/O pin becomes a general purpose I/O

bit 3 **Unimplemented:** Read as ‘0’

bit 2-0 **PEN3L:PEN1L:** PWMxL I/O Enable bits[2]
1 = PWMxL pin is enabled for PWM output
0 = PWMxL pin is disabled, I/O pin becomes a general purpose I/O

Note 1: The PWMxCON1 register is a write-protected register. Refer to **Section 15.3 “Write-Protected Registers”** for more information on the unlock sequence.

2: The Reset status for this bit depends on the setting of the PWMPIN Configuration bit (FPOR<7>):
- If PWMPIN = 1 (default), the PWM pins are controlled by the PORT register at Reset, meaning they are initially programmed as inputs (i.e., tri-stated).
- If PWMPIN = 0, the PWM pins are controlled by the PWM module at Reset and are therefore, initially programmed as output pins.

© 2011-2012 Microchip Technology Inc.

REGISTER 15-6: PWMxCON2: PWMx CONTROL REGISTER 2

U-0	U-0	U-0	U-0	R/W-0	R/W-0	R/W-0	R/W-0
—	—	—	—	SEVOPS<3:0>			
bit 15							bit 8

U-0	U-0	U-0	U-0	U-0	R/W-0	R/W-0	R/W-0
—	—	—	—	—	IUE	OSYNC	UDIS
bit 7							bit 0

Legend:			
R = Readable bit	W = Writable bit	U = Unimplemented bit, read as ‘0’	
-n = Value at POR	‘1’ = Bit is set	‘0’ = Bit is cleared	x = Bit is unknown

bit 15-12 **Unimplemented:** Read as ‘0’

bit 11-8 **SEVOPS<3:0>:** PWM Special Event Trigger Output Postscale Select bits
1111 = 1:16 postscale
•
•
•
0001 = 1:2 postscale
0000 = 1:1 postscale

bit 7-3 **Unimplemented:** Read as ‘0’

bit 2 **IUE:** Immediate Update Enable bit
1 = Updates to the active PxDC registers are immediate
0 = Updates to the active PxDC registers are synchronized to the PWM time base

bit 1 **OSYNC:** Output Override Synchronization bit
1 = Output overrides via the PxOVDCON register are synchronized to the PWM time base
0 = Output overrides via the PxOVDCON register occur on the next TCY boundary

bit 0 **UDIS:** PWM Update Disable bit
1 = Updates from Duty Cycle and Period Buffer registers are disabled
0 = Updates from Duty Cycle and Period Buffer registers are enabled

REGISTER 15-7: PxDTCON1: PWMx DEAD-TIME CONTROL REGISTER 1

R/W-0	R/W-0	R/W-0	R/W-0	R/W-0	R/W-0	R/W-0	R/W-0
DTBPS<1:0>		DTB<5:0>					
bit 15							bit 8

R/W-0	R/W-0	R/W-0	R/W-0	R/W-0	R/W-0	R/W-0	R/W-0
DTAPS<1:0>		DTA<5:0>					
bit 7							bit 0

Legend:			
R = Readable bit	W = Writable bit	U = Unimplemented bit, read as ‘0’	
-n = Value at POR	‘1’ = Bit is set	‘0’ = Bit is cleared	x = Bit is unknown

bit 15-14 **DTBPS<1:0>:** Dead-Time Unit B Prescale Select bits
`11` = Clock period for Dead-Time Unit B is 8 TCY
`10` = Clock period for Dead-Time Unit B is 4 TCY
`01` = Clock period for Dead-Time Unit B is 2 TCY
`00` = Clock period for Dead-Time Unit B is TCY

bit 13-8 **DTB<5:0>:** Unsigned 6-Bit Dead-Time Value for Dead-Time Unit B bits

bit 7-6 **DTAPS<1:0>:** Dead-Time Unit A Prescale Select bits
`11` = Clock period for Dead-Time Unit A is 8 TCY
`10` = Clock period for Dead-Time Unit A is 4 TCY
`01` = Clock period for Dead-Time Unit A is 2 TCY
`00` = Clock period for Dead-Time Unit A is TCY

bit 5-0 **DTA<5:0>:** Unsigned 6-Bit Dead-Time Value for Dead-Time Unit A bits

© 2011-2012 Microchip Technology Inc.

REGISTER 15-8: PxDTCON2: PWMx DEAD-TIME CONTROL REGISTER 2

U-0	U-0	U-0	U-0	U-0	U-0	U-0	U-0
—	—	—	—	—	—	—	—
bit 15							bit 8

U-0	U-0	R/W-0	R/W-0	R/W-0	R/W-0	R/W-0	R/W-0
—	—	DTS3A	DTS3I	DTS2A	DTS2I	DTS1A	DTS1I
bit 7							bit 0

Legend:			
R = Readable bit	W = Writable bit	U = Unimplemented bit, read as ‘0’	
-n = Value at POR	‘1’ = Bit is set	‘0’ = Bit is cleared	x = Bit is unknown

bit 15-6 **Unimplemented:** Read as ‘0’

bit 5 **DTS3A:** Dead-Time Select for PWM3 Signal Going Active bit
1 = Dead time provided from Unit B
0 = Dead time provided from Unit A

bit 4 **DTS3I:** Dead-Time Select for PWM3 Signal Going Inactive bit
1 = Dead time provided from Unit B
0 = Dead time provided from Unit A

bit 3 **DTS2A:** Dead-Time Select for PWM2 Signal Going Active bit
1 = Dead time provided from Unit B
0 = Dead time provided from Unit A

bit 2 **DTS2I:** Dead-Time Select for PWM2 Signal Going Inactive bit
1 = Dead time provided from Unit B
0 = Dead time provided from Unit A

bit 1 **DTS1A:** Dead-Time Select for PWM1 Signal Going Active bit
1 = Dead time provided from Unit B
0 = Dead time provided from Unit A

bit 0 **DTS1I:** Dead-Time Select for PWM1 Signal Going Inactive bit
1 = Dead time provided from Unit B
0 = Dead time provided from Unit A

REGISTER 15-9: PxFLTACON: PWMx FAULT A CONTROL REGISTER(1,2,3,4)

U-0	U-0	R/W-0	R/W-0	R/W-0	R/W-0	R/W-0	R/W-0
—	—	FAOV3H	FAOV3L	FAOV2H	FAOV2L	FAOV1H	FAOV1L
bit 15							bit 8

R/W-0	U-0	U-0	U-0	U-0	R/W-1	R/W-1	R/W-1
FLTAM	—	—	—	—	FAEN3	FAEN2	FAEN1
bit 7							bit 0

Legend:			
R = Readable bit	W = Writable bit	U = Unimplemented bit, read as ‘0’	
-n = Value at POR	‘1’ = Bit is set	‘0’ = Bit is cleared	x = Bit is unknown

bit 15-14 **Unimplemented:** Read as ‘0’

bit 13-8 **FAOVxH<3:1>:FAOVxL<3:1>:** Fault Input A PWM Override Value bits
1 = The PWM output pin is driven active on an external Fault input event
0 = The PWM output pin is driven inactive on an external Fault input event

bit 7 **FLTAM:** Fault A Mode bit
1 = The Fault A input pin functions in the Cycle-by-Cycle mode
0 = The Fault A input pin latches all control pins to the programmed states in PxFLTACON<13:8>

bit 6-3 **Unimplemented:** Read as ‘0’

bit 2 **FAEN3:** Fault Input A Enable bit
1 = PWMxH3/PWMxL3 pin pair is controlled by Fault Input A
0 = PWMxH3/PWMxL3 pin pair is not controlled by Fault Input A

bit 1 **FAEN2:** Fault Input A Enable bit
1 = PWMxH2/PWMxL2 pin pair is controlled by Fault Input A
0 = PWMxH2/PWMxL2 pin pair is not controlled by Fault Input A

bit 0 **FAEN1:** Fault Input A Enable bit
1 = PWMxH1/PWMxL1 pin pair is controlled by Fault Input A
0 = PWMxH1/PWMxL1 pin pair is not controlled by Fault Input A

Note 1: Comparator outputs are not internally connected to the PWM Fault control logic. If using the comparator modules for Fault generation, the user must externally connect the desired comparator output pin to the dedicated $\overline{\text{FLTA1}}$ or $\overline{\text{FLTB1}}$ input pin.

2: Refer to Table 15-1 for $\overline{\text{FLTA1}}$ implementation details.

3: The PxFLTACON register is a write-protected register. Refer to **Section 15.3 “Write-Protected Registers”** for more information on the unlock sequence.

4: During any Reset event, $\overline{\text{FLTA1}}$ is enabled by default and must be cleared as described in **Section 15.2 “PWM Faults”**.

© 2011-2012 Microchip Technology Inc.

REGISTER 15-10: PxFLTBCON: PWMx FAULT B CONTROL REGISTER(1,2,3,4)

U-0	U-0	R/W-0	R/W-0	R/W-0	R/W-0	R/W-0	R/W-0
—	—	FBOV3H	FBOV3L	FBOV2H	FBOV2L	FBOV1H	FBOV1L
bit 15							bit 8

R/W-0	U-0	U-0	U-0	U-0	R/W-1	R/W-1	R/W-1
FLTBM	—	—	—	—	FBEN3	FBEN2	FBEN1
bit 7							bit 0

Legend:			
R = Readable bit	W = Writable bit	U = Unimplemented bit, read as ‘0’	
-n = Value at POR	‘1’ = Bit is set	‘0’ = Bit is cleared	x = Bit is unknown

bit 15-14 **Unimplemented:** Read as ‘0’

bit 13-8 **FBOVxH<3:1>:FBOVxL<3:1>:** Fault Input B PWM Override Value bits
1 = The PWM output pin is driven active on an external Fault input event
0 = The PWM output pin is driven inactive on an external Fault input event

bit 7 **FLTBM:** Fault B Mode bit
1 = The Fault B input pin functions in the Cycle-by-Cycle mode
0 = The Fault B input pin latches all control pins to the programmed states in PxFLTBCON<13:8>

bit 6-3 **Unimplemented:** Read as ‘0’

bit 2 **FBEN3:** Fault Input B Enable bit
1 = PWMxH3/PWMxL3 pin pair is controlled by Fault Input B
0 = PWMxH3/PWMxL3 pin pair is not controlled by Fault Input B

bit 1 **FBEN2:** Fault Input B Enable bit
1 = PWMxH2/PWMxL2 pin pair is controlled by Fault Input B
0 = PWMxH2/PWMxL2 pin pair is not controlled by Fault Input B

bit 0 **FBEN1:** Fault Input B Enable bit
1 = PWMxH1/PWMxL1 pin pair is controlled by Fault Input B
0 = PWMxH1/PWMxL1 pin pair is not controlled by Fault Input B

Note 1: Comparator outputs are not internally connected to the PWM Fault control logic. If using the Comparator modules for Fault generation, the user must externally connect the desired comparator output pin to the dedicated $\overline{\text{FLTA1}}$ or $\overline{\text{FLTB1}}$ input pin.

2: Refer to Table 15-1 for $\overline{\text{FLTB1}}$ implementation details.

3: The PxFLTACON register is a write-protected register. Refer to **Section 15.3 “Write-Protected Registers”** for more information on the unlock sequence.

4: During any Reset event, $\overline{\text{FLTB1}}$ is enabled by default and must be cleared as described in **Section 15.2 “PWM Faults”**.

REGISTER 15-11: PxOVDCON: PWMx OVERRIDE CONTROL REGISTER

U-0	U-0	R/W-1	R/W-1	R/W-1	R/W-1	R/W-1	R/W-1
—	—	POVD3H	POVD3L	POVD2H	POVD2L	POVD1H	POVD1L
bit 15							bit 8

U-0	U-0	R/W-0	R/W-0	R/W-0	R/W-0	R/W-0	R/W-0
—	—	POUT3H	POUT3L	POUT2H	POUT2L	POUT1H	POUT1L
bit 7							bit 0

Legend:			
R = Readable bit	W = Writable bit	U = Unimplemented bit, read as ‘0’	
-n = Value at POR	‘1’ = Bit is set	‘0’ = Bit is cleared	x = Bit is unknown

bit 15-14 **Unimplemented:** Read as ‘0’

bit 13-8 **POVDxH<3:1>:POVDxL<3:1>:** PWM Output Override bits
1 = Output on PWMx I/O pin is controlled by the PWM generator
0 = Output on PWMx I/O pin is controlled by the value in the corresponding POUTxH:POUTxL bits

bit 7-6 **Unimplemented:** Read as ‘0’

bit 5-0 **POUTxH<3:1>:POUTxL<3:1>:** PWM Manual Output bits
1 = PWMx I/O pin is driven active when the corresponding POVDxH:POVDxL bits are cleared
0 = PWMx I/O pin is driven inactive when the corresponding POVDxH:POVDxL bits are cleared

© 2011-2012 Microchip Technology Inc.

REGISTER 15-12: PxDC1: PWMx DUTY CYCLE REGISTER 1

R/W-0	R/W-0	R/W-0	R/W-0	R/W-0	R/W-0	R/W-0	R/W-0
PDC1<15:8>							
bit 15							bit 8

R/W-0	R/W-0	R/W-0	R/W-0	R/W-0	R/W-0	R/W-0	R/W-0
PDC1<7:0>							
bit 7							bit 0

Legend:			
R = Readable bit	W = Writable bit	U = Unimplemented bit, read as ‘0’	
-n = Value at POR	‘1’ = Bit is set	‘0’ = Bit is cleared	x = Bit is unknown

bit 15-0 **PDC1<15:0>:** PWM Duty Cycle 1 Value bits

REGISTER 15-13: PxDC2: PWMx DUTY CYCLE REGISTER 2

R/W-0	R/W-0	R/W-0	R/W-0	R/W-0	R/W-0	R/W-0	R/W-0
PDC2<15:8>							
bit 15							bit 8

R/W-0	R/W-0	R/W-0	R/W-0	R/W-0	R/W-0	R/W-0	R/W-0
PDC2<7:0>							
bit 7							bit 0

Legend:			
R = Readable bit	W = Writable bit	U = Unimplemented bit, read as ‘0’	
-n = Value at POR	‘1’ = Bit is set	‘0’ = Bit is cleared	x = Bit is unknown

bit 15-0 **PDC2<15:0>:** PWM Duty Cycle 2 Value bits

REGISTER 15-14: PxDC3: PWMx DUTY CYCLE REGISTER 3

R/W-0	R/W-0	R/W-0	R/W-0	R/W-0	R/W-0	R/W-0	R/W-0
PDC3<15:8>							
bit 15							bit 8

R/W-0	R/W-0	R/W-0	R/W-0	R/W-0	R/W-0	R/W-0	R/W-0
PDC3<7:0>							
bit 7							bit 0

Legend:			
R = Readable bit	W = Writable bit	U = Unimplemented bit, read as ‘0’	
-n = Value at POR	‘1’ = Bit is set	‘0’ = Bit is cleared	x = Bit is unknown

bit 15-0 **PDC3<15:0>:** PWM Duty Cycle 3 Value bits

REGISTER 15-15: PWMxKEY: PWMx UNLOCK REGISTER

R/W-0	R/W-0	R/W-0	R/W-0	R/W-0	R/W-0	R/W-0	R/W-0
PWMKEY<15:8>							
bit 15							bit 8

R/W-0	R/W-0	R/W-0	R/W-0	R/W-0	R/W-0	R/W-0	R/W-0
PWMKEY<7:0>							
bit 7							bit 0

Legend:			
R = Readable bit	W = Writable bit	U = Unimplemented, read as ‘0’	
-n = Value at POR	‘1’ = Bit is set	‘0’ = Bit is cleared	x = Bit is unknown

bit 15-0 **PWMKEY<15:0>:** PWMx Unlock bits

If the PWMLOCK Configuration bit is asserted (PWMLOCK = `1`), the PWMxCON1, PxFLTACON and PxFLTBCON registers are writable only after the proper sequence is written to the PWMxKEY register. If the PWMLOCK Configuration bit is deasserted (PWMLOCK = `0`), the PWMxCON1, PxFLTACON and PxFLTBCON registers are writable at all times. Refer to **Section 14. “Motor Control PWM”** (DS70187) in the “*dsPIC33F/PIC24H Family Reference Manual*” for details on the unlock sequence.

© 2011-2012 Microchip Technology Inc.

16.0 SERIAL PERIPHERAL INTERFACE (SPI)

Note 1: This data sheet summarizes the features of the dsPIC33FJ16(GP/MC)101/102 and dsPIC33FJ32(GP/MC)101/102/104 family devices. It is not intended to be a comprehensive reference source. To complement the information in this data sheet, refer to **Section 18. "Serial Peripheral Interface (SPI)"** (DS70206) in the *"dsPIC33F/PIC24H Family Reference Manual"*, which is available from the Microchip web site (www.microchip.com).

2: Some registers and associated bits described in this section may not be available on all devices. Refer to **Section 4.0 "Memory Organization"** in this data sheet for device-specific register and bit information.

The Serial Peripheral Interface (SPI) module is a synchronous serial interface useful for communicating with other peripheral or microcontroller devices. These peripheral devices can be serial EEPROMs, shift registers, display drivers, Analog-to-Digital Converters, etc. The SPI module is compatible with SPI and SIOP from Motorola®.

Each SPI module consists of a 16-bit shift register, SPIxSR (where x = 1 or 2), used for shifting data in and out, and a buffer register, SPIxBUF. A control register, SPIxCON, configures the module. Additionally, a status register, SPIxSTAT, indicates status conditions.

The serial interface consists of four pins:

- SDIx (serial data input)
- SDOx (serial data output)
- SCKx (shift clock input or output)
- $\overline{\text{SSx}}$ (active-low slave select).

In Master mode operation, SCKx is a clock output. In Slave mode, it is a clock input.

FIGURE 16-1: SPIx MODULE BLOCK DIAGRAM

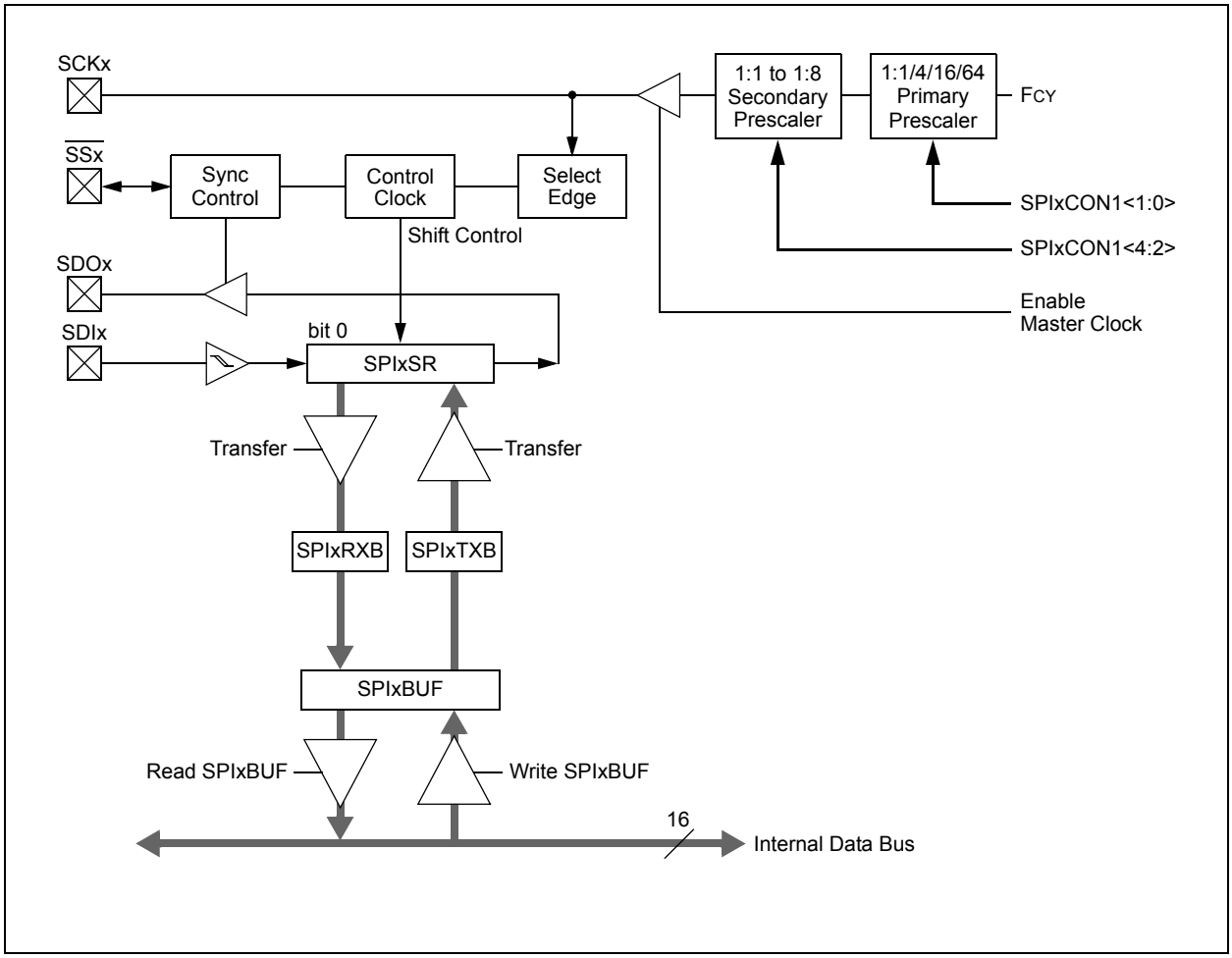

16.1 SPI Helpful Tips

1. In Frame mode, if there is a possibility that the master may not be initialized before the slave:
   a) If FRMPOL (SPIxCON2<13>) = 1, use a pull-down resistor on $\overline{SSx}$.
   b) If FRMPOL = 0, use a pull-up resistor on $\overline{SSx}$.

Note:	This insures that the first frame transmission after initialization is not shifted or corrupted.

2. In Non-Framed 3-Wire mode, (i.e., not using $\overline{SSx}$ from a master):
   a) If CKP (SPIxCON1<6>) = 1, always place a pull-up resistor on $\overline{SSx}$.
   b) If CKP = 0, always place a pull-down resistor on $\overline{SSx}$.

Note:	This will insure that during power-up and initialization, the master/slave will not lose sync due to an errant SCK transition that would cause the slave to accumulate data shift errors for both transmit and receive, appearing as corrupted data.

3. FRMEN (SPIxCON2<15>) = 1 and SSEN (SPIxCON1<7>) = 1 are exclusive and invalid. In Frame mode, SCKx is continuous and the Frame Sync pulse is active on the $\overline{SSx}$ pin, which indicates the start of a data frame.

Note:	Not all third-party devices support Frame mode timing. Refer to the SPI electrical characteristics for details.

4. In Master mode only, set the SMP bit (SPIxCON1<9>) to a '1' for the fastest SPI data rate possible. The SMP bit can only be set at the same time or after the MSTEN bit (SPIxCON1<5>) is set.
5. To avoid invalid slave read data to the master, the user's master software must ensure enough time for slave software to fill its write buffer before the user application initiates a master write/read cycle. It is always advisable to pre-load the SPIxBUF Transmit register in advance of the next master transaction cycle. SPIxBUF is transferred to the SPIx Shift register and is empty once the data transmission begins.
6. The SPI related pins (SDI1, SDO1, SCK1) are located at fixed positions in the dsPIC33FJ16(GP/MC)10X devices. The same pins are remappable in the dsPIC33FJ32(GP/MC)10X devices.

16.2 SPI Resources

Many useful resources are provided on the main product page of the Microchip web site for the devices listed in this data sheet. This product page, which can be accessed using this link, contains the latest updates and additional information.

Note:	In the event you are not able to access the product page using the link above, enter this URL in your browser: http://www.microchip.com/wwwproducts/Devices.aspx?dDocName=en554109

16.2.1 KEY RESOURCES

- **Section 18. "Serial Peripheral Interface (SPI)"** (DS70206) in the "*dsPIC33F/PIC24H Family Reference Manual*".
- Code Samples
- Application Notes
- Software Libraries
- Webinars
- All related "*dsPIC33F/PIC24H Family Reference Manual*" sections
- Development Tools

© 2011-2012 Microchip Technology Inc.

16.3 SPI Control Registers

REGISTER 16-1: SPIxSTAT: SPIx STATUS AND CONTROL REGISTER

R/W-0	U-0	R/W-0	U-0	U-0	U-0	U-0	U-0
SPIEN	—	SPISIDL	—	—	—	—	—
bit 15							bit 8

U-0	R/C-0	U-0	U-0	U-0	U-0	R-0	R-0
—	SPIROV	—	—	—	—	SPITBF	SPIRBF
bit 7							bit 0

Legend:	C = Clearable bit		
R = Readable bit	W = Writable bit	U = Unimplemented bit, read as ‘0’	
-n = Value at POR	‘1’ = Bit is set	‘0’ = Bit is cleared	x = Bit is unknown

bit 15 **SPIEN:** SPIx Enable bit
1 = Enables module and configures SCKx, SDOx, SDIx and $\overline{SSx}$ as serial port pins
0 = Disables module

bit 14 **Unimplemented:** Read as ‘0’

bit 13 **SPISIDL:** SPIx Stop in Idle Mode bit
1 = Discontinues module operation when device enters Idle mode
0 = Continues module operation in Idle mode

bit 12-7 **Unimplemented:** Read as ‘0’

bit 6 **SPIROV:** SPIx Receive Overflow Flag bit
1 = A new byte/word is completely received and discarded; the user software has not read the previous data in the SPIxBUF register
0 = No overflow has occurred.

bit 5-2 **Unimplemented:** Read as ‘0’

bit 1 **SPITBF:** SPIx Transmit Buffer Full Status bit
1 = Transmit has not yet started, SPIxTXB is full
0 = Transmit has started, SPIxTXB is empty
Automatically set in hardware when the CPU writes the SPIxBUF location, loading SPIxTXB. Automatically cleared in hardware when the SPIx module transfers data from SPIxTXB to SPIxSR.

bit 0 **SPIRBF:** SPIx Receive Buffer Full Status bit
1 = Receive complete, SPIxRXB is full
0 = Receive is not complete, SPIxRXB is empty
Automatically set in hardware when SPIx transfers data from SPIxSR to SPIxRXB. Automatically cleared in hardware when the core reads the SPIxBUF location, reading SPIxRXB.

REGISTER 16-2: SPIxCON1: SPIx CONTROL REGISTER 1

U-0	U-0	U-0	R/W-0	R/W-0	R/W-0	R/W-0	R/W-0
—	—	—	DISSCK	DISSDO	MODE16	SMP	CKE(1)
bit 15							bit 8

R/W-0	R/W-0	R/W-0	R/W-0	R/W-0	R/W-0	R/W-0	R/W-0
SSEN(2)	CKP	MSTEN	SPRE<2:0>(3)			PPRE<1:0>(3)	
bit 7							bit 0

Legend:			
R = Readable bit	W = Writable bit	U = Unimplemented bit, read as ‘0’	
-n = Value at POR	‘1’ = Bit is set	‘0’ = Bit is cleared	x = Bit is unknown

bit 15-13 **Unimplemented:** Read as ‘0’

bit 12 **DISSCK:** Disable SCKx pin bit (SPI Master modes only)
1 = Internal SPI clock is disabled, pin functions as I/O
0 = Internal SPI clock is enabled

bit 11 **DISSDO:** Disable SDOx pin bit
1 = SDOx pin is not used by module; pin functions as I/O
0 = SDOx pin is controlled by the module

bit 10 **MODE16:** Word/Byte Communication Select bit
1 = Communication is word-wide (16 bits)
0 = Communication is byte-wide (8 bits)

bit 9 **SMP:** SPIx Data Input Sample Phase bit
Master mode:
1 = Input data sampled at end of data output time
0 = Input data sampled at middle of data output time
Slave mode:
SMP must be cleared when SPIx is used in Slave mode.

bit 8 **CKE:** Clock Edge Select bit(1)
1 = Serial output data changes on transition from active clock state to Idle clock state (see bit 6)
0 = Serial output data changes on transition from Idle clock state to active clock state (see bit 6)

bit 7 **SSEN:** SPIx Slave Select Enable bit (Slave mode)(2)
1 = $\overline{SSx}$ pin is used for Slave mode
0 = $\overline{SSx}$ pin is not used by module, pin is controlled by port function

bit 6 **CKP:** Clock Polarity Select bit
1 = Idle state for clock is a high level; active state is a low level
0 = Idle state for clock is a low level; active state is a high level

bit 5 **MSTEN:** Master Mode Enable bit
1 = Master mode
0 = Slave mode

Note 1: The CKE bit is not used in the Framed SPI modes. Program this bit to ‘0’ for the Framed SPI modes (FRMEN = 1).
2: This bit must be cleared when FRMEN = 1.
3: Do not set both primary and secondary prescalers to a value of 1:1.

© 2011-2012 Microchip Technology Inc.

REGISTER 16-2: SPIxCON1: SPIx CONTROL REGISTER 1 (CONTINUED)

bit 4-2 **SPRE<2:0>:** Secondary Prescale bits (Master mode)[3]
111 = Secondary prescale 1:1
110 = Secondary prescale 2:1
.
.
.
000 = Secondary prescale 8:1

bit 1-0 **PPRE<1:0>:** Primary Prescale bits (Master mode)[3]
11 = Primary prescale 1:1
10 = Primary prescale 4:1
01 = Primary prescale 16:1
00 = Primary prescale 64:1

Note 1: The CKE bit is not used in the Framed SPI modes. Program this bit to '0' for the Framed SPI modes (FRMEN = 1).

2: This bit must be cleared when FRMEN = 1.

3: Do not set both primary and secondary prescalers to a value of 1:1.

REGISTER 16-3: SPIxCON2: SPIx CONTROL REGISTER 2

R/W-0	R/W-0	R/W-0	U-0	U-0	U-0	U-0	U-0
FRMEN	SPIFSD	FRMPOL	—	—	—	—	—
bit 15							bit 8

U-0	U-0	U-0	U-0	U-0	U-0	R/W-0	U-0
—	—	—	—	—	—	FRMDLY	—
bit 7							bit 0

Legend:			
R = Readable bit	W = Writable bit	U = Unimplemented bit, read as ‘0’	
-n = Value at POR	‘1’ = Bit is set	‘0’ = Bit is cleared	x = Bit is unknown

bit 15 **FRMEN:** Framed SPIx Support bit
1 = Framed SPIx support is enabled ($\overline{SSx}$ pin used as Frame Sync pulse input/output)
0 = Framed SPIx support is disabled

bit 14 **SPIFSD:** Frame Sync Pulse Direction Control bit
1 = Frame Sync pulse input (slave)
0 = Frame Sync pulse output (master)

bit 13 **FRMPOL:** Frame Sync Pulse Polarity bit
1 = Frame Sync pulse is active-high
0 = Frame Sync pulse is active-low

bit 12-2 **Unimplemented:** Read as ‘0’

bit 1 **FRMDLY:** Frame Sync Pulse Edge Select bit
1 = Frame Sync pulse coincides with first bit clock
0 = Frame Sync pulse precedes first bit clock

bit 0 **Unimplemented:** This bit must not be set to ‘1’ by the user application

© 2011-2012 Microchip Technology Inc.

17.0 INTER-INTEGRATED CIRCUIT™ (I^2C™)

Note 1: This data sheet summarizes the features of the dsPIC33FJ16(GP/MC)101/102 and dsPIC33FJ32(GP/MC)101/102/104 family devices. It is not intended to be a comprehensive reference source. To complement the information in this data sheet, refer to **Section 19. "Inter-Integrated Circuit™ (I^2C™)"** (DS70195) in the *"dsPIC33F/PIC24H Family Reference Manual"*, which is available from the Microchip web site (www.microchip.com).

2: Some registers and associated bits described in this section may not be available on all devices. Refer to **Section 4.0 "Memory Organization"** in this data sheet for device-specific register and bit information.

The Inter-Integrated Circuit™ (I^2C™) module provides complete hardware support for both Slave and Multi-Master modes of the I^2C serial communication standard, with a 16-bit interface.

The I^2C module has a 2-pin interface:

- The SCLx pin is clock
- The SDAx pin is data

The I^2C module offers the following key features:

- I^2C interface supporting both Master and Slave modes of operation.
- I^2C Slave mode supports 7-bit and 10-bit addresses
- I^2C Master mode supports 7-bit and 10-bit addresses
- I^2C port allows bidirectional transfers between master and slaves
- Serial clock synchronization for I^2C port can be used as a handshake mechanism to suspend and resume serial transfer (SCLREL control)
- I^2C supports multi-master operation, detects bus collision and arbitrates accordingly

17.1 Operating Modes

The hardware fully implements all the master and slave functions of the I^2C Standard and Fast mode specifications, as well as 7-bit and 10-bit addressing.

The I^2C module can operate either as a slave or a master on an I^2C bus.

The following types of I^2C operation are supported:

- I^2C slave operation with 7-bit address
- I^2C slave operation with 10-bit address
- I^2C master operation with 7-bit or 10-bit address

For details about the communication sequence in each of these modes, refer to the Microchip web site (www.microchip.com) for the latest *"dsPIC33F/PIC24H Family Reference Manual"* sections.

17.2 I^2C Registers

I2CxCON and I2CxSTAT are control and status registers, respectively. The I2CxCON register is readable and writable. The lower six bits of I2CxSTAT are read-only. The remaining bits of the I2CxSTAT are read/write:

- I2CxRSR is the shift register used for shifting data
- I2CxRCV is the receive buffer and the register to which data bytes are written or from which data bytes are read
- I2CxTRN is the transmit register to which bytes are written during a transmit operation
- I2CxADD register holds the slave address
- ADD10 status bit indicates 10-Bit Addressing mode
- I2CxBRG acts as the Baud Rate Generator (BRG) reload value

In receive operations, I2CxRSR and I2CxRCV together form a double-buffered receiver. When I2CxRSR receives a complete byte, it is transferred to I2CxRCV and an interrupt pulse is generated.

© 2011-2012 Microchip Technology Inc.

FIGURE 17-1: I²C™ BLOCK DIAGRAM (x = 1)

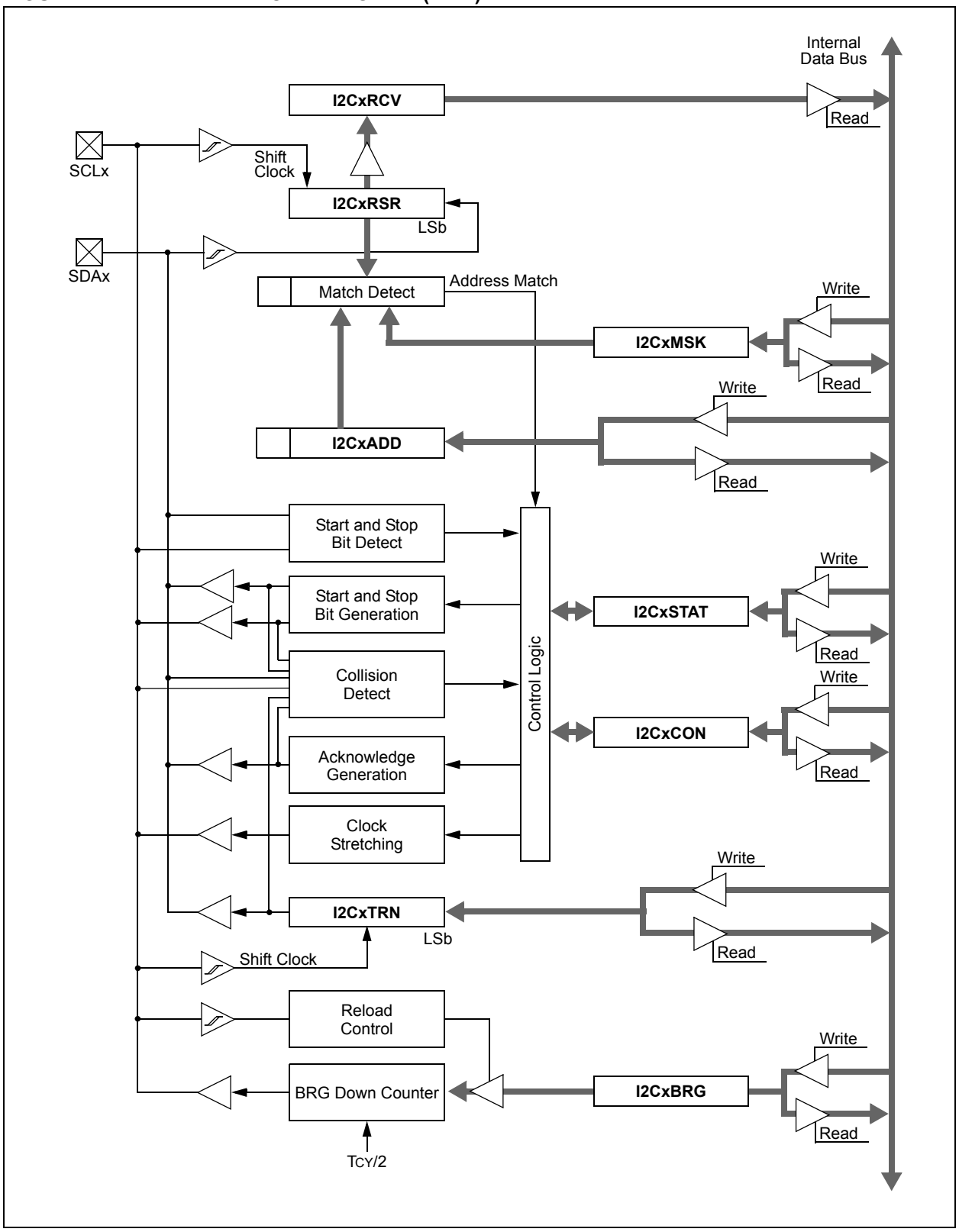

© 2011-2012 Microchip Technology Inc.

17.3 I²C Control Registers

REGISTER 17-1: I2CxCON: I2Cx CONTROL REGISTER

R/W-0	U-0	R/W-0	R/W-1, HC	R/W-0	R/W-0	R/W-0	R/W-0
I2CEN	—	I2CSIDL	SCLREL	IPMIEN	A10M	DISSLW	SMEN
bit 15							bit 8

R/W-0	R/W-0	R/W-0	R/W-0, HC	R/W-0, HC	R/W-0, HC	R/W-0, HC	R/W-0, HC
GCEN	STREN	ACKDT	ACKEN	RCEN	PEN	RSEN	SEN
bit 7							bit 0

Legend:	HC = Hardware Clearable bit		
R = Readable bit	W = Writable bit	U = Unimplemented bit, read as ‘0’	
-n = Value at POR	‘1’ = Bit is set	‘0’ = Bit is cleared	x = Bit is unknown

bit 15 **I2CEN:** I2Cx Enable bit
1 = Enables the I2Cx module and configures the SDAx and SCLx pins as serial port pins
0 = Disables the I2Cx module; all I²C pins are controlled by port functions

bit 14 **Unimplemented:** Read as ‘0’

bit 13 **I2CSIDL:** I2Cx Stop in Idle Mode bit
1 = Discontinues module operation when device enters an Idle mode
0 = Continues module operation in Idle mode

bit 12 **SCLREL:** SCLx Release Control bit (when operating as I²C slave)
1 = Releases SCLx clock
0 = Holds SCLx clock low (clock stretch)
If STREN = 1:
Bit is R/W (i.e., software can write ‘0’ to initiate stretch and write ‘1’ to release clock). Hardware clears at beginning of every slave data byte transmission. Hardware clears at end of every slave address byte reception. Hardware clears at every slave data byte reception.
If STREN = 0:
Bit is R/S (i.e., software can only write ‘1’ to release clock). Hardware clears at beginning of every slave data byte transmission. Hardware clears at end of every slave address byte reception.

bit 11 **IPMIEN:** Intelligent Peripheral Management Interface (IPMI) Enable bit
1 = IPMI mode is enabled; all addresses Acknowledged
0 = IPMI mode is disabled

bit 10 **A10M:** I2Cx 10-Bit Slave Address bit
1 = I2CxADD is a 10-bit slave address
0 = I2CxADD is a 7-bit slave address

bit 9 **DISSLW:** Disable Slew Rate Control bit
1 = Slew rate control is disabled
0 = Slew rate control is enabled

bit 8 **SMEN:** SMBus Input Levels bit
1 = Enables I/O pin thresholds compliant with SMBus specification
0 = Disables SMBus input thresholds

bit 7 **GCEN:** General Call Enable bit (when operating as I²C slave)
1 = Enables interrupt when a general call address is received in the I2CxRSR (module is enabled for reception)
0 = General call address is disabled

REGISTER 17-1: I2CxCON: I2Cx CONTROL REGISTER (CONTINUED)

bit 6 **STREN:** SCLx Clock Stretch Enable bit (when operating as I^2C slave)
Used in conjunction with the SCLREL bit.
1 = Enables software or receives clock stretching
0 = Disables software or receives clock stretching

bit 5 **ACKDT:** Acknowledge Data bit (when operating as I^2C master, applicable during master receive)
Value that will be transmitted when the software initiates an Acknowledge sequence.
1 = Sends NACK during Acknowledge
0 = Sends ACK during Acknowledge

bit 4 **ACKEN:** Acknowledge Sequence Enable bit (when operating as I^2C master, applicable during master receive)
1 = Initiates Acknowledge sequence on SDAx and SCLx pins and transmits ACKDT data bit; hardware clears at end of master Acknowledge sequence
0 = Acknowledge sequence is not in progress

bit 3 **RCEN:** Receive Enable bit (when operating as I^2C master)
1 = Enables Receive mode for I^2C; hardware clears at end of eighth bit of the master receive data byte.
0 = Receive sequence is not in progress

bit 2 **PEN:** Stop Condition Enable bit (when operating as I^2C master)
1 = Initiates Stop condition on SDAx and SCLx pins; hardware clears at end of the master Stop sequence
0 = Stop condition not in progress

bit 1 **RSEN:** Repeated Start Condition Enable bit (when operating as I^2C master)
1 = Initiates Repeated Start condition on SDAx and SCLx pins; hardware clears at end of the master Repeated Start sequence
0 = Repeated Start condition is not in progress

bit 0 **SEN:** Start Condition Enable bit (when operating as I^2C master)
1 = Initiates Start condition on SDAx and SCLx pins; hardware clears at end of master Start sequence
0 = Start condition is not in progress

© 2011-2012 Microchip Technology Inc.

REGISTER 17-2: I2CxSTAT: I2Cx STATUS REGISTER

R-0, HSC	R-0, HSC	U-0	U-0	U-0	R/C-0, HS	R-0, HSC	R-0, HSC
ACKSTAT	TRSTAT	—	—	—	BCL	GCSTAT	ADD10
bit 15							bit 8

R/C-0, HS	R/C-0, HS	R-0, HSC	R/C-0, HSC	R/C-0, HSC	R-0, HSC	R-0, HSC	R-0, HSC
IWCOL	I2COV	D_A	P	S	R_W	RBF	TBF
bit 7							bit 0

Legend:	C = Clearable bit	U = Unimplemented bit, read as ‘0’	
R = Readable bit	W = Writable bit	HS = Hardware Settable bit	HSC = Hardware Settable/Clearable bit
-n = Value at POR	‘1’ = Bit is set	‘0’ = Bit is cleared	x = Bit is unknown

bit 15 **ACKSTAT:** Acknowledge Status bit
(when operating as I^2C master, applicable to master transmit operation)
1 = NACK received from slave
0 = ACK received from slave
Hardware sets or clears at end of slave Acknowledge.

bit 14 **TRSTAT:** Transmit Status bit (when operating as I^2C master, applicable to master transmit operation)
1 = Master transmit is in progress (8 bits + ACK)
0 = Master transmit is not in progress
Hardware sets at beginning of master transmission. Hardware clears at end of slave Acknowledge.

bit 13-11 **Unimplemented:** Read as ‘0’

bit 10 **BCL:** Master Bus Collision Detect bit
1 = A bus collision has been detected during a master operation
0 = No collision
Hardware sets at detection of bus collision.

bit 9 **GCSTAT:** General Call Status bit
1 = General call address was received
0 = General call address was not received
Hardware sets when address matches general call address. Hardware clears at Stop detection.

bit 8 **ADD10:** 10-Bit Address Status bit
1 = 10-bit address was matched
0 = 10-bit address was not matched
Hardware sets at match of 2nd byte of matched 10-bit address. Hardware clears at Stop detection.

bit 7 **IWCOL:** Write Collision Detect bit
1 = An attempt to write to the I2CxTRN register failed because the I^2C module is busy
0 = No collision
Hardware sets at occurrence of a write to I2CxTRN while busy (cleared by software).

bit 6 **I2COV:** Receive Overflow Flag bit
1 = A byte was received while the I2CxRCV register is still holding the previous byte
0 = No overflow
Hardware sets at attempt to transfer I2CxRSR to I2CxRCV (cleared by software).

bit 5 **D_A:** Data/Address bit (when operating as I^2C slave)
1 = Indicates that the last byte received was data
0 = Indicates that the last byte received was device address
Hardware clears at device address match. Hardware sets by reception of a slave byte.

bit 4 **P:** Stop bit
1 = Indicates that a Stop bit has been detected last
0 = Stop bit was not detected last
Hardware sets or clears when Start, Repeated Start or Stop is detected.

REGISTER 17-2: I2CxSTAT: I2Cx STATUS REGISTER (CONTINUED)

bit 3 **S:** Start bit

1 = Indicates that a Start (or Repeated Start) bit has been detected last
0 = Start bit was not detected last
Hardware sets or clears when Start, Repeated Start or Stop is detected.

bit 2 **R_W:** Read/Write Information bit (when operating as I^2C slave)

1 = Read – indicates data transfer is output from slave
0 = Write – indicates data transfer is input to slave
Hardware sets or clears after reception of an I^2C device address byte.

bit 1 **RBF:** Receive Buffer Full Status bit

1 = Receive is complete, I2CxRCV is full
0 = Receive is not complete, I2CxRCV is empty
Hardware sets when I2CxRCV is written with received byte. Hardware clears when software reads I2CxRCV.

bit 0 **TBF:** Transmit Buffer Full Status bit

1 = Transmit in progress, I2CxTRN is full
0 = Transmit complete, I2CxTRN is empty
Hardware sets when software writes to I2CxTRN. Hardware clears at completion of data transmission.

© 2011-2012 Microchip Technology Inc.

REGISTER 17-3: I2CxMSK: I2Cx SLAVE MODE ADDRESS MASK REGISTER

U-0	U-0	U-0	U-0	U-0	U-0	R/W-0	R/W-0
—	—	—	—	—	—	AMSK9	AMSK8
bit 15							bit 8

R/W-0	R/W-0	R/W-0	R/W-0	R/W-0	R/W-0	R/W-0	R/W-0
AMSK7	AMSK6	AMSK5	AMSK4	AMSK3	AMSK2	AMSK1	AMSK0
bit 7							bit 0

Legend:			
R = Readable bit	W = Writable bit	U = Unimplemented bit, read as ‘0’	
-n = Value at POR	‘1’ = Bit is set	‘0’ = Bit is cleared	x = Bit is unknown

bit 15-10 **Unimplemented:** Read as ‘0’

bit 9-0 **AMSKx:** Mask for Address Bit x Select bits

1 = Enables masking for Bit x of incoming message address; bit match not required in this position
0 = Disables masking for Bit x; bit match required in this position

NOTES:

© 2011-2012 Microchip Technology Inc.

18.0 UNIVERSAL ASYNCHRONOUS RECEIVER TRANSMITTER (UART)

Note 1: This data sheet summarizes the features of the dsPIC33FJ16(GP/MC)101/102 and dsPIC33FJ32(GP/MC)101/102/104 family devices. It is not intended to be a comprehensive reference source. To complement the information in this data sheet, refer to **Section 17. "UART"** (DS70188) in the *"dsPIC33F/PIC24H Family Reference Manual"*, which is available from the Microchip web site (www.microchip.com).

2: Some registers and associated bits described in this section may not be available on all devices. Refer to **Section 4.0 "Memory Organization"** in this data sheet for device-specific register and bit information.

The Universal Asynchronous Receiver Transmitter (UART) module is one of the serial I/O modules available in the dsPIC33FJ16(GP/MC)101/102 and dsPIC33FJ32(GP/MC)101/102/104 device family. The UART is a full-duplex asynchronous system that can communicate with peripheral devices, such as personal computers, LIN/J2602, RS-232 and RS-485 interfaces. The module also supports a hardware flow control option with the $\overline{\text{UxCTS}}$ and $\overline{\text{UxRTS}}$ pins, and also includes an IrDA® encoder and decoder.

The primary features of the UART module are:

- Full-Duplex, 8-Bit or 9-Bit Data Transmission through the UxTX and UxRX Pins
- Even, Odd or No Parity options (for 8-bit data)
- One or Two Stop bits
- Hardware Flow Control Option with $\overline{\text{UxCTS}}$ and $\overline{\text{UxRTS}}$ Pins
- Fully Integrated Baud Rate Generator with 16-Bit Prescaler
- Baud Rates Ranging from 1 Mbps to 6 bps at 16x mode at 16 MIPS
- Baud Rates Ranging from 4 Mbps to 24.4 bps at 4x mode at 16 MIPS
- 4-Deep First-In First-Out (FIFO) Transmit Data Buffer
- 4-Deep FIFO Receive Data Buffer
- Parity, Framing and Buffer Overrun Error Detection
- Support for 9-bit mode with Address Detect (9th bit = `1`)
- Transmit and Receive Interrupts
- A Separate Interrupt for all UART Error Conditions
- Loopback mode for Diagnostic Support
- Support for Sync and Break Characters
- Support for Automatic Baud Rate Detection
- IrDA® Encoder and Decoder Logic
- 16x Baud Clock Output for IrDA® Support

A simplified block diagram of the UART module is shown in Figure 18-1. The UART module consists of these key hardware elements:

- Baud Rate Generator
- Asynchronous Transmitter
- Asynchronous Receiver

FIGURE 18-1: UART SIMPLIFIED BLOCK DIAGRAM

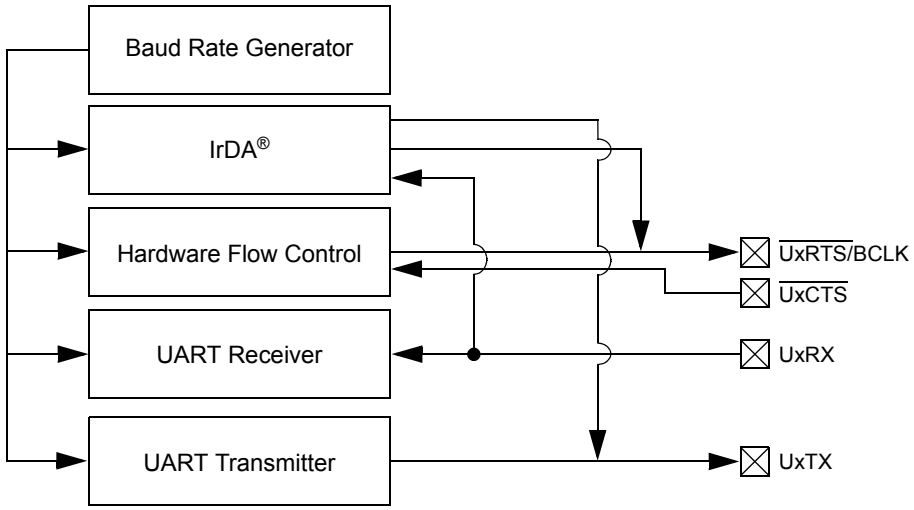

18.1 UART Helpful Tips

1. In multi-node direct connect UART networks, UART receive inputs react to the complementary logic level, defined by the URXINV bit (UxMODE<4>) which defines the Idle state, the default of which is logic high (i.e., URXINV = 0). Because remote devices do not initialize at the same time, it is likely that one of the devices, because the RX line is floating, will trigger a Start bit detection and will cause the first byte received after the device has been initialized to be invalid. To avoid this situation, the user should use a pull-up or pull-down resistor on the RX pin depending on the value of the URXINV bit.
   a) If URXINV = 0, use a pull-up resistor on the RX pin.
   b) If URXINV = 1, use a pull-down resistor on the RX pin.
2. The first character received on a wake-up from Sleep mode, caused by activity on the UxRX pin of the UART module, will be invalid. In Sleep mode, peripheral clocks are disabled. By the time the oscillator system has restarted and stabilized from Sleep mode, the baud rate bit sampling clock, relative to the incoming UxRX bit timing, is no longer synchronized, resulting in the first character being invalid. This is to be expected.

18.2 UART Resources

Many useful resources are provided on the main product page of the Microchip web site for the devices listed in this data sheet. This product page, which can be accessed using this link, contains the latest updates and additional information.

Note:	In the event you are not able to access the product page using the link above, enter this URL in your browser: http://www.microchip.com/wwwproducts/Devices.aspx?dDocName=en554109

18.2.1 KEY RESOURCES

- **Section 17. "UART"** (DS70188) in the *"dsPIC33F/PIC24H Family Reference Manual"*
- Code Samples
- Application Notes
- Software Libraries
- Webinars
- All related *"dsPIC33F/PIC24H Family Reference Manual"* sections
- Development Tools

© 2011-2012 Microchip Technology Inc.

18.3 UART Control Registers

REGISTER 18-1: UxMODE: UARTx MODE REGISTER

R/W-0	U-0	R/W-0	R/W-0	R/W-0	U-0	R/W-0	R/W-0
UARTEN(1)	—	USIDL	IREN(2)	RTSMD	—	UEN<1:0>	
bit 15							bit 8

R/W-0, HC	R/W-0	R/W-0, HC	R/W-0	R/W-0	R/W-0	R/W-0	R/W-0
WAKE	LPBACK	ABAUD	URXINV	BRGH	PDSEL<1:0>		STSEL
bit 7							bit 0

Legend:	HC = Hardware Clearable bit		
R = Readable bit	W = Writable bit	U = Unimplemented bit, read as ‘0’	
-n = Value at POR	‘1’ = Bit is set	‘0’ = Bit is cleared	x = Bit is unknown

bit 15 **UARTEN:** UARTx Enable bit(1)
- 1 = UARTx is enabled; all UARTx pins are controlled by UARTx as defined by the UEN<1:0> bits
- 0 = UARTx is disabled; all UARTx pins are controlled by port latches; UARTx power consumption is minimal

bit 14 **Unimplemented:** Read as ‘0’

bit 13 **USIDL:** UARTx Stop in Idle Mode bit
- 1 = Discontinues module operation when device enters Idle mode
- 0 = Continues module operation in Idle mode

bit 12 **IREN:** IrDA® Encoder and Decoder Enable bit(2)
- 1 = IrDA encoder and decoder are enabled
- 0 = IrDA encoder and decoder are disabled

bit 11 **RTSMD:** UARTx Mode Selection for $\overline{\text{UxRTS}}$ Pin bit
- 1 = $\overline{\text{UxRTS}}$ pin in Simplex mode
- 0 = $\overline{\text{UxRTS}}$ pin in Flow Control mode

bit 10 **Unimplemented:** Read as ‘0’

bit 9-8 **UEN<1:0>:** UARTx Pin Enable bits
- 11 = UxTX, UxRX and BCLK pins are enabled and used; $\overline{\text{UxCTS}}$ pin is controlled by port latches
- 10 = UxTX, UxRX, $\overline{\text{UxCTS}}$ and $\overline{\text{UxRTS}}$ pins are enabled and used
- 01 = UxTX, UxRX and $\overline{\text{UxRTS}}$ pins are enabled and used; $\overline{\text{UxCTS}}$ pin is controlled by port latches
- 00 = UxTX and UxRX pins are enabled and used; $\overline{\text{UxCTS}}$ and $\overline{\text{UxRTS}}$/BCLK pins are controlled by port latches

bit 7 **WAKE:** Wake-up on Start bit Detect During Sleep Mode Enable bit
- 1 = UARTx will continue to sample the UxRX pin; interrupt is generated on falling edge; bit is cleared in hardware on following rising edge
- 0 = No wake-up is enabled

bit 6 **LPBACK:** UARTx Loopback Mode Select bit
- 1 = Enables Loopback mode
- 0 = Loopback mode is disabled

bit 5 **ABAUD:** Auto-Baud Enable bit
- 1 = Enables baud rate measurement on the next character – requires reception of a Sync field (55h) before other data; cleared in hardware upon completion
- 0 = Baud rate measurement is disabled or completed

Note 1: Refer to **Section 17. “UART”** (DS70188) in the *“dsPIC33F/PIC24H Family Reference Manual”* for information on enabling the UART module for receive or transmit operation.

2: This feature is available for 16x BRG mode (BRGH = 0) only.

REGISTER 18-1: UxMODE: UARTx MODE REGISTER (CONTINUED)

bit 4 **URXINV:** UARTx Receive Polarity Inversion bit
1 = UxRX Idle state is '0'
0 = UxRX Idle state is '1'

bit 3 **BRGH:** High Baud Rate Enable bit
1 = BRG generates 4 clocks per bit period (4x baud clock, High-Speed mode)
0 = BRG generates 16 clocks per bit period (16x baud clock, Standard mode)

bit 2-1 **PDSEL<1:0>:** Parity and Data Selection bits
11 = 9-bit data, no parity
10 = 8-bit data, odd parity
01 = 8-bit data, even parity
00 = 8-bit data, no parity

bit 0 **STSEL:** Stop Bit Selection bit
1 = Two Stop bits
0 = One Stop bit

Note 1: Refer to **Section 17. "UART"** (DS70188) in the *"dsPIC33F/PIC24H Family Reference Manual"* for information on enabling the UART module for receive or transmit operation.

2: This feature is available for 16x BRG mode (BRGH = 0) only.

© 2011-2012 Microchip Technology Inc.

REGISTER 18-2: UxSTA: UARTx STATUS AND CONTROL REGISTER

R/W-0	R/W-0	R/W-0	U-0	R/W-0, HC	R/W-0	R-0	R-1
UTXISEL1	UTXINV	UTXISEL0	—	UTXBRK	UTXEN(1)	UTXBF	TRMT
bit 15							bit 8

R/W-0	R/W-0	R/W-0	R-1	R-0	R-0	R/C-0	R-0
URXISEL<1:0>		ADDEN	RIDLE	PERR	FERR	OERR	URXDA
bit 7							bit 0

Legend:	C = Clearable bit	HC = Hardware Clearable bit	
R = Readable bit	W = Writable bit	U = Unimplemented bit, read as ‘0’	
-n = Value at POR	‘1’ = Bit is set	‘0’ = Bit is cleared	x = Bit is unknown

bit 15,13 **UTXISEL<1:0>:** UARTx Transmission Interrupt Mode Selection bits
- 11 = Reserved; do not use
- 10 = Interrupt when a character is transferred to the Transmit Shift Register (TSR) and as a result, the transmit buffer becomes empty
- 01 = Interrupt when the last character is shifted out of the Transmit Shift Register; all transmit operations are completed
- 00 = Interrupt when a character is transferred to the Transmit Shift Register (this implies there is at least one character open in the transmit buffer)

bit 14 **UTXINV:** UARTx Transmit Polarity Inversion bit

If IREN = 0:
- 1 = UxTX Idle state is ‘0’
- 0 = UxTX Idle state is ‘1’

If IREN = 1:
- 1 = IrDA encoded, UxTX Idle state is ‘1’
- 0 = IrDA encoded, UxTX Idle state is ‘0’

bit 12 **Unimplemented:** Read as ‘0’

bit 11 **UTXBRK:** UARTx Transmit Break bit
- 1 = Sends Sync Break on next transmission – Start bit, followed by twelve ‘0’ bits, followed by Stop bit; cleared by hardware upon completion
- 0 = Sync Break transmission is disabled or completed

bit 10 **UTXEN:** UARTx Transmit Enable bit(1)
- 1 = Transmit is enabled, UxTX pin is controlled by UARTx
- 0 = Transmit is disabled, any pending transmission is aborted and the buffer is reset; UxTX pin is controlled by port

bit 9 **UTXBF:** UARTx Transmit Buffer Full Status bit (read-only)
- 1 = Transmit buffer is full
- 0 = Transmit buffer is not full, at least one more character can be written

bit 8 **TRMT:** Transmit Shift Register Empty bit (read-only)
- 1 = Transmit Shift Register is empty and transmit buffer is empty (the last transmission has completed)
- 0 = Transmit Shift Register is not empty, a transmission is in progress or queued

bit 7-6 **URXISEL<1:0>:** UARTx Receive Interrupt Mode Selection bits
- 11 = Interrupt is set on UxRSR transfer, making the receive buffer full (i.e., has 4 data characters)
- 10 = Interrupt is set on UxRSR transfer, making the receive buffer 3/4 full (i.e., has 3 data characters)
- 0x = Interrupt is set when any character is received and transferred from the UxRSR to the receive buffer; receive buffer has one or more characters

Note 1: Refer to **Section 17. “UART”** (DS70188) in the *“dsPIC33F/PIC24H Family Reference Manual”* for information on enabling the UART module for transmit operation.

REGISTER 18-2: UxSTA: UARTx STATUS AND CONTROL REGISTER (CONTINUED)

bit 5 **ADDEN:** Address Character Detect bit (Bit 8 of received data = 1)
1 = Address Detect mode is enabled; if 9-bit mode is not selected, this does not take effect
0 = Address Detect mode is disabled

bit 4 **RIDLE:** Receiver Idle bit (read-only)
1 = Receiver is Idle
0 = Receiver is active

bit 3 **PERR:** Parity Error Status bit (read-only)
1 = Parity error has been detected for the current character (character at the top of the receive FIFO)
0 = Parity error has not been detected

bit 2 **FERR:** Framing Error Status bit (read-only)
1 = Framing error has been detected for the current character (character at the top of the receive FIFO)
0 = Framing error has not been detected

bit 1 **OERR:** Receive Buffer Overrun Error Status bit (read-only/clear only)
1 = Receive buffer has overflowed
0 = Receive buffer has not overflowed; clearing a previously set OERR bit (1 → 0 transition) will reset the receiver buffer and the UxRSR to the empty state

bit 0 **URXDA:** Receive Buffer Data Available bit (read-only)
1 = Receive buffer has data, at least one more character can be read
0 = Receive buffer is empty

Note 1: Refer to **Section 17. "UART"** (DS70188) in the *"dsPIC33F/PIC24H Family Reference Manual"* for information on enabling the UART module for transmit operation.

© 2011-2012 Microchip Technology Inc.

19.0 10-BIT ANALOG-TO-DIGITAL CONVERTER (ADC)

Note 1: This data sheet summarizes the features of the dsPIC33FJ16(GP/MC)101/102 and dsPIC33FJ32(GP/MC)101/102/104 family devices. It is not intended to be a comprehensive reference source. To complement the information in this data sheet, refer to **Section 16. "Analog-to-Digital Converter (ADC)"** (DS70183) in the *"dsPIC33F/PIC24H Family Reference Manual",* which is available from the Microchip web site (www.microchip.com).

2: Some registers and associated bits described in this section may not be available on all devices. Refer to **Section 4.0 "Memory Organization"** in this data sheet for device-specific register and bit information.

The dsPIC33FJ16(GP/MC)101/102 and dsPIC33FJ32(GP/MC)101/102/104 devices have up to 14 ADC module input channels.

19.1 Key Features

The 10-bit ADC configuration has the following key features:

- Successive Approximation (SAR) conversion
- Conversion speeds of up to 1.1 Msps
- Up to 14 analog input pins
- Four Sample-and-Hold (S&H) circuits for simultaneous sampling of up to four analog input pins
- Automatic Channel Scan mode
- Selectable conversion trigger source
- Selectable Buffer Fill modes
- Four result alignment options (signed/unsigned, fractional/integer)
- Operation during CPU Sleep and Idle modes
- 16-word conversion result buffer

Depending on the particular device pinout, the ADC can have up to 14 analog input pins.

Block diagrams of the ADC module are shown in Figure 19-1 through Figure 19-3.

19.2 ADC Initialization

To configure the ADC module:

1. Select port pins as analog inputs (AD1PCFGL<15:0>).
2. Select the analog conversion clock to match the desired data rate with the processor clock (ADxCON3<7:0>).
3. Determine how many Sample-and-Hold channels will be used (ADxCON2<9:8>).
4. Select the appropriate sample/conversion sequence (ADxCON1<7:5> and ADxCON3<12:8>).
5. Select the way conversion results are presented in the buffer (ADxCON1<9:8>).
6. Turn on the ADC module (ADxCON1<15>).
7. Configure ADC interrupt (if required):
   a) Clear the ADxIF bit.
   b) Select the ADC interrupt priority.

FIGURE 19-1: ADC1 BLOCK DIAGRAM FOR dsPIC33FJXX(GP/MC)101 DEVICES

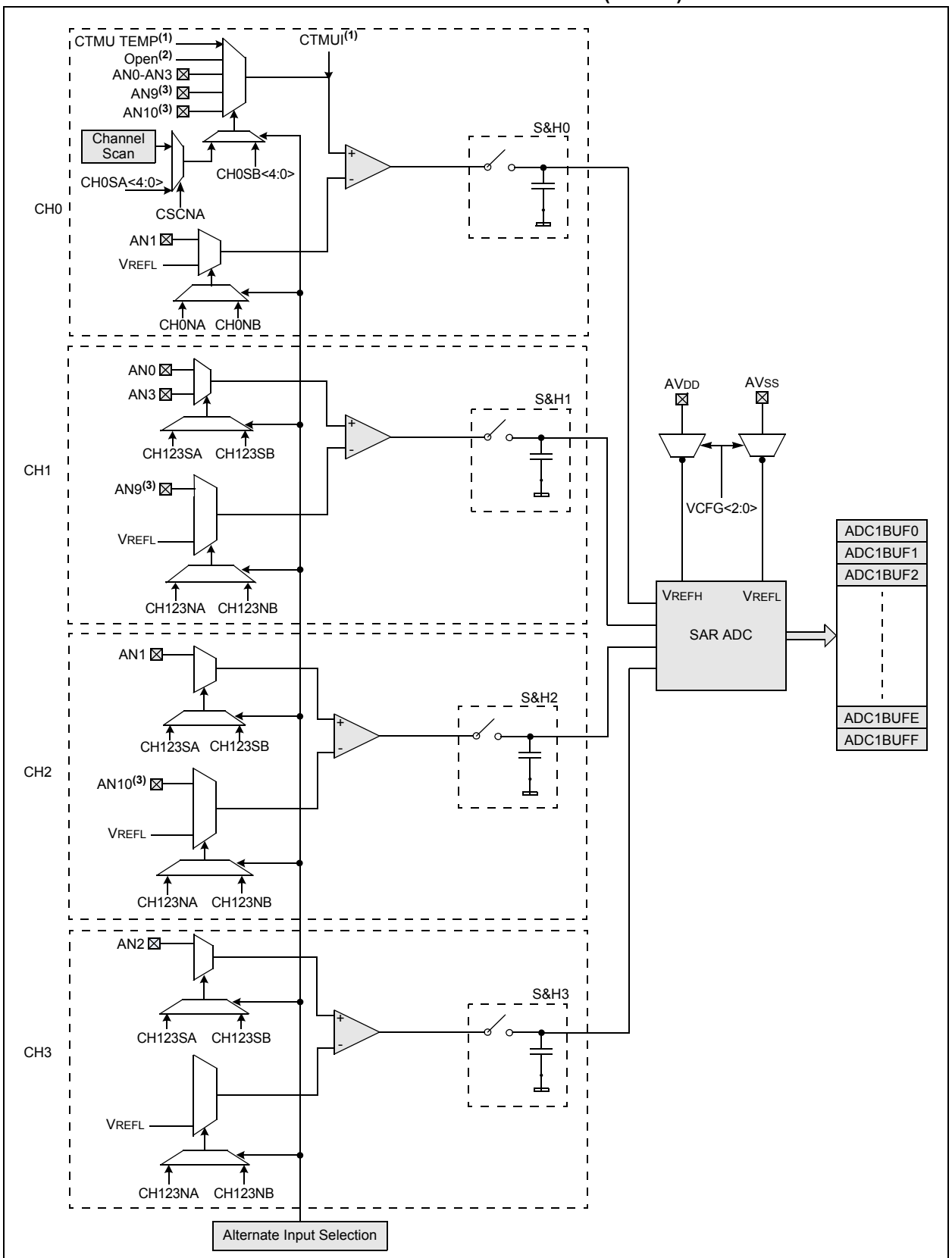

Note 1: Internally connected to the CTMU module.
2: This selection is only used with CTMU capacitive and time measurement.
3: This pin is available in dsPIC33FJ32(GP/MC)101 devices only.

© 2011-2012 Microchip Technology Inc.

FIGURE 19-2: ADC1 BLOCK DIAGRAM FOR dsPIC33FJXX(GP/MC)102 DEVICES

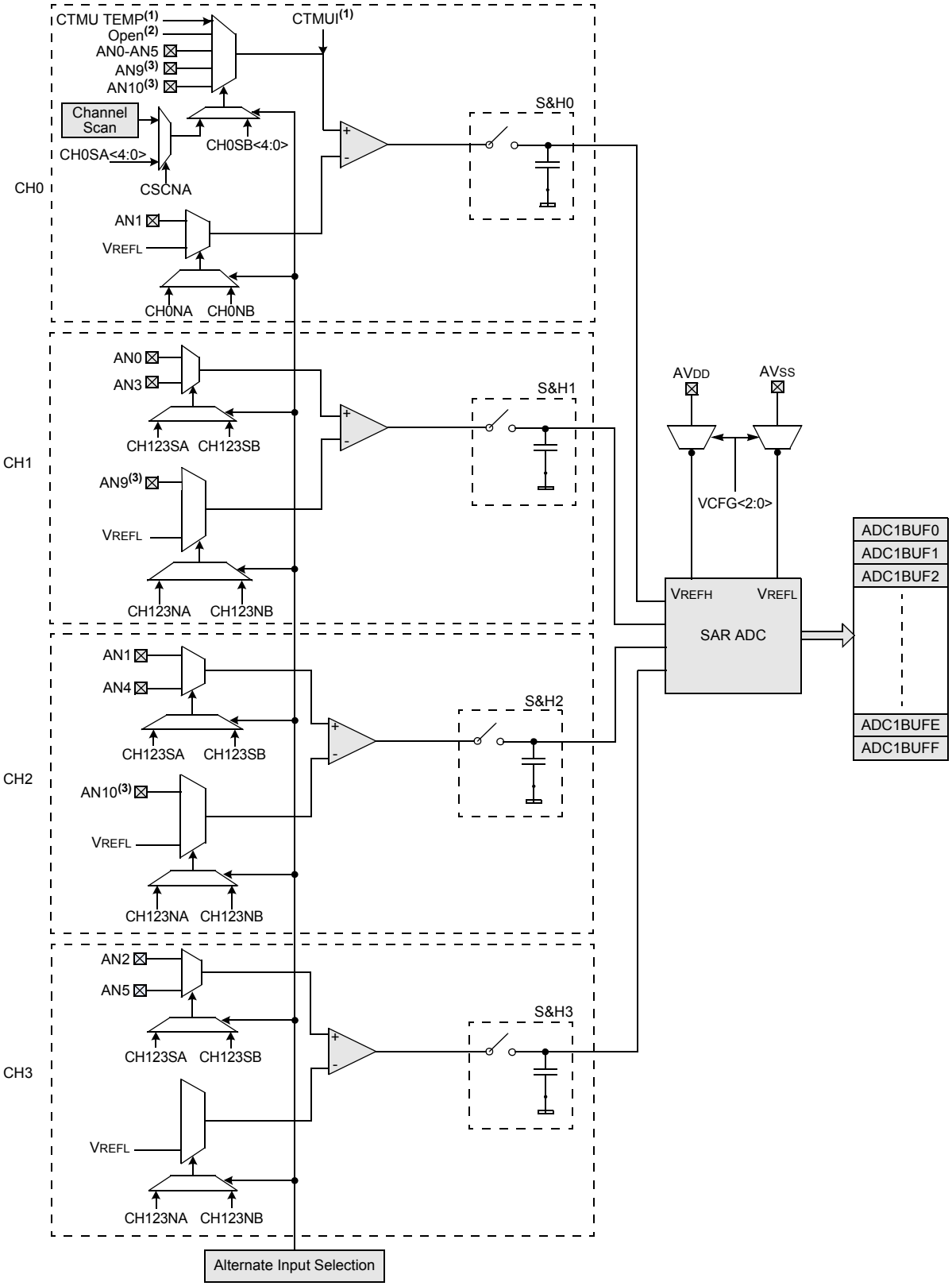

Note 1: Internally connected to the CTMU module.
2: This selection is only used with CTMU capacitive and time measurement.
3: This pin is available in dsPIC33FJ32(GP/MC)102 devices only.

FIGURE 19-3: ADC1 BLOCK DIAGRAM FOR dsPIC33FJ32(GP/MC)104 DEVICES

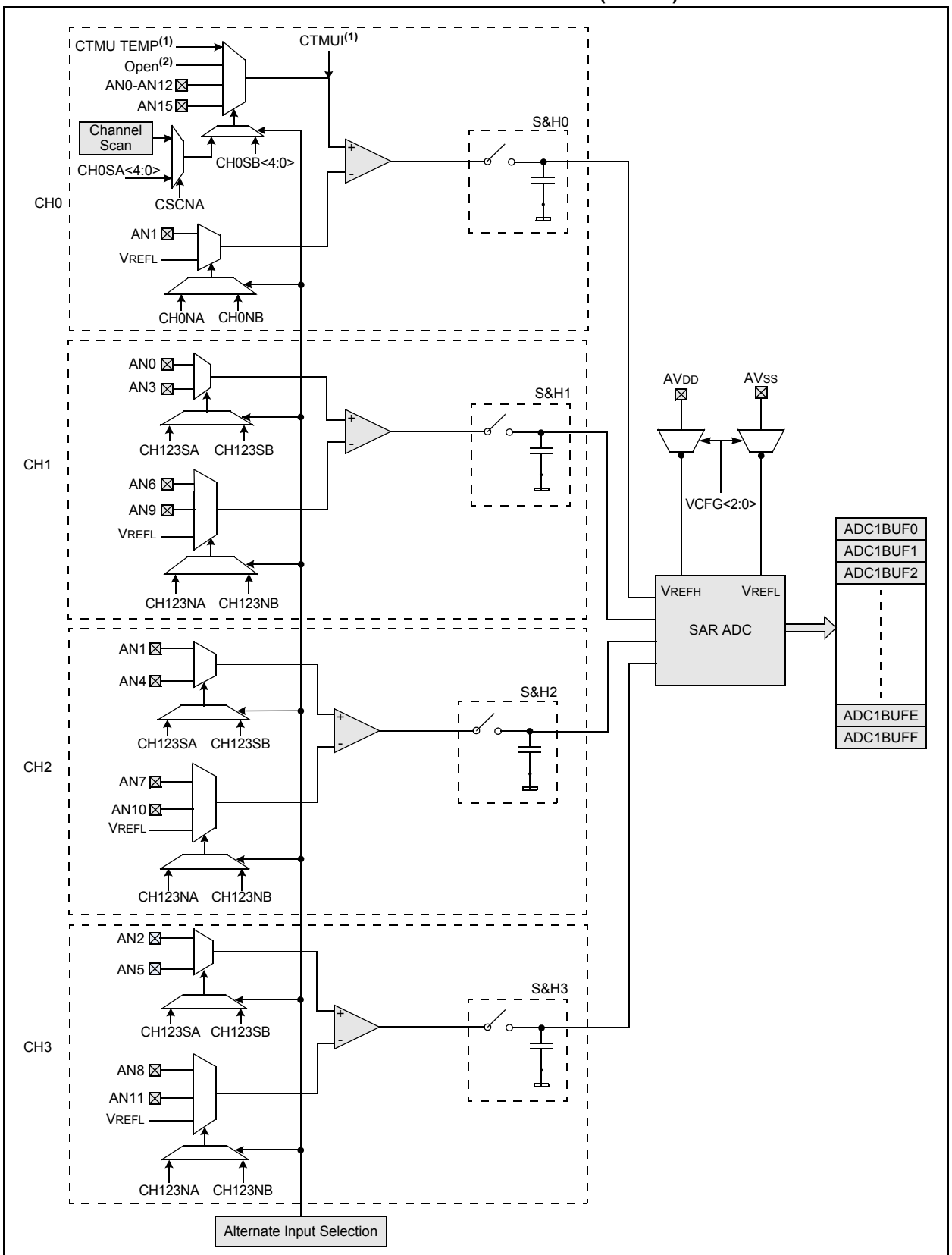

Note 1: Internally connected to the CTMU module.
2: This selection is only used with CTMU capacitive and time measurement.

© 2011-2012 Microchip Technology Inc.

FIGURE 19-4: ADC CONVERSION CLOCK PERIOD BLOCK DIAGRAM

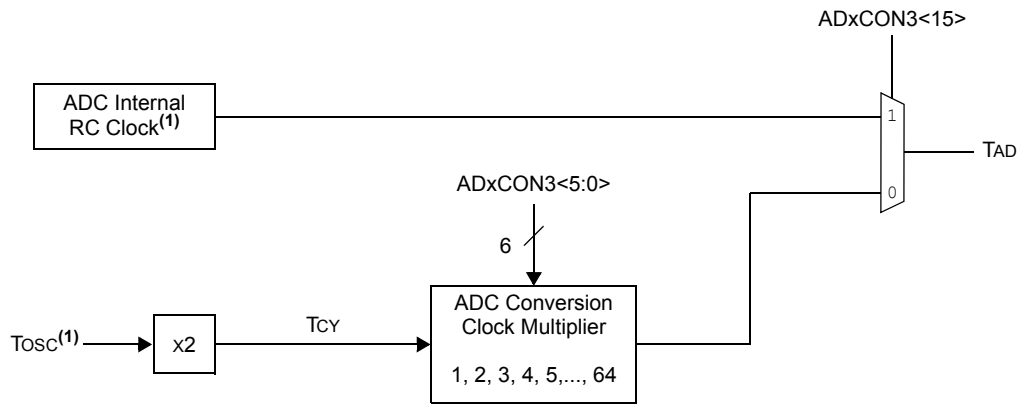

Note 1: See the ADC specifications in **Section 26.0 "Electrical Characteristics"** for the exact RC clock value.

19.3 ADC Helpful Tips

1. The SMPI<3:0> (AD1CON2<5:2>) control bits:
   a) Determine when the ADC interrupt flag is set and an interrupt is generated if enabled.
   b) When the CSCNA bit (AD1CON2<10>) is set to '1', determine when the ADC analog scan channel list, defined in the AD1CSSL register, starts over from the beginning.
2. The ADC has 16 result buffers. ADC conversion results are stored sequentially in ADC1BUF0-ADC1BUFF regardless of which analog inputs are being used, subject to the SMPI<3:0> bits (AD1CON2<5:2>). There is no relationship between the ANx input being measured and which ADC buffer (ADC1BUF0-ADC1BUFF) that the conversion results will be placed in.
3. The DONE bit (AD1CON1<0>) is only cleared at the start of each conversion and is set at the completion of the conversion, but remains set indefinitely, even through the next sample phase until the next conversion begins. If application code is monitoring the DONE bit in any kind of software loop, the user must consider this behavior because the CPU code execution is faster than the ADC. As a result, in Manual Sample mode, particularly where the user's code is setting the SAMP bit (AD1CON1<1>), the DONE bit should also be cleared by the user application just before setting the SAMP bit.

19.4 ADC Resources

Many useful resources are provided on the main product page of the Microchip web site for the devices listed in this data sheet. This product page, which can be accessed using this link, contains the latest updates and additional information.

Note: In the event you are not able to access the product page using the link above, enter this URL in your browser: http://www.microchip.com/wwwproducts/Devices.aspx?dDocName=en554109

19.4.1 KEY RESOURCES

- **Section 16. "Analog-to-Digital Converter (ADC)"** (DS70183) in the *"dsPIC33F/PIC24H Family Reference Manual"*
- Code Samples
- Application Notes
- Software Libraries
- Webinars
- All related *"dsPIC33F/PIC24H Family Reference Manual"* sections
- Development Tools

19.5 ADC Control Registers

REGISTER 19-1: AD1CON1: ADC1 CONTROL REGISTER 1

R/W-0	U-0	R/W-0	U-0	U-0	U-0	R/W-0	R/W-0
ADON	—	ADSIDL	—	—	—	FORM<1:0>	
bit 15							bit 8

R/W-0	R/W-0	R/W-0	U-0	R/W-0	R/W-0	R/W-0, HC, HS	R/C-0, HC, HS
SSRC<2:0>			—	SIMSAM	ASAM	SAMP	DONE
bit 7							bit 0

Legend:	HC = Hardware Clearable bit	HS = Hardware Settable bit	C = Clearable bit
R = Readable bit	W = Writable bit	U = Unimplemented bit, read as ‘0’	
-n = Value at POR	‘1’ = Bit is set	‘0’ = Bit is cleared	x = Bit is unknown

bit 15 **ADON:** ADC Operating Mode bit
`1` = ADC module is operating
`0` = ADC is off

bit 14 **Unimplemented:** Read as ‘`0`’

bit 13 **ADSIDL:** ADC Stop in Idle Mode bit
`1` = Discontinues module operation when device enters Idle mode
`0` = Continues module operation in Idle mode

bit 12-10 **Unimplemented:** Read as ‘`0`’

bit 9-8 **FORM<1:0>:** Data Output Format bits
`11` = Signed fractional (DOUT = `sddd dddd dd00 0000`, where `s` = `.NOT.d<9>`)
`10` = Fractional (DOUT = `dddd dddd dd00 0000`)
`01` = Signed integer (DOUT = `ssss sssd dddd dddd`, where `s` = `.NOT.d<9>`)
`00` = Integer (DOUT = `0000 00dd dddd dddd`)

bit 7-5 **SSRC<2:0>:** Sample Clock Source Select bits
`111` = Internal counter ends sampling and starts conversion (auto-convert)
`110` = CTMU
`101` = Reserved
`100` = Reserved
`011` = Motor control PWM interval ends sampling and starts conversion(1)
`010` = GP Timer3 compare ends sampling and starts conversion
`001` = Active transition on INT0 pin ends sampling and starts conversion
`000` = Clearing SAMP bit ends sampling and starts conversion

bit 4 **Unimplemented:** Read as ‘`0`’

bit 3 **SIMSAM:** Simultaneous Sample Select bit (applicable only when CHPS<1:0> = `01` or `1x`)
`1` = Samples CH0, CH1, CH2, CH3 simultaneously (when CHPS<1:0> = `1x`); or samples CH0 and CH1 simultaneously (when CHPS<1:0> = `01`)
`0` = Samples multiple channels individually in sequence

bit 2 **ASAM:** ADC Sample Auto-Start bit
`1` = Sampling begins immediately after last conversion; SAMP bit is auto-set
`0` = Sampling begins when the SAMP bit is set

Note 1: This feature is available in dsPIC33FJ(16/32)MC10X devices only.

© 2011-2012 Microchip Technology Inc.

REGISTER 19-1: AD1CON1: ADC1 CONTROL REGISTER 1 (CONTINUED)

bit 1 **SAMP:** ADC Sample Enable bit

1 = ADC Sample-and-Hold amplifiers are sampling
0 = ADC Sample-and-Hold amplifiers are holding
If ASAM = 0, software can write '1' to begin sampling; automatically set by hardware if ASAM = 1.
If SSRC<2:0> = 000, software can write '0' to end sampling and start conversion. If SSRC<2:0> ≠ 000, automatically cleared by hardware to end sampling and start conversion.

bit 0 **DONE:** ADC Conversion Status bit

1 = ADC conversion cycle is completed
0 = ADC conversion has not started or is in progress
Automatically set by hardware when ADC conversion is complete. Software can write '0' to clear the DONE bit status (software not allowed to write '1'). Clearing this bit will NOT affect any operation in progress. Automatically cleared by hardware at start of a new conversion.

Note 1: This feature is available in dsPIC33FJ(16/32)MC10X devices only.

REGISTER 19-2: AD1CON2: ADC1 CONTROL REGISTER 2

R/W-0	R/W-0	R/W-0	U-0	U-0	R/W-0	R/W-0	R/W-0
VCFG<2:0>			—	—	CSCNA	CHPS<1:0>	
bit 15							bit 8

R-0	U-0	R/W-0	R/W-0	R/W-0	R/W-0	R/W-0	R/W-0
BUFS	—	SMPI<3:0>				BUFM	ALTS
bit 7							bit 0

Legend:			
R = Readable bit	W = Writable bit	U = Unimplemented bit, read as ‘0’	
-n = Value at POR	‘1’ = Bit is set	‘0’ = Bit is cleared	x = Bit is unknown

bit 15-13 **VCFG<2:0>:** Converter Voltage Reference Configuration bits

	ADREF+	ADREF-
xxx	AVDD	AVSS

bit 12-11 **Unimplemented:** Read as ‘0’

bit 10 **CSCNA:** Scan Input Selections for CH0+ During Sample A bit
1 = Scans inputs
0 = Does not scan inputs

bit 9-8 **CHPS<1:0>:** Select Channels Utilized bits
1x = Converts CH0, CH1, CH2 and CH3
01 = Converts CH0 and CH1
00 = Converts CH0

bit 7 **BUFS:** Buffer Fill Status bit (valid only when BUFM = 1)
1 = ADC is currently filling second half of buffer, user should access data in the first half
0 = ADC is currently filling first half of buffer, user application should access data in the second half

bit 6 **Unimplemented:** Read as ‘0’

bit 5-2 **SMPI<3:0>:** Sample/Convert Sequences Per Interrupt Selection bits
1111 = Interrupts at the completion of conversion for each 16th sample/convert sequence
1110 = Interrupts at the completion of conversion for each 15th sample/convert sequence
•
•
•
0001 = Interrupts at the completion of conversion for each 2nd sample/convert sequence
0000 = Interrupts at the completion of conversion for each sample/convert sequence

bit 1 **BUFM:** Buffer Fill Mode Select bit
1 = Starts filling first half of buffer on first interrupt and the second half of buffer on next interrupt
0 = Always starts filling buffer from the beginning

bit 0 **ALTS:** Alternate Input Sample Mode Select bit
1 = Uses channel input selects for Sample A on first sample and Sample B on next sample
0 = Always uses channel input selects for Sample A

© 2011-2012 Microchip Technology Inc.

REGISTER 19-3: AD1CON3: ADC1 CONTROL REGISTER 3

R/W-0	U-0	U-0	R/W-0	R/W-0	R/W-0	R/W-0	R/W-0
ADRC	—	—	SAMC<4:0>(1)				
bit 15							bit 8

R/W-0	R/W-0	R/W-0	R/W-0	R/W-0	R/W-0	R/W-0	R/W-0
ADCS<7:0>(2)							
bit 7							bit 0

Legend:			
R = Readable bit	W = Writable bit	U = Unimplemented bit, read as ‘0’	
-n = Value at POR	‘1’ = Bit is set	‘0’ = Bit is cleared	x = Bit is unknown

bit 15 **ADRC:** ADC Conversion Clock Source bit
1 = ADC internal RC clock
0 = Clock derived from system clock

bit 14-13 **Unimplemented:** Read as ‘0’

bit 12-8 **SAMC<4:0>:** Auto-Sample Time bits(1)
11111 = 31 TAD
•
•
•
00001 = 1 TAD
00000 = 0 TAD

bit 7-0 **ADCS<7:0>:** ADC Conversion Clock Select bits(2)
11111111 = Reserved
•
•
•
•
01000000 = Reserved
00111111 = TCY • (ADCS<7:0> + 1) = 64 • TCY = TAD
•
•
•
00000010 = TCY • (ADCS<7:0> + 1) = 3 • TCY = TAD
00000001 = TCY • (ADCS<7:0> + 1) = 2 • TCY = TAD
00000000 = TCY • (ADCS<7:0> + 1) = 1 • TCY = TAD

Note 1: This bit is only used if SSRC<2:0> (AD1CON1<7:5>) = 1.
2: This bit is not used if ADRC (AD1CON3<15>) = 1.

REGISTER 19-4: AD1CHS123: ADC1 INPUT CHANNEL 1, 2, 3 SELECT REGISTER

U-0	U-0	U-0	U-0	U-0	R/W-0	R/W-0	R/W-0
—	—	—	—	—	CH123NB<1:0>		CH123SB
bit 15							bit 8

U-0	U-0	U-0	U-0	U-0	R/W-0	R/W-0	R/W-0
—	—	—	—	—	CH123NA<1:0>		CH123SA
bit 7							bit 0

Legend:			
R = Readable bit	W = Writable bit	U = Unimplemented bit, read as ‘0’	
-n = Value at POR	‘1’ = Bit is set	‘0’ = Bit is cleared	x = Bit is unknown

bit 15-11 **Unimplemented:** Read as ‘0’

bit 10-9 **CH123NB<1:0>:** Channel 1, 2, 3 Negative Input Select for Sample B bits

dsPIC33FJ16(GP/MC)101/102 Devices Only:
11 = Reserved
10 = Reserved
0x = CH1, CH2, CH3 negative input is AVSS

dsPIC33FJ32(GP/MC)101/102 Devices Only:
11 = CH1 negative input is AN9, CH2 negative input is AN10, CH3 negative input is not connected
10 = Reserved
0x = CH1, CH2, CH3 negative input is AVSS

dsPIC33FJ32(GP/MC)104 Devices Only:
11 = CH1 negative input is AN9, CH2 negative input is AN10, CH3 negative input is AN11
10 = CH1 negative input is AN6, CH2 negative input is AN7, CH3 negative input is AN8
0x = CH1, CH2, CH3 negative input is AVSS

bit 8 **CH123SB:** Channel 1, 2, 3 Positive Input Select for Sample B bit

dsPIC33FJXX(GP/MC)101 Devices Only:
1 = CH1 positive input is AN3, CH2 and CH3 positive inputs are not connected
0 = CH1 positive input is AN0, CH2 positive input is AN1, CH3 positive input is AN2

All Other Devices:
1 = CH1 positive input is AN3, CH2 positive input is AN4, CH3 positive input is AN5
0 = CH1 positive input is AN0, CH2 positive input is AN1, CH3 positive input is AN2

bit 7-3 **Unimplemented:** Read as ‘0’

bit 2-1 **CH123NA<1:0>:** Channel 1, 2, 3 Negative Input Select for Sample A bits
Refer to bits<10-9> for the available settings.

bit 0 **CH123SA:** Channel 1, 2, 3 Positive Input Select for Sample A bit
Refer to bit 8 for the available settings.

© 2011-2012 Microchip Technology Inc.

REGISTER 19-5: AD1CHS0: ADC1 INPUT CHANNEL 0 SELECT REGISTER

R/W-0	U-0	U-0	R/W-0	R/W-0	R/W-0	R/W-0	R/W-0
CH0NB	—	—	CH0SB<4:0>				
bit 15							bit 8

R/W-0	U-0	U-0	R/W-0	R/W-0	R/W-0	R/W-0	R/W-0
CH0NA	—	—	CH0SA<4:0>				
bit 7							bit 0

Legend:			
R = Readable bit	W = Writable bit	U = Unimplemented bit, read as ‘0’	
-n = Value at POR	‘1’ = Bit is set	‘0’ = Bit is cleared	x = Bit is unknown

bit 15 **CH0NB:** Channel 0 Negative Input Select for Sample B bit
1 = Channel 0 negative input is AN1
0 = Channel 0 negative input is AVSS

bit 14-13 **Unimplemented:** Read as ‘0’

bit 12-8 **CH0SB<4:0>:** Channel 0 Positive Input Select for Sample B bits
11111-10000 = Reserved; do not use
01111 = Channel 0 positive input is AN15(2)
01110 = No channels connected, all inputs floating (used for CTMU)
01101 = Channel 0 positive input is connected to CTMU temperature sensor
01100 = Channel 0 positive input is AN12(2)
01011 = Channel 0 positive input is AN11(2)
01010 = Channel 0 positive input is AN10(3)
01001 = Channel 0 positive input is AN9(3)
01000 = Channel 0 positive input is AN8(2)
00111 = Channel 0 positive input is AN7(2)
00110 = Channel 0 positive input is AN6(2)
00101 = Channel 0 positive input is AN5(1)
00100 = Channel 0 positive input is AN4(1)
00011 = Channel 0 positive input is AN3
00010 = Channel 0 positive input is AN2
00001 = Channel 0 positive input is AN1
00000 = Channel 0 positive input is AN0

bit 7 **CH0NA:** Channel 0 Negative Input Select for Sample A bit
1 = Channel 0 negative input is AN1
0 = Channel 0 negative input is AVSS

bit 6-5 **Unimplemented:** Read as ‘0’

bit 4-0 **CH0SA<4:0>:** Channel 0 Positive Input Select for Sample A bits
Refer to bits<12-8> for the available settings.

Note 1: This setting is available on all devices, excluding the dsPIC33FJXX(GP/MC)101, where it is reserved.
2: This setting is available in the dsPIC33FJ32(GP/MC)104 devices only and is reserved in all other devices.
3: This setting is available on all devices, excluding the dsPIC33FJ16(GP/MC)101/102, where it is reserved.

REGISTER 19-6: AD1CSSL: ADC1 INPUT SCAN SELECT REGISTER LOW(1,2,3)

R/W-0	U-0	U-0	R/W-0	R/W-0	R/W-0	R/W-0	R/W-0
CSS15(4)	—	—	CSS12(4)	CSS11(4)	CSS10(6)	CSS9(6)	CSS8(4)
bit 15							bit 8

R/W-0	R/W-0	R/W-0	R/W-0	R/W-0	R/W-0	R/W-0	R/W-0
CSS7(4)	CSS6(4)	CSS5(5)	CSS4(5)	CSS3	CSS2	CSS1	CSS0
bit 7							bit 0

Legend:			
R = Readable bit	W = Writable bit	U = Unimplemented bit, read as ‘0’	
-n = Value at POR	‘1’ = Bit is set	‘0’ = Bit is cleared	x = Bit is unknown

bit 15 **CSS15:** ADC Input Scan Selection bit(4)
1 = Selects ANx for input scan
0 = Skips ANx for input scan

bit 14-13 **Unimplemented:** Read as ‘0’

bit 12-0 **CSS<12:0>:** ADC Input Scan Selection bits(4,5,6)
1 = Selects ANx for input scan
0 = Skips ANx for input scan

Note 1: On devices without 14 analog inputs, all AD1CSSL bits can be selected by the user application. However, inputs selected for scan without a corresponding input on the device converts VREFL.

2: CSSx = ANx, where x = 0 through 12 and 15.

3: CTMU temperature sensor input cannot be scanned.

4: The CSS<15,12:11,8:6> bits are available in the dsPIC33FJ32(GP/MC)104 devices only and are reserved in all other devices.

5: The CSS<5:4> bits are available on all devices, excluding the dsPIC33FJXX(GP/MC)101 devices, where they are reserved.

6: The CSS<10:9> bits are available on all devices, excluding the dsPIC33FJ16(GP/MC)101/102 devices, where they are reserved.

© 2011-2012 Microchip Technology Inc.

REGISTER 19-7: AD1PCFGL: ADC1 PORT CONFIGURATION REGISTER LOW(1,2,3)

R/W-0	U-0	U-0	R/W-0	R/W-0	R/W-0	R/W-0	R/W-0
PCFG15(4,5)	—	—	PCFG12(4,5)	PCFG11(4,5)	PCFG10(4,7)	PCFG9(4,7)	PCFG8(4,5)
bit 15							bit 8

R/W-0	R/W-0	R/W-0	R/W-0	R/W-0	R/W-0	R/W-0	R/W-0
PCFG7(4,5)	PCFG6(4,5)	PCFG5(4,6)	PCFG4(4,6)	PCFG3(4)	PCFG2(4)	PCFG1(4)	PCFG0(4)
bit 7							bit 0

Legend:			
R = Readable bit	W = Writable bit	U = Unimplemented bit, read as ‘0’	
-n = Value at POR	‘1’ = Bit is set	‘0’ = Bit is cleared	x = Bit is unknown

bit 15 **PCFG15:** ADC Port Configuration Control bit(4,5)
1 = Port pin is in Digital mode, port read input is enabled, ADC input multiplexer is connected to AVSS
0 = Port pin is in Analog mode, port read input is disabled, ADC samples pin voltage

bit 14-13 **Unimplemented:** Read as ‘0’

bit 12-0 **PCFG<12:0>:** ADC Port Configuration Control bits(4,5,6,7)
1 = Port pin is in Digital mode, port read input is enabled, ADC input multiplexer is connected to AVSS
0 = Port pin is in Analog mode, port read input is disabled, ADC samples pin voltage

Note 1: On devices without 14 analog inputs, all PCFG bits are R/W by user. However, PCFGx bits are ignored on ports without a corresponding input on the device.

2: PCFGx = ANx, where x = 0 through 12, and 15.

3: The PCFGx bits have no effect if the ADC module is disabled by setting the AD1MD bit in the PMD1 register. When the bit is set, all port pins that have been multiplexed with ANx will be in Digital mode.

4: Pins shared with analog functions (i.e., ANx) are analog by default and therefore, must be set by the user to enable any digital function on that pin. Reading any port pin with the analog function enabled will return a ‘0’, regardless of the signal input level.

5: The PCFG<15,12:11,8:6> bits are available in the dsPIC33FJ32(GP/MC)104 devices only and are reserved in all other devices.

6: The PCFG<5:4> bits are available on all devices, excluding the dsPIC33FJXX(GP/MC)101 devices, where they are reserved.

7: The PCFG<10:9> bits are available on all devices, excluding the dsPIC33FJ16(GP/MC)101/102 devices, where they are reserved.

NOTES:

© 2011-2012 Microchip Technology Inc.

20.0 COMPARATOR MODULE

Note 1: This data sheet summarizes the features of the dsPIC33FJ16(GP/MC)101/102 and dsPIC33FJ32(GP/MC)101/102/104 device families. It is not intended to be a comprehensive reference source. To complement the information in this data sheet, refer to **Section 54. "Comparator with Blanking"** (DS70647) of the "*dsPIC33F/PIC24H Family Reference Manual*", which is available from the Microchip web site (www.microchip.com).

2: Some registers and associated bits described in this section may not be available on all devices. Refer to **Section 4.0 "Memory Organization"** in this data sheet for device-specific register and bit information.

The comparator module provides three comparators that can be configured in different ways. As shown in Figure 20-1, individual comparator options are specified by the comparator module's Special Function Register (SFR) control bits.

These options allow users to:

- Select the edge for trigger and interrupt generation
- Select low-power control
- Configure the comparator voltage reference and band gap
- Configure output blanking and masking

The comparator operating mode is determined by the input selections (i.e., whether the input voltage is compared to a second input voltage) to an internal voltage reference.

FIGURE 20-1: COMPARATOR I/O OPERATING MODES

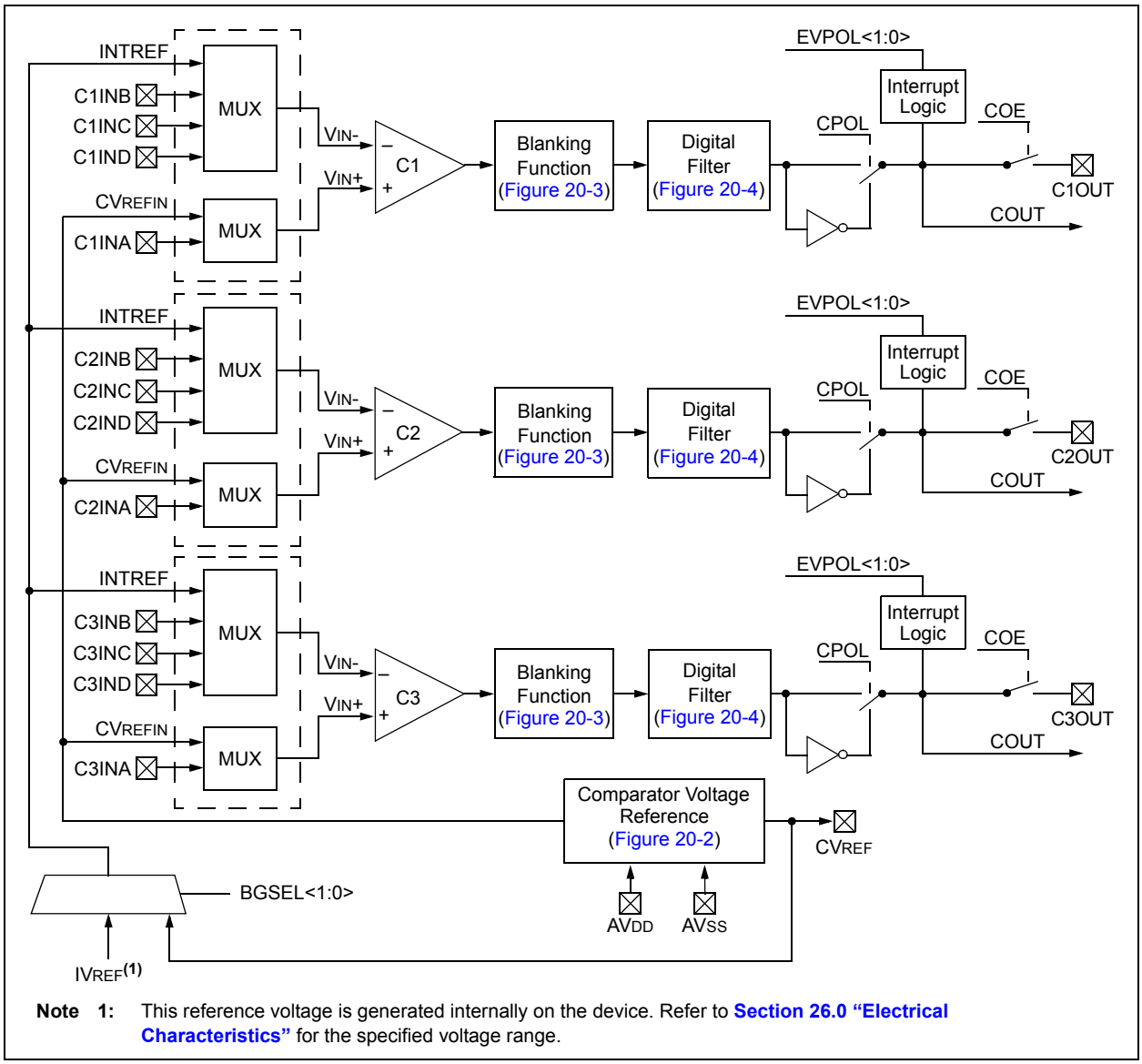

Note 1: This reference voltage is generated internally on the device. Refer to **Section 26.0 "Electrical Characteristics"** for the specified voltage range.

FIGURE 20-2: COMPARATOR VOLTAGE REFERENCE BLOCK DIAGRAM

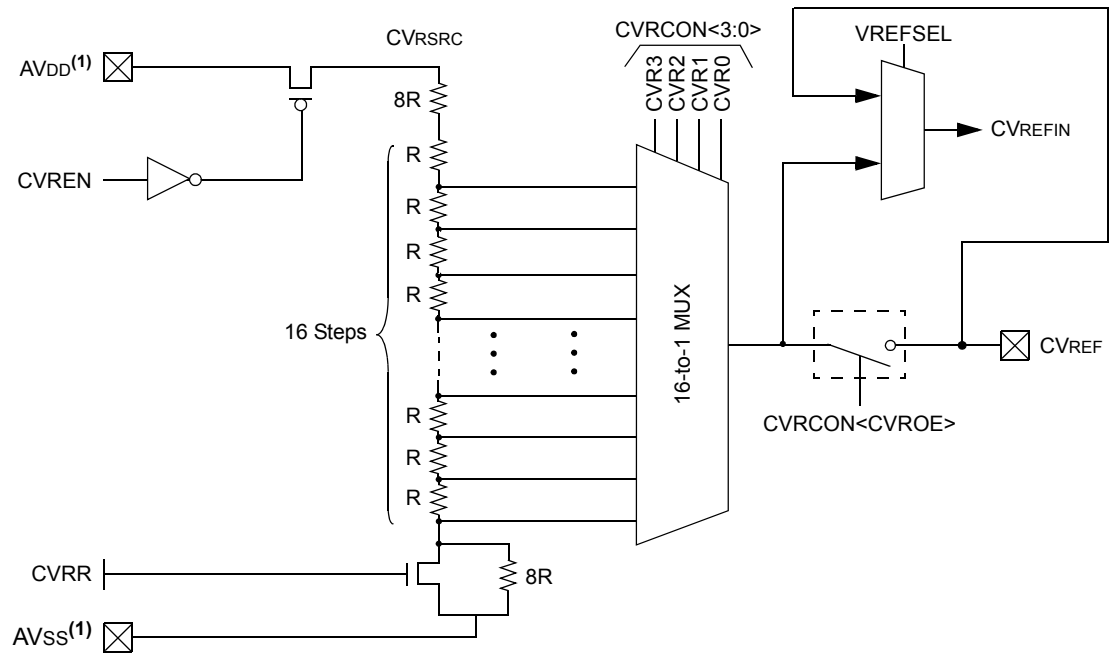

Note 1: This pin is VDD and VSS on devices that have no AVDD or AVSS pins.

FIGURE 20-3: USER-PROGRAMMABLE BLANKING FUNCTION BLOCK DIAGRAM

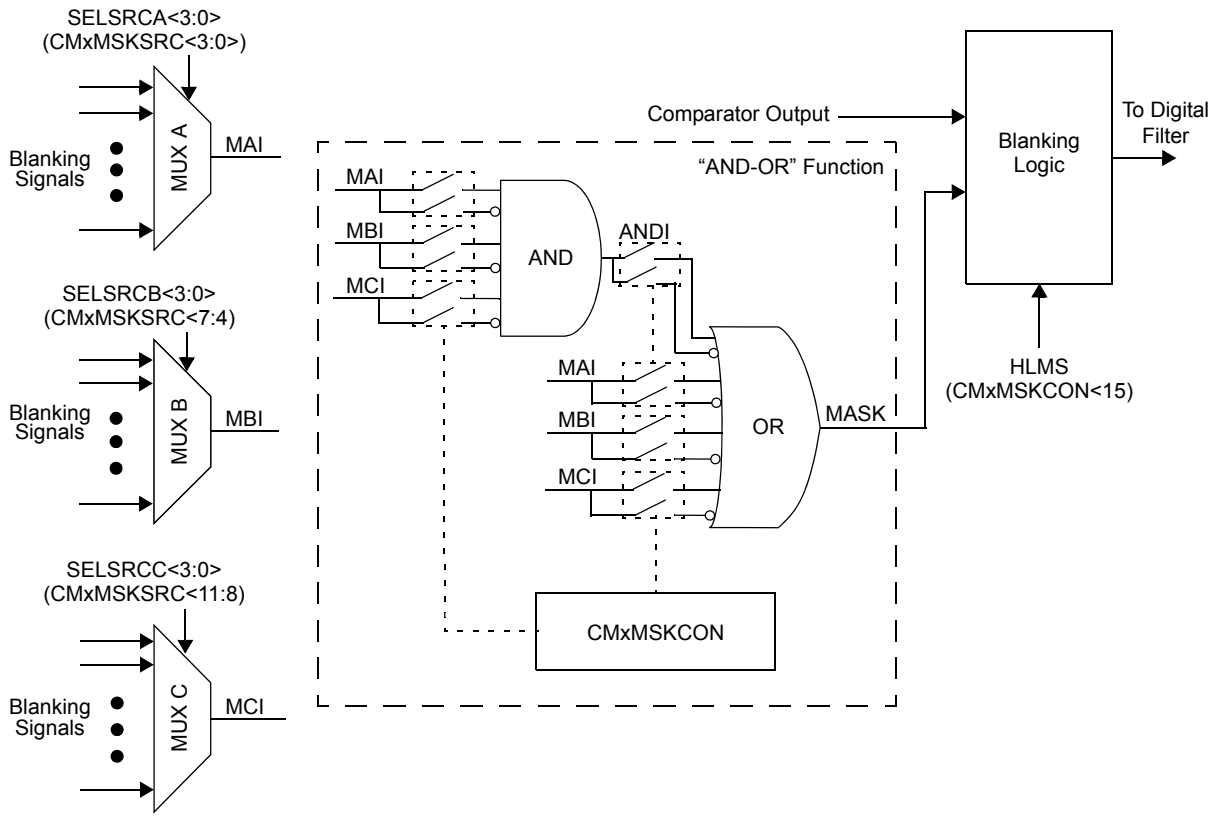

© 2011-2012 Microchip Technology Inc.

FIGURE 20-4: DIGITAL FILTER INTERCONNECT BLOCK DIAGRAM

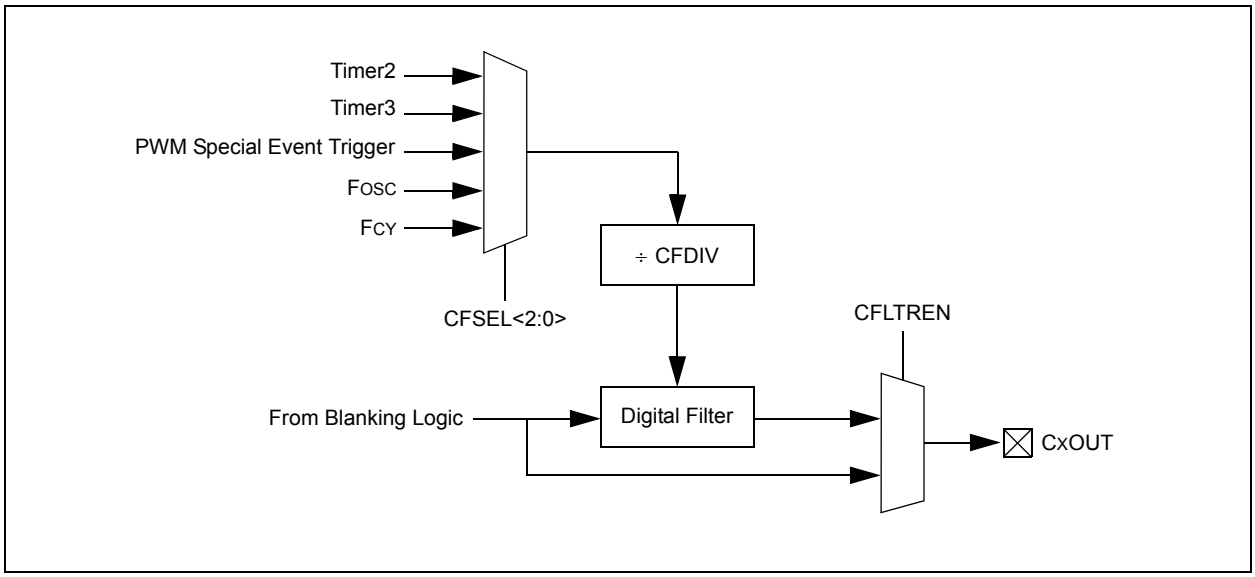

20.1 Comparator Control Registers

REGISTER 20-1: CMSTAT: COMPARATOR STATUS REGISTER

R/W-0	U-0	U-0	U-0	U-0	R-0	R-0	R-0
CMSIDL	—	—	—	—	C3EVT	C2EVT	C1EVT
bit 15							bit 8

U-0	U-0	U-0	U-0	U-0	R-0	R-0	R-0
—	—	—	—	—	C3OUT	C2OUT	C1OUT
bit 7							bit 0

Legend:			
R = Readable bit	W = Writable bit	U = Unimplemented bit, read as ‘0’	
-n = Value at POR	‘1’ = Bit is set	‘0’ = Bit is cleared	x = Bit is unknown

bit 15 **CMSIDL:** Comparator Stop in Idle Mode bit
1 = Discontinues operation of all comparators when device enters Idle mode
0 = Continues operation of all comparators in Idle mode

bit 14-11 **Unimplemented:** Read as ‘0’

bit 10 **C3EVT:** Comparator 3 Event Status bit
1 = Comparator event occurred
0 = Comparator event did not occur

bit 9 **C2EVT:** Comparator 2 Event Status bit
1 = Comparator event occurred
0 = Comparator event did not occur

bit 8 **C1EVT:** Comparator 1 Event Status bit
1 = Comparator event occurred
0 = Comparator event did not occur

bit 7-3 **Unimplemented:** Read as ‘0’

bit 2 **C3OUT:** Comparator 3 Output Status bit
When CPOL = 0:
1 = $V_{IN+} > V_{IN-}$
0 = $V_{IN+} < V_{IN-}$
When CPOL = 1:
1 = $V_{IN+} < V_{IN-}$
0 = $V_{IN+} > V_{IN-}$

bit 1 **C2OUT:** Comparator 2 Output Status bit
When CPOL = 0:
1 = $V_{IN+} > V_{IN-}$
0 = $V_{IN+} < V_{IN-}$
When CPOL = 1:
1 = $V_{IN+} < V_{IN-}$
0 = $V_{IN+} > V_{IN-}$

bit 0 **C1OUT:** Comparator 1 Output Status bit
When CPOL = 0:
1 = $V_{IN+} > V_{IN-}$
0 = $V_{IN+} < V_{IN-}$
When CPOL = 1:
1 = $V_{IN+} < V_{IN-}$
0 = $V_{IN+} > V_{IN-}$

© 2011-2012 Microchip Technology Inc.

REGISTER 20-2: CMxCON: COMPARATOR x CONTROL REGISTER

R/W-0	R/W-0	R/W-0	U-0	U-0	U-0	R/W-0	R/W-0
CON	COE	CPOL	—	—	—	CEVT	COUT
bit 15							bit 8

R/W-0	R/W-0	U-0	R/W-0	U-0	U-0	R/W-0	R/W-0
EVPOL<1:0>		—	CREF	—	—	CCH<1:0>	
bit 7							bit 0

Legend:			
R = Readable bit	W = Writable bit	U = Unimplemented bit, read as ‘0’	
-n = Value at POR	‘1’ = Bit is set	‘0’ = Bit is cleared	x = Bit is unknown

bit 15 **CON:** Comparator Enable bit
1 = Comparator is enabled
0 = Comparator is disabled

bit 14 **COE:** Comparator Output Enable bit
1 = Comparator output is present on the CxOUT pin
0 = Comparator output is internal only

bit 13 **CPOL:** Comparator Output Polarity Select bit
1 = Comparator output is inverted
0 = Comparator output is not inverted

bit 12-10 **Unimplemented:** Read as ‘0’

bit 9 **CEVT:** Comparator Event bit
1 = Comparator event according to EVPOL<1:0> settings occurred; disables future triggers and interrupts until the bit is cleared
0 = Comparator event did not occur

bit 8 **COUT:** Comparator Output bit
When CPOL = 0 (non-inverted polarity):
1 = $V_{IN+} > V_{IN-}$
0 = $V_{IN+} < V_{IN-}$
When CPOL = 1 (inverted polarity):
1 = $V_{IN+} < V_{IN-}$
0 = $V_{IN+} > V_{IN-}$

bit 7-6 **EVPOL<1:0>:** Trigger/Event/Interrupt Polarity Select bits
11 = Trigger/event/interrupt is generated on any change of the comparator output (while CEVT = 0)
10 = Trigger/event/interrupt is generated only on high-to-low transition of the polarity selected comparator output (while CEVT = 0)
If CPOL = 1 (inverted polarity):
Low-to-high transition of the comparator output.
If CPOL = 0 (non-inverted polarity):
High-to-low transition of the comparator output.
01 = Trigger/event/interrupt is generated only on low-to-high transition of the polarity-selected comparator output (while CEVT = 0)
If CPOL = 1 (inverted polarity):
High-to-low transition of the comparator output.
If CPOL = 0 (non-inverted polarity):
Low-to-high transition of the comparator output.
00 = Trigger/event/interrupt generation is disabled

bit 5 **Unimplemented:** Read as ‘0’

REGISTER 20-2: CMxCON: COMPARATOR x CONTROL REGISTER (CONTINUED)

bit 4	**CREF:** Comparator Reference Select bit (V_{IN+} input) 1 = V_{IN+} input connects to internal CV_{REFIN} voltage 0 = V_{IN+} input connects to CxINA pin
bit 3-2	**Unimplemented:** Read as '0'
bit 1-0	**CCH<1:0>:** Comparator Channel Select bits 11 = V_{IN-} input of comparator connects to INTREF 10 = V_{IN-} input of comparator connects to CxIND pin 01 = V_{IN-} input of comparator connects to CxINC pin 00 = V_{IN-} input of comparator connects to CxINB pin

© 2011-2012 Microchip Technology Inc.

REGISTER 20-3: CMxMSKSRC: COMPARATOR x MASK SOURCE SELECT REGISTER

U-0	U-0	U-0	U-0	R/W-0	R/W-0	R/W-0	RW-0
—	—	—	—	SELSRCC<3:0>			
bit 15							bit 8

R/W-0	R/W-0	R/W-0	R/W-0	R/W-0	R/W-0	R/W-0	R/W-0
SELSRCB<3:0>				SELSRCA<3:0>			
bit 7							bit 0

Legend:			
R = Readable bit	W = Writable bit	U = Unimplemented bit, read as ‘0’	
-n = Value at POR	‘1’ = Bit is set	‘0’ = Bit is cleared	x = Bit is unknown

bit 15-12 **Unimplemented:** Read as ‘0’

bit 11-8 **SELSRCC<3:0>:** Mask C Input Select bits

1111 = Reserved
1110 = Reserved
1101 = Reserved
1100 = Reserved
1011 = Reserved
1010 = Reserved
1001 = Reserved
1000 = Reserved
0111 = Reserved
0110 = Reserved
0101 = PWM1H3
0100 = PWM1L3
0011 = PWM1H2
0010 = PWM1L2
0001 = PWM1H1
0000 = PWM1L1

bit 7-4 **SELSRCB<3:0>:** Mask B Input Select bits

1111 = Reserved
1110 = Reserved
1101 = Reserved
1100 = Reserved
1011 = Reserved
1010 = Reserved
1001 = Reserved
1000 = Reserved
0111 = Reserved
0110 = Reserved
0101 = PWM1H3
0100 = PWM1L3
0011 = PWM1H2
0010 = PWM1L2
0001 = PWM1H1
0000 = PWM1L1

REGISTER 20-3: CMxMSKSRC: COMPARATOR x MASK SOURCE SELECT REGISTER (CONTINUED)

bit 3-0 **SELSRCA<3:0>:** Mask A Input Select bits

1111 = Reserved
1110 = Reserved
1101 = Reserved
1100 = Reserved
1011 = Reserved
1010 = Reserved
1001 = Reserved
1000 = Reserved
0111 = Reserved
0110 = Reserved
0101 = PWM1H3
0100 = PWM1L3
0011 = PWM1H2
0010 = PWM1L2
0001 = PWM1H1
0000 = PWM1L1

© 2011-2012 Microchip Technology Inc.

REGISTER 20-4: CMxMSKCON: COMPARATOR x MASK GATING CONTROL REGISTER

R/W-0	U-0	R/W-0	R/W-0	R/W-0	R/W-0	R/W-0	R/W-0
HLMS	—	OCEN	OCNEN	OBEN	OBNEN	OAEN	OANEN
bit 15							bit 8

R/W-0	R/W-0	R/W-0	R/W-0	R/W-0	R/W-0	R/W-0	R/W-0
NAGS	PAGS	ACEN	ACNEN	ABEN	ABNEN	AAEN	AANEN
bit 7							bit 0

Legend:			
R = Readable bit	W = Writable bit	U = Unimplemented bit, read as ‘0’	
-n = Value at POR	‘1’ = Bit is set	‘0’ = Bit is cleared	x = Bit is unknown

bit 15 **HLMS:** High or Low Level Masking Select bits
1 = The masking (blanking) function will prevent any asserted (‘0’) comparator signal from propagating
0 = The masking (blanking) function will prevent any asserted (‘1’) comparator signal from propagating

bit 14 **Unimplemented:** Read as ‘0’

bit 13 **OCEN:** OR Gate C Input Inverted Enable bit
1 = MCI is connected to OR gate
0 = MCI is not connected to OR gate

bit 12 **OCNEN:** OR Gate C Input Inverted Enable bit
1 = Inverted MCI is connected to OR gate
0 = Inverted MCI is not connected to OR gate

bit 11 **OBEN:** OR Gate B Input Inverted Enable bit
1 = MBI is connected to OR gate
0 = MBI is not connected to OR gate

bit 10 **OBNEN:** OR Gate B Input Inverted Enable bit
1 = Inverted MBI is connected to OR gate
0 = Inverted MBI is not connected to OR gate

bit 9 **OAEN:** OR Gate A Input Enable bit
1 = MAI is connected to OR gate
0 = MAI is not connected to OR gate

bit 8 **OANEN:** OR Gate A Input Inverted Enable bit
1 = Inverted MAI is connected to OR gate
0 = Inverted MAI is not connected to OR gate

bit 7 **NAGS:** Negative AND Gate Output Select
1 = Inverted ANDI is connected to OR gate
0 = Inverted ANDI is not connected to OR gate

bit 6 **PAGS:** Positive AND Gate Output Select
1 = ANDI is connected to OR gate
0 = ANDI is not connected to OR gate

bit 5 **ACEN:** AND Gate A1 C Input Inverted Enable bit
1 = MCI is connected to AND gate
0 = MCI is not connected to AND gate

bit 4 **ACNEN:** AND Gate A1 C Input Inverted Enable bit
1 = Inverted MCI is connected to AND gate
0 = Inverted MCI is not connected to AND gate

REGISTER 20-4: CMxMSKCON: COMPARATOR x MASK GATING CONTROL REGISTER (CONTINUED)

bit 3 **ABEN:** AND Gate A1 B Input Inverted Enable bit
1 = MBI is connected to AND gate
0 = MBI is not connected to AND gate

bit 2 **ABNEN:** AND Gate A1 B Input Inverted Enable bit
1 = Inverted MBI is connected to AND gate
0 = Inverted MBI is not connected to AND gate

bit 1 **AAEN:** AND Gate A1 A Input Enable bit
1 = MAI is connected to AND gate
0 = MAI is not connected to AND gate

bit 0 **AANEN:** AND Gate A1 A Input Inverted Enable bit
1 = Inverted MAI is connected to AND gate
0 = Inverted MAI is not connected to AND gate

© 2011-2012 Microchip Technology Inc.

REGISTER 20-5: CMxFLTR: COMPARATOR x FILTER CONTROL REGISTER

U-0	U-0	U-0	U-0	U-0	U-0	U-0	U-0
—	—	—	—	—	—	—	—
bit 15							bit 8

U-0	R/W-0	R/W-0	R/W-0	R/W-0	R/W-0	R/W-0	R/W-0
—	CFSEL<2:0>			CFLTREN	CFDIV<2:0>		
bit 7							bit 0

Legend:			
R = Readable bit	W = Writable bit	U = Unimplemented bit, read as ‘0’	
-n = Value at POR	‘1’ = Bit is set	‘0’ = Bit is cleared	x = Bit is unknown

bit 15-7 **Unimplemented:** Read as ‘0’

bit 6-4 **CFSEL<2:0>:** Comparator Filter Input Clock Select bits
111 = Reserved
110 = Reserved
101 = Timer3
100 = Timer2
011 = Reserved
010 = PWM Special Event Trigger
001 = FOSC
000 = FCY

bit 3 **CFLTREN:** Comparator Filter Enable bit
1 = Digital filter is enabled
0 = Digital filter is disabled

bit 2-0 **CFDIV<2:0>:** Comparator Filter Clock Divide Select bits
111 = Clock Divide 1:128
110 = Clock Divide 1:64
101 = Clock Divide 1:32
100 = Clock Divide 1:16
011 = Clock Divide 1:8
010 = Clock Divide 1:4
001 = Clock Divide 1:2
000 = Clock Divide 1:1

REGISTER 20-6: CVRCON: COMPARATOR VOLTAGE REFERENCE CONTROL REGISTER

U-0	U-0	U-0	U-0	U-0	R/W-0	R/W-0	R/W-0
—	—	—	—	—	VREFSEL	BGSEL<1:0>	
bit 15							bit 8

R/W-0	R/W-0	R/W-0	U-0	R/W-0	R/W-0	R/W-0	R/W-0
CVREN	CVROE(1)	CVRR	—	CVR<3:0>			
bit 7							bit 0

Legend:			
R = Readable bit	W = Writable bit	U = Unimplemented bit, read as ‘0’	
-n = Value at POR	‘1’ = Bit is set	‘0’ = Bit is cleared	x = Bit is unknown

bit 15-11 **Unimplemented:** Read as ‘0’

bit 10 **VREFSEL:** Voltage Reference Select bit
1 = CVREFIN = CVREF pin
0 = CVREFIN is generated by the resistor network

bit 9-8 **BGSEL<1:0>:** Band Gap Reference Source Select bits
11 = INTREF = CVREF pin
10 = INTREF = 1.2V (nominal)(2)
0x = Reserved

bit 7 **CVREN:** Comparator Voltage Reference Enable bit
1 = Comparator voltage reference circuit is powered on
0 = Comparator voltage reference circuit is powered down

bit 6 **CVROE:** Comparator Voltage Reference Output Enable bit(1)
1 = Voltage level is output on CVREF pin
0 = Voltage level is disconnected from CVREF pin

bit 5 **CVRR:** Comparator Voltage Reference Range Selection bit
1 = CVRSRC/24 step-size
0 = CVRSRC/32 step-size

bit 4 **Unimplemented:** Read as ‘0’

bit 3-0 **CVR<3:0>:** Comparator Voltage Reference Value Selection 0 ≤ CVR<3:0> ≤ 15 bits
When CVRR = 1:
CVREFIN = (CVR<3:0>/24) • (CVRSRC)
When CVRR = 0:
CVREFIN = 1/4 • (CVRSRC) + (CVR<3:0>/32) • (CVRSRC)

Note 1: CVROE overrides the TRIS bit setting.
2: This reference voltage is generated internally on the device. Refer to **Section 26.0 “Electrical Characteristics”** for the specified voltage range.

© 2011-2012 Microchip Technology Inc.

21.0 REAL-TIME CLOCK AND CALENDAR (RTCC)

Note 1: This data sheet summarizes the features of the dsPIC33FJ16(GP/MC)101/102 and dsPIC33FJ32(GP/MC)101/102/104 device families of devices. It is not intended to be a comprehensive reference source. To complement the information in this data sheet, refer to **Section 37. "Real-Time Clock and Calendar (RTCC)"** (DS70310) in the "*dsPIC33F/PIC24H Family Reference Manual*", which is available on the Microchip web site (www.microchip.com).

2: Some registers and associated bits described in this section may not be available on all devices. Refer to **Section 4.0 "Memory Organization"** in this data sheet for device-specific register and bit information.

This chapter discusses the Real-Time Clock and Calendar (RTCC) module, available on dsPIC33FJ16(GP/MC)101/102 and dsPIC33FJ32(GP/MC)101/102/104 devices, and its operation.

Some of the key features of the RTCC module are:

- Time: hours, minutes and seconds
- 24-hour format (military time)
- Calendar: weekday, date, month and year
- Alarm configurable
- Year range: 2000 to 2099
- Leap year correction
- BCD format for compact firmware
- Optimized for low-power operation
- User calibration with auto-adjust
- Calibration range: ±2.64 seconds error per month
- Requirements: external 32.768 kHz clock crystal
- Alarm pulse or seconds clock output on RTCC pin

The RTCC module is intended for applications where accurate time must be maintained for extended periods of time with minimum to no intervention from the CPU. The RTCC module is optimized for low-power usage to provide extended battery lifetime while keeping track of time.

The RTCC module is a 100-year clock and calendar with automatic leap year detection. The range of the clock is from 00:00:00 (midnight) on January 1, 2000 to 23:59:59 on December 31, 2099.

The hours are available in 24-hour (military time) format. The clock provides a granularity of one second with half-second visibility to the user.

FIGURE 21-1: RTCC BLOCK DIAGRAM

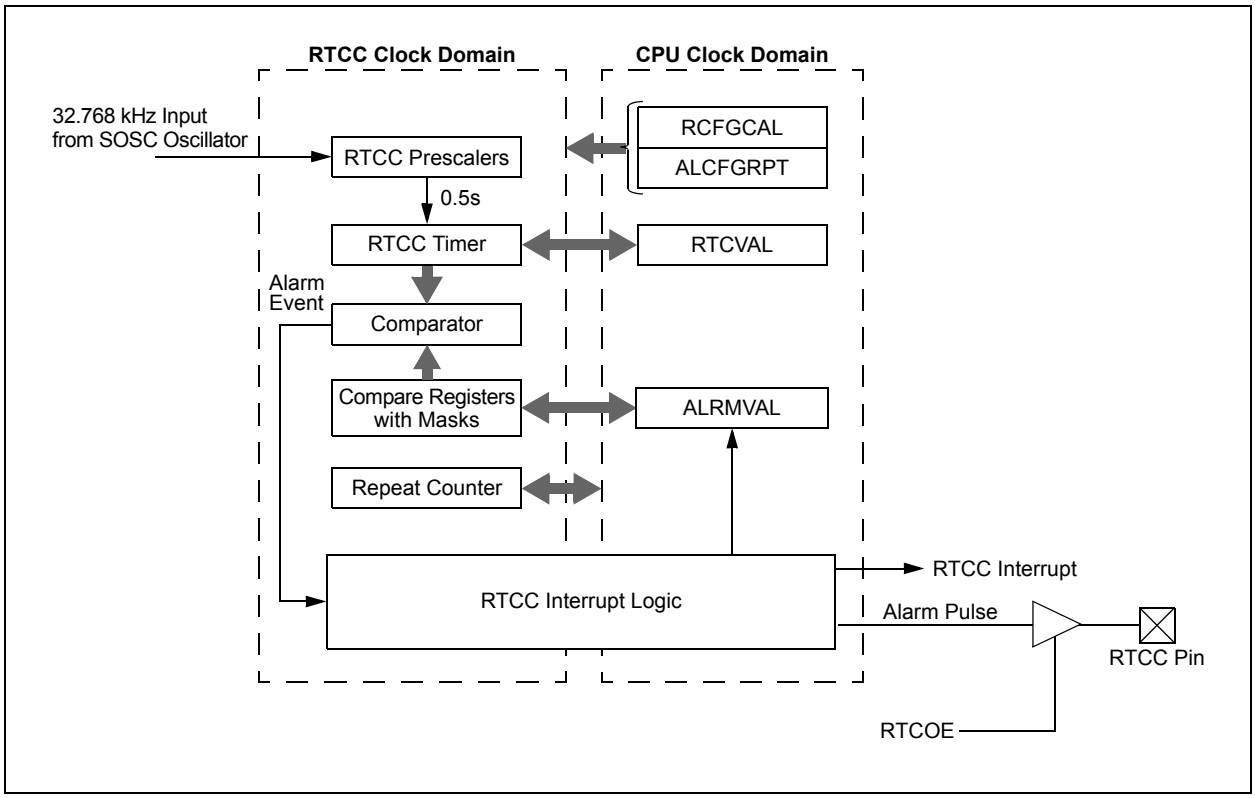

21.1 RTCC Module Registers

The RTCC module registers are organized into three categories:

- RTCC Control Registers
- RTCC Value Registers
- Alarm Value Registers

21.1.1 REGISTER MAPPING

To limit the register interface, the RTCC Timer and Alarm Time registers are accessed through corresponding register pointers. The RTCC Value register window (RTCVALH and RTCVALL) uses the RTCPTR bits (RCFGCAL<9:8>) to select the desired Timer register pair (see Table 21-1).

By writing the RTCVALH byte, the RTCC Pointer value (RTCPTR<1:0> bits) decrements by one until it reaches '00'. Once it reaches '00', the MINUTES and SECONDS value will be accessible through RTCVALH and RTCVALL until the pointer value is manually changed.

TABLE 21-1: RTCVAL REGISTER MAPPING

RTCPTR <1:0>	RTCC Value Register Window	
	RTCVAL<15:8>	RTCVAL<7:0>
00	MINUTES	SECONDS
01	WEEKDAY	HOURS
10	MONTH	DAY
11	—	YEAR

The Alarm Value register window (ALRMVALH and ALRMVALL) uses the ALRMPTR bits (ALCFGRPT<9:8>) to select the desired Alarm register pair (see Table 21-2).

By writing the ALRMVALH byte, the Alarm Pointer value (ALRMPTR<1:0> bits) decrements by one until it reaches '00'. Once it reaches '00', the ALRMMIN and ALRMSEC value will be accessible through ALRMVALH and ALRMVALL until the pointer value is manually changed.

TABLE 21-2: ALRMVAL REGISTER MAPPING

ALRMPTR <1:0>	Alarm Value Register Window	
	ALRMVAL<15:8>	ALRMVAL<7:0>
00	ALRMMIN	ALRMSEC
01	ALRMWD	ALRMHR
10	ALRMMNTH	ALRMDAY
11	—	—

Considering that the 16-bit core does not distinguish between 8-bit and 16-bit read operations, the user must be aware that when reading either the ALRMVALH or ALRMVALL, bytes will decrement the ALRMPTR<1:0> value. The same applies to the RTCVALH or RTCVALL bytes with the RTCPTR<1:0> being decremented.

Note: This only applies to read operations and not write operations.

21.1.2 WRITE LOCK

In order to perform a write to any of the RTCC Timer registers, the RTCWREN bit (RCFGCAL<13>) must be set (refer to Example 21-1).

Note: To avoid accidental writes to the timer, it is recommended that the RTCWREN bit (RCFGCAL<13>) is kept clear at any other time. For the RTCWREN bit to be set, there is only 1 instruction cycle time window allowed between the 55h/AA sequence and the setting of RTCWREN; therefore, it is recommended that code follow the procedure in Example 21-1.

EXAMPLE 21-1: SETTING THE RTCWREN BIT

```
MOV     #NVMKEY, W1         ;move the address of NVMKEY into W1
MOV     #0x55, W2
MOV     #0xAA, W3
MOV     W2, [W1]            ;start 55/AA sequence
MOV     W3, [W1]
BSET    RCFGCAL, #13        ;set the RTCWREN bit
```


© 2011-2012 Microchip Technology Inc.

21.2 RTCC Control Registers

REGISTER 21-1: RCFGCAL: RTCC CALIBRATION AND CONFIGURATION REGISTER(1)

R/W-0	U-0	R/W-0	R-0	R-0	R/W-0	R/W-0	R/W-0
RTCEN(2)	—	RTCWREN	RTCSYNC	HALFSEC(3)	RTCOE	RTCPTR<1:0>	
bit 15							bit 8

R/W-0	R/W-0	R/W-0	R/W-0	R/W-0	R/W-0	R/W-0	R/W-0
CAL<7:0>							
bit 7							bit 0

Legend:			
R = Readable bit	W = Writable bit	U = Unimplemented bit, read as ‘0’	
-n = Value at POR	‘1’ = Bit is set	‘0’ = Bit is cleared	x = Bit is unknown

bit 15 **RTCEN:** RTCC Enable bit(2)
1 = RTCC module is enabled
0 = RTCC module is disabled

bit 14 **Unimplemented:** Read as ‘0’

bit 13 **RTCWREN:** RTCC Value Registers Write Enable bit
1 = RTCVALH and RTCVALL registers can be written to by the user
0 = RTCVALH and RTCVALL registers are locked out from being written to by the user

bit 12 **RTCSYNC:** RTCC Value Registers Read Synchronization bit
1 = RTCVALH, RTCVALL and ALCFGRPT registers can change while reading, due to a rollover ripple, resulting in an invalid data read. If the register is read twice and the results are the same data, the data can be assumed to be valid.
0 = RTCVALH, RTCVALL or ALCFGRPT registers can be read without concern over a rollover ripple

bit 11 **HALFSEC:** Half-Second Status bit(3)
1 = Second half period of a second
0 = First half period of a second

bit 10 **RTCOE:** RTCC Output Enable bit
1 = RTCC output is enabled
0 = RTCC output is disabled

bit 9-8 **RTCPTR<1:0>:** RTCC Value Register Window Pointer bits
Points to the corresponding RTCC Value registers when reading RTCVALH and RTCVALL registers; the RTCPTR<1:0> value decrements on every read or write of RTCVALH until it reaches ‘00’.

RTCVAL<15:8>:
00 = MINUTES
01 = WEEKDAY
10 = MONTH
11 = Reserved

RTCVAL<7:0>:
00 = SECONDS
01 = HOURS
10 = DAY
11 = YEAR

Note 1: The RCFGCAL register is only affected by a POR.
2: A write to the RTCEN bit is only allowed when RTCWREN = 1.
3: This bit is read-only; it is cleared to ‘0’ on a write to the lower half of the MINSEC register.

REGISTER 21-1: RCFGCAL: RTCC CALIBRATION AND CONFIGURATION REGISTER(1) (CONTINUED)

bit 7-0 **CAL<7:0>:** RTC Drift Calibration bits

`01111111` = Maximum positive adjustment; adds 508 RTC clock pulses every one minute

•

•

•

`00000001` = Minimum positive adjustment; adds 4 RTC clock pulses every one minute

`00000000` = No adjustment

`11111111` = Minimum negative adjustment; subtracts 4 RTC clock pulses every one minute

•

•

•

`10000000` = Maximum negative adjustment; subtracts 512 RTC clock pulses every one minute

Note 1: The RCFGCAL register is only affected by a POR.

2: A write to the RTCEN bit is only allowed when RTCWREN = `1`.

3: This bit is read-only; it is cleared to ‘`0`’ on a write to the lower half of the MINSEC register.

© 2011-2012 Microchip Technology Inc.

REGISTER 21-2: PADCFG1: PAD CONFIGURATION CONTROL REGISTER

U-0	U-0	U-0	U-0	U-0	U-0	U-0	U-0
—	—	—	—	—	—	—	—
bit 15							bit 8

U-0	U-0	U-0	U-0	U-0	U-0	R/W-0	U-0
—	—	—	—	—	—	RTSECSEL(1)	—
bit 7							bit 0

Legend:			
R = Readable bit	W = Writable bit	U = Unimplemented bit, read as ‘0’	
-n = Value at POR	‘1’ = Bit is set	‘0’ = Bit is cleared	x = Bit is unknown

bit 15-2 **Unimplemented:** Read as ‘0’

bit 1 **RTSECSEL:** RTCC Seconds Clock Output Select bit(1)
1 = RTCC seconds clock is selected for the RTCC pin
0 = RTCC alarm pulse is selected for the RTCC pin

bit 0 **Unimplemented:** Read as ‘0’

Note 1: To enable the actual RTCC output, the RTCOE (RCFGCAL) bit needs to be set.

REGISTER 21-3: ALCFGRPT: ALARM CONFIGURATION REGISTER

R/W-0	R/W-0	R/W-0	R/W-0	R/W-0	R/W-0	R/W-0	R/W-0
ALRMEN	CHIME	AMASK<3:0>				ALRMPTR<1:0>	
bit 15							bit 8

R/W-0	R/W-0	R/W-0	R/W-0	R/W-0	R/W-0	R/W-0	R/W-0
ARPT<7:0>							
bit 7							bit 0

Legend:			
R = Readable bit	W = Writable bit	U = Unimplemented bit, read as ‘0’	
-n = Value at POR	‘1’ = Bit is set	‘0’ = Bit is cleared	x = Bit is unknown

bit 15 **ALRMEN:** Alarm Enable bit

1 = Alarm is enabled (cleared automatically after an alarm event whenever ARPT<7:0> = 0x00 and CHIME = 0)
0 = Alarm is disabled

bit 14 **CHIME:** Chime Enable bit

1 = Chime is enabled; ARPT<7:0> bits are allowed to roll over from 0x00 to 0xFF
0 = Chime is disabled; ARPT<7:0> bits stop once they reach 0x00

bit 13-10 **AMASK<3:0>:** Alarm Mask Configuration bits

0000 = Every half second
0001 = Every second
0010 = Every 10 seconds
0011 = Every minute
0100 = Every 10 minutes
0101 = Every hour
0110 = Once a day
0111 = Once a week
1000 = Once a month
1001 = Once a year (except when configured for February 29th, once every 4 years)
101x = Reserved – do not use
11xx = Reserved – do not use

bit 9-8 **ALRMPTR<1:0>:** Alarm Value Register Window Pointer bits

Points to the corresponding Alarm Value registers when reading ALRMVALH and ALRMVALL registers; the ALRMPTR<1:0> value decrements on every read or write of ALRMVALH until it reaches ‘00’.

ALRMVAL<15:8>:
00 = ALRMMIN
01 = ALRMWD
10 = ALRMMNTH
11 = Unimplemented

ALRMVAL<7:0>:
00 = ALRMSEC
01 = ALRMHR
10 = ALRMDAY
11 = Unimplemented

bit 7-0 **ARPT<7:0>:** Alarm Repeat Counter Value bits

11111111 = Alarm will repeat 255 more times
•
•
•
00000000 = Alarm will not repeat

The counter decrements on any alarm event. The counter is prevented from rolling over from 0x00 to 0xFF unless CHIME = 1.

© 2011-2012 Microchip Technology Inc.

REGISTER 21-4: RTCVAL (WHEN RTCPTR<1:0> = 11): YEAR VALUE REGISTER[1]

U-0	U-0	U-0	U-0	U-0	U-0	U-0	U-0
—	—	—	—	—	—	—	—
bit 15							bit 8

R/W-x	R/W-x	R/W-x	R/W-x	R/W-x	R/W-x	R/W-x	R/W-x
YRTEN<3:0>				YRONE<3:0>			
bit 7							bit 0

Legend:			
R = Readable bit	W = Writable bit	U = Unimplemented bit, read as ‘0’	
-n = Value at POR	‘1’ = Bit is set	‘0’ = Bit is cleared	x = Bit is unknown

bit 15-8 **Unimplemented:** Read as ‘0’

bit 7-4 **YRTEN<3:0>:** Binary Coded Decimal Value of Year’s Tens Digit bits
Contains a value from 0 to 9.

bit 3-0 **YRONE<3:0>:** Binary Coded Decimal Value of Year’s Ones Digit bits
Contains a value from 0 to 9.

Note 1: A write to this register is only allowed when RTCWREN = 1.

REGISTER 21-5: RTCVAL (WHEN RTCPTR<1:0> = 10): MONTH AND DAY VALUE REGISTER[1]

U-0	U-0	U-0	R-x	R-x	R-x	R-x	R-x
—	—	—	MTHTEN0	MTHONE<3:0>			
bit 15							bit 8

U-0	U-0	R/W-x	R/W-x	R/W-x	R/W-x	R/W-x	R/W-x
—	—	DAYTEN<1:0>		DAYONE<3:0>			
bit 7							bit 0

Legend:			
R = Readable bit	W = Writable bit	U = Unimplemented bit, read as ‘0’	
-n = Value at POR	‘1’ = Bit is set	‘0’ = Bit is cleared	x = Bit is unknown

bit 15-13 **Unimplemented:** Read as ‘0’

bit 12 **MTHTEN0:** Binary Coded Decimal Value of Month’s Tens Digit bit
Contains a value of 0 or 1.

bit 11-8 **MTHONE<3:0>:** Binary Coded Decimal Value of Month’s Ones Digit bits
Contains a value from 0 to 9.

bit 7-6 **Unimplemented:** Read as ‘0’

bit 5-4 **DAYTEN<1:0>:** Binary Coded Decimal Value of Day’s Tens Digit bits
Contains a value from 0 to 3.

bit 3-0 **DAYONE<3:0>:** Binary Coded Decimal Value of Day’s Ones Digit bits
Contains a value from 0 to 9.

Note 1: A write to this register is only allowed when RTCWREN = 1.

REGISTER 21-6: RTCVAL (WHEN RTCPTR<1:0> = 01): WEEKDAY AND HOURS VALUE REGISTER(1)

U-0	U-0	U-0	U-0	U-0	R/W-x	R/W-x	R/W-x
—	—	—	—	—	WDAY<2:0>		
bit 15							bit 8

U-0	U-0	R/W-x	R/W-x	R/W-x	R/W-x	R/W-x	R/W-x
—	—	HRTEN<1:0>		HRONE<3:0>			
bit 7							bit 0

Legend:			
R = Readable bit	W = Writable bit	U = Unimplemented bit, read as ‘0’	
-n = Value at POR	‘1’ = Bit is set	‘0’ = Bit is cleared	x = Bit is unknown

bit 15-11 **Unimplemented:** Read as ‘0’

bit 10-8 **WDAY<2:0>:** Binary Coded Decimal Value of Weekday Digit bits
Contains a value from 0 to 6.

bit 7-6 **Unimplemented:** Read as ‘0’

bit 5-4 **HRTEN<1:0>:** Binary Coded Decimal Value of Hour’s Tens Digit bits
Contains a value from 0 to 2.

bit 3-0 **HRONE<3:0>:** Binary Coded Decimal Value of Hour’s Ones Digit bits
Contains a value from 0 to 9.

Note 1: A write to this register is only allowed when RTCWREN = 1.

© 2011-2012 Microchip Technology Inc.

REGISTER 21-7: RTCVAL (WHEN RTCPTR<1:0> = 00): MINUTES AND SECONDS VALUE REGISTER

U-0	R/W-x	R/W-x	R/W-x	R/W-x	R/W-x	R/W-x	R/W-x
—	MINTEN<2:0>			MINONE<3:0>			
bit 15							bit 8

U-0	R/W-x	R/W-x	R/W-x	R/W-x	R/W-x	R/W-x	R/W-x
—	SECTEN<2:0>			SECONE<3:0>			
bit 7							bit 0

Legend:			
R = Readable bit	W = Writable bit	U = Unimplemented bit, read as ‘0’	
-n = Value at POR	‘1’ = Bit is set	‘0’ = Bit is cleared	x = Bit is unknown

bit 15 **Unimplemented:** Read as ‘0’

bit 14-12 **MINTEN<2:0>:** Binary Coded Decimal Value of Minute’s Tens Digit bits
Contains a value from 0 to 5.

bit 11-8 **MINONE<3:0>:** Binary Coded Decimal Value of Minute’s Ones Digit bits
Contains a value from 0 to 9.

bit 7 **Unimplemented:** Read as ‘0’

bit 6-4 **SECTEN<2:0>:** Binary Coded Decimal Value of Second’s Tens Digit bits
Contains a value from 0 to 5.

bit 3-0 **SECONE<3:0>:** Binary Coded Decimal Value of Second’s Ones Digit bits
Contains a value from 0 to 9.

REGISTER 21-8: ALRMVAL (WHEN ALRMPTR<1:0> = 10): ALARM MONTH AND DAY VALUE REGISTER(1)

U-0	U-0	U-0	R/W-x	R/W-x	R/W-x	R/W-x	R/W-x
—	—	—	MTHTEN0	MTHONE<3:0>			
bit 15							bit 8

U-0	U-0	R/W-x	R/W-x	R/W-x	R/W-x	R/W-x	R/W-x
—	—	DAYTEN<1:0>		DAYONE<3:0>			
bit 7							bit 0

Legend:			
R = Readable bit	W = Writable bit	U = Unimplemented bit, read as ‘0’	
-n = Value at POR	‘1’ = Bit is set	‘0’ = Bit is cleared	x = Bit is unknown

bit 15-13 **Unimplemented:** Read as ‘0’

bit 12 **MTHTEN0:** Binary Coded Decimal Value of Month’s Tens Digit bit
Contains a value of 0 or 1.

bit 11-8 **MTHONE<3:0>:** Binary Coded Decimal Value of Month’s Ones Digit bits
Contains a value from 0 to 9.

bit 7-6 **Unimplemented:** Read as ‘0’

bit 5-4 **DAYTEN<1:0>:** Binary Coded Decimal Value of Day’s Tens Digit bits
Contains a value from 0 to 3.

bit 3-0 **DAYONE<3:0>:** Binary Coded Decimal Value of Day’s Ones Digit bits
Contains a value from 0 to 9.

Note 1: A write to this register is only allowed when RTCWREN = 1.

© 2011-2012 Microchip Technology Inc.

REGISTER 21-9: ALRMVAL (WHEN ALRMPTR<1:0> = 01): ALARM WEEKDAY AND HOURS VALUE REGISTER(1)

U-0	U-0	U-0	U-0	U-0	R/W-x	R/W-x	R/W-x
—	—	—	—	—	WDAY2	WDAY1	WDAY0
bit 15							bit 8

U-0	U-0	R/W-x	R/W-x	R/W-x	R/W-x	R/W-x	R/W-x
—	—	HRTEN<1:0>		HRONE<3:0>			
bit 7							bit 0

Legend:			
R = Readable bit	W = Writable bit	U = Unimplemented bit, read as ‘0’	
-n = Value at POR	‘1’ = Bit is set	‘0’ = Bit is cleared	x = Bit is unknown

bit 15-11 **Unimplemented:** Read as ‘0’

bit 10-8 **WDAY<2:0>:** Binary Coded Decimal Value of Weekday Digit bits
Contains a value from 0 to 6.

bit 7-6 **Unimplemented:** Read as ‘0’

bit 5-4 **HRTEN<1:0>:** Binary Coded Decimal Value of Hour’s Tens Digit bits
Contains a value from 0 to 2.

bit 3-0 **HRONE<3:0>:** Binary Coded Decimal Value of Hour’s Ones Digit bits
Contains a value from 0 to 9.

Note 1: A write to this register is only allowed when RTCWREN = 1.

REGISTER 21-10: ALRMVAL (WHEN ALRMPTR<1:0> = 00): ALARM MINUTES AND SECONDS VALUE REGISTER

U-0	R/W-x	R/W-x	R/W-x	R/W-x	R/W-x	R/W-x	R/W-x
—	MINTEN<2:0>			MINONE<3:0>			
bit 15							bit 8

U-0	R/W-x	R/W-x	R/W-x	R/W-x	R/W-x	R/W-x	R/W-x
—	SECTEN<2:0>			SECONE<3:0>			
bit 7							bit 0

Legend:			
R = Readable bit	W = Writable bit	U = Unimplemented bit, read as ‘0’	
-n = Value at POR	‘1’ = Bit is set	‘0’ = Bit is cleared	x = Bit is unknown

bit 15 **Unimplemented:** Read as ‘0’

bit 14-12 **MINTEN<2:0>:** Binary Coded Decimal Value of Minute’s Tens Digit bits
Contains a value from 0 to 5.

bit 11-8 **MINONE<3:0>:** Binary Coded Decimal Value of Minute’s Ones Digit bits
Contains a value from 0 to 9.

bit 7 **Unimplemented:** Read as ‘0’

bit 6-4 **SECTEN<2:0>:** Binary Coded Decimal Value of Second’s Tens Digit bits
Contains a value from 0 to 5.

bit 3-0 **SECONE<3:0>:** Binary Coded Decimal Value of Second’s Ones Digit bits
Contains a value from 0 to 9.

© 2011-2012 Microchip Technology Inc.

22.0 CHARGE TIME MEASUREMENT UNIT (CTMU)

Note 1: This data sheet summarizes the features of the dsPIC33FJ16(GP/MC)101/102 and dsPIC33FJ32(GP/MC)101/102/104 device families of devices. It is not intended to be a comprehensive reference source. To complement the information in this data sheet, refer to **Section 55. "Charge Time Measurement Unit (CTMU)"** (DS70635) in the "*dsPIC33F/PIC24H Family Reference Manual*", which is available on the Microchip web site (www.microchip.com).

2: Some registers and associated bits described in this section may not be available on all devices. Refer to **Section 4.0 "Memory Organization"** in this data sheet for device-specific register and bit information.

The Charge Time Measurement Unit (CTMU) is a flexible analog module that provides accurate differential time measurement between pulse sources, as well as asynchronous pulse generation. Its key features include:

- Four edge input trigger sources
- Polarity control for each edge source
- Control of edge sequence
- Control of response to edges
- Precise time measurement resolution of 200 ps
- Accurate current source suitable for capacitive measurement
- On-chip temperature measurement using a built-in diode

Together with other on-chip analog modules, the CTMU can be used to precisely measure time, measure capacitance, measure relative changes in capacitance or generate output pulses that are independent of the system clock.

The CTMU module is ideal for interfacing with capacitive-based sensors. The CTMU is controlled through three registers: CTMUCON1, CTMUCON2 and CTMUICON. CTMUCON1 enables the module, the edge delay generation, sequencing of edges, and controls the current source and the output trigger. CTMUCON2 controls the edge source selection, edge source polarity selection and edge sampling mode. The CTMUICON register controls the selection and trim of the current source.

Figure 22-1 shows the CTMU block diagram.

FIGURE 22-1: CTMU BLOCK DIAGRAM

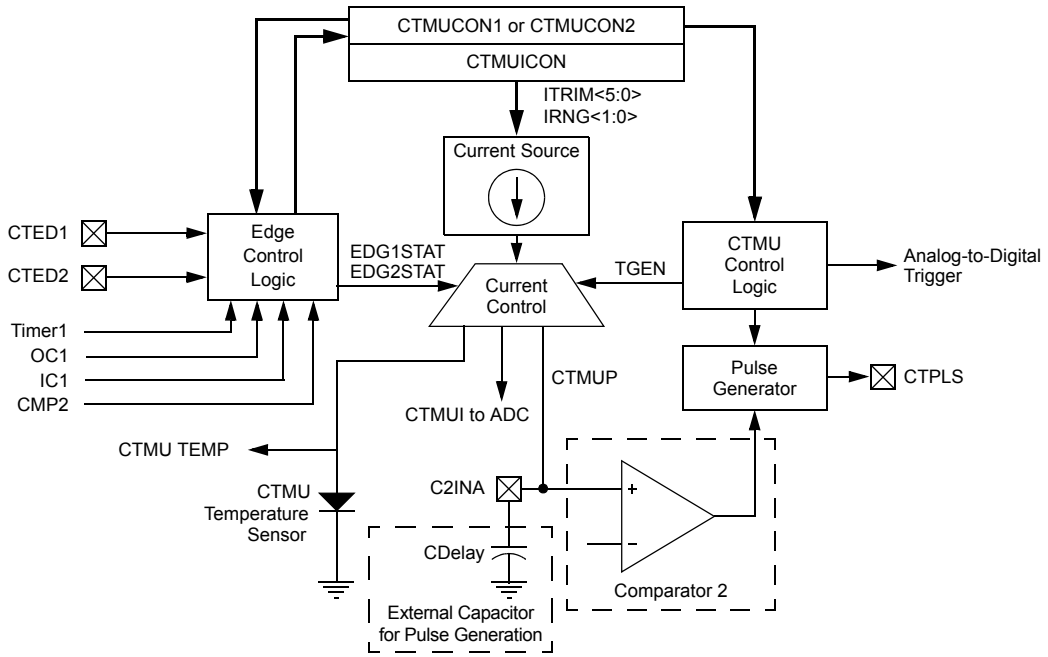

Current Control Selection	TGEN	EDG1STAT, EDG2STAT
CTMU TEMP	0	EDG1STAT = EDG2STAT
CTMUI	0	EDG1STAT ≠ EDG2STAT
CTMUP	1	EDG1STAT ≠ EDG2STAT
No Connect	1	EDG1STAT = EDG2STAT

© 2011-2012 Microchip Technology Inc.

22.1 CTMU Control Registers

REGISTER 22-1: CTMUCON1: CTMU CONTROL REGISTER 1

R/W-0	U-0	R/W-0	R/W-0	R/W-0	R/W-0	R/W-0	R/W-0
CTMUEN	—	CTMUSIDL	TGEN(1)	EDGEN	EDGSEQEN	IDISSEN(2)	CTTRIG
bit 15							bit 8

U-0	U-0	U-0	U-0	U-0	U-0	U-0	U-0
—	—	—	—	—	—	—	—
bit 7							bit 0

Legend:			
R = Readable bit	W = Writable bit	U = Unimplemented bit, read as ‘0’	
-n = Value at POR	‘1’ = Bit is set	‘0’ = Bit is cleared	x = Bit is unknown

bit 15 **CTMUEN:** CTMU Enable bit
1 = Module is enabled
0 = Module is disabled

bit 14 **Unimplemented:** Read as ‘0’

bit 13 **CTMUSIDL:** CTMU Stop in Idle Mode bit
1 = Discontinues module operation when device enters Idle mode
0 = Continues module operation in Idle mode

bit 12 **TGEN:** Time Generation Enable bit(1)
1 = Enables edge delay generation
0 = Disables edge delay generation

bit 11 **EDGEN:** Edge Enable bit
1 = Edges are not blocked
0 = Edges are blocked

bit 10 **EDGSEQEN:** Edge Sequence Enable bit
1 = Edge 1 event must occur before Edge 2 event can occur
0 = No edge sequence is needed

bit 9 **IDISSEN:** Analog Current Source Control bit(2)
1 = Analog current source output is grounded
0 = Analog current source output is not grounded

bit 8 **CTTRIG:** Trigger Control bit
1 = Trigger output is enabled
0 = Trigger output is disabled

bit 7-0 **Unimplemented:** Read as ‘0’

Note 1: If TGEN = 1, the peripheral inputs and outputs must be configured to an available RPn pin. For more information, see **Section 10.4 “Peripheral Pin Select (PPS)”**.

2: The ADC module S&H capacitor is not automatically discharged between sample/conversion cycles. Software using the ADC as part of a capacitance measurement must discharge the ADC capacitor before conducting the measurement. The IDISSEN bit, when set to ‘1’, performs this function. The ADC must be sampling while the IDISSEN bit is active to connect the discharge sink to the capacitor array.

REGISTER 22-2: CTMUCON2: CTMU CONTROL REGISTER 2

R/W-0	R/W-0	R/W-0	R/W-0	R/W-0	R/W-0	R/W-0	R/W-0
EDG1MOD	EDG1POL	EDG1SEL<3:0>				EDG2STAT	EDG1STAT
bit 15							bit 8

R/W-0	R/W-0	R/W-0	R/W-0	R/W-0	R/W-0	U-0	U-0
EDG2MOD	EDG2POL	EDG2SEL<3:0>				—	—
bit 7							bit 0

Legend:			
R = Readable bit	W = Writable bit	U = Unimplemented bit, read as ‘0’	
-n = Value at POR	‘1’ = Bit is set	‘0’ = Bit is cleared	x = Bit is unknown

bit 15 **EDG1MOD:** Edge 1 Edge Sampling Selection bit
1 = Edge 1 is edge-sensitive
0 = Edge 1 is level-sensitive

bit 14 **EDG1POL:** Edge 1 Polarity Select bit
1 = Edge 1 is programmed for a positive edge response
0 = Edge 1 is programmed for a negative edge response

bit 13-10 **EDG1SEL<3:0>:** Edge 1 Source Select bits
1xxx = Reserved
01xx = Reserved
0011 = CTED1 pin
0010 = CTED2 pin
0001 = OC1 module
0000 = Timer1 module

bit 9 **EDG2STAT:** Edge 2 Status bit
Indicates the status of Edge 2 and can be written to control the edge source.
1 = Edge 2 has occurred
0 = Edge 2 has not occurred

bit 8 **EDG1STAT:** Edge 1 Status bit
Indicates the status of Edge 1 and can be written to control the edge source.
1 = Edge 1 has occurred
0 = Edge 1 has not occurred

bit 7 **EDG2MOD:** Edge 2 Edge Sampling Selection bit
1 = Edge 2 is edge-sensitive
0 = Edge 2 is level-sensitive

bit 6 **EDG2POL:** Edge 2 Polarity Select bit
1 = Edge 2 is programmed for a positive edge response
0 = Edge 2 is programmed for a negative edge response

bit 5-2 **EDG2SEL<3:0>:** Edge 2 Source Select bits
1xxx = Reserved
01xx = Reserved
0011 = CTED2 pin
0010 = CTED1 pin
0001 = Comparator 2 module
0000 = IC1 module

bit 1-0 **Unimplemented:** Read as ‘0’

© 2011-2012 Microchip Technology Inc.

REGISTER 22-3: CTMUICON: CTMU CURRENT CONTROL REGISTER

R/W-0	R/W-0	R/W-0	R/W-0	R/W-0	R/W-0	R/W-0	R/W-0
ITRIM<5:0>						IRNG<1:0>	
bit 15							bit 8

U-0	U-0	U-0	U-0	U-0	U-0	U-0	U-0
—	—	—	—	—	—	—	—
bit 7							bit 0

Legend:			
R = Readable bit	W = Writable bit	U = Unimplemented bit, read as ‘0’	
-n = Value at POR	‘1’ = Bit is set	‘0’ = Bit is cleared	x = Bit is unknown

bit 15-10 **ITRIM<5:0>:** Current Source Trim bits
`011111` = Nominal current output specified by IRNG<1:0> + 62%
`011110` = Nominal current output specified by IRNG<1:0> + 60%
•
•
•
`000001` = Nominal current output specified by IRNG<1:0> + 2%
`000000` = Nominal current output specified by IRNG<1:0>
`111111` = Nominal current output specified by IRNG<1:0> – 2%
•
•
•
`100010` = Nominal current output specified by IRNG<1:0> – 62%
`100001` = Nominal current output specified by IRNG<1:0> – 64%

bit 9-8 **IRNG<1:0>:** Current Source Range Select bits
`11` = 100 × Base Current(1)
`10` = 10 × Base Current
`01` = Base current level (0.55 μA nominal)
`00` = Reserved

bit 7-0 **Unimplemented:** Read as ‘`0`’

Note 1: This setting must be used for the CTMU temperature sensor.

NOTES:

© 2011-2012 Microchip Technology Inc.

23.0 SPECIAL FEATURES

Note 1: This data sheet summarizes the features of the dsPIC33FJ16(GP/MC)101/102 and dsPIC33FJ32(GP/MC)101/102/104 devices. It is not intended to be a comprehensive reference source. To complement the information in this data sheet, refer to **Section 24. "Programming and Diagnostics"** (DS70207) and **Section 25. "Device Configuration"** (DS70194) in the *"dsPIC33F/PIC24H Family Reference Manual"*, which are available from the Microchip web site (www.microchip.com).

2: Some registers and associated bits described in this section may not be available on all devices. Refer to **Section 4.0 "Memory Organization"** in this data sheet for device-specific register and bit information.

dsPIC33FJ16(GP/MC)101/102 and dsPIC33FJ32(GP/MC)101/102/104 devices include several features intended to maximize application flexibility and reliability, and minimize cost through elimination of external components. These are:

- Flexible Configuration
- Watchdog Timer (WDT)
- Code Protection
- In-Circuit Serial Programming™ (ICSP™)
- In-Circuit Emulation

23.1 Configuration Bits

The Configuration Shadow register bits can be configured (read as '0') or left unprogrammed (read as '1') to select various device configurations. These read-only bits are mapped starting at program memory location, 0xF80000. A detailed explanation of the various bit functions is provided in Table 23-4.

Note that address 0xF80000 is beyond the user program memory space and belongs to the configuration memory space (0x800000-0xFFFFFF), which can only be accessed using table reads.

In dsPIC33FJ16(GP/MC)101/102 and dsPIC33FJ32(GP/MC)101/102/104 devices, the configuration bytes are implemented as volatile memory. This means that configuration data must be programmed each time the device is powered up. Configuration data is stored in the two words at the top of the on-chip program memory space, known as the Flash Configuration Words. Their specific locations are shown in Table 23-2. These are packed representations of the actual device Configuration bits, whose actual locations are distributed among several locations in configuration space. The configuration data is automatically loaded from the Flash Configuration Words to the proper Configuration registers during device Resets.

Note: Configuration data is reloaded on all types of device Resets.

When creating applications for these devices, users should always specifically allocate the location of the Flash Configuration Word for configuration data. This is to make certain that program code is not stored in this address when the code is compiled.

The upper byte of all Flash Configuration Words in program memory should always be '1111 1111'. This makes them appear to be NOP instructions in the remote event that their locations are ever executed by accident. Since Configuration bits are not implemented in the corresponding locations, writing '1's to these locations has no effect on device operation.

Note: Performing a page erase operation on the last page of program memory clears the Flash Configuration Words, enabling code protection as a result. Therefore, users should avoid performing page erase operations on the last page of program memory.

The Configuration Shadow register map is shown in Table 23-1.

TABLE 23-1: CONFIGURATION SHADOW REGISTER MAP

Address	Name	Bit 7	Bit 6	Bit 5	Bit 4	Bit 3	Bit 2	Bit 1	Bit 0
F80004	FGS	—	—	—	—	—	—	GCP	GWRP
F80006	FOSCSEL	IESO	PWMLOCK(1)	—	WDTWIN<1:0>		FNOSC<2:0>		
F80008	FOSC	FCKSM<1:0>		IOL1WAY	—	—	OSCIOFNC	POSCMD<1:0>	
F8000A	FWDT	FWDTEN	WINDIS	PLLKEN	WDTPRE	WDTPOST<3:0>			
F8000C	FPOR	PWMPIN(1)	HPOL(1)	LPOL(1)	ALTI2C1	—	—	—	—
F8000E	FICD	Reserved(2)	—	Reserved(3)	Reserved(3)	—	—	ICS<1:0>	

Legend: — = unimplemented, read as '1'.
Note 1: These bits are available in dsPIC33FJ(16/32)MC10X devices only.
2: This bit is reserved for use by development tools.
3: These bits are reserved, program as '0'.

The Configuration Flash Word maps are shown in Table 23-2 and Table 23-3.

TABLE 23-2: CONFIGURATION FLASH WORDS FOR dsPIC33FJ16(GP/MC)10X DEVICES(1)

File Name	Addr.	Bits 23-16	Bit 15	Bit 14	Bit 13	Bit 12	Bit 11	Bit 10	Bit 9	Bit 8	Bit 7	Bit 6	Bit 5	Bit 4	Bit 3	Bit 2	Bit 1	Bit 0
CONFIG2	002BFC	—	IESO	PWMLOCK(2)	PWMPIN(2)	WDTWIN<1:0>		FNOSC<2:0>			FCKSM<1:0>		OSCIOFNC	IOL1WAY	LPOL(2)	ALTI2C1	POSCMD<1:0>	
CONFIG1	002BFE	—	Reserved(3)	Reserved(3)	GCP	GWRP	Reserved(4)	HPOL(2)	ICS<1:0>		FWDTEN	WINDIS	PLLKEN	WDTPRE	WDTPOST<3:0>			

Legend: — = unimplemented, read as '1'.
Note 1: During a Power-on Reset (POR), the contents of these Flash locations are transferred to the Configuration Shadow registers.
2: These bits are reserved on dsPIC33FJ16GP10X devices and read as '1'.
3: These bits are reserved, program as '0'.
4: This bit is reserved for use by development tools and must be programmed as '1'.

TABLE 23-3: CONFIGURATION FLASH WORDS FOR dsPIC33FJ32(GP/MC)10X DEVICES(1)

File Name	Addr.	Bits 23-16	Bit 15	Bit 14	Bit 13	Bit 12	Bit 11	Bit 10	Bit 9	Bit 8	Bit 7	Bit 6	Bit 5	Bit 4	Bit 3	Bit 2	Bit 1	Bit 0
CONFIG2	0057FC	—	IESO	PWMLOCK(2)	PWMPIN(2)	WDTWIN<1:0>		FNOSC<2:0>			FCKSM<1:0>		OSCIOFNC	IOL1WAY	LPOL(2)	ALTI2C1	POSCMD<1:0>	
CONFIG1	0057FE	—	Reserved(3)	Reserved(3)	GCP	GWRP	Reserved(4)	HPOL(2)	ICS<1:0>		FWDTEN	WINDIS	PLLKEN	WDTPRE	WDTPOST<3:0>			

Legend: — = unimplemented, read as '1'.
Note 1: During a Power-on Reset (POR), the contents of these Flash locations are transferred to the Configuration Shadow registers.
2: These bits are reserved in dsPIC33FJ32GP10X devices and read as '1'.
3: These bits are reserved, program as '0'.
4: This bit is reserved for use by development tools and must be programmed as '1'.

Preliminary
© 2011-2012 Microchip Technology Inc.

TABLE 23-4: dsPIC33F CONFIGURATION BITS DESCRIPTION

Bit Field	Description
GCP	General Segment Code-Protect bit 1 = User program memory is not code-protected 0 = Code protection is enabled for the entire program memory space
GWRP	General Segment Write-Protect bit 1 = User program memory is not write-protected 0 = User program memory is write-protected
IESO	Two-Speed Oscillator Start-up Enable bit 1 = Starts up device with FRC, then automatically switches to the user-selected oscillator source when ready 0 = Starts up device with user-selected oscillator source
PWMLOCK	PWM Lock Enable bit 1 = Certain PWM registers may only be written after key sequence 0 = PWM registers may be written without a key sequence
WDTWIN<1:0>	Watchdog Timer Window Select bits 11 = WDT window is 24% of WDT period 10 = WDT window is 37.5% of WDT period 01 = WDT window is 50% of WDT period 00 = WDT window is 75% of WDT period
FNOSC<2:0>	Oscillator Selection bits 111 = Fast RC Oscillator with Divide-by-N (FRCDIVN) 110 = Reserved; do not use 101 = Low-Power RC Oscillator (LPRC) 100 = Secondary Oscillator (SOSC) 011 = Primary Oscillator with PLL module (MS + PLL, EC + PLL) 010 = Primary Oscillator (MS, HS, EC) 001 = Fast RC Oscillator with Divide-by-N and PLL module (FRCDIVN + PLL) 000 = Fast RC Oscillator (FRC)
FCKSM<1:0>	Clock Switching Mode bits 1x = Clock switching is disabled, Fail-Safe Clock Monitor is disabled 01 = Clock switching is enabled, Fail-Safe Clock Monitor is disabled 00 = Clock switching is enabled, Fail-Safe Clock Monitor is enabled
IOL1WAY	Peripheral Pin Select Configuration bit 1 = Allow only one reconfiguration 0 = Allow multiple reconfigurations
OSCIOFNC	OSC2 Pin Function bit (except in MS and HS modes) 1 = OSC2 is clock output 0 = OSC2 is general purpose digital I/O pin
POSCMD<1:0>	Primary Oscillator Mode Select bits 11 = Primary Oscillator is disabled 10 = HS Crystal Oscillator mode (10 MHz-32 MHz) 01 = MS Crystal Oscillator mode (3 MHz-10 MHz) 00 = EC (External Clock) mode (DC-32 MHz)
FWDTEN	Watchdog Timer Enable bit 1 = Watchdog Timer is always enabled (LPRC oscillator cannot be disabled; clearing the SWDTEN bit in the RCON register will have no effect) 0 = Watchdog Timer is enabled/disabled by user software (LPRC can be disabled by clearing the SWDTEN bit in the RCON register)
WINDIS	Watchdog Timer Window Enable bit 1 = Watchdog Timer in Non-Window mode 0 = Watchdog Timer in Window mode

TABLE 23-4: dsPIC33F CONFIGURATION BITS DESCRIPTION (CONTINUED)

Bit Field	Description
WDTPRE	Watchdog Timer Prescaler bit 1 = 1:128 0 = 1:32
WDTPOST<3:0>	Watchdog Timer Postscaler bits 1111 = 1:32,768 1110 = 1:16,384 • • • 0001 = 1:2 0000 = 1:1
PLLKEN	PLL Lock Enable bit 1 = Clock switch to PLL will wait until the PLL lock signal is valid 0 = Clock switch will not wait for the PLL lock signal
ALTI2C	Alternate I^2C™ Pins bit 1 = I^2C is mapped to SDA1/SCL1 pins 0 = I^2C is mapped to ASDA1/ASCL1 pins
ICS<1:0>	ICD Communication Channel Select bits 11 = Communicate on PGEC1 and PGED1 10 = Communicate on PGEC2 and PGED2 01 = Communicate on PGEC3 and PGED3 00 = Reserved, do not use
PWMPIN	Motor Control PWM Module Pin Mode bit 1 = PWM module pins controlled by PORT register at device Reset (tri-stated) 0 = PWM module pins controlled by PWM module at device Reset (configured as output pins)
HPOL	Motor Control PWM High Side Polarity bit 1 = PWM module high side output pins have active-high output polarity 0 = PWM module high side output pins have active-low output polarity
LPOL	Motor Control PWM Low Side Polarity bit 1 = PWM module low side output pins have active-high output polarity 0 = PWM module low side output pins have active-low output polarity

© 2011-2012 Microchip Technology Inc.

REGISTER 23-1: DEVID: DEVICE ID REGISTER

R	R	R	R	R	R	R	R
DEVID<23:16>(1)							
bit 23							bit 16

R	R	R	R	R	R	R	R
DEVID<15:8>(1)							
bit 15							bit 8

R	R	R	R	R	R	R	R
DEVID<7:0>(1)							
bit 7							bit 0

Legend:	R = Read-Only bit	U = Unimplemented bit

bit 23-0 **DEIDV<23:0>:** Device Identifier bits(1)

Note 1: Refer to the *"dsPIC33F Flash Programming Specification for Devices with Volatile Configuration Bits"* (DS70659) for the list of device ID values.

REGISTER 23-2: DEVREV: DEVICE REVISION REGISTER

R	R	R	R	R	R	R	R
DEVREV<23:16>(1)							
bit 23							bit 16

R	R	R	R	R	R	R	R
DEVREV<15:8>(1)							
bit 15							bit 8

R	R	R	R	R	R	R	R
DEVREV<7:0>(1)							
bit 7							bit 0

Legend:	R = Read-only bit	U = Unimplemented bit

bit 23-0 **DEVREV<23:0>:** Device Revision bits(1)

Note 1: Refer to the *"dsPIC33F Flash Programming Specification for Devices with Volatile Configuration Bits"* (DS70659) for the list of device revision values.

23.2 On-Chip Voltage Regulator

All of the dsPIC33FJ16(GP/MC)101/102 and dsPIC33FJ32(GP/MC)101/102/104 devices power their core digital logic at a nominal 2.5V. This can create a conflict for designs that are required to operate at a higher typical voltage, such as 3.3V. To simplify system design, all devices in the dsPIC33FJ16(GP/MC)101/102 and dsPIC33FJ32(GP/MC)101/102/104 family incorporate an on-chip regulator that allows the device to run its core logic from VDD.

The regulator provides power to the core from the other VDD pins. When the regulator is enabled, a low-ESR (less than 5 ohms) capacitor (such as tantalum or ceramic) must be connected to the VCAP pin (Figure 23-1). This helps to maintain the stability of the regulator. The recommended value for the filter capacitor is provided in Table 26-14 located in **Section 26.1 "DC Characteristics"**.

Note:	It is important for low-ESR capacitors to be placed as close as possible to the VCAP pin.

On a POR, it takes approximately 20 µs for the on-chip voltage regulator to generate an output voltage. During this time, designated as TSTARTUP, code execution is disabled. TSTARTUP is applied every time the device resumes operation after any power-down.

FIGURE 23-1: CONNECTIONS FOR THE ON-CHIP VOLTAGE REGULATOR(1,2,3)

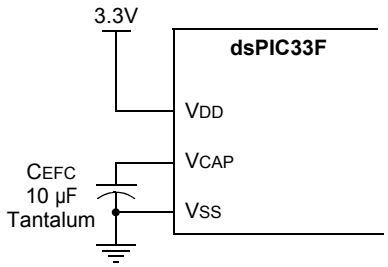

Note 1: These are typical operating voltages. Refer to Table 26-14 located in **Section 26.1 "DC Characteristics"** for the full operating ranges of VDD and VCAP.

2: It is important for low-ESR capacitors to be placed as close as possible to the VCAP pin.

3: Typical VCAP pin voltage = 2.5V when VDD ≥ VDDMIN.

23.3 BOR: Brown-out Reset

The Brown-out Reset (BOR) module is based on an internal voltage reference circuit that monitors the regulated supply voltage, VCAP. The main purpose of the BOR module is to generate a device Reset when a brown-out condition occurs. Brown-out conditions are generally caused by glitches on the AC mains (for example, missing portions of the AC cycle waveform due to bad power transmission lines or voltage sags due to excessive current draw when a large inductive load is turned on).

A BOR generates a Reset pulse, which resets the device. The BOR selects the clock source, based on the device Configuration bit values (FNOSC<2:0> and POSCMD<1:0>).

If an Oscillator mode is selected, the BOR activates the Oscillator Start-up Timer (OST). The system clock is held until OST expires. If the PLL is used, the clock is held until the LOCK bit (OSCCON<5>) is '1'.

Concurrently, the PWRT Time-out (TPWRT) is applied before the internal Reset is released. If TPWRT = 0 and a crystal oscillator is being used, then a nominal delay of TFSCM = 100 is applied. The total delay in this case is TFSCM.

The BOR Status bit (RCON<1>) is set to indicate that a BOR has occurred. The BOR circuit continues to operate while in Sleep or Idle modes and resets the device should VDD fall below the BOR threshold voltage.

© 2011-2012 Microchip Technology Inc.

23.4 Watchdog Timer (WDT)

For dsPIC33FJ16(GP/MC)101/102 and dsPIC33FJ32(GP/MC)101/102/104 devices, the WDT is driven by the LPRC oscillator. When the WDT is enabled, the clock source is also enabled.

23.4.1 PRESCALER/POSTSCALER

The nominal WDT clock source from LPRC is 32 kHz. This feeds a prescaler than can be configured for either 5-bit (divide-by-32) or 7-bit (divide-by-128) operation. The prescaler is set by the WDTPRE Configuration bit. With a 32 kHz input, the prescaler yields a nominal WDT Time-out (TWDT) period of 1 ms in 5-bit mode or 4 ms in 7-bit mode.

A variable postscaler divides down the WDT prescaler output and allows for a wide range of time-out periods. The postscaler is controlled by the WDTPOST<3:0> Configuration bits (FWDT<3:0>), which allow the selection of 16 settings, from 1:1 to 1:32,768. Using the prescaler and postscaler, time-out periods, ranging from 1 ms to 131 seconds, can be achieved.

The WDT, prescaler and postscaler are reset:

- On any device Reset
- On the completion of a clock switch, whether invoked by software (i.e., setting the OSWEN bit after changing the NOSCx bits) or by hardware (i.e., Fail-Safe Clock Monitor)
- When a PWRSAV instruction is executed (i.e., Sleep or Idle mode is entered)
- When the device exits Sleep or Idle mode to resume normal operation
- By a CLRWDT instruction during normal execution

Note:	The CLRWDT and PWRSAV instructions clear the prescaler and postscaler counts when executed.

23.4.2 SLEEP AND IDLE MODES

If the WDT is enabled, it will continue to run during Sleep or Idle modes. When the WDT time-out occurs, the device will wake the device and code execution will continue from where the PWRSAV instruction was executed. The corresponding SLEEP or IDLE bits (RCON<3:2>) will need to be cleared in software after the device wakes up.

23.4.3 ENABLING WDT

The WDT is enabled or disabled by the FWDTEN Configuration bit in the FWDT Configuration register. When the FWDTEN Configuration bit is set, the WDT is always enabled.

The WDT can be optionally controlled in software when the FWDTEN Configuration bit has been programmed to '0'. The WDT is enabled in software by setting the SWDTEN control bit (RCON<5>). The SWDTEN control bit is cleared on any device Reset. The software WDT option allows the user application to enable the WDT for critical code segments and disables the WDT during non-critical segments for maximum power savings.

Note:	If the WINDIS bit (FWDT<6>) is cleared, the CLRWDT instruction should be executed by the application software only during the last 1/4 of the WDT period. This CLRWDT window can be determined by using a timer. If a CLRWDT instruction is executed before this window, a WDT Reset occurs.

The WDT flag bit, WDTO (RCON<4>), is not automatically cleared following a WDT time-out. To detect subsequent WDT events, the flag must be cleared in software.

FIGURE 23-2: WDT BLOCK DIAGRAM

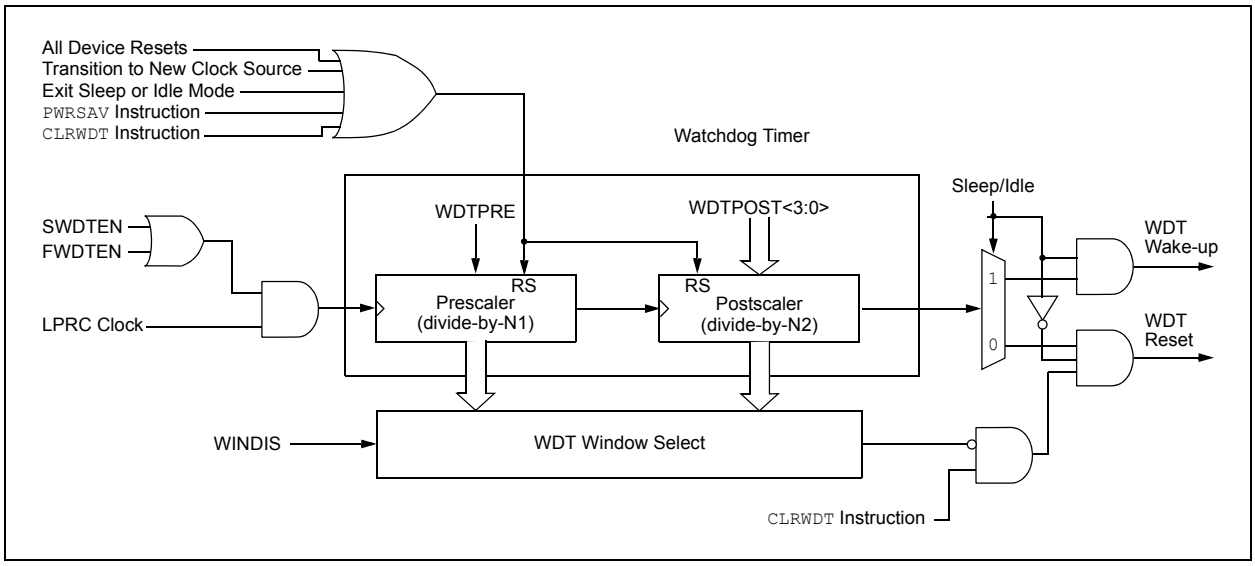

23.5 In-Circuit Serial Programming™ (ICSP™)

Devices can be serially programmed while in the end application circuit. This is done with two lines for clock and data and three other lines for power, ground and the programming sequence. Serial programming allows customers to manufacture boards with unprogrammed devices and then program the Digital Signal Controller just before shipping the product. Serial programming also allows the most recent firmware or a custom firmware to be programmed. Refer to the *"dsPIC33F Flash Programming Specification for Devices with Volatile Configuration Bits"* (DS70659) for details about In-Circuit Serial Programming (ICSP).

Any of the three pairs of programming clock/data pins can be used:

- PGEC1 and PGED1
- PGEC2 and PGED2
- PGEC3 and PGED3

23.6 In-Circuit Debugger

When MPLAB® ICD 3 is selected as a debugger, the in-circuit debugging functionality is enabled. This function allows simple debugging functions when used with MPLAB IDE. Debugging functionality is controlled through the PGECx (Emulation/Debug Clock) and PGEDx (Emulation/Debug Data) pin functions.

Any of the three pairs of debugging clock/data pins can be used:

- PGEC1 and PGED1
- PGEC2 and PGED2
- PGEC3 and PGED3

To use the in-circuit debugger function of the device, the design must implement ICSP connections to $\overline{MCLR}$, V_{DD}, V_{SS} and the PGECx/PGEDx pin pair. In addition, when the feature is enabled, some of the resources are not available for general use. These resources include the first 80 bytes of data RAM and two I/O pins.

© 2011-2012 Microchip Technology Inc.

24.0 INSTRUCTION SET SUMMARY

Note: This data sheet summarizes the features of the dsPIC33FJ16(GP/MC)101/102 and dsPIC33FJ32(GP/MC)101/102/104 devices. However, it is not intended to be a comprehensive reference source. To complement the information in this data sheet, refer to the latest family reference sections of the *"dsPIC33F/PIC24H Family Reference Manual"*, which are available from the Microchip web site (www.microchip.com).

The dsPIC33F instruction set is identical to that of the dsPIC30F.

Most instructions are a single program memory word (24 bits). Only three instructions require two program memory locations.

Each single-word instruction is a 24-bit word, divided into an 8-bit opcode, which specifies the instruction type and one or more operands, which further specify the operation of the instruction.

The instruction set is highly orthogonal and is grouped into five basic categories:

- Word or byte-oriented operations
- Bit-oriented operations
- Literal operations
- DSP operations
- Control operations

Table 24-1 shows the general symbols used in describing the instructions.

The dsPIC33F instruction set summary in Table 24-2 lists all the instructions, along with the status flags affected by each instruction.

Most word or byte-oriented W register instructions (including barrel shift instructions) have three operands:

- The first source operand, which is typically a register 'Wb' without any address modifier
- The second source operand, which is typically a register 'Ws' with or without an address modifier
- The destination of the result, which is typically a register 'Wd' with or without an address modifier

However, word or byte-oriented file register instructions have two operands:

- The file register specified by the value 'f'
- The destination, which could be either the file register 'f' or the W0 register, which is denoted as 'WREG'

Most bit-oriented instructions (including simple rotate/shift instructions) have two operands:

- The W register (with or without an address modifier) or file register (specified by the value of 'Ws' or 'f')
- The bit in the W register or file register (specified by a literal value or indirectly by the contents of register 'Wb')

The literal instructions that involve data movement can use some of the following operands:

- A literal value to be loaded into a W register or file register (specified by 'k')
- The W register or file register where the literal value is to be loaded (specified by 'Wb' or 'f')

However, literal instructions that involve arithmetic or logical operations use some of the following operands:

- The first source operand, which is a register 'Wb' without any address modifier
- The second source operand, which is a literal value
- The destination of the result (only if not the same as the first source operand), which is typically a register 'Wd' with or without an address modifier

The `MAC` class of DSP instructions can use some of the following operands:

- The accumulator (A or B) to be used (required operand)
- The W registers to be used as the two operands
- The X and Y address space prefetch operations
- The X and Y address space prefetch destinations
- The accumulator write-back destination

The other DSP instructions do not involve any multiplication and can include:

- The accumulator to be used (required)
- The source or destination operand (designated as Wso or Wdo, respectively) with or without an address modifier
- The amount of shift specified by a W register 'Wn' or a literal value

The control instructions can use some of the following operands:

- A program memory address
- The mode of the table read and table write instructions

Most instructions are a single word. Certain double-word instructions are designed to provide all the required information in these 48 bits. In the second word, the 8 MSbs are '0's. If this second word is executed as an instruction (by itself), it will execute as a NOP.

The double-word instructions execute in two instruction cycles.

Most single-word instructions are executed in a single instruction cycle, unless a conditional test is true, or the Program Counter is changed as a result of the instruction. In these cases, the execution takes two instruction cycles with the additional instruction cycle(s) executed as a NOP. Notable exceptions are the BRA (unconditional/computed branch), indirect CALL/GOTO, all table reads and writes and RETURN/RETFIE instructions, which are single-word instructions but take two or three cycles. Certain instructions that involve skipping over the subsequent instruction require either two or three cycles if the skip is performed, depending on whether the instruction being skipped is a single-word or two-word instruction. Moreover, double-word moves require two cycles.

Note: For more details on the instruction set, refer to the *"16-Bit MCU and DSC Programmer's Reference Manual"* (DS70157).

TABLE 24-1: SYMBOLS USED IN OPCODE DESCRIPTIONS

Field	Description
#text	Means literal defined by "text"
(text)	Means "content of text"
[text]	Means "the location addressed by text"
{ }	Optional field or operation
<n:m>	Register bit field
.b	Byte mode selection
.d	Double-Word mode selection
.S	Shadow register select
.w	Word mode selection (default)
Acc	One of two accumulators {A, B}
AWB	Accumulator write-back destination address register ∈ {W13, [W13]+ = 2}
bit4	4-bit bit selection field (used in word addressed instructions) ∈ {0...15}
C, DC, N, OV, Z	MCU Status bits: Carry, Digit Carry, Negative, Overflow, Sticky Zero
Expr	Absolute address, label or expression (resolved by the linker)
f	File register address ∈ {0x0000...0x1FFF}
lit1	1-bit unsigned literal ∈ {0,1}
lit4	4-bit unsigned literal ∈ {0...15}
lit5	5-bit unsigned literal ∈ {0...31}
lit8	8-bit unsigned literal ∈ {0...255}
lit10	10-bit unsigned literal ∈ {0...255} for Byte mode, {0:1023} for Word mode
lit14	14-bit unsigned literal ∈ {0...16384}
lit16	16-bit unsigned literal ∈ {0...65535}
lit23	23-bit unsigned literal ∈ {0...8388608}; LSb must be '0'
None	Field does not require an entry, can be blank
OA, OB, SA, SB	DSP Status bits: ACCA Overflow, ACCB Overflow, ACCA Saturate, ACCB Saturate
PC	Program Counter
Slit10	10-bit signed literal ∈ {-512...511}
Slit16	16-bit signed literal ∈ {-32768...32767}
Slit6	6-bit signed literal ∈ {-16...16}
Wb	Base W register ∈ {W0..W15}
Wd	Destination W register ∈ { Wd, [Wd], [Wd++], [Wd--], [++Wd], [--Wd] }
Wdo	Destination W register ∈ { Wnd, [Wnd], [Wnd++], [Wnd--], [++Wnd], [--Wnd], [Wnd+Wb] }
Wm,Wn	Dividend, Divisor working register pair (direct addressing)

© 2011-2012 Microchip Technology Inc.

TABLE 24-1: SYMBOLS USED IN OPCODE DESCRIPTIONS (CONTINUED)

Field	Description
Wm*Wm	Multiplicand and Multiplier working register pair for Square instructions ∈ {W4 * W4,W5 * W5,W6 * W6,W7 * W7}
Wm*Wn	Multiplicand and Multiplier working register pair for DSP instructions ∈ {W4 * W5,W4 * W6,W4 * W7,W5 * W6,W5 * W7,W6 * W7}
Wn	One of 16 working registers ∈ {W0..W15}
Wnd	One of 16 destination working registers ∈ {W0..W15}
Wns	One of 16 source working registers ∈ {W0..W15}
WREG	W0 (working register used in file register instructions)
Ws	Source W register ∈ { Ws, [Ws], [Ws++], [Ws--], [++Ws], [--Ws] }
Wso	Source W register ∈ { Wns, [Wns], [Wns++], [Wns--], [++Wns], [--Wns], [Wns+Wb] }
Wx	X data space prefetch address register for DSP instructions ∈ {[W8] + = 6, [W8] + = 4, [W8] + = 2, [W8], [W8] - = 6, [W8] - = 4, [W8] - = 2, [W9] + = 6, [W9] + = 4, [W9] + = 2, [W9], [W9] - = 6, [W9] - = 4, [W9] - = 2, [W9 + W12], none}
Wxd	X data space prefetch destination register for DSP instructions ∈ {W4..W7}
Wy	Y data space prefetch address register for DSP instructions ∈ {[W10] + = 6, [W10] + = 4, [W10] + = 2, [W10], [W10] - = 6, [W10] - = 4, [W10] - = 2, [W11] + = 6, [W11] + = 4, [W11] + = 2, [W11], [W11] - = 6, [W11] - = 4, [W11] - = 2, [W11 + W12], none}
Wyd	Y data space prefetch destination register for DSP instructions ∈ {W4..W7}

TABLE 24-2: INSTRUCTION SET OVERVIEW

Base Instr #	Assembly Mnemonic	Assembly Syntax	Description	# of Words	# of Cycles	Status Flags Affected
1	ADD	ADD Acc	Add Accumulators	1	1	OA,OB,SA,SB
		ADD f	f = f + WREG	1	1	C,DC,N,OV,Z
		ADD f,WREG	WREG = f + WREG	1	1	C,DC,N,OV,Z
		ADD #lit10,Wn	Wd = lit10 + Wd	1	1	C,DC,N,OV,Z
		ADD Wb,Ws,Wd	Wd = Wb + Ws	1	1	C,DC,N,OV,Z
		ADD Wb,#lit5,Wd	Wd = Wb + lit5	1	1	C,DC,N,OV,Z
		ADD Wso,#Slit4,Acc	16-bit Signed Add to Accumulator	1	1	OA,OB,SA,SB
2	ADDC	ADDC f	f = f + WREG + (C)	1	1	C,DC,N,OV,Z
		ADDC f,WREG	WREG = f + WREG + (C)	1	1	C,DC,N,OV,Z
		ADDC #lit10,Wn	Wd = lit10 + Wd + (C)	1	1	C,DC,N,OV,Z
		ADDC Wb,Ws,Wd	Wd = Wb + Ws + (C)	1	1	C,DC,N,OV,Z
		ADDC Wb,#lit5,Wd	Wd = Wb + lit5 + (C)	1	1	C,DC,N,OV,Z
3	AND	AND f	f = f .AND. WREG	1	1	N,Z
		AND f,WREG	WREG = f .AND. WREG	1	1	N,Z
		AND #lit10,Wn	Wd = lit10 .AND. Wd	1	1	N,Z
		AND Wb,Ws,Wd	Wd = Wb .AND. Ws	1	1	N,Z
		AND Wb,#lit5,Wd	Wd = Wb .AND. lit5	1	1	N,Z
4	ASR	ASR f	f = Arithmetic Right Shift f	1	1	C,N,OV,Z
		ASR f,WREG	WREG = Arithmetic Right Shift f	1	1	C,N,OV,Z
		ASR Ws,Wd	Wd = Arithmetic Right Shift Ws	1	1	C,N,OV,Z
		ASR Wb,Wns,Wnd	Wnd = Arithmetic Right Shift Wb by Wns	1	1	N,Z
		ASR Wb,#lit5,Wnd	Wnd = Arithmetic Right Shift Wb by lit5	1	1	N,Z
5	BCLR	BCLR f,#bit4	Bit Clear f	1	1	None
		BCLR Ws,#bit4	Bit Clear Ws	1	1	None
6	BRA	BRA C,Expr	Branch if Carry	1	1 (2)	None
		BRA GE,Expr	Branch if greater than or equal	1	1 (2)	None
		BRA GEU,Expr	Branch if unsigned greater than or equal	1	1 (2)	None
		BRA GT,Expr	Branch if greater than	1	1 (2)	None
		BRA GTU,Expr	Branch if unsigned greater than	1	1 (2)	None
		BRA LE,Expr	Branch if less than or equal	1	1 (2)	None
		BRA LEU,Expr	Branch if unsigned less than or equal	1	1 (2)	None
		BRA LT,Expr	Branch if less than	1	1 (2)	None
		BRA LTU,Expr	Branch if unsigned less than	1	1 (2)	None
		BRA N,Expr	Branch if Negative	1	1 (2)	None
		BRA NC,Expr	Branch if Not Carry	1	1 (2)	None
		BRA NN,Expr	Branch if Not Negative	1	1 (2)	None
		BRA NOV,Expr	Branch if Not Overflow	1	1 (2)	None
		BRA NZ,Expr	Branch if Not Zero	1	1 (2)	None
		BRA OA,Expr	Branch if Accumulator A overflow	1	1 (2)	None
		BRA OB,Expr	Branch if Accumulator B overflow	1	1 (2)	None
		BRA OV,Expr	Branch if Overflow	1	1 (2)	None
		BRA SA,Expr	Branch if Accumulator A saturated	1	1 (2)	None
		BRA SB,Expr	Branch if Accumulator B saturated	1	1 (2)	None
		BRA Expr	Branch Unconditionally	1	2	None
		BRA Z,Expr	Branch if Zero	1	1 (2)	None
		BRA Wn	Computed Branch	1	2	None
7	BSET	BSET f,#bit4	Bit Set f	1	1	None
		BSET Ws,#bit4	Bit Set Ws	1	1	None
8	BSW	BSW.C Ws,Wb	Write C bit to Ws<Wb>	1	1	None
		BSW.Z Ws,Wb	Write Z bit to Ws<Wb>	1	1	None

© 2011-2012 Microchip Technology Inc.

TABLE 24-2: INSTRUCTION SET OVERVIEW (CONTINUED)

Base Instr #	Assembly Mnemonic	Assembly Syntax	Description	# of Words	# of Cycles	Status Flags Affected
9	BTG	BTG f,#bit4	Bit Toggle f	1	1	None
		BTG Ws,#bit4	Bit Toggle Ws	1	1	None
10	BTSC	BTSC f,#bit4	Bit Test f, Skip if Clear	1	1 (2 or 3)	None
		BTSC Ws,#bit4	Bit Test Ws, Skip if Clear	1	1 (2 or 3)	None
11	BTSS	BTSS f,#bit4	Bit Test f, Skip if Set	1	1 (2 or 3)	None
		BTSS Ws,#bit4	Bit Test Ws, Skip if Set	1	1 (2 or 3)	None
12	BTST	BTST f,#bit4	Bit Test f	1	1	Z
		BTST.C Ws,#bit4	Bit Test Ws to C	1	1	C
		BTST.Z Ws,#bit4	Bit Test Ws to Z	1	1	Z
		BTST.C Ws,Wb	Bit Test Ws<Wb> to C	1	1	C
		BTST.Z Ws,Wb	Bit Test Ws<Wb> to Z	1	1	Z
13	BTSTS	BTSTS f,#bit4	Bit Test then Set f	1	1	Z
		BTSTS.C Ws,#bit4	Bit Test Ws to C, then Set	1	1	C
		BTSTS.Z Ws,#bit4	Bit Test Ws to Z, then Set	1	1	Z
14	CALL	CALL lit23	Call subroutine	2	2	None
		CALL Wn	Call indirect subroutine	1	2	None
15	CLR	CLR f	f = 0x0000	1	1	None
		CLR WREG	WREG = 0x0000	1	1	None
		CLR Ws	Ws = 0x0000	1	1	None
		CLR Acc,Wx,Wxd,Wy,Wyd,AWB	Clear Accumulator	1	1	OA,OB,SA,SB
16	CLRWDT	CLRWDT	Clear Watchdog Timer	1	1	WDTO,Sleep
17	COM	COM f	$f = \overline{f}$	1	1	N,Z
		COM f,WREG	$WREG = \overline{f}$	1	1	N,Z
		COM Ws,Wd	$Wd = \overline{Ws}$	1	1	N,Z
18	CP	CP f	Compare f with WREG	1	1	C,DC,N,OV,Z
		CP Wb,#lit5	Compare Wb with lit5	1	1	C,DC,N,OV,Z
		CP Wb,Ws	Compare Wb with Ws (Wb – Ws)	1	1	C,DC,N,OV,Z
19	CP0	CP0 f	Compare f with 0x0000	1	1	C,DC,N,OV,Z
		CP0 Ws	Compare Ws with 0x0000	1	1	C,DC,N,OV,Z
20	CPB	CPB f	Compare f with WREG, with Borrow	1	1	C,DC,N,OV,Z
		CPB Wb,#lit5	Compare Wb with lit5, with Borrow	1	1	C,DC,N,OV,Z
		CPB Wb,Ws	Compare Wb with Ws, with Borrow ($Wb – Ws – \overline{C}$)	1	1	C,DC,N,OV,Z
21	CPSEQ	CPSEQ Wb, Wn	Compare Wb with Wn, skip if =	1	1 (2 or 3)	None
22	CPSGT	CPSGT Wb, Wn	Compare Wb with Wn, skip if >	1	1 (2 or 3)	None
23	CPSLT	CPSLT Wb, Wn	Compare Wb with Wn, skip if <	1	1 (2 or 3)	None
24	CPSNE	CPSNE Wb, Wn	Compare Wb with Wn, skip if ≠	1	1 (2 or 3)	None
25	DAW	DAW Wn	Wn = decimal adjust Wn	1	1	C
26	DEC	DEC f	f = f – 1	1	1	C,DC,N,OV,Z
		DEC f,WREG	WREG = f – 1	1	1	C,DC,N,OV,Z
		DEC Ws,Wd	Wd = Ws – 1	1	1	C,DC,N,OV,Z
27	DEC2	DEC2 f	f = f – 2	1	1	C,DC,N,OV,Z
		DEC2 f,WREG	WREG = f – 2	1	1	C,DC,N,OV,Z
		DEC2 Ws,Wd	Wd = Ws – 2	1	1	C,DC,N,OV,Z
28	DISI	DISI #lit14	Disable Interrupts for k instruction cycles	1	1	None

TABLE 24-2: INSTRUCTION SET OVERVIEW (CONTINUED)

Base Instr #	Assembly Mnemonic	Assembly Syntax	Description	# of Words	# of Cycles	Status Flags Affected
29	DIV	DIV.S Wm,Wn	Signed 16/16-bit Integer Divide	1	18	N,Z,C,OV
		DIV.SD Wm,Wn	Signed 32/16-bit Integer Divide	1	18	N,Z,C,OV
		DIV.U Wm,Wn	Unsigned 16/16-bit Integer Divide	1	18	N,Z,C,OV
		DIV.UD Wm,Wn	Unsigned 32/16-bit Integer Divide	1	18	N,Z,C,OV
30	DIVF	DIVF Wm,Wn	Signed 16/16-bit Fractional Divide	1	18	N,Z,C,OV
31	DO	DO #lit14,Expr	Do code to PC + Expr, lit14 + 1 times	2	2	None
		DO Wn,Expr	Do code to PC + Expr, (Wn) + 1 times	2	2	None
32	ED	ED Wm*Wm,Acc,Wx,Wy,Wxd	Euclidean Distance (no accumulate)	1	1	OA,OB,OAB, SA,SB,SAB
33	EDAC	EDAC Wm*Wm,Acc,Wx,Wy,Wxd	Euclidean Distance	1	1	OA,OB,OAB, SA,SB,SAB
34	EXCH	EXCH Wns,Wnd	Swap Wns with Wnd	1	1	None
35	FBCL	FBCL Ws,Wnd	Find Bit Change from Left (MSb) Side	1	1	C
36	FF1L	FF1L Ws,Wnd	Find First One from Left (MSb) Side	1	1	C
37	FF1R	FF1R Ws,Wnd	Find First One from Right (LSb) Side	1	1	C
38	GOTO	GOTO Expr	Go to address	2	2	None
		GOTO Wn	Go to indirect	1	2	None
39	INC	INC f	f = f + 1	1	1	C,DC,N,OV,Z
		INC f,WREG	WREG = f + 1	1	1	C,DC,N,OV,Z
		INC Ws,Wd	Wd = Ws + 1	1	1	C,DC,N,OV,Z
40	INC2	INC2 f	f = f + 2	1	1	C,DC,N,OV,Z
		INC2 f,WREG	WREG = f + 2	1	1	C,DC,N,OV,Z
		INC2 Ws,Wd	Wd = Ws + 2	1	1	C,DC,N,OV,Z
41	IOR	IOR f	f = f .IOR. WREG	1	1	N,Z
		IOR f,WREG	WREG = f .IOR. WREG	1	1	N,Z
		IOR #lit10,Wn	Wd = lit10 .IOR. Wd	1	1	N,Z
		IOR Wb,Ws,Wd	Wd = Wb .IOR. Ws	1	1	N,Z
		IOR Wb,#lit5,Wd	Wd = Wb .IOR. lit5	1	1	N,Z
42	LAC	LAC Wso,#Slit4,Acc	Load Accumulator	1	1	OA,OB,OAB, SA,SB,SAB
43	LNK	LNK #lit14	Link Frame Pointer	1	1	None
44	LSR	LSR f	f = Logical Right Shift f	1	1	C,N,OV,Z
		LSR f,WREG	WREG = Logical Right Shift f	1	1	C,N,OV,Z
		LSR Ws,Wd	Wd = Logical Right Shift Ws	1	1	C,N,OV,Z
		LSR Wb,Wns,Wnd	Wnd = Logical Right Shift Wb by Wns	1	1	N,Z
		LSR Wb,#lit5,Wnd	Wnd = Logical Right Shift Wb by lit5	1	1	N,Z
45	MAC	MAC Wm*Wn,Acc,Wx,Wxd,Wy,Wyd, AWB	Multiply and Accumulate	1	1	OA,OB,OAB, SA,SB,SAB
		MAC Wm*Wm,Acc,Wx,Wxd,Wy,Wyd	Square and Accumulate	1	1	OA,OB,OAB, SA,SB,SAB
46	MOV	MOV f,Wn	Move f to Wn	1	1	None
		MOV f	Move f to f	1	1	N,Z
		MOV f,WREG	Move f to WREG	1	1	None
		MOV #lit16,Wn	Move 16-bit literal to Wn	1	1	None
		MOV.b #lit8,Wn	Move 8-bit literal to Wn	1	1	None
		MOV Wn,f	Move Wn to f	1	1	None
		MOV Wso,Wdo	Move Ws to Wd	1	1	None
		MOV WREG,f	Move WREG to f	1	1	None
		MOV.D Wns,Wd	Move Double from W(ns):W(ns + 1) to Wd	1	2	None
		MOV.D Ws,Wnd	Move Double from Ws to W(nd + 1):W(nd)	1	2	None
47	MOVSAC	MOVSAC Acc,Wx,Wxd,Wy,Wyd,AWB	Prefetch and store accumulator	1	1	None

© 2011-2012 Microchip Technology Inc.

TABLE 24-2: INSTRUCTION SET OVERVIEW (CONTINUED)

Base Instr #	Assembly Mnemonic	Assembly Syntax	Description	# of Words	# of Cycles	Status Flags Affected
48	MPY	MPY Wm*Wn,Acc,Wx,Wxd,Wy,Wyd	Multiply Wm by Wn to Accumulator	1	1	OA,OB,OAB, SA,SB,SAB
		MPY Wm*Wm,Acc,Wx,Wxd,Wy,Wyd	Square Wm to Accumulator	1	1	OA,OB,OAB, SA,SB,SAB
49	MPY.N	MPY.N Wm*Wn,Acc,Wx,Wxd,Wy,Wyd	(Multiply Wm by Wn) to Accumulator	1	1	None
50	MSC	MSC Wm*Wm,Acc,Wx,Wxd,Wy,Wyd, AWB	Multiply and Subtract from Accumulator	1	1	OA,OB,OAB, SA,SB,SAB
51	MUL	MUL.SS Wb,Ws,Wnd	{Wnd + 1, Wnd} = signed(Wb) * signed(Ws)	1	1	None
		MUL.SU Wb,Ws,Wnd	{Wnd + 1, Wnd} = signed(Wb) * unsigned(Ws)	1	1	None
		MUL.US Wb,Ws,Wnd	{Wnd + 1, Wnd} = unsigned(Wb) * signed(Ws)	1	1	None
		MUL.UU Wb,Ws,Wnd	{Wnd + 1, Wnd} = unsigned(Wb) * unsigned(Ws)	1	1	None
		MUL.SU Wb,#lit5,Wnd	{Wnd + 1, Wnd} = signed(Wb) * unsigned(lit5)	1	1	None
		MUL.UU Wb,#lit5,Wnd	{Wnd + 1, Wnd} = unsigned(Wb) * unsigned(lit5)	1	1	None
		MUL f	W3:W2 = f * WREG	1	1	None
52	NEG	NEG Acc	Negate Accumulator	1	1	OA,OB,OAB, SA,SB,SAB
		NEG f	f = $\overline{f}$ + 1	1	1	C,DC,N,OV,Z
		NEG f,WREG	WREG = $\overline{f}$ + 1	1	1	C,DC,N,OV,Z
		NEG Ws,Wd	Wd = $\overline{Ws}$ + 1	1	1	C,DC,N,OV,Z
53	NOP	NOP	No Operation	1	1	None
		NOPR	No Operation	1	1	None
54	POP	POP f	Pop f from Top-of-Stack (TOS)	1	1	None
		POP Wdo	Pop from Top-of-Stack (TOS) to Wdo	1	1	None
		POP.D Wnd	Pop from Top-of-Stack (TOS) to W(nd):W(nd + 1)	1	2	None
		POP.S	Pop Shadow Registers	1	1	All
55	PUSH	PUSH f	Push f to Top-of-Stack (TOS)	1	1	None
		PUSH Wso	Push Wso to Top-of-Stack (TOS)	1	1	None
		PUSH.D Wns	Push W(ns):W(ns + 1) to Top-of-Stack (TOS)	1	2	None
		PUSH.S	Push Shadow Registers	1	1	None
56	PWRSAV	PWRSAV #lit1	Go into Sleep or Idle mode	1	1	WDTO,Sleep
57	RCALL	RCALL Expr	Relative Call	1	2	None
		RCALL Wn	Computed Call	1	2	None
58	REPEAT	REPEAT #lit14	Repeat Next Instruction lit14 + 1 times	1	1	None
		REPEAT Wn	Repeat Next Instruction (Wn) + 1 times	1	1	None
59	RESET	RESET	Software device Reset	1	1	None
60	RETFIE	RETFIE	Return from interrupt	1	3 (2)	None
61	RETLW	RETLW #lit10,Wn	Return with literal in Wn	1	3 (2)	None
62	RETURN	RETURN	Return from Subroutine	1	3 (2)	None
63	RLC	RLC f	f = Rotate Left through Carry f	1	1	C,N,Z
		RLC f,WREG	WREG = Rotate Left through Carry f	1	1	C,N,Z
		RLC Ws,Wd	Wd = Rotate Left through Carry Ws	1	1	C,N,Z
64	RLNC	RLNC f	f = Rotate Left (No Carry) f	1	1	N,Z
		RLNC f,WREG	WREG = Rotate Left (No Carry) f	1	1	N,Z
		RLNC Ws,Wd	Wd = Rotate Left (No Carry) Ws	1	1	N,Z
65	RRC	RRC f	f = Rotate Right through Carry f	1	1	C,N,Z
		RRC f,WREG	WREG = Rotate Right through Carry f	1	1	C,N,Z
		RRC Ws,Wd	Wd = Rotate Right through Carry Ws	1	1	C,N,Z

TABLE 24-2: INSTRUCTION SET OVERVIEW (CONTINUED)

Base Instr #	Assembly Mnemonic	Assembly Syntax		Description	# of Words	# of Cycles	Status Flags Affected
66	RRNC	RRNC	f	f = Rotate Right (No Carry) f	1	1	N,Z
		RRNC	f,WREG	WREG = Rotate Right (No Carry) f	1	1	N,Z
		RRNC	Ws,Wd	Wd = Rotate Right (No Carry) Ws	1	1	N,Z
67	SAC	SAC	Acc,#Slit4,Wdo	Store Accumulator	1	1	None
		SAC.R	Acc,#Slit4,Wdo	Store Rounded Accumulator	1	1	None
68	SE	SE	Ws,Wnd	Wnd = sign-extended Ws	1	1	C,N,Z
69	SETM	SETM	f	f = 0xFFFF	1	1	None
		SETM	WREG	WREG = 0xFFFF	1	1	None
		SETM	Ws	Ws = 0xFFFF	1	1	None
70	SFTAC	SFTAC	Acc,Wn	Arithmetic Shift Accumulator by (Wn)	1	1	OA,OB,OAB, SA,SB,SAB
		SFTAC	Acc,#Slit6	Arithmetic Shift Accumulator by Slit6	1	1	OA,OB,OAB, SA,SB,SAB
71	SL	SL	f	f = Left Shift f	1	1	C,N,OV,Z
		SL	f,WREG	WREG = Left Shift f	1	1	C,N,OV,Z
		SL	Ws,Wd	Wd = Left Shift Ws	1	1	C,N,OV,Z
		SL	Wb,Wns,Wnd	Wnd = Left Shift Wb by Wns	1	1	N,Z
		SL	Wb,#lit5,Wnd	Wnd = Left Shift Wb by lit5	1	1	N,Z
72	SUB	SUB	Acc	Subtract Accumulators	1	1	OA,OB,OAB, SA,SB,SAB
		SUB	f	f = f – WREG	1	1	C,DC,N,OV,Z
		SUB	f,WREG	WREG = f – WREG	1	1	C,DC,N,OV,Z
		SUB	#lit10,Wn	Wn = Wn – lit10	1	1	C,DC,N,OV,Z
		SUB	Wb,Ws,Wd	Wd = Wb – Ws	1	1	C,DC,N,OV,Z
		SUB	Wb,#lit5,Wd	Wd = Wb – lit5	1	1	C,DC,N,OV,Z
73	SUBB	SUBB	f	f = f – WREG – ($\overline{C}$)	1	1	C,DC,N,OV,Z
		SUBB	f,WREG	WREG = f – WREG – ($\overline{C}$)	1	1	C,DC,N,OV,Z
		SUBB	#lit10,Wn	Wn = Wn – lit10 – ($\overline{C}$)	1	1	C,DC,N,OV,Z
		SUBB	Wb,Ws,Wd	Wd = Wb – Ws – ($\overline{C}$)	1	1	C,DC,N,OV,Z
		SUBB	Wb,#lit5,Wd	Wd = Wb – lit5 – ($\overline{C}$)	1	1	C,DC,N,OV,Z
74	SUBR	SUBR	f	f = WREG – f	1	1	C,DC,N,OV,Z
		SUBR	f,WREG	WREG = WREG – f	1	1	C,DC,N,OV,Z
		SUBR	Wb,Ws,Wd	Wd = Ws – Wb	1	1	C,DC,N,OV,Z
		SUBR	Wb,#lit5,Wd	Wd = lit5 – Wb	1	1	C,DC,N,OV,Z
75	SUBBR	SUBBR	f	f = WREG – f – ($\overline{C}$)	1	1	C,DC,N,OV,Z
		SUBBR	f,WREG	WREG = WREG – f – ($\overline{C}$)	1	1	C,DC,N,OV,Z
		SUBBR	Wb,Ws,Wd	Wd = Ws – Wb – ($\overline{C}$)	1	1	C,DC,N,OV,Z
		SUBBR	Wb,#lit5,Wd	Wd = lit5 – Wb – ($\overline{C}$)	1	1	C,DC,N,OV,Z
76	SWAP	SWAP.b	Wn	Wn = nibble swap Wn	1	1	None
		SWAP	Wn	Wn = byte swap Wn	1	1	None
77	TBLRDH	TBLRDH	Ws,Wd	Read Prog<23:16> to Wd<7:0>	1	2	None
78	TBLRDL	TBLRDL	Ws,Wd	Read Prog<15:0> to Wd	1	2	None
79	TBLWTH	TBLWTH	Ws,Wd	Write Ws<7:0> to Prog<23:16>	1	2	None
80	TBLWTL	TBLWTL	Ws,Wd	Write Ws to Prog<15:0>	1	2	None
81	ULNK	ULNK		Unlink Frame Pointer	1	1	None
82	XOR	XOR	f	f = f .XOR. WREG	1	1	N,Z
		XOR	f,WREG	WREG = f .XOR. WREG	1	1	N,Z
		XOR	#lit10,Wn	Wd = lit10 .XOR. Wd	1	1	N,Z
		XOR	Wb,Ws,Wd	Wd = Wb .XOR. Ws	1	1	N,Z
		XOR	Wb,#lit5,Wd	Wd = Wb .XOR. lit5	1	1	N,Z
83	ZE	ZE	Ws,Wnd	Wnd = Zero-extend Ws	1	1	C,Z,N

© 2011-2012 Microchip Technology Inc.

25.0 DEVELOPMENT SUPPORT

The PIC® microcontrollers and dsPIC® Digital Signal Controllers are supported with a full range of software and hardware development tools:

- Integrated Development Environment
  - MPLAB® IDE Software
- Compilers/Assemblers/Linkers
  - MPLAB C Compiler for Various Device Families
  - HI-TECH C® for Various Device Families
  - MPASM™ Assembler
  - MPLINK™ Object Linker/ MPLIB™ Object Librarian
  - MPLAB Assembler/Linker/Librarian for Various Device Families
- Simulators
  - MPLAB SIM Software Simulator
- Emulators
  - MPLAB REAL ICE™ In-Circuit Emulator
- In-Circuit Debuggers
  - MPLAB ICD 3
  - PICkit™ 3 Debug Express
- Device Programmers
  - PICkit™ 2 Programmer
  - MPLAB PM3 Device Programmer
- Low-Cost Demonstration/Development Boards, Evaluation Kits, and Starter Kits

25.1 MPLAB Integrated Development Environment Software

The MPLAB IDE software brings an ease of software development previously unseen in the 8/16/32-bit microcontroller market. The MPLAB IDE is a Windows® operating system-based application that contains:

- A single graphical interface to all debugging tools
  - Simulator
  - Programmer (sold separately)
  - In-Circuit Emulator (sold separately)
  - In-Circuit Debugger (sold separately)
- A full-featured editor with color-coded context
- A multiple project manager
- Customizable data windows with direct edit of contents
- High-level source code debugging
- Mouse over variable inspection
- Drag and drop variables from source to watch windows
- Extensive on-line help
- Integration of select third party tools, such as IAR C Compilers

The MPLAB IDE allows you to:

- Edit your source files (either C or assembly)
- One-touch compile or assemble, and download to emulator and simulator tools (automatically updates all project information)
- Debug using:
  - Source files (C or assembly)
  - Mixed C and assembly
  - Machine code

MPLAB IDE supports multiple debugging tools in a single development paradigm, from the cost-effective simulators, through low-cost in-circuit debuggers, to full-featured emulators. This eliminates the learning curve when upgrading to tools with increased flexibility and power.

25.2 MPLAB C Compilers for Various Device Families

The MPLAB C Compiler code development systems are complete ANSI C compilers for Microchip's PIC18, PIC24 and PIC32 families of microcontrollers and the dsPIC30 and dsPIC33 families of Digital Signal Controllers. These compilers provide powerful integration capabilities, superior code optimization and ease of use.

For easy source level debugging, the compilers provide symbol information that is optimized to the MPLAB IDE debugger.

25.3 HI-TECH C for Various Device Families

The HI-TECH C Compiler code development systems are complete ANSI C compilers for Microchip's PIC family of microcontrollers and the dsPIC family of Digital Signal Controllers. These compilers provide powerful integration capabilities, omniscient code generation and ease of use.

For easy source level debugging, the compilers provide symbol information that is optimized to the MPLAB IDE debugger.

The compilers include a macro assembler, linker, preprocessor, and one-step driver, and can run on multiple platforms.

25.4 MPASM Assembler

The MPASM Assembler is a full-featured, universal macro assembler for PIC10/12/16/18 MCUs.

The MPASM Assembler generates relocatable object files for the MPLINK Object Linker, Intel® standard HEX files, MAP files to detail memory usage and symbol reference, absolute LST files that contain source lines and generated machine code and COFF files for debugging.

The MPASM Assembler features include:

- Integration into MPLAB IDE projects
- User-defined macros to streamline assembly code
- Conditional assembly for multi-purpose source files
- Directives that allow complete control over the assembly process

25.5 MPLINK Object Linker/ MPLIB Object Librarian

The MPLINK Object Linker combines relocatable objects created by the MPASM Assembler and the MPLAB C18 C Compiler. It can link relocatable objects from precompiled libraries, using directives from a linker script.

The MPLIB Object Librarian manages the creation and modification of library files of precompiled code. When a routine from a library is called from a source file, only the modules that contain that routine will be linked in with the application. This allows large libraries to be used efficiently in many different applications.

The object linker/library features include:

- Efficient linking of single libraries instead of many smaller files
- Enhanced code maintainability by grouping related modules together
- Flexible creation of libraries with easy module listing, replacement, deletion and extraction

25.6 MPLAB Assembler, Linker and Librarian for Various Device Families

MPLAB Assembler produces relocatable machine code from symbolic assembly language for PIC24, PIC32 and dsPIC devices. MPLAB C Compiler uses the assembler to produce its object file. The assembler generates relocatable object files that can then be archived or linked with other relocatable object files and archives to create an executable file. Notable features of the assembler include:

- Support for the entire device instruction set
- Support for fixed-point and floating-point data
- Command line interface
- Rich directive set
- Flexible macro language
- MPLAB IDE compatibility

© 2011-2012 Microchip Technology Inc.

25.7 MPLAB SIM Software Simulator

The MPLAB SIM Software Simulator allows code development in a PC-hosted environment by simulating the PIC MCUs and dsPIC® DSCs on an instruction level. On any given instruction, the data areas can be examined or modified and stimuli can be applied from a comprehensive stimulus controller. Registers can be logged to files for further run-time analysis. The trace buffer and logic analyzer display extend the power of the simulator to record and track program execution, actions on I/O, most peripherals and internal registers.

The MPLAB SIM Software Simulator fully supports symbolic debugging using the MPLAB C Compilers, and the MPASM and MPLAB Assemblers. The software simulator offers the flexibility to develop and debug code outside of the hardware laboratory environment, making it an excellent, economical software development tool.

25.8 MPLAB REAL ICE In-Circuit Emulator System

MPLAB REAL ICE In-Circuit Emulator System is Microchip's next generation high-speed emulator for Microchip Flash DSC and MCU devices. It debugs and programs PIC® Flash MCUs and dsPIC® Flash DSCs with the easy-to-use, powerful graphical user interface of the MPLAB Integrated Development Environment (IDE), included with each kit.

The emulator is connected to the design engineer's PC using a high-speed USB 2.0 interface and is connected to the target with either a connector compatible with in-circuit debugger systems (RJ11) or with the new high-speed, noise tolerant, Low-Voltage Differential Signal (LVDS) interconnection (CAT5).

The emulator is field upgradable through future firmware downloads in MPLAB IDE. In upcoming releases of MPLAB IDE, new devices will be supported, and new features will be added. MPLAB REAL ICE offers significant advantages over competitive emulators including low-cost, full-speed emulation, run-time variable watches, trace analysis, complex breakpoints, a ruggedized probe interface and long (up to three meters) interconnection cables.

25.9 MPLAB ICD 3 In-Circuit Debugger System

MPLAB ICD 3 In-Circuit Debugger System is Microchip's most cost effective high-speed hardware debugger/programmer for Microchip Flash Digital Signal Controller (DSC) and microcontroller (MCU) devices. It debugs and programs PIC® Flash microcontrollers and dsPIC® DSCs with the powerful, yet easy-to-use graphical user interface of MPLAB Integrated Development Environment (IDE).

The MPLAB ICD 3 In-Circuit Debugger probe is connected to the design engineer's PC using a high-speed USB 2.0 interface and is connected to the target with a connector compatible with the MPLAB REAL ICE systems (RJ-11).

25.10 PICkit 3 In-Circuit Debugger/ Programmer and PICkit 3 Debug Express

The MPLAB PICkit 3 allows debugging and programming of PIC® and dsPIC® Flash microcontrollers at a most affordable price point using the powerful graphical user interface of the MPLAB Integrated Development Environment (IDE). The MPLAB PICkit 3 is connected to the design engineer's PC using a full speed USB interface and can be connected to the target via an Microchip debug (RJ-11) connector (compatible with MPLAB ICD 3 and MPLAB REAL ICE). The connector uses two device I/O pins and the Reset line to implement in-circuit debugging and In-Circuit Serial Programming™.

The PICkit 3 Debug Express include the PICkit 3, demo board and microcontroller, hookup cables and CDROM with user's guide, lessons, tutorial, compiler and MPLAB IDE software.

25.11 PICkit 2 Development Programmer/Debugger and PICkit 2 Debug Express

The PICkit™ 2 Development Programmer/Debugger is a low-cost development tool with an easy to use interface for programming and debugging Microchip's Flash families of microcontrollers. The full featured Windows® programming interface supports baseline (PIC10F, PIC12F5xx, PIC16F5xx), midrange (PIC12F6xx, PIC16F), PIC18F, PIC24, dsPIC30, dsPIC33, and PIC32 families of 8-bit, 16-bit, and 32-bit microcontrollers, and many Microchip Serial EEPROM products. With Microchip's powerful MPLAB Integrated Development Environment (IDE) the PICkit™ 2 enables in-circuit debugging on most PIC® microcontrollers. In-Circuit-Debugging runs, halts and single steps the program while the PIC microcontroller is embedded in the application. When halted at a breakpoint, the file registers can be examined and modified.

The PICkit 2 Debug Express include the PICkit 2, demo board and microcontroller, hookup cables and CDROM with user's guide, lessons, tutorial, compiler and MPLAB IDE software.

25.12 MPLAB PM3 Device Programmer

The MPLAB PM3 Device Programmer is a universal, CE compliant device programmer with programmable voltage verification at V_{DDMIN} and V_{DDMAX} for maximum reliability. It features a large LCD display (128 x 64) for menus and error messages and a modular, detachable socket assembly to support various package types. The ICSP™ cable assembly is included as a standard item. In Stand-Alone mode, the MPLAB PM3 Device Programmer can read, verify and program PIC devices without a PC connection. It can also set code protection in this mode. The MPLAB PM3 connects to the host PC via an RS-232 or USB cable. The MPLAB PM3 has high-speed communications and optimized algorithms for quick programming of large memory devices and incorporates an MMC card for file storage and data applications.

25.13 Demonstration/Development Boards, Evaluation Kits, and Starter Kits

A wide variety of demonstration, development and evaluation boards for various PIC MCUs and dsPIC DSCs allows quick application development on fully functional systems. Most boards include prototyping areas for adding custom circuitry and provide application firmware and source code for examination and modification.

The boards support a variety of features, including LEDs, temperature sensors, switches, speakers, RS-232 interfaces, LCD displays, potentiometers and additional EEPROM memory.

The demonstration and development boards can be used in teaching environments, for prototyping custom circuits and for learning about various microcontroller applications.

In addition to the PICDEM™ and dsPICDEM™ demonstration/development board series of circuits, Microchip has a line of evaluation kits and demonstration software for analog filter design, KEELOQ® security ICs, CAN, IrDA®, PowerSmart battery management, SEEVAL® evaluation system, Sigma-Delta ADC, flow rate sensing, plus many more.

Also available are starter kits that contain everything needed to experience the specified device. This usually includes a single application and debug capability, all on one board.

Check the Microchip web page (www.microchip.com) for the complete list of demonstration, development and evaluation kits.

© 2011-2012 Microchip Technology Inc.

26.0 ELECTRICAL CHARACTERISTICS

This section provides an overview of the dsPIC33FJ16(GP/MC)101/102 and dsPIC33FJ32(GP/MC)101/102/104 electrical characteristics. Additional information will be provided in future revisions of this document as it becomes available.

Absolute maximum ratings for the dsPIC33FJ16(GP/MC)101/102 and dsPIC33FJ32(GP/MC)101/102/104 family are listed below. Exposure to these maximum rating conditions for extended periods may affect device reliability. Functional operation of the device at these, or any other conditions above the parameters indicated in the operation listings of this specification, is not implied.

Absolute Maximum Ratings(1)

Ambient temperature under bias ..... -40°C to +125°C
Storage temperature ..... -65°C to +150°C
Voltage on V_{DD} with respect to V_{SS} ..... -0.3V to +4.0V
Voltage on any pin that is not 5V tolerant with respect to V_{SS}(3) ..... -0.3V to (V_{DD} + 0.3V)
Voltage on any 5V tolerant pin with respect to V_{SS} when $V_{DD} \geq 3.0V$(3) ..... -0.3V to +5.6V
Voltage on any 5V tolerant pin with respect to V_{SS} when $V_{DD} < 3.0V$(3) ..... -0.3V to (V_{DD} + 0.3V)
Maximum current out of V_{SS} pin ..... 300 mA
Maximum current into V_{DD} pin(2) ..... 250 mA
Maximum output current sourced and sunk by any I/O pin excluding OSCO ..... 15 mA
Maximum output current sourced and sunk by OSCO ..... 25 mA
Maximum current sunk by all ports ..... 200 mA
Maximum current sourced by all ports(2) ..... 200 mA

Note 1: Stresses above those listed under “Absolute Maximum Ratings” may cause permanent damage to the device. This is a stress rating only, and functional operation of the device at those or any other conditions above those indicated in the operation listings of this specification is not implied. Exposure to maximum rating conditions for extended periods may affect device reliability.

2: Maximum allowable current is a function of the device maximum power dissipation (see Table 26-2).

3: See the **“Pin Diagrams”** section for 5V tolerant pins.

26.1 DC Characteristics

TABLE 26-1: OPERATING MIPS vs. VOLTAGE

Characteristic	V_{DD} Range (in Volts)	Temp Range (in °C)	Max MIPS
			dsPIC33FJ16(GP/MC)101/102 and dsPIC33FJ32(GP/MC)101/102/104
DC5	V_{BOR}-3.6V(1)	-40°C to +85°C	16
	V_{BOR}-3.6V(1)	-40°C to +125°C	16

Note 1: Overall functional device operation at $V_{BOR} < V_{DD} < V_{DDMIN}$ is ensured but not characterized. All device analog modules, such as the ADC, etc., will function but with degraded performance below V_{DDMIN}.

TABLE 26-2: THERMAL OPERATING CONDITIONS

Rating	Symbol	Min	Typ	Max	Unit
Industrial Temperature Devices					
Operating Junction Temperature Range	T_J	-40	—	+125	°C
Operating Ambient Temperature Range	T_A	-40	—	+85	°C
Extended Temperature Devices					
Operating Junction Temperature Range	T_J	-40	—	+140	°C
Operating Ambient Temperature Range	T_A	-40	—	+125	°C
Power Dissipation: Internal Chip Power Dissipation: $P_{INT} = V_{DD} \times (I_{DD} - \Sigma I_{OH})$ I/O Pin Power Dissipation: $I/O = \Sigma (\{V_{DD} - V_{OH}\} \times I_{OH}) + \Sigma (V_{OL} \times I_{OL})$	P_D	$P_{INT} + P_{IO}$			W
Maximum Allowed Power Dissipation	P_{DMAX}	$(T_J - T_A)/\theta_{JA}$			W

TABLE 26-3: THERMAL PACKAGING CHARACTERISTICS

Characteristic	Symbol	Typ	Max	Unit	Notes
Package Thermal Resistance, 18-pin PDIP	θ_{JA}	50	—	°C/W	1
Package Thermal Resistance, 20-pin PDIP	θ_{JA}	50	—	°C/W	1
Package Thermal Resistance, 28-pin SPDIP	θ_{JA}	50	—	°C/W	1
Package Thermal Resistance, 18-pin SOIC	θ_{JA}	63	—	°C/W	1
Package Thermal Resistance, 20-pin SOIC	θ_{JA}	63	—	°C/W	1
Package Thermal Resistance, 28-pin SOIC	θ_{JA}	55	—	°C/W	1
Package Thermal Resistance, 20-pin SSOP	θ_{JA}	90	—	°C/W	1
Package Thermal Resistance, 28-pin SSOP	θ_{JA}	71	—	°C/W	1
Package Thermal Resistance, 28-pin QFN (6x6 mm)	θ_{JA}	37	—	°C/W	1
Package Thermal Resistance, 36-pin VTLA (5x5 mm)	θ_{JA}	31.1	—	°C/W	1
Package Thermal Resistance, 44-pin TQFP	θ_{JA}	45	—	°C/W	1, 2
Package Thermal Resistance, 44-pin QFN	θ_{JA}	32	—	°C/W	1, 2
Package Thermal Resistance, 44-pin VTLA	θ_{JA}	30	—	°C/W	1, 2

Note 1: Junction to ambient thermal resistance; Theta-JA (θ_{JA}) numbers are achieved by package simulations.

2: This package is available in dsPIC33FJ32(GP/MC)104 devices only.

© 2011-2012 Microchip Technology Inc.

TABLE 26-4: DC TEMPERATURE AND VOLTAGE SPECIFICATIONS

DC CHARACTERISTICS			Standard Operating Conditions: 3.0V to 3.6V (unless otherwise stated) Operating temperature -40°C ≤ TA ≤ +85°C for Industrial -40°C ≤ TA ≤ +125°C for Extended				
Param No.	**Symbol**	**Characteristic**	**Min**	**Typ(1)**	**Max**	**Units**	**Conditions**
Operating Voltage							
DC10	**Supply Voltage(3)**						
	VDD	—	VBOR	—	3.6	V	Industrial and Extended
DC12	VDR	**RAM Data Retention Voltage(2)**	1.8	—	—	V	
DC16	VPOR	**VDD Start Voltage** to Ensure Internal Power-on Reset Signal	—	1.75	VSS	V	
DC17	SVDD	**VDD Rise Rate** to Ensure Internal Power-on Reset Signal	0.024	—	—	V/ms	0-2.4V in 0.1s

Note 1: Data in “Typ” column is at 3.3V, +25°C unless otherwise stated.

2: This is the limit to which VDD may be lowered without losing RAM data.

3: Overall functional device operation at VBOR < VDD < VDDMIN is ensured but not characterized. All device analog modules, such as the ADC, etc., will function but with degraded performance below VDDMIN.

TABLE 26-5: ELECTRICAL CHARACTERISTICS: BROWN-OUT RESET (BOR)

DC CHARACTERISTICS			Standard Operating Conditions: 3.0V to 3.6V (unless otherwise stated) Operating temperature -40°C ≤ TA ≤ +85°C for Industrial -40°C ≤ TA ≤ +125°C for Extended				
Param No.	**Symbol**	**Characteristic**	**Min(1)**	**Typ**	**Max**	**Units**	**Conditions**
BO10	VBOR	BOR Event on VDD Transition High-to-Low	2.40	2.48	2.55	V	See **Note 2**

Note 1: Parameters are for design guidance only and are not tested in manufacturing.

2: Overall functional device operation at VBOR < VDD < VDDMIN is ensured but not characterized. All device analog modules, such as the ADC, etc., will function but with degraded performance below VDDMIN.

TABLE 26-6: DC CHARACTERISTICS: OPERATING CURRENT (IDD)

DC CHARACTERISTICS			Standard Operating Conditions: 3.0V to 3.6V (unless otherwise stated) Operating temperature -40°C ≤ TA ≤ +85°C for Industrial -40°C ≤ TA ≤ +125°C for Extended			
Parameter No.	**Typical(1)**	**Max**	**Units**	**Conditions**		
Operating Current (IDD)(2) – dsPIC33FJ16(GP/MC)10X Devices						
DC20d	0.7	1.7	mA	-40°C	3.3V	LPRC (32.768 kHz)(3)
DC20a	0.7	1.7	mA	+25°C		
DC20b	1.0	1.7	mA	+85°C		
DC20c	1.3	1.7	mA	+125°C		
DC21d	1.9	2.6	mA	-40°C	3.3V	1 MIPS(3)
DC21a	1.9	2.6	mA	+25°C		
DC21b	1.9	2.6	mA	+85°C		
DC21c	2.0	2.6	mA	+125°C		
DC22d	6.5	8.5	mA	-40°C	3.3V	4 MIPS(3)
DC22a	6.5	8.5	mA	+25°C		
DC22b	6.5	8.5	mA	+85°C		
DC22c	6.5	8.5	mA	+125°C		
DC23d	12.2	16	mA	-40°C	3.3V	10 MIPS(3)
DC23a	12.2	16	mA	+25°C		
DC23b	12.2	16	mA	+85°C		
DC23c	12.2	16	mA	+125°C		
DC24d	16	21	mA	-40°C	3.3V	16 MIPS
DC24a	16	21	mA	+25°C		
DC24b	16	21	mA	+85°C		
DC24c	16	21	mA	+125°C		

Note 1: Data in “Typical” column is at 3.3V, +25°C unless otherwise stated.

2: IDD is primarily a function of the operating voltage and frequency. Other factors, such as I/O pin loading and switching rate, oscillator type, internal code execution pattern and temperature, also have an impact on the current consumption. The test conditions for all IDD measurements are as follows:

- Oscillator is configured in EC mode, OSC1 is driven with external square wave from rail-to-rail
- CLKO is configured as an I/O input pin in the Configuration Word
- All I/O pins are configured as inputs and pulled to VSS
- $\overline{\text{MCLR}}$ = VDD, WDT and FSCM are disabled
- CPU, SRAM, program memory and data memory are operational
- No peripheral modules are operating; however, every peripheral is being clocked (PMDx bits are all zeroed)
- CPU executing `while(1)` statement

3: These parameters are characterized, but not tested in manufacturing.

© 2011-2012 Microchip Technology Inc.

TABLE 26-6: DC CHARACTERISTICS: OPERATING CURRENT (IDD) (CONTINUED)

DC CHARACTERISTICS			Standard Operating Conditions: 3.0V to 3.6V (unless otherwise stated) Operating temperature -40°C ≤ TA ≤ +85°C for Industrial -40°C ≤ TA ≤ +125°C for Extended			
Parameter No.	**Typical(1)**	**Max**	**Units**	**Conditions**		
Operating Current (IDD)(2) – dsPIC33FJ32(GP/MC)10X Devices						
DC20d	1	2	mA	-40°C	3.3V	LPRC (32.768 kHz)(3)
DC20a	1	2	mA	+25°C		
DC20b	1.1	2	mA	+85°C		
DC20c	1.3	2	mA	+125°C		
DC21d	1.7	3	mA	-40°C	3.3V	1 MIPS(3)
DC21a	2.3	3	mA	+25°C		
DC21b	2.3	3	mA	+85°C		
DC21c	2.4	3	mA	+125°C		
DC22d	7	8.5	mA	-40°C	3.3V	4 MIPS(3)
DC22a	7	8.5	mA	+25°C		
DC22b	7	8.5	mA	+85°C		
DC22c	7	8.5	mA	+125°C		
DC23d	13.2	17	mA	-40°C	3.3V	10 MIPS(3)
DC23a	13.2	17	mA	+25°C		
DC23b	13.2	17	mA	+85°C		
DC23c	13.2	17	mA	+125°C		
DC24d	17	22	mA	-40°C	3.3V	16 MIPS
DC24a	17	22	mA	+25°C		
DC24b	17	22	mA	+85°C		
DC24c	17	22	mA	+125°C		

Note 1: Data in “Typical” column is at 3.3V, +25°C unless otherwise stated.

2: IDD is primarily a function of the operating voltage and frequency. Other factors, such as I/O pin loading and switching rate, oscillator type, internal code execution pattern and temperature, also have an impact on the current consumption. The test conditions for all IDD measurements are as follows:

- Oscillator is configured in EC mode, OSC1 is driven with external square wave from rail-to-rail
- CLKO is configured as an I/O input pin in the Configuration Word
- All I/O pins are configured as inputs and pulled to VSS
- $\overline{\text{MCLR}}$ = VDD, WDT and FSCM are disabled
- CPU, SRAM, program memory and data memory are operational
- No peripheral modules are operating; however, every peripheral is being clocked (PMDx bits are all zeroed)
- CPU executing `while(1)` statement

3: These parameters are characterized, but not tested in manufacturing.

TABLE 26-7: DC CHARACTERISTICS: IDLE CURRENT (IIDLE)

DC CHARACTERISTICS			Standard Operating Conditions: 3.0V to 3.6V (unless otherwise stated) Operating temperature -40°C ≤ TA ≤ +85°C for Industrial -40°C ≤ TA ≤ +125°C for Extended			
Parameter No.	**Typical(1)**	**Max**	**Units**	**Conditions**		
Idle Current (IIDLE): Core OFF, Clock ON Base Current(2) – dsPIC33FJ16(GP/MC)10X Devices						
DC40d	0.4	1.0	mA	-40°C	3.3V	LPRC (32.768 kHz)(3)
DC40a	0.4	1.0	mA	+25°C		
DC40b	0.4	1.0	mA	+85°C		
DC40c	0.5	1.0	mA	+125°C		
DC41d	0.5	1.1	mA	-40°C	3.3V	1 MIPS(3)
DC41a	0.5	1.1	mA	+25°C		
DC41b	0.5	1.1	mA	+85°C		
DC41c	0.8	1.1	mA	+125°C		
DC42d	0.9	1.6	mA	-40°C	3.3V	4 MIPS(3)
DC42a	0.9	1.6	mA	+25°C		
DC42b	1.0	1.6	mA	+85°C		
DC42c	1.2	1.6	mA	+125°C		
DC43a	1.6	2.6	mA	+25°C	3.3V	10 MIPS(3)
DC43d	1.6	2.6	mA	-40°C		
DC43b	1.7	2.6	mA	+85°C		
DC43c	2	2.6	mA	+125°C		
DC44d	2.4	3.8	mA	-40°C	3.3V	16 MIPS(3)
DC44a	2.4	3.8	mA	+25°C		
DC44b	2.6	3.8	mA	+85°C		
DC44c	2.9	3.8	mA	+125°C		

Note 1: Data in “Typical” column is at 3.3V, +25°C unless otherwise stated.

2: Base Idle current is measured as follows:

- CPU core is off, oscillator is configured in EC mode, OSC1 is driven with external square wave from rail-to-rail
- CLKO is configured as an I/O input pin in the Configuration Word
- External Secondary Oscillator (SOSC) is disabled (i.e., SOSCO and SOSCI pins are configured as digital I/O inputs)
- All I/O pins are configured as inputs and pulled to VSS
- $\overline{MCLR}$ = VDD, WDT and FSCM are disabled
- No peripheral modules are operating; however, every peripheral is being clocked (PMDx bits are all zeroed)

3: These parameters are characterized, but not tested in manufacturing.

© 2011-2012 Microchip Technology Inc.

TABLE 26-7: DC CHARACTERISTICS: IDLE CURRENT (IIDLE) (CONTINUED)

DC CHARACTERISTICS			Standard Operating Conditions: 3.0V to 3.6V (unless otherwise stated) Operating temperature -40°C ≤ TA ≤ +85°C for Industrial -40°C ≤ TA ≤ +125°C for Extended			
Parameter No.	**Typical(1)**	**Max**	**Units**	**Conditions**		
Idle Current (IIDLE): Core OFF, Clock ON Base Current(2) – dsPIC33FJ32(GP/MC)10X Devices						
DC40d	0.4	1.0	mA	-40°C	3.3V	LPRC (32.768 kHz)(3)
DC40a	0.4	1.0	mA	+25°C		
DC40b	0.4	1.0	mA	+85°C		
DC40c	0.5	1.0	mA	+125°C		
DC41d	0.5	1.1	mA	-40°C	3.3V	1 MIPS(3)
DC41a	0.5	1.1	mA	+25°C		
DC41b	0.5	1.1	mA	+85°C		
DC41c	0.8	1.1	mA	+125°C		
DC42d	0.9	1.6	mA	-40°C	3.3V	4 MIPS(3)
DC42a	0.9	1.6	mA	+25°C		
DC42b	1.0	1.6	mA	+85°C		
DC42c	1.2	1.6	mA	+125°C		
DC43a	1.6	2.6	mA	+25°C	3.3V	10 MIPS(3)
DC43d	1.6	2.6	mA	-40°C		
DC43b	1.7	2.6	mA	+85°C		
DC43c	2.0	2.6	mA	+125°C		
DC44d	2.4	3.8	mA	-40°C	3.3V	16 MIPS(3)
DC44a	2.4	3.8	mA	+25°C		
DC44b	2.6	3.8	mA	+85°C		
DC44c	2.9	3.8	mA	+125°C		

Note 1: Data in “Typical” column is at 3.3V, +25°C unless otherwise stated.

2: Base Idle current is measured as follows:

- CPU core is off, oscillator is configured in EC mode, OSC1 is driven with external square wave from rail-to-rail
- CLKO is configured as an I/O input pin in the Configuration Word
- External Secondary Oscillator (SOSC) is disabled (i.e., SOSCO and SOSCI pins are configured as digital I/O inputs)
- All I/O pins are configured as inputs and pulled to VSS
- $\overline{\text{MCLR}}$ = VDD, WDT and FSCM are disabled
- No peripheral modules are operating; however, every peripheral is being clocked (PMDx bits are all zeroed)

3: These parameters are characterized, but not tested in manufacturing.

TABLE 26-8: DC CHARACTERISTICS: POWER-DOWN CURRENT (IPD)

DC CHARACTERISTICS			Standard Operating Conditions: 3.0V to 3.6V (unless otherwise stated) Operating temperature -40°C ≤ TA ≤ +85°C for Industrial -40°C ≤ TA ≤ +125°C for Extended			
Parameter No.	**Typical(1)**	**Max**	**Units**	**Conditions**		
Power-Down Current (IPD)(2) – dsPIC33FJ16(GP/MC)10X Devices						
DC60d	27	250	μA	-40°C	3.3V	Base Power-Down Current(3,4)
DC60a	32	250	μA	+25°C		
DC60b	43	250	μA	+85°C		
DC60c	150	500	μA	+125°C		
DC61d	420	600	μA	-40°C	3.3V	Watchdog Timer Current: ΔIWDT(3,5)
DC61a	420	600	μA	+25°C		
DC61b	530	750	μA	+85°C		
DC61c	620	900	μA	+125°C		
Power-Down Current (IPD)(2) – dsPIC33FJ32(GP/MC)10X Devices						
DC60d	27	250	μA	-40°C	3.3V	Base Power-Down Current(3,4)
DC60a	32	250	μA	+25°C		
DC60b	43	250	μA	+85°C		
DC60c	150	500	μA	+125°C		
DC61d	420	600	μA	-40°C	3.3V	Watchdog Timer Current: ΔIWDT(3,5)
DC61a	420	600	μA	+25°C		
DC61b	530	750	μA	+85°C		
DC61c	620	900	μA	+125°C		

Note 1: Data in the Typical column is at 3.3V, +25°C unless otherwise stated.

2: IPD (Sleep) current is measured as follows:

- CPU core is off, oscillator is configured in EC mode, OSC1 is driven with external square wave from rail-to-rail
- CLKO is configured as an I/O input pin in the Configuration Word
- External Secondary Oscillator (SOSC) is disabled (i.e., SOSCO and SOSCI pins are configured as digital I/O inputs)
- All I/O pins are configured as inputs and pulled to VSS
- $\overline{MCLR}$ = VDD, WDT and FSCM are disabled
- All peripheral modules are disabled (PMDx bits are all ones)
- VREGS bit (RCON<8>) = 1 (i.e., core regulator is set to stand-by while the device is in Sleep mode)
- On applicable devices, RTCC is disabled, plus the VREGS bit (RCON<8>) = 1

3: The Δ current is the additional current consumed when the module is enabled. This current should be added to the base IPD current.

4: These currents are measured on the device containing the most memory in this family.

5: These parameters are characterized, but not tested in manufacturing.

© 2011-2012 Microchip Technology Inc.

TABLE 26-9: DC CHARACTERISTICS: DOZE CURRENT (IDOZE)

DC CHARACTERISTICS			Standard Operating Conditions: 3.0V to 3.6V (unless otherwise stated) Operating temperature -40°C ≤ TA ≤ +85°C for Industrial -40°C ≤ TA ≤ +125°C for Extended				
Parameter No.	**Typical(1)**	**Max**	**Doze Ratio(2)**	**Units**	**Conditions**		
Doze Current (IDOZE)(2) – dsPIC33FJ16(GP/MC)10X Devices							
DC73a	13.2	17.2	1:2	mA	-40°C	3.3V	16 MIPS
DC73f	4.7	6.2	1:64	mA			
DC73g	4.7	6.2	1:128	mA			
DC70a	13.2	17.2	1:2	mA	+25°C	3.3V	16 MIPS
DC70f	4.7	6.2	1:64	mA			
DC70g	4.7	6.2	1:128	mA			
DC71a	13.2	17.2	1:2	mA	+85°C	3.3V	16 MIPS
DC71f	4.7	6.2	1:64	mA			
DC71g	4.7	6.2	1:128	mA			
DC72a	13.2	17.2	1:2	mA	+125°C	3.3V	16 MIPS
DC72f	4.7	6.2	1:64	mA			
DC72g	4.7	6.2	1:128	mA			
Doze Current (IDOZE)(2) – dsPIC33FJ32(GP/MC)10X Devices							
DC73a	13.2	17.2	1:2	mA	-40°C	3.3V	16 MIPS
DC73f	4.7	6.2	1:64	mA			
DC73g	4.7	6.2	1:128	mA			
DC70a	13.2	17.2	1:2	mA	+25°C	3.3V	16 MIPS
DC70f	4.7	6.2	1:64	mA			
DC70g	4.7	6.2	1:128	mA			
DC71a	13.2	17.2	1:2	mA	+85°C	3.3V	16 MIPS
DC71f	4.7	6.2	1:64	mA			
DC71g	4.7	6.2	1:128	mA			
DC72a	13.2	17.2	1:2	mA	+125°C	3.3V	16 MIPS
DC72f	4.7	6.2	1:64	mA			
DC72g	4.7	6.2	1:128	mA			

Note 1: Data in the Typical column is at 3.3V, +25°C unless otherwise stated.

2: IDOZE is primarily a function of the operating voltage and frequency. Other factors, such as I/O pin loading and switching rate, oscillator type, internal code execution pattern and temperature, also have an impact on the current consumption. The test conditions for all IDOZE measurements are as follows:

- Oscillator is configured in EC mode, OSC1 is driven with external square wave from rail-to-rail
- CLKO is configured as an I/O input pin in the Configuration Word
- All I/O pins are configured as inputs and pulled to VSS
- $\overline{\text{MCLR}}$ = VDD, WDT and FSCM are disabled
- CPU, SRAM, program memory and data memory are operational
- No peripheral modules are operating; however, every peripheral is being clocked (PMDx bits are all zeroes)
- CPU executing `while(1)` statement

TABLE 26-10: DC CHARACTERISTICS: I/O PIN INPUT SPECIFICATIONS

DC CHARACTERISTICS			Standard Operating Conditions: 3.0V to 3.6V (unless otherwise stated) Operating temperature -40°C ≤ TA ≤ +85°C for Industrial -40°C ≤ TA ≤ +125°C for Extended				
Param No.	**Symbol**	**Characteristic**	**Min**	**Typ(1)**	**Max**	**Units**	**Conditions**
	VIL	**Input Low Voltage**					
DI10		I/O Pins	VSS	—	0.2 VDD	V	
DI15		$\overline{\text{MCLR}}$	VSS	—	0.2 VDD	V	
DI18		I/O Pins with SDAx, SCLx	VSS	—	0.3 VDD	V	SMBus disabled
DI19		I/O Pins with SDAx, SCLx	VSS	—	0.8	V	SMBus enabled
	VIH	**Input High Voltage**					
DI20		I/O Pins Not 5V Tolerant(4) I/O Pins 5V Tolerant(4)	0.7 VDD 0.7 VDD	— —	VDD 5.5	V V	
DI28		SDAx, SCLx	0.7 VDD	—	5.5	V	SMBus disabled
DI29		SDAx, SCLx	2.1	—	5.5	V	SMBus enabled
	ICNPU	**CNx Pull-up Current**					
DI30			50	250	450	μA	VDD = 3.3V, VPIN = VSS
	IIL	**Input Leakage Current(2,3)**					
DI50		I/O Pins 5V Tolerant(4)	—	—	±2	μA	VSS ≤ VPIN ≤ VDD, Pin at high-impedance
DI51		I/O Pins Not 5V Tolerant(4)	—	—	±1	μA	VSS ≤ VPIN ≤ VDD, Pin at high-impedance, -40°C ≤ TA ≤ +85°C
DI51a		I/O Pins Not 5V Tolerant(4)	—	—	±2	μA	Shared with external reference pins, -40°C ≤ TA ≤ +85°C
DI51b		I/O Pins Not 5V Tolerant(4)	—	—	±3.5	μA	VSS ≤ VPIN ≤ VDD, Pin at high-impedance, -40°C ≤ TA ≤ +125°C
DI51c		I/O Pins Not 5V Tolerant(4)	—	—	±8	μA	Analog pins shared with external reference pins, -40°C ≤ TA ≤ +125°C
DI55		$\overline{\text{MCLR}}$	—	—	±2	μA	VSS ≤ VPIN ≤ VDD
DI56		OSC1	—	—	±2	μA	VSS ≤ VPIN ≤ VDD, XT and HS modes

Note 1: Data in "Typ" column is at 3.3V, +25°C unless otherwise stated.

2: The leakage current on the $\overline{\text{MCLR}}$ pin is strongly dependent on the applied voltage level. The specified levels represent normal operating conditions. Higher leakage current can be measured at different input voltages.

3: Negative current is defined as current sourced by the pin.

4: See **"Pin Diagrams"** for the 5V tolerant I/O pins.

5: VIL source < (VSS – 0.3). Characterized but not tested.

6: Non-5V tolerant pins, VIH source > (VDD + 0.3), 5V tolerant pins, VIH source > 5.5V. Characterized but not tested.

7: Digital 5V tolerant pins cannot tolerate any "positive" input injection current from input sources > 5.5V.

8: Injection currents > | 0 | can affect the ADC results by approximately 4-6 counts.

9: Any number and/or combination of I/O pins, not excluded under IICL or IICH conditions, are permitted provided the mathematical "absolute instantaneous" sum of the input injection currents from all pins do not exceed the specified limit. Characterized but not tested.

© 2011-2012 Microchip Technology Inc.

TABLE 26-10: DC CHARACTERISTICS: I/O PIN INPUT SPECIFICATIONS (CONTINUED)

DC CHARACTERISTICS			Standard Operating Conditions: 3.0V to 3.6V (unless otherwise stated) Operating temperature -40°C ≤ TA ≤ +85°C for Industrial -40°C ≤ TA ≤ +125°C for Extended				
Param No.	**Symbol**	**Characteristic**	**Min**	**Typ(1)**	**Max**	**Units**	**Conditions**
DI60a	I_{ICL}	**Input Low Injection Current**	0	-5(5,8)	—	mA	All pins except V_{DD}, V_{SS}, AV_{DD}, AV_{SS}, $\overline{MCLR}$, V_{CAP}, SOSCI, SOSCO and RB14
DI60b	I_{ICH}	**Input High Injection Current**	0	+5(6,7,8)	—	mA	All pins except V_{DD}, V_{SS}, AV_{DD}, AV_{SS}, $\overline{MCLR}$, V_{CAP}, SOSCI, SOSCO, RB14 and digital 5V-tolerant designated pins
DI60c	$\sum I_{ICT}$	**Total Input Injection Current** (sum of all I/O and control pins)	-20(9)	+20(9)	—	mA	Absolute instantaneous sum of all ± input injection currents from all I/O pins, $(\lvert I_{ICL} + \lvert I_{ICH} \rvert) \leq \sum I_{ICT}$

Note 1: Data in "Typ" column is at 3.3V, +25°C unless otherwise stated.

2: The leakage current on the $\overline{MCLR}$ pin is strongly dependent on the applied voltage level. The specified levels represent normal operating conditions. Higher leakage current can be measured at different input voltages.

3: Negative current is defined as current sourced by the pin.

4: See **"Pin Diagrams"** for the 5V tolerant I/O pins.

5: V_{IL} source < (V_{SS} – 0.3). Characterized but not tested.

6: Non-5V tolerant pins, V_{IH} source > (V_{DD} + 0.3), 5V tolerant pins, V_{IH} source > 5.5V. Characterized but not tested.

7: Digital 5V tolerant pins cannot tolerate any "positive" input injection current from input sources > 5.5V.

8: Injection currents > | 0 | can affect the ADC results by approximately 4-6 counts.

9: Any number and/or combination of I/O pins, not excluded under I_{ICL} or I_{ICH} conditions, are permitted provided the mathematical "absolute instantaneous" sum of the input injection currents from all pins do not exceed the specified limit. Characterized but not tested.

TABLE 26-11: DC CHARACTERISTICS: I/O PIN OUTPUT SPECIFICATIONS

DC CHARACTERISTICS			Standard Operating Conditions: 3.0V to 3.6V (unless otherwise stated) Operating temperature -40°C ≤ TA ≤ +85°C for Industrial -40°C ≤ TA ≤ +125°C for Extended				
Param No.	**Symbol**	**Characteristic**	**Min**	**Typ(1)**	**Max**	**Units**	**Conditions**
DO10	VOL	**Output Low Voltage** I/O Pins: 4x Sink Driver Pins – All pins excluding OSCO	—	—	0.4	V	IOL ≤ 6 mA, VDD = 3.3V See **Note 1**
		Output Low Voltage I/O Pins: 8x Sink Driver Pins – OSCO	—	—	0.4	V	IOL ≤ 10 mA, VDD = 3.3V See **Note 1**
DO20	VOH	**Output High Voltage** I/O Pins: 4x Source Driver Pins – All pins excluding OSCO	2.4	—	—	V	IOL ≥ -6 mA, VDD = 3.3V See **Note 1**
		Output High Voltage I/O Pins: 8x Source Driver Pins – OSCO	2.4	—	—	V	IOL ≥ -10 mA, VDD = 3.3V See **Note 1**
DO20A	VOH1	**Output High Voltage** I/O Pins: 4x Source Driver Pins – All pins excluding OSCO	1.5	—	—	V	IOH ≥ -12 mA, VDD = 3.3V See **Note 1**
			2.0	—	—		IOH ≥ -11 mA, VDD = 3.3V See **Note 1**
			3.0	—	—		IOH ≥ -3 mA, VDD = 3.3V See **Note 1**
		Output High Voltage I/O Pins: 8x Source Driver Pins – OSCO	1.5	—	—	V	IOH ≥ -16 mA, VDD = 3.3V See **Note 1**
			2.0	—	—		IOH ≥ -12 mA, VDD = 3.3V See **Note 1**
			3.0	—	—		IOH ≥ -4 mA, VDD = 3.3V See **Note 1**

Note 1: Data in “Typ” column is at 3.3V, +25°C unless otherwise stated.

© 2011-2012 Microchip Technology Inc.

TABLE 26-12: DC CHARACTERISTICS: PROGRAM MEMORY

DC CHARACTERISTICS			Standard Operating Conditions: 3.0V to 3.6V (unless otherwise stated) Operating temperature -40°C ≤ TA ≤ +85°C for Industrial -40°C ≤ TA ≤ +125°C for Extended				
Param No.	**Symbol**	**Characteristic(3)**	**Min**	**Typ(1)**	**Max**	**Units**	**Conditions**
		Program Flash Memory					
D130a	EP	Cell Endurance	10,000	—	—	E/W	-40°C to +125°C
D131	VPR	VDD for Read	VMIN	—	3.6	V	VMIN = Minimum operating voltage
D132B	VPEW	VDD for Self-Timed Write	VMIN	—	3.6	V	VMIN = Minimum operating voltage
D134	TRETD	Characteristic Retention	20	—	—	Year	Provided no other specifications are violated
D135	IDDP	Supply Current during Programming	—	10	—	mA	
D137a	TPE	Page Erase Time	20.1	—	26.5	ms	TPE = 168517 FRC cycles, TA = +85°C, See **Note 2**
D137b	TPE	Page Erase Time	19.5	—	27.3	ms	TPE = 168517 FRC cycles, TA = +125°C, See **Note 2**
D138a	TWW	Word Write Cycle Time	47.4	—	49.3	µs	TWW = 355 FRC cycles, TA = +85°C, See **Note 2**
D138b	TWW	Word Write Cycle Time	47.4	—	49.3	µs	TWW = 355 FRC cycles, TA = +125°C, See **Note 2**

Note 1: Data in "Typ" column is at 3.3V, +25°C unless otherwise stated.

2: Other conditions: FRC = 7.37 MHz, TUN<5:0> = `b'011111` (for Min), TUN<5:0> = `b'100000` (for Max). This parameter depends on the FRC accuracy (see Table 26-18) and the value of the FRC Oscillator Tuning register (see Register 8-3). For complete details on calculating the Minimum and Maximum time, see **Section 5.3 "Programming Operations"**.

3: These parameters are ensured by design, but are not characterized or tested in manufacturing.

TABLE 26-13: INTERNAL VOLTAGE REGULATOR SPECIFICATIONS

DC CHARACTERISTICS			Standard Operating Conditions: 3.0V to 3.6V (unless otherwise stated) Operating temperature -40°C ≤ TA ≤ +85°C for Industrial -40°C ≤ TA ≤ +125°C for Extended				
Param No.	**Symbol**	**Characteristics**	**Min**	**Typ**	**Max**	**Units**	**Comments**
—	CEFC	External Filter Capacitor Value(1)	4.7	10	—	µF	Capacitor must be low series resistance (< 5 ohms)

Note 1: Typical VCAP voltage = 2.5V when VDD ≥ VDDMIN.

26.2 AC Characteristics and Timing Parameters

This section defines dsPIC33FJ16(GP/MC)101/102 and dsPIC33FJ32(GP/MC)101/102/104 AC characteristics and timing parameters.

TABLE 26-14: TEMPERATURE AND VOLTAGE SPECIFICATIONS – AC

AC CHARACTERISTICS	**Standard Operating Conditions: 3.0V to 3.6V (unless otherwise stated)** Operating temperature -40°C ≤ TA ≤ +85°C for Industrial -40°C ≤ TA ≤ +125°C for Extended Operating voltage VDD range as described in **Section 26.1 "DC Characteristics"**.

FIGURE 26-1: LOAD CONDITIONS FOR DEVICE TIMING SPECIFICATIONS

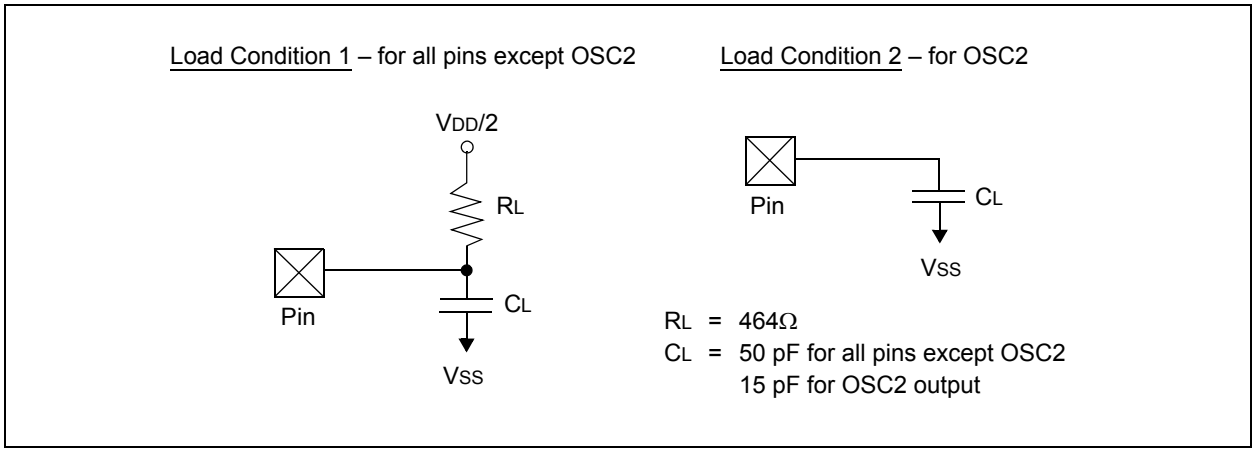

TABLE 26-15: CAPACITIVE LOADING REQUIREMENTS ON OUTPUT PINS

Param No.	Symbol	Characteristic	Min	Typ	Max	Units	Conditions
DO50	COSC2	OSC2/SOSC2 Pin	—	—	15	pF	In MS and HS modes when external clock is used to drive OSC1
DO56	CIO	All I/O Pins and OSC2	—	—	50	pF	EC mode
DO58	CB	SCLx, SDAx	—	—	400	pF	In I²C™ mode

© 2011-2012 Microchip Technology Inc.

FIGURE 26-2: EXTERNAL CLOCK TIMING

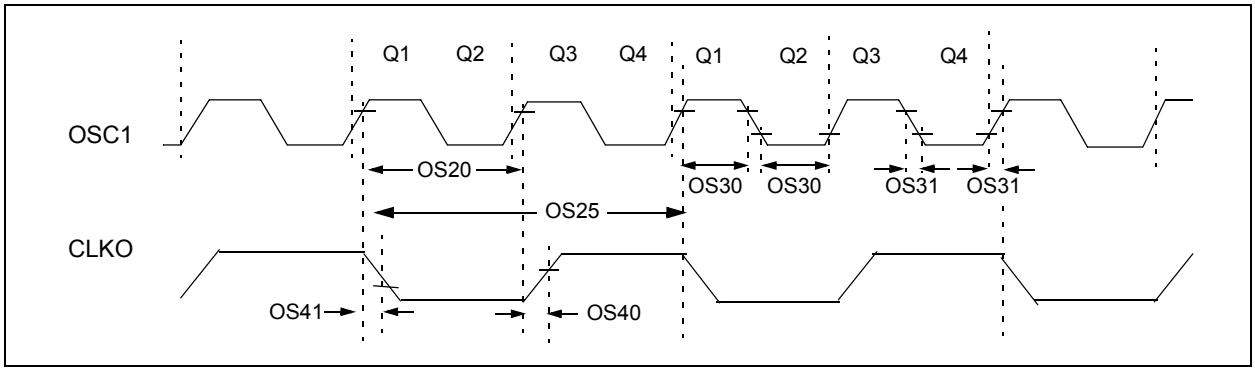

TABLE 26-16: EXTERNAL CLOCK TIMING REQUIREMENTS

AC CHARACTERISTICS			Standard Operating Conditions: 3.0V to 3.6V (unless otherwise stated) Operating temperature -40°C ≤ TA ≤ +85°C for Industrial -40°C ≤ TA ≤ +125°C for Extended				
Param No.	**Symb**	**Characteristic**	**Min**	**Typ(1)**	**Max**	**Units**	**Conditions**
OS10	FIN	External CLKI Frequency (External clocks allowed only in EC and ECPLL modes)	DC	—	32	MHz	EC
		Oscillator Crystal Frequency	3.0 10 31	— — —	10 32 33	MHz MHz kHz	MS HS SOSC
OS20	TOSC	TOSC = 1/FOSC	31.25	—	DC	ns	
OS25	TCY	Instruction Cycle Time(2,4)	62.5	—	DC	ns	
OS30	TosL, TosH	External Clock in (OSC1)(5) High or Low Time	0.45 x TOSC	—	—	ns	EC
OS31	TosR, TosF	External Clock in (OSC1)(5) Rise or Fall Time	—	—	20	ns	EC
OS40	TckR	CLKO Rise Time(3,5)	—	6	10	ns	
OS41	TckF	CLKO Fall Time(3,5)	—	6	10	ns	
OS42	GM	External Oscillator Transconductance(4)	14	16	18	mA/V	VDD = 3.3V, TA = +25ºC

Note 1: Data in “Typ” column is at 3.3V, +25°C unless otherwise stated.

2: Instruction cycle period (TCY) equals two times the input oscillator time base period. All specified values are based on characterization data for that particular oscillator type, under standard operating conditions, with the device executing code. Exceeding these specified limits may result in an unstable oscillator operation and/or higher than expected current consumption. All devices are tested to operate at “min.” values with an external clock applied to the OSC1/CLKI pin. When an external clock input is used, the “max.” cycle time limit is “DC” (no clock) for all devices.

3: Measurements are taken in EC mode. The CLKO signal is measured on the OSC2 pin.

4: These parameters are characterized by similarity, but are tested in manufacturing at FIN = 32 MHz only.

5: These parameters are characterized by similarity, but are not tested in manufacturing.

TABLE 26-17: PLL CLOCK TIMING SPECIFICATIONS

AC CHARACTERISTICS			Standard Operating Conditions: 3.0V to 3.6V (unless otherwise stated) Operating temperature -40°C ≤ TA ≤ +85°C for Industrial -40°C ≤ TA ≤ +125°C for Extended				
Param No.	**Symbol**	**Characteristic**	**Min**	**Typ(1)**	**Max**	**Units**	**Conditions**
OS50	FPLLI	PLL Voltage Controlled Oscillator (VCO) Input Frequency Range(2)	3.0	—	8	MHz	ECPLL and MSPLL modes
OS51	FSYS	On-Chip VCO System Frequency(3)	12	—	32	MHz	
OS52	TLOCK	PLL Start-up Time (Lock Time)(3)	—	—	2	mS	
OS53	DCLK	CLKO Stability (Jitter)(3)	-2	1	+2	%	

Note 1: Data in "Typ" column is at 3.3V, +25°C unless otherwise stated. Parameters are for design guidance only and are not tested.

2: These parameters are characterized by similarity, but are tested in manufacturing at 7.7 MHz input only.

3: These parameters are characterized by similarity, but are not tested in manufacturing. This specification is based on clock cycle by clock cycle measurements. The effective jitter for individual time bases, or communication clocks used by the user application, are derived from dividing the CLKO stability specification by the square root of "N" (where "N" is equal to FOSC, divided by the peripheral data rate clock). For example, if FOSC = 32 MHz and the SPI bit rate is 5 MHz, the effective jitter of the SPI clock is equal to:

$$\frac{D_{CLK}}{\sqrt{\frac{32}{5}}} = \frac{2\%}{2.53} = 0.79\%$$

TABLE 26-18: AC CHARACTERISTICS: INTERNAL FAST RC (FRC) ACCURACY

AC CHARACTERISTICS		Standard Operating Conditions: 3.0V to 3.6V (unless otherwise stated) Operating temperature -40°C ≤ TA ≤ +85°C for Industrial -40°C ≤ TA ≤ +125°C for Extended				
Param No.	**Characteristic**	**Min**	**Typ**	**Max**	**Units**	**Conditions**
	Internal FRC Accuracy @ 7.3728 MHz(1)					
F20a	FRC	-1.5	±0.25	+1.5	%	-40°C ≤ TA ≤ -10°C
F20b	FRC	-1	±0.25	+1	%	-10°C ≤ TA ≤ +85°C
F20c	FRC	-2	±0.25	+2	%	+125°C

Note 1: Frequency is calibrated at +25°C and 3.3V. TUNx bits may be used to compensate for temperature drift.

TABLE 26-19: INTERNAL LOW-POWER RC (LPRC) ACCURACY

AC CHARACTERISTICS		Standard Operating Conditions: 3.0V to 3.6V (unless otherwise stated) Operating temperature -40°C ≤ TA ≤ +85°C for Industrial -40°C ≤ TA ≤ +125°C for Extended				
Param No.	**Characteristic**	**Min**	**Typ**	**Max**	**Units**	**Conditions**
	LPRC @ 32.768 kHz(1,2)					
F21a	LPRC	-20	±10	+20	%	-40°C ≤ TA ≤ +85°C
F21b	LPRC	-30	±10	+30	%	-40°C ≤ TA ≤ +125°C

Note 1: Change of LPRC frequency as VDD changes.

2: LPRC accuracy impacts the Watchdog Timer Time-out Period (TWDT1). See **Section 23.4 "Watchdog Timer (WDT)"** for more information.

© 2011-2012 Microchip Technology Inc.

FIGURE 26-3: CLKO AND I/O TIMING CHARACTERISTICS

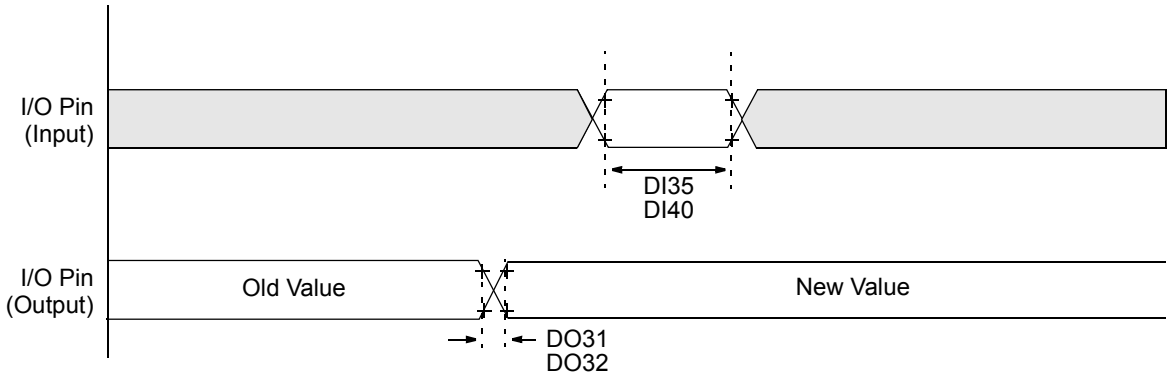

Note: Refer to Figure 26-1 for load conditions.

TABLE 26-20: I/O TIMING REQUIREMENTS

AC CHARACTERISTICS			Standard Operating Conditions: 3.0V to 3.6V (unless otherwise stated) Operating temperature -40°C ≤ TA ≤ +85°C for Industrial -40°C ≤ TA ≤ +125°C for Extended				
Param No.	**Symbol**	**Characteristic(2)**	**Min**	**Typ(1)**	**Max**	**Units**	**Conditions**
DO31	TIOR	Port Output Rise Time	—	10	25	ns	
DO32	TIOF	Port Output Fall Time	—	10	25	ns	
DI35	TINP	INTx Pin High or Low Time (input)	25	—	—	ns	
DI40	TRBP	CNx High or Low Time (input)	2	—	—	TCY	

Note 1: Data in “Typ” column is at 3.3V, +25°C unless otherwise stated.

2: These parameters are characterized, but are not tested in manufacturing.

FIGURE 26-4: RESET, WATCHDOG TIMER, OSCILLATOR START-UP TIMER AND POWER-UP TIMER TIMING CHARACTERISTICS

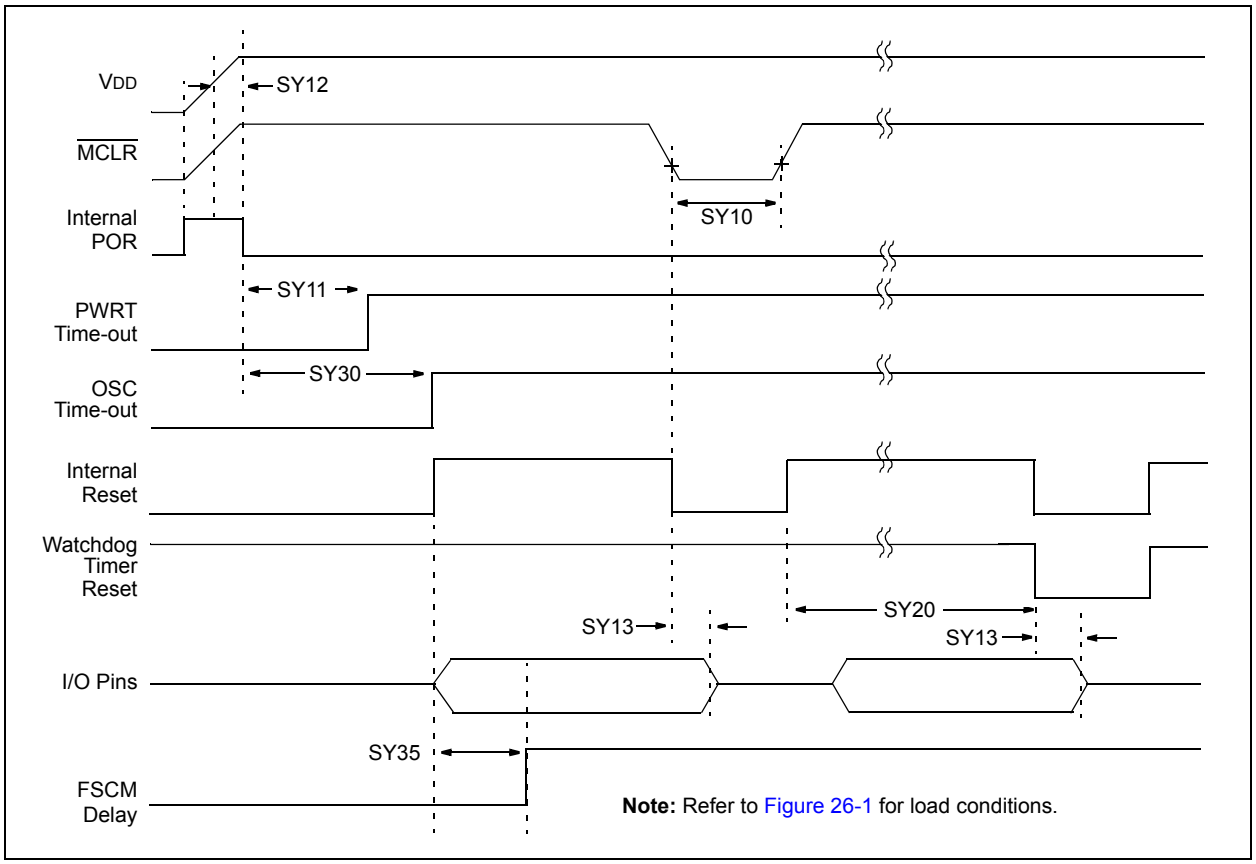

TABLE 26-21: RESET, WATCHDOG TIMER, OSCILLATOR START-UP TIMER, POWER-UP TIMER AND BROWN-OUT RESET TIMING REQUIREMENTS

AC CHARACTERISTICS			Standard Operating Conditions: 3.0V to 3.6V (unless otherwise stated) Operating temperature -40°C ≤ TA ≤ +85°C for Industrial -40°C ≤ TA ≤ +125°C for Extended				
Param No.	**Symb**	**Characteristic(1)**	**Min**	**Typ(2)**	**Max**	**Units**	**Conditions**
SY10	TMCL	$\overline{\text{MCLR}}$ Pulse Width (low)	2	—	—	μs	
SY11	TPWRT	Power-up Timer Period	—	64	—	ms	
SY12	TPOR	Power-on Reset Delay	3	10	30	μs	
SY13	TIOZ	I/O High-Impedance from $\overline{\text{MCLR}}$ Low or Watchdog Timer Reset	—	—	1.2	μs	
SY20	TWDT1	Watchdog Timer Time-out Period	—	—	—	ms	See **Section 23.4 "Watchdog Timer (WDT)"** and LPRC Parameter F21a (Table 26-19).
SY30	TOST	Oscillator Start-up Time	—	1024 * TOSC	—	—	TOSC = OSC1 period
SY35	TFSCM	Fail-Safe Clock Monitor Delay	—	500	900	μs	

Note 1: These parameters are characterized but are not tested in manufacturing.
2: Data in "Typ" column is at 3.3V, +25°C unless otherwise stated.

© 2011-2012 Microchip Technology Inc.

FIGURE 26-5: TIMER1, 2 AND 3 EXTERNAL CLOCK TIMING CHARACTERISTICS

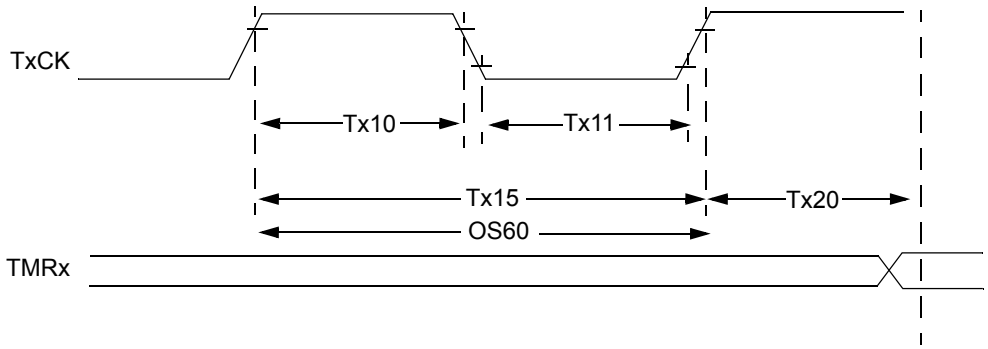

Note: Refer to Figure 26-1 for load conditions.

TABLE 26-22: TIMER1 EXTERNAL CLOCK TIMING REQUIREMENTS(1)

AC CHARACTERISTICS				Standard Operating Conditions: 3.0V to 3.6V (unless otherwise stated) Operating temperature -40°C ≤ TA ≤ +85°C for Industrial -40°C ≤ TA ≤ +125°C for Extended				
Param No.	**Symbol**	**Characteristic(2)**		**Min**	**Typ**	**Max**	**Units**	**Conditions**
TA10	TTXH	T1CK High Time	Synchronous mode	Greater of: 20 or (TCY + 20)/N	—	—	ns	Must also meet Parameter TA15, N = prescaler value (1, 8, 64, 256)
			Asynchronous	35	—	—	ns	
TA11	TTXL	T1CK Low Time	Synchronous mode	Greater of: 20 ns or (TCY + 20)/N	—	—	ns	Must also meet Parameter TA15, N = prescaler value (1, 8, 64, 256)
			Asynchronous	10	—	—	ns	
TA15	TTXP	T1CK Input Period	Synchronous mode	Greater of: 40 or (2 TCY + 40)/N	—	—	ns	N = prescale value (1, 8, 64, 256)
OS60	Ft1	SOSC1/T1CK Oscillator Input Frequency Range (oscillator enabled by setting bit, TCS (T1CON<1>))		DC	—	50	kHz	
TA20	TCKEXTMRL	Delay from External T1CK Clock Edge to Timer Increment		0.75 TCY + 40	—	1.75 TCY + 40	ns	

Note 1: Timer1 is a Type A.

2: These parameters are characterized by similarity, but are not tested in manufacturing.

TABLE 26-23: TIMER2/4 EXTERNAL CLOCK TIMING REQUIREMENTS

AC CHARACTERISTICS				Standard Operating Conditions: 3.0V to 3.6V (unless otherwise stated) Operating temperature -40°C ≤ TA ≤ +85°C for Industrial -40°C ≤ TA ≤ +125°C for Extended				
Param No.	**Symbol**	**Characteristic[1]**		**Min**	**Typ**	**Max**	**Units**	**Conditions**
TB10	TtxH	TxCK High Time	Synchronous mode	Greater of: 20 or (TCY + 20)/N	—	—	ns	Must also meet Parameter TB15, N = prescale value (1, 8, 64, 256)
TB11	TtxL	TxCK Low Time	Synchronous mode	Greater of: 20 or (TCY + 20)/N	—	—	ns	Must also meet Parameter TB15, N = prescale value (1, 8, 64, 256)
TB15	TtxP	TxCK Input Period	Synchronous mode	Greater of: 40 or (2 TCY + 40)/N	—	—	ns	N = prescale value (1, 8, 64, 256)
TB20	TCKEXTMRL	Delay from External TxCK Clock Edge to Timer Increment		0.75 TCY + 40	—	1.75 TCY + 40	ns	

Note 1: These parameters are characterized, but are not tested in manufacturing.

TABLE 26-24: TIMER3/5 EXTERNAL CLOCK TIMING REQUIREMENTS

AC CHARACTERISTICS				Standard Operating Conditions: 3.0V to 3.6V (unless otherwise stated) Operating temperature -40°C ≤ TA ≤ +85°C for Industrial -40°C ≤ TA ≤ +125°C for Extended				
Param No.	**Symbol**	**Characteristic[1]**		**Min**	**Typ**	**Max**	**Units**	**Conditions**
TC10	TtxH	TxCK High Time	Synchronous	TCY + 20	—	—	ns	Must also meet Parameter TC15
TC11	TtxL	TxCK Low Time	Synchronous	TCY + 20	—	—	ns	Must also meet Parameter TC15
TC15	TtxP	TxCK Input Period	Synchronous, with prescaler	2 TCY + 40	—	—	ns	N = prescale value (1, 8, 64, 256)
TC20	TCKEXTMRL	Delay from External TxCK Clock Edge to Timer Increment		0.75 TCY + 40	—	1.75 TCY + 40	ns	

Note 1: These parameters are characterized, but are not tested in manufacturing.

© 2011-2012 Microchip Technology Inc.

FIGURE 26-6: INPUT CAPTURE x (ICx) TIMING CHARACTERISTICS

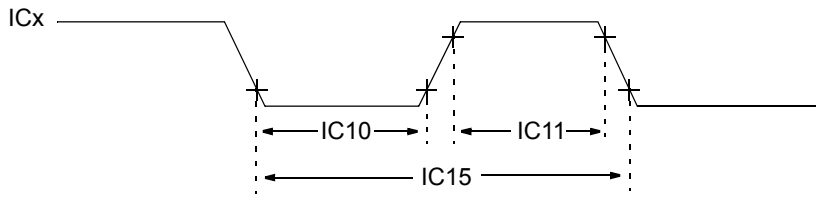

Note: Refer to Figure 26-1 for load conditions.

TABLE 26-25: INPUT CAPTURE x (ICx) TIMING REQUIREMENTS

AC CHARACTERISTICS				Standard Operating Conditions: 3.0V to 3.6V (unless otherwise stated) Operating temperature -40°C ≤ TA ≤ +85°C for Industrial -40°C ≤ TA ≤ +125°C for Extended			
Param No.	**Symbol**	**Characteristic(1)**		**Min**	**Max**	**Units**	**Conditions**
IC10	TccL	ICx Input Low Time	No Prescaler	0.5 TCY + 20	—	ns	
			With Prescaler	10	—	ns	
IC11	TccH	ICx Input High Time	No Prescaler	0.5 TCY + 20	—	ns	
			With Prescaler	10	—	ns	
IC15	TccP	ICx Input Period		(TCY + 40)/N	—	ns	N = prescale value (1, 4, 16)

Note 1: These parameters are characterized by similarity, but are not tested in manufacturing.

FIGURE 26-7: OUTPUT COMPARE x MODULE (OCx) TIMING CHARACTERISTICS

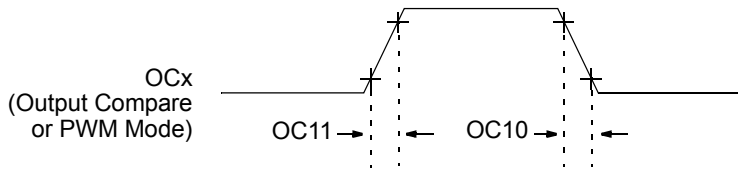

Note: Refer to Figure 26-1 for load conditions.

TABLE 26-26: OUTPUT COMPARE x (OCx) MODULE TIMING REQUIREMENTS

AC CHARACTERISTICS			Standard Operating Conditions: 3.0V to 3.6V (unless otherwise stated) Operating temperature -40°C ≤ TA ≤ +85°C for Industrial -40°C ≤ TA ≤ +125°C for Extended				
Param No.	**Symbol**	**Characteristic(1)**	**Min**	**Typ**	**Max**	**Units**	**Conditions**
OC10	TccF	OCx Output Fall Time	—	—	—	ns	See Parameter DO32
OC11	TccR	OCx Output Rise Time	—	—	—	ns	See Parameter DO31

Note 1: These parameters are characterized by similarity, but are not tested in manufacturing.

FIGURE 26-8: OCx/PWM MODULE TIMING CHARACTERISTICS

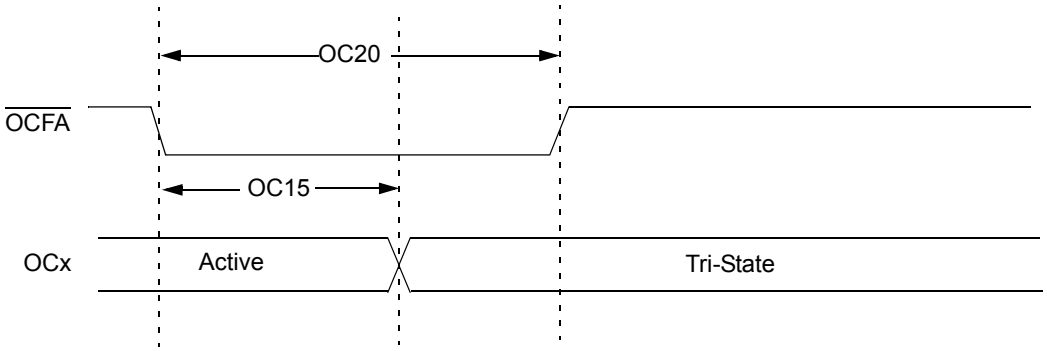

TABLE 26-27: SIMPLE OCx/PWM MODE TIMING REQUIREMENTS

AC CHARACTERISTICS			Standard Operating Conditions: 3.0V to 3.6V (unless otherwise stated) Operating temperature -40°C ≤ TA ≤ +85°C for Industrial -40°C ≤ TA ≤ +125°C for Extended				
Param No.	**Symbol**	**Characteristic(1)**	**Min**	**Typ**	**Max**	**Units**	**Conditions**
OC15	TFD	Fault Input to PWM I/O Change	—	—	TCY + 20 ns	ns	
OC20	TFLT	Fault Input Pulse Width	TCY + 20 ns	—	—	ns	

Note 1: These parameters are characterized by similarity, but are not tested in manufacturing.

© 2011-2012 Microchip Technology Inc.

FIGURE 26-9: MOTOR CONTROL PWM MODULE FAULT TIMING CHARACTERISTICS

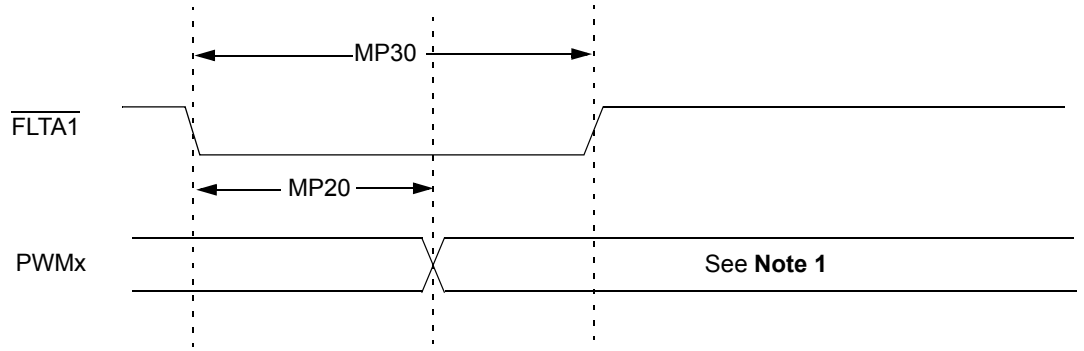

Note 1: For the logic state after a Fault, refer to the FAOVxH:FAOVxL bits in the PxFLTACON register.

FIGURE 26-10: MOTOR CONTROL PWM MODULE TIMING CHARACTERISTICS

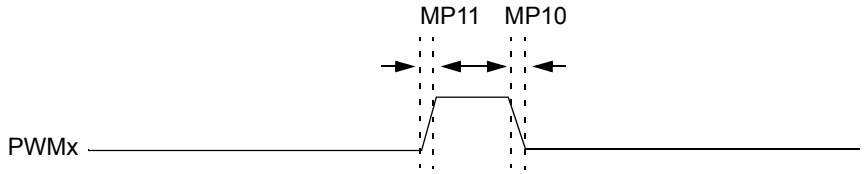

Note: Refer to Figure 26-1 for load conditions.

TABLE 26-28: MOTOR CONTROL PWM MODULE TIMING REQUIREMENTS

AC CHARACTERISTICS			Standard Operating Conditions: 3.0V to 3.6V (unless otherwise stated) Operating temperature -40°C ≤ TA ≤ +85°C for Industrial -40°C ≤ TA ≤ +125°C for Extended				
Param No.	**Symbol**	**Characteristic(1)**	**Min**	**Typ**	**Max**	**Units**	**Conditions**
MP10	TFPWM	PWM Output Fall Time	—	—	—	ns	See Parameter DO32
MP11	TRPWM	PWM Output Rise Time	—	—	—	ns	See Parameter DO31
MP20	TFD	Fault Input ↓ to PWM I/O Change	—	—	50	ns	
MP30	TFH	Minimum Pulse Width	50	—	—	ns	

Note 1: These parameters are characterized by similarity, but are not tested in manufacturing.

TABLE 26-29: SPIx MAXIMUM DATA/CLOCK RATE SUMMARY FOR dsPIC33FJ16(GP/MC)10X

AC CHARACTERISTICS			Standard Operating Conditions: 2.4V to 3.6V (unless otherwise stated) Operating temperature -40°C ≤ TA ≤ +85°C for Industrial -40°C ≤ TA ≤ +125°C for Extended			
Maximum Data Rate	**Master Transmit Only (Half-Duplex)**	**Master Transmit/Receive (Full-Duplex)**	**Slave Transmit/Receive (Full-Duplex)**	**CKE**	**CKP**	**SMP**
15 MHz	Table 26-30	—	—	0,1	0,1	0,1
10 MHz	—	Table 26-31	—	1	0,1	1
10 MHz	—	Table 26-32	—	0	0,1	1
15 MHz	—	—	Table 26-33	1	0	0
11 MHz	—	—	Table 26-34	1	1	0
15 MHz	—	—	Table 26-35	0	1	0
11 MHz	—	—	Table 26-36	0	0	0

FIGURE 26-11: SPIx MASTER MODE (HALF-DUPLEX, TRANSMIT ONLY, CKE = 0) TIMING CHARACTERISTICS FOR dsPIC33FJ16(GP/MC)10X

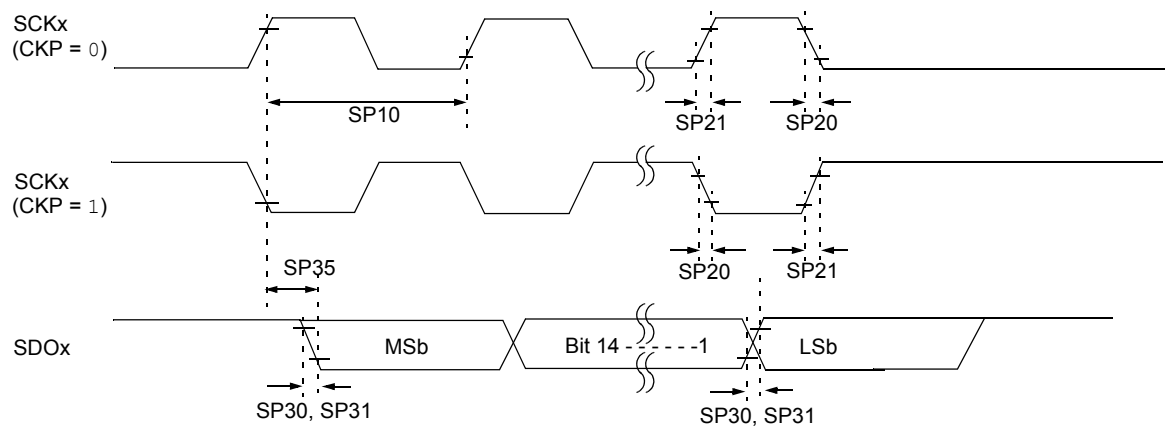

Note: Refer to Figure 26-1 for load conditions.

© 2011-2012 Microchip Technology Inc.

FIGURE 26-12: SPIx MASTER MODE (HALF-DUPLEX, TRANSMIT ONLY, CKE = 1) TIMING CHARACTERISTICS FOR dsPIC33FJ16(GP/MC)10X

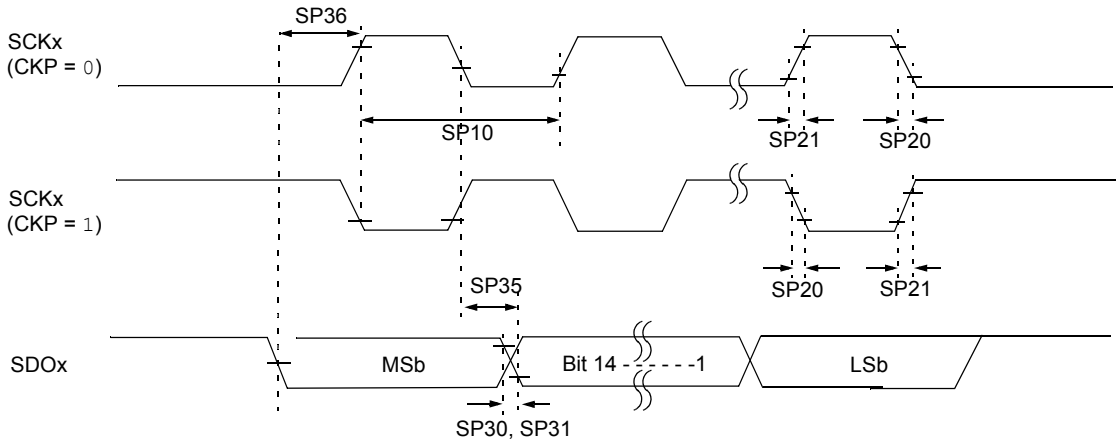

Note: Refer to Figure 26-1 for load conditions.

TABLE 26-30: SPIx MASTER MODE (HALF-DUPLEX, TRANSMIT ONLY) TIMING REQUIREMENTS FOR dsPIC33FJ16(GP/MC)10X

AC CHARACTERISTICS			Standard Operating Conditions: 2.4V to 3.6V (unless otherwise stated) Operating temperature -40°C ≤ TA ≤ +85°C for Industrial -40°C ≤ TA ≤ +125°C for Extended				
Param No.	**Symbol**	**Characteristic(1)**	**Min**	**Typ(2)**	**Max**	**Units**	**Conditions**
SP10	TscP	Maximum SCKx Frequency	—	—	15	MHz	See **Note 3**
SP20	TscF	SCKx Output Fall Time	—	—	—	ns	See Parameter DO32 and **Note 4**
SP21	TscR	SCKx Output Rise Time	—	—	—	ns	See Parameter DO31 and **Note 4**
SP30	TdoF	SDOx Data Output Fall Time	—	—	—	ns	See Parameter DO32 and **Note 4**
SP31	TdoR	SDOx Data Output Rise Time	—	—	—	ns	See Parameter DO31 and **Note 4**
SP35	TscH2doV, TscL2doV	SDOx Data Output Valid after SCKx Edge	—	6	20	ns	
SP36	TdiV2scH, TdiV2scL	SDOx Data Output Setup to First SCKx Edge	30	—	—	ns	

Note 1: These parameters are characterized, but are not tested in manufacturing.

2: Data in “Typ” column is at 3.3V, +25°C unless otherwise stated.

3: The minimum clock period for SCKx is 66.7 ns. Therefore, the clock generated in Master mode must not violate this specification.

4: Assumes 50 pF load on all SPIx pins.

FIGURE 26-13: SPIx MASTER MODE (FULL-DUPLEX, CKE = 1, CKP = x, SMP = 1) TIMING CHARACTERISTICS FOR dsPIC33FJ16(GP/MC)10X

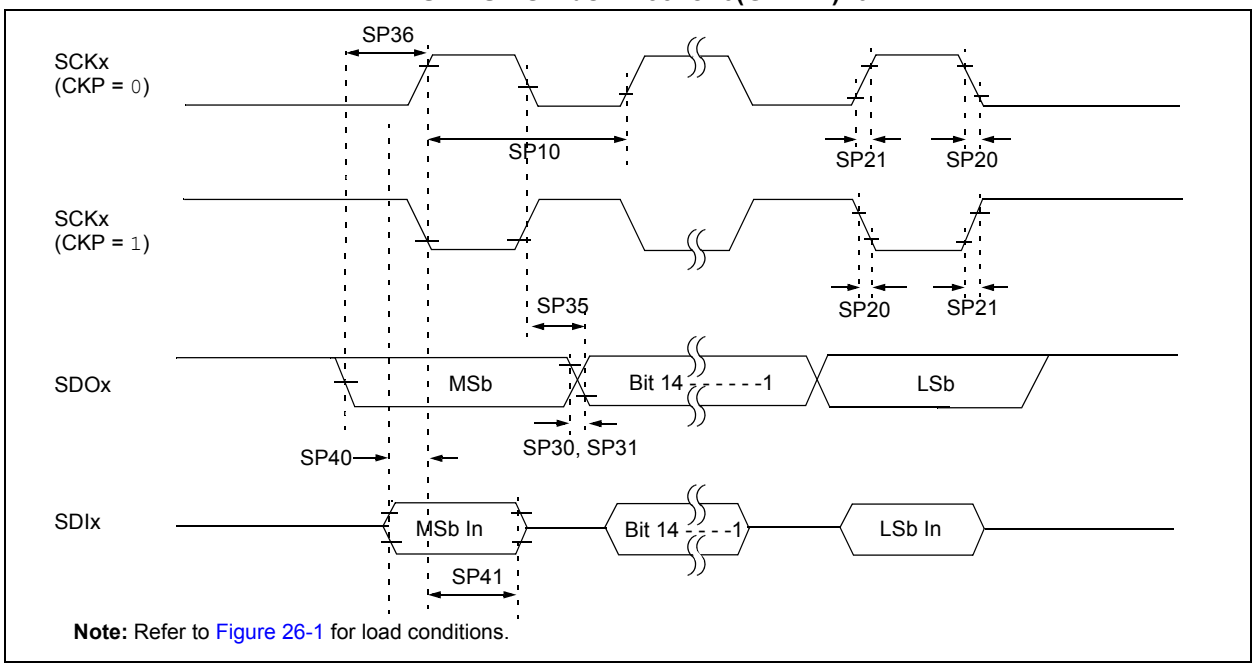

Note: Refer to Figure 26-1 for load conditions.

TABLE 26-31: SPIx MASTER MODE (FULL-DUPLEX, CKE = 1, CKP = x, SMP = 1) TIMING REQUIREMENTS FOR dsPIC33FJ16(GP/MC)10X

AC CHARACTERISTICS			Standard Operating Conditions: 2.4V to 3.6V (unless otherwise stated) Operating temperature -40°C ≤ TA ≤ +85°C for Industrial -40°C ≤ TA ≤ +125°C for Extended				
Param No.	**Symbol**	**Characteristic(1)**	**Min**	**Typ(2)**	**Max**	**Units**	**Conditions**
SP10	TscP	Maximum SCKx Frequency	—	—	10	MHz	See **Note 3**
SP20	TscF	SCKx Output Fall Time	—	—	—	ns	See Parameter DO32 and **Note 4**
SP21	TscR	SCKx Output Rise Time	—	—	—	ns	See Parameter DO31 and **Note 4**
SP30	TdoF	SDOx Data Output Fall Time	—	—	—	ns	See Parameter DO32 and **Note 4**
SP31	TdoR	SDOx Data Output Rise Time	—	—	—	ns	See Parameter DO31 and **Note 4**
SP35	TscH2doV, TscL2doV	SDOx Data Output Valid after SCKx Edge	—	6	20	ns	
SP36	TdoV2sc, TdoV2scL	SDOx Data Output Setup to First SCKx Edge	30	—	—	ns	
SP40	TdiV2scH, TdiV2scL	Setup Time of SDIx Data Input to SCKx Edge	30	—	—	ns	
SP41	TscH2diL, TscL2diL	Hold Time of SDIx Data Input to SCKx Edge	30	—	—	ns	

Note 1: These parameters are characterized, but are not tested in manufacturing.

2: Data in "Typ" column is at 3.3V, +25°C unless otherwise stated.

3: The minimum clock period for SCKx is 100 ns. The clock generated in Master mode must not violate this specification.

4: Assumes 50 pF load on all SPIx pins.

© 2011-2012 Microchip Technology Inc.

FIGURE 26-14: SPIx MASTER MODE (FULL-DUPLEX, CKE = 0, CKP = x, SMP = 1) TIMING CHARACTERISTICS FOR dsPIC33FJ16(GP/MC)10X

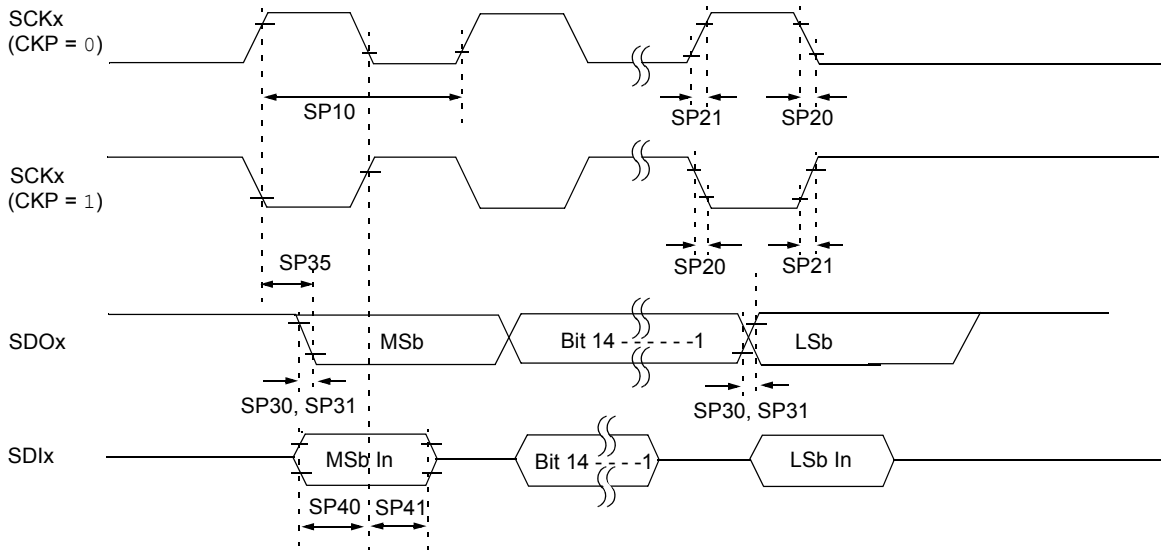

Note: Refer to Figure 26-1 for load conditions.

TABLE 26-32: SPIx MASTER MODE (FULL-DUPLEX, CKE = 0, CKP = x, SMP = 1) TIMING REQUIREMENTS FOR dsPIC33FJ16(GP/MC)10X

AC CHARACTERISTICS			Standard Operating Conditions: 2.4V to 3.6V (unless otherwise stated) Operating temperature -40°C ≤ TA ≤ +85°C for Industrial -40°C ≤ TA ≤ +125°C for Extended				
Param No.	**Symbol**	**Characteristic(1)**	**Min**	**Typ(2)**	**Max**	**Units**	**Conditions**
SP10	TscP	Maximum SCKx Frequency	—	—	10	MHz	-40ºC to +125ºC and see **Note 3**
SP20	TscF	SCKx Output Fall Time	—	—	—	ns	See Parameter DO32 and **Note 4**
SP21	TscR	SCKx Output Rise Time	—	—	—	ns	See Parameter DO31 and **Note 4**
SP30	TdoF	SDOx Data Output Fall Time	—	—	—	ns	See Parameter DO32 and **Note 4**
SP31	TdoR	SDOx Data Output Rise Time	—	—	—	ns	See Parameter DO31 and **Note 4**
SP35	TscH2doV, TscL2doV	SDOx Data Output Valid after SCKx Edge	—	6	20	ns	
SP36	TdoV2scH, TdoV2scL	SDOx Data Output Setup to First SCKx Edge	30	—	—	ns	
SP40	TdiV2scH, TdiV2scL	Setup Time of SDIx Data Input to SCKx Edge	30	—	—	ns	
SP41	TscH2diL, TscL2diL	Hold Time of SDIx Data Input to SCKx Edge	30	—	—	ns	

Note 1: These parameters are characterized, but are not tested in manufacturing.

2: Data in “Typ” column is at 3.3V, +25°C unless otherwise stated.

3: The minimum clock period for SCKx is 100 ns. The clock generated in Master mode must not violate this specification.

4: Assumes 50 pF load on all SPIx pins.

FIGURE 26-15: SPIx SLAVE MODE (FULL-DUPLEX, CKE = 1, CKP = 0, SMP = 0) TIMING CHARACTERISTICS FOR dsPIC33FJ16(GP/MC)10X

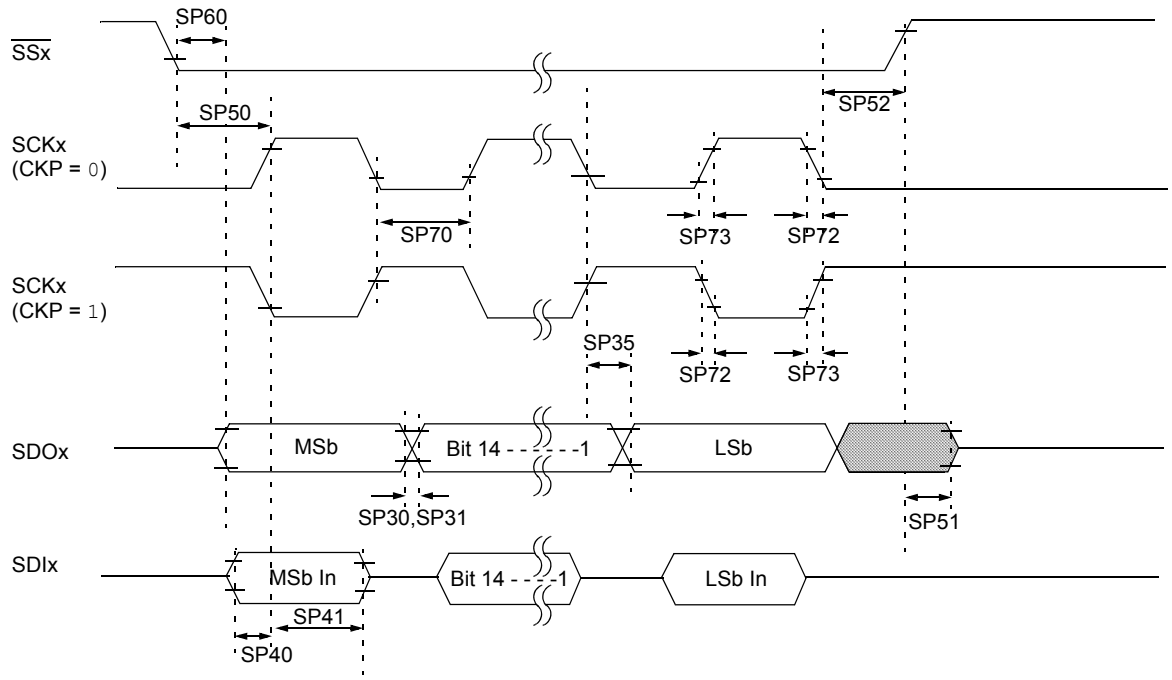

Note: Refer to Figure 26-1 for load conditions.

© 2011-2012 Microchip Technology Inc.

TABLE 26-33: SPIx SLAVE MODE (FULL-DUPLEX, CKE = 1, CKP = 0, SMP = 0) TIMING REQUIREMENTS FOR dsPIC33FJ16(GP/MC)10X

AC CHARACTERISTICS			Standard Operating Conditions: 2.4V to 3.6V (unless otherwise stated) Operating temperature -40°C ≤ TA ≤ +85°C for Industrial -40°C ≤ TA ≤ +125°C for Extended				
Param No.	**Symbol**	**Characteristic(1)**	**Min**	**Typ(2)**	**Max**	**Units**	**Conditions**
SP70	TscP	Maximum SCKx Input Frequency	—	—	15	MHz	See **Note 3**
SP72	TscF	SCKx Input Fall Time	—	—	—	ns	See Parameter DO32 and **Note 4**
SP73	TscR	SCKx Input Rise Time	—	—	—	ns	See Parameter DO31 and **Note 4**
SP30	TdoF	SDOx Data Output Fall Time	—	—	—	ns	See Parameter DO32 and **Note 4**
SP31	TdoR	SDOx Data Output Rise Time	—	—	—	ns	See Parameter DO31 and **Note 4**
SP35	TscH2doV, TscL2doV	SDOx Data Output Valid after SCKx Edge	—	6	20	ns	
SP36	TdoV2scH, TdoV2scL	SDOx Data Output Setup to First SCKx Edge	30	—	—	ns	
SP40	TdiV2scH, TdiV2scL	Setup Time of SDIx Data Input to SCKx Edge	30	—	—	ns	
SP41	TscH2diL, TscL2diL	Hold Time of SDIx Data Input to SCKx Edge	30	—	—	ns	
SP50	TssL2scH, TssL2scL	$\overline{SSx}$ ↓ to SCKx ↑ or SCKx Input	120	—	—	ns	
SP51	TssH2doZ	$\overline{SSx}$ ↑ to SDOx Output High-Impedance	10	—	50	ns	See **Note 4**
SP52	TscH2ssH TscL2ssH	$\overline{SSx}$ after SCKx Edge	1.5 TCY + 40	—	—	ns	See **Note 4**
SP60	TssL2doV	SDOx Data Output Valid after $\overline{SSx}$ Edge	—	—	50	ns	

Note 1: These parameters are characterized, but are not tested in manufacturing.

2: Data in “Typ” column is at 3.3V, +25°C unless otherwise stated.

3: The minimum clock period for SCKx is 66.7 ns. Therefore, the SCK clock generated by the master must not violate this specification.

4: Assumes 50 pF load on all SPIx pins.

FIGURE 26-16: SPIx SLAVE MODE (FULL-DUPLEX, CKE = 1, CKP = 1, SMP = 0) TIMING CHARACTERISTICS FOR dsPIC33FJ16(GP/MC)10X

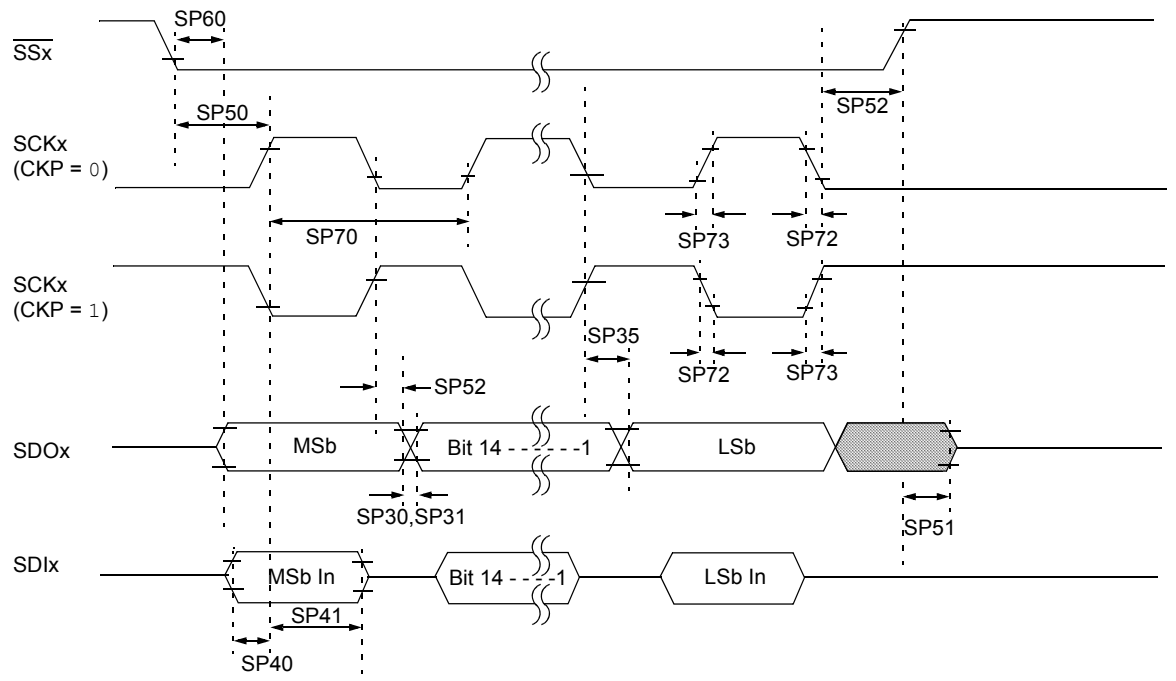

Note: Refer to Figure 26-1 for load conditions.

© 2011-2012 Microchip Technology Inc.

TABLE 26-34: SPIx SLAVE MODE (FULL-DUPLEX, CKE = 1, CKP = 1, SMP = 0) TIMING REQUIREMENTS FOR dsPIC33FJ16(GP/MC)10X

AC CHARACTERISTICS			Standard Operating Conditions: 2.4V to 3.6V (unless otherwise stated) Operating temperature -40°C ≤ TA ≤ +85°C for Industrial -40°C ≤ TA ≤ +125°C for Extended				
Param No.	**Symbol**	**Characteristic(1)**	**Min**	**Typ(2)**	**Max**	**Units**	**Conditions**
SP70	TscP	Maximum SCKx Input Frequency	—	—	11	MHz	See **Note 3**
SP72	TscF	SCKx Input Fall Time	—	—	—	ns	See Parameter DO32 and **Note 4**
SP73	TscR	SCKx Input Rise Time	—	—	—	ns	See Parameter DO31 and **Note 4**
SP30	TdoF	SDOx Data Output Fall Time	—	—	—	ns	See Parameter DO32 and **Note 4**
SP31	TdoR	SDOx Data Output Rise Time	—	—	—	ns	See Parameter DO31 and **Note 4**
SP35	TscH2doV, TscL2doV	SDOx Data Output Valid after SCKx Edge	—	6	20	ns	
SP36	TdoV2scH, TdoV2scL	SDOx Data Output Setup to First SCKx Edge	30	—	—	ns	
SP40	TdiV2scH, TdiV2scL	Setup Time of SDIx Data Input to SCKx Edge	30	—	—	ns	
SP41	TscH2diL, TscL2diL	Hold Time of SDIx Data Input to SCKx Edge	30	—	—	ns	
SP50	TssL2scH, TssL2scL	$\overline{SSx}$ ↓ to SCKx ↑ or SCKx Input	120	—	—	ns	
SP51	TssH2doZ	$\overline{SSx}$ ↑ to SDOx Output High-Impedance	10	—	50	ns	See **Note 4**
SP52	TscH2ssH TscL2ssH	$\overline{SSx}$ after SCKx Edge	1.5 TCY + 40	—	—	ns	See **Note 4**
SP60	TssL2doV	SDOx Data Output Valid after $\overline{SSx}$ Edge	—	—	50	ns	

Note 1: These parameters are characterized, but are not tested in manufacturing.

2: Data in “Typ” column is at 3.3V, +25°C unless otherwise stated.

3: The minimum clock period for SCKx is 91 ns. Therefore, the SCK clock generated by the Master must not violate this specification.

4: Assumes 50 pF load on all SPIx pins.

FIGURE 26-17: SPIx SLAVE MODE (FULL-DUPLEX, CKE = 0, CKP = 1, SMP = 0) TIMING CHARACTERISTICS FOR dsPIC33FJ16(GP/MC)10X

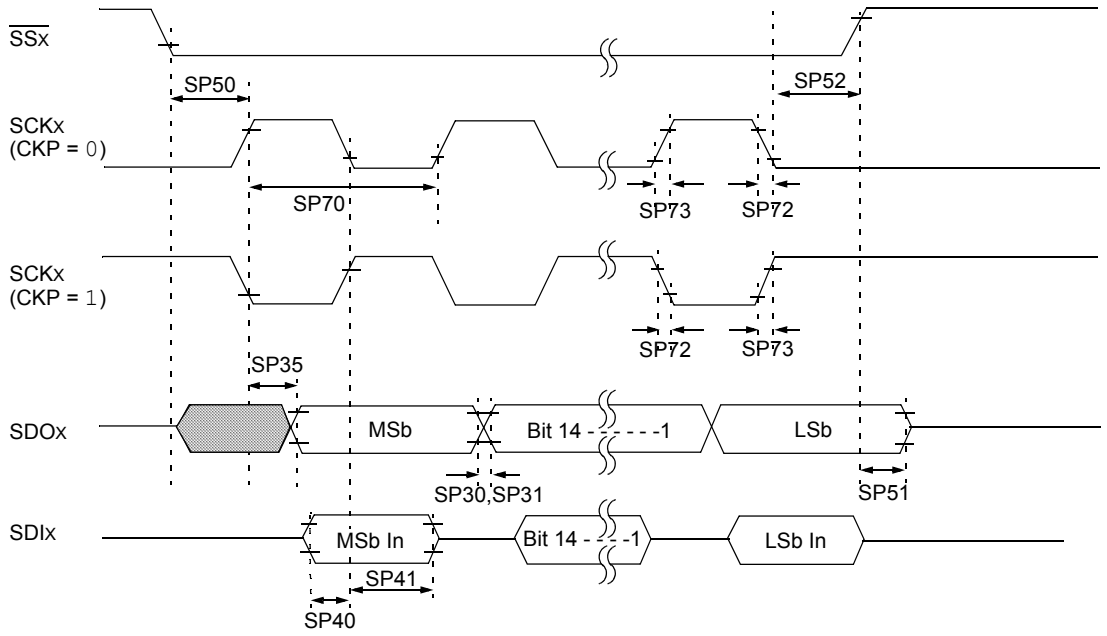

Note: Refer to Figure 26-1 for load conditions.

© 2011-2012 Microchip Technology Inc.

TABLE 26-35: SPIx SLAVE MODE (FULL-DUPLEX, CKE = 0, CKP = 1, SMP = 0) TIMING REQUIREMENTS FOR dsPIC33FJ16(GP/MC)10X

AC CHARACTERISTICS			Standard Operating Conditions: 2.4V to 3.6V (unless otherwise stated) Operating temperature -40°C ≤ TA ≤ +85°C for Industrial -40°C ≤ TA ≤ +125°C for Extended				
Param No.	**Symbol**	**Characteristic(1)**	**Min**	**Typ(2)**	**Max**	**Units**	**Conditions**
SP70	TscP	Maximum SCKx Input Frequency	—	—	15	MHz	See **Note 3**
SP72	TscF	SCKx Input Fall Time	—	—	—	ns	See Parameter DO32 and **Note 4**
SP73	TscR	SCKx Input Rise Time	—	—	—	ns	See Parameter DO31 and **Note 4**
SP30	TdoF	SDOx Data Output Fall Time	—	—	—	ns	See Parameter DO32 and **Note 4**
SP31	TdoR	SDOx Data Output Rise Time	—	—	—	ns	See Parameter DO31 and **Note 4**
SP35	TscH2doV, TscL2doV	SDOx Data Output Valid after SCKx Edge	—	6	20	ns	
SP36	TdoV2scH, TdoV2scL	SDOx Data Output Setup to First SCKx Edge	30	—	—	ns	
SP40	TdiV2scH, TdiV2scL	Setup Time of SDIx Data Input to SCKx Edge	30	—	—	ns	
SP41	TscH2diL, TscL2diL	Hold Time of SDIx Data Input to SCKx Edge	30	—	—	ns	
SP50	TssL2scH, TssL2scL	$\overline{SSx}$ ↓ to SCKx ↑ or SCKx Input	120	—	—	ns	
SP51	TssH2doZ	$\overline{SSx}$ ↑ to SDOx Output High-Impedance	10	—	50	ns	See **Note 4**
SP52	TscH2ssH TscL2ssH	$\overline{SSx}$ after SCKx Edge	1.5 TCY + 40	—	—	ns	See **Note 4**

Note 1: These parameters are characterized, but are not tested in manufacturing.

2: Data in “Typ” column is at 3.3V, +25°C unless otherwise stated.

3: The minimum clock period for SCKx is 66.7 ns. Therefore, the SCK clock generated by the Master must not violate this specification.

4: Assumes 50 pF load on all SPIx pins.

FIGURE 26-18: SPIx SLAVE MODE (FULL-DUPLEX, CKE = 0, CKP = 0, SMP = 0) TIMING CHARACTERISTICS FOR dsPIC33FJ16(GP/MC)10X

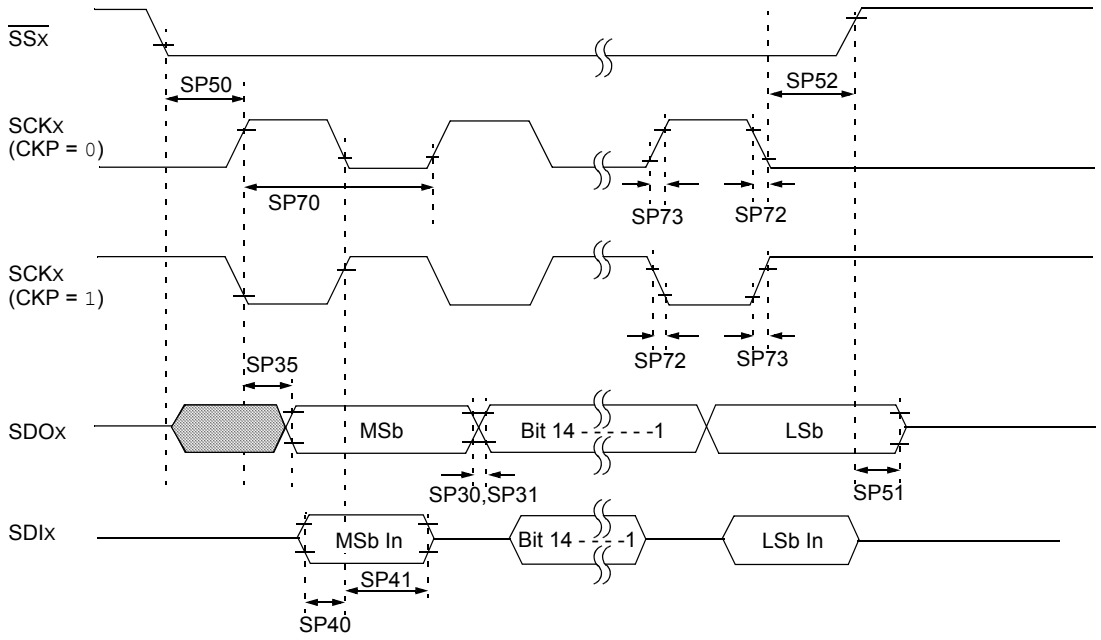

Note: Refer to Figure 26-1 for load conditions.

© 2011-2012 Microchip Technology Inc.

TABLE 26-36: SPIx SLAVE MODE (FULL-DUPLEX, CKE = 0, CKP = 0, SMP = 0) TIMING REQUIREMENTS FOR dsPIC33FJ16(GP/MC)10X

AC CHARACTERISTICS			Standard Operating Conditions: 2.4V to 3.6V (unless otherwise stated) Operating temperature -40°C ≤ TA ≤ +85°C for Industrial -40°C ≤ TA ≤ +125°C for Extended				
Param No.	**Symbol**	**Characteristic(1)**	**Min**	**Typ(2)**	**Max**	**Units**	**Conditions**
SP70	TscP	Maximum SCKx Input Frequency	—	—	11	MHz	See **Note 3**
SP72	TscF	SCKx Input Fall Time	—	—	—	ns	See Parameter DO32 and **Note 4**
SP73	TscR	SCKx Input Rise Time	—	—	—	ns	See Parameter DO31 and **Note 4**
SP30	TdoF	SDOx Data Output Fall Time	—	—	—	ns	See Parameter DO32 and **Note 4**
SP31	TdoR	SDOx Data Output Rise Time	—	—	—	ns	See Parameter DO31 and **Note 4**
SP35	TscH2doV, TscL2doV	SDOx Data Output Valid after SCKx Edge	—	6	20	ns	
SP36	TdoV2scH, TdoV2scL	SDOx Data Output Setup to First SCKx Edge	30	—	—	ns	
SP40	TdiV2scH, TdiV2scL	Setup Time of SDIx Data Input to SCKx Edge	30	—	—	ns	
SP41	TscH2diL, TscL2diL	Hold Time of SDIx Data Input to SCKx Edge	30	—	—	ns	
SP50	TssL2scH, TssL2scL	$\overline{SSx}$ ↓ to SCKx ↑ or SCKx Input	120	—	—	ns	
SP51	TssH2doZ	$\overline{SSx}$ ↑ to SDOx Output High-Impedance	10	—	50	ns	See **Note 4**
SP52	TscH2ssH TscL2ssH	$\overline{SSx}$ after SCKx Edge	1.5 TCY + 40	—	—	ns	See **Note 4**

Note 1: These parameters are characterized, but are not tested in manufacturing.

2: Data in “Typ” column is at 3.3V, +25°C unless otherwise stated.

3: The minimum clock period for SCKx is 91 ns. Therefore, the SCK clock generated by the Master must not violate this specification.

4: Assumes 50 pF load on all SPIx pins.

TABLE 26-37: SPIx MAXIMUM DATA/CLOCK RATE SUMMARY FOR dsPIC33FJ32(GP/MC)10X

AC CHARACTERISTICS			Standard Operating Conditions: 3.0V to 3.6V (unless otherwise stated) Operating temperature -40°C ≤ TA ≤ +85°C for Industrial -40°C ≤ TA ≤ +125°C for Extended			
Maximum Data Rate	**Master Transmit Only (Half-Duplex)**	**Master Transmit/Receive (Full-Duplex)**	**Slave Transmit/Receive (Full-Duplex)**	**CKE**	**CKP**	**SMP**
15 MHz	Table 26-30	—	—	0,1	0,1	0,1
9 MHz	—	Table 26-31	—	1	0,1	1
9 MHz	—	Table 26-32	—	0	0,1	1
15 MHz	—	—	Table 26-33	1	0	0
11 Mhz	—	—	Table 26-34	1	1	0
15 MHz	—	—	Table 26-35	0	1	0
11 MHz	—	—	Table 26-36	0	0	0

FIGURE 26-19: SPIx MASTER MODE (HALF-DUPLEX, TRANSMIT ONLY, CKE = 0) TIMING CHARACTERISTICS FOR dsPIC33FJ32(GP/MC)10X

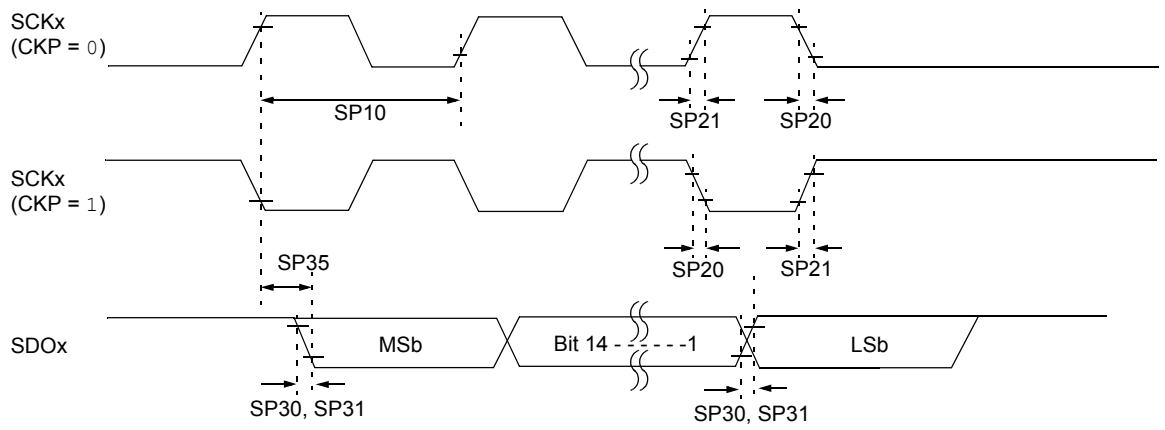

Note: Refer to Figure 26-1 for load conditions.

© 2011-2012 Microchip Technology Inc.

FIGURE 26-20: SPIx MASTER MODE (HALF-DUPLEX, TRANSMIT ONLY, CKE = 1) TIMING CHARACTERISTICS FOR dsPIC33FJ32(GP/MC)10X

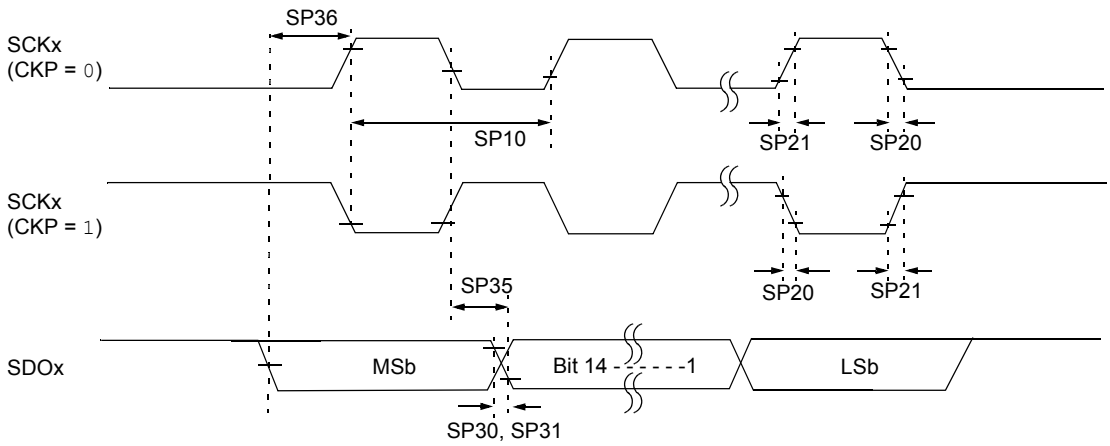

Note: Refer to Figure 26-1 for load conditions.

TABLE 26-38: SPIx MASTER MODE (HALF-DUPLEX, TRANSMIT ONLY) TIMING REQUIREMENTS FOR dsPIC33FJ32(GP/MC)10X

AC CHARACTERISTICS			Standard Operating Conditions: 3.0V to 3.6V (unless otherwise stated) Operating temperature -40°C ≤ TA ≤ +85°C for Industrial -40°C ≤ TA ≤ +125°C for Extended				
Param No.	**Symbol**	**Characteristic(1)**	**Min**	**Typ(2)**	**Max**	**Units**	**Conditions**
SP10	TscP	Maximum SCKx Frequency	—	—	15	MHz	See **Note 3**
SP20	TscF	SCKx Output Fall Time	—	—	—	ns	See Parameter DO32 and **Note 4**
SP21	TscR	SCKx Output Rise Time	—	—	—	ns	See Parameter DO31 and **Note 4**
SP30	TdoF	SDOx Data Output Fall Time	—	—	—	ns	See Parameter DO32 and **Note 4**
SP31	TdoR	SDOx Data Output Rise Time	—	—	—	ns	See Parameter DO31 and **Note 4**
SP35	TscH2doV, TscL2doV	SDOx Data Output Valid after SCKx Edge	—	6	20	ns	
SP36	TdiV2scH, TdiV2scL	SDOx Data Output Setup to First SCKx Edge	30	—	—	ns	

Note 1: These parameters are characterized, but are not tested in manufacturing.

2: Data in “Typ” column is at 3.3V, +25°C unless otherwise stated.

3: The minimum clock period for SCKx is 66.7 ns. Therefore, the clock generated in Master mode must not violate this specification.

4: Assumes 50 pF load on all SPIx pins.

FIGURE 26-21: SPIx MASTER MODE (FULL-DUPLEX, CKE = 1, CKP = x, SMP = 1) TIMING CHARACTERISTICS FOR dsPIC33FJ32(GP/MC)10X

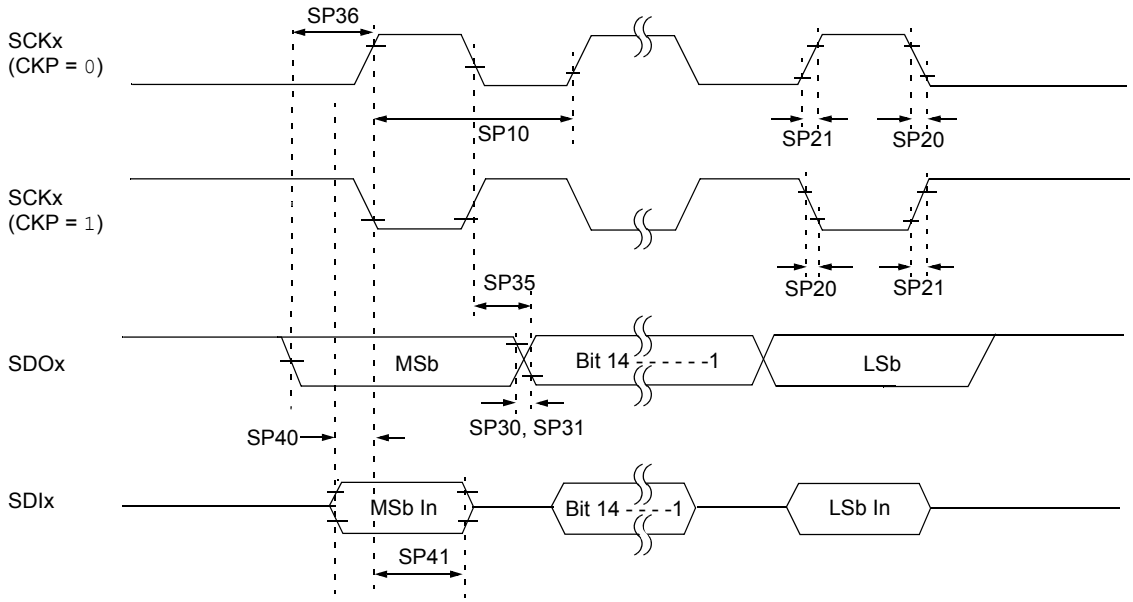

Note: Refer to Figure 26-1 for load conditions.

TABLE 26-39: SPIx MASTER MODE (FULL-DUPLEX, CKE = 1, CKP = x, SMP = 1) TIMING REQUIREMENTS FOR dsPIC33FJ32(GP/MC)10X

AC CHARACTERISTICS			Standard Operating Conditions: 3.0V to 3.6V (unless otherwise stated) Operating temperature -40°C ≤ TA ≤ +85°C for Industrial -40°C ≤ TA ≤ +125°C for Extended				
Param No.	**Symbol**	**Characteristic(1)**	**Min**	**Typ(2)**	**Max**	**Units**	**Conditions**
SP10	TscP	Maximum SCKx Frequency	—	—	9	MHz	See **Note 3**
SP20	TscF	SCKx Output Fall Time	—	—	—	ns	See Parameter DO32 and **Note 4**
SP21	TscR	SCKx Output Rise Time	—	—	—	ns	See Parameter DO31 and **Note 4**
SP30	TdoF	SDOx Data Output Fall Time	—	—	—	ns	See Parameter DO32 and **Note 4**
SP31	TdoR	SDOx Data Output Rise Time	—	—	—	ns	See Parameter DO31 and **Note 4**
SP35	TscH2doV, TscL2doV	SDOx Data Output Valid after SCKx Edge	—	6	20	ns	
SP36	TdoV2sc, TdoV2scL	SDOx Data Output Setup to First SCKx Edge	30	—	—	ns	
SP40	TdiV2scH, TdiV2scL	Setup Time of SDIx Data Input to SCKx Edge	30	—	—	ns	
SP41	TscH2diL, TscL2diL	Hold Time of SDIx Data Input to SCKx Edge	30	—	—	ns	

Note 1: These parameters are characterized, but are not tested in manufacturing.
2: Data in “Typ” column is at 3.3V, +25°C unless otherwise stated.
3: The minimum clock period for SCKx is 111 ns. The clock generated in Master mode must not violate this specification.
4: Assumes 50 pF load on all SPIx pins.

© 2011-2012 Microchip Technology Inc.

FIGURE 26-22: SPIx MASTER MODE (FULL-DUPLEX, CKE = 0, CKP = x, SMP = 1) TIMING CHARACTERISTICS FOR dsPIC33FJ32(GP/MC)10X

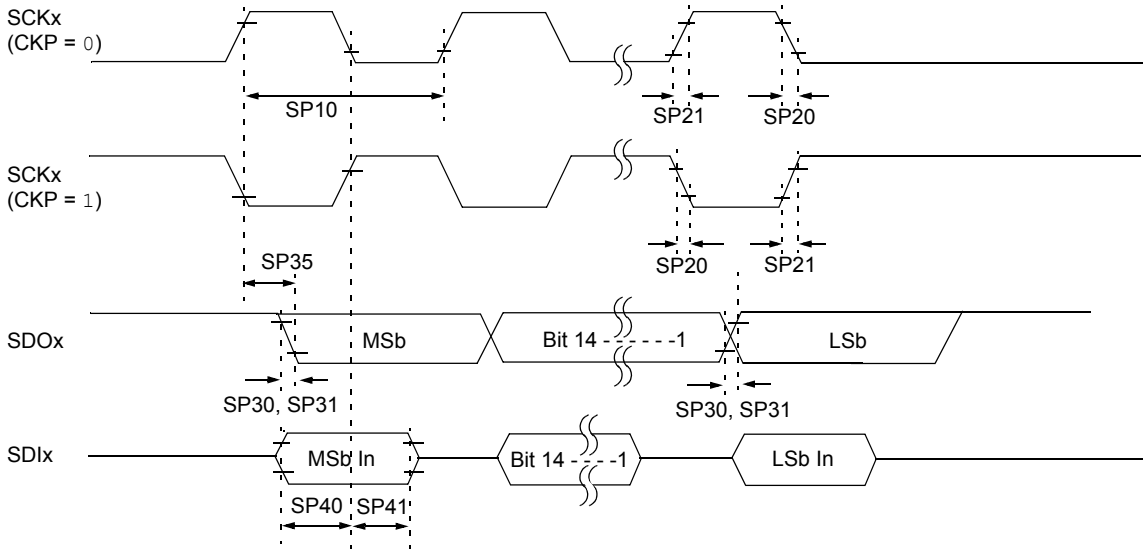

Note: Refer to Figure 26-1 for load conditions.

TABLE 26-40: SPIx MASTER MODE (FULL-DUPLEX, CKE = 0, CKP = x, SMP = 1) TIMING REQUIREMENTS FOR dsPIC33FJ32(GP/MC)10X

AC CHARACTERISTICS			Standard Operating Conditions: 3.0V to 3.6V (unless otherwise stated) Operating temperature -40°C ≤ TA ≤ +85°C for Industrial -40°C ≤ TA ≤ +125°C for Extended				
Param No.	**Symbol**	**Characteristic(1)**	**Min**	**Typ(2)**	**Max**	**Units**	**Conditions**
SP10	TscP	Maximum SCKx Frequency	—	—	9	MHz	-40ºC to +125ºC and See **Note 3**
SP20	TscF	SCKx Output Fall Time	—	—	—	ns	See Parameter DO32 and **Note 4**
SP21	TscR	SCKx Output Rise Time	—	—	—	ns	See Parameter DO31 and **Note 4**
SP30	TdoF	SDOx Data Output Fall Time	—	—	—	ns	See Parameter DO32 and **Note 4**
SP31	TdoR	SDOx Data Output Rise Time	—	—	—	ns	See Parameter DO31 and **Note 4**
SP35	TscH2doV, TscL2doV	SDOx Data Output Valid after SCKx Edge	—	6	20	ns	
SP36	TdoV2scH, TdoV2scL	SDOx Data Output Setup to First SCKx Edge	30	—	—	ns	
SP40	TdiV2scH, TdiV2scL	Setup Time of SDIx Data Input to SCKx Edge	30	—	—	ns	
SP41	TscH2diL, TscL2diL	Hold Time of SDIx Data Input to SCKx Edge	30	—	—	ns	

Note 1: These parameters are characterized, but are not tested in manufacturing.
2: Data in “Typ” column is at 3.3V, +25°C unless otherwise stated.
3: The minimum clock period for SCKx is 111 ns. The clock generated in Master mode must not violate this specification.
4: Assumes 50 pF load on all SPIx pins.

FIGURE 26-23: SPIx SLAVE MODE (FULL-DUPLEX, CKE = 1, CKP = 0, SMP = 0) TIMING CHARACTERISTICS FOR dsPIC33FJ32(GP/MC)10X

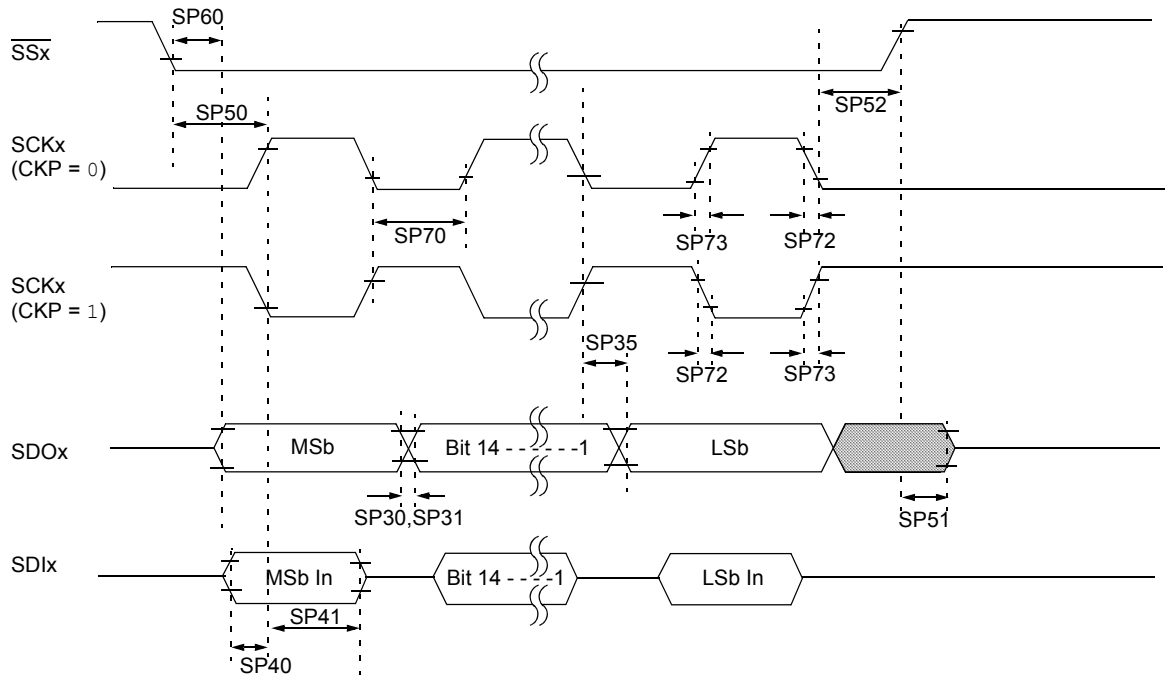

Note: Refer to Figure 26-1 for load conditions.

© 2011-2012 Microchip Technology Inc.

TABLE 26-41: SPIx SLAVE MODE (FULL-DUPLEX, CKE = 1, CKP = 0, SMP = 0) TIMING REQUIREMENTS FOR dsPIC33FJ32(GP/MC)10X

AC CHARACTERISTICS			Standard Operating Conditions: 3.0V to 3.6V (unless otherwise stated) Operating temperature -40°C ≤ TA ≤ +85°C for Industrial -40°C ≤ TA ≤ +125°C for Extended				
Param No.	**Symbol**	**Characteristic(1)**	**Min**	**Typ(2)**	**Max**	**Units**	**Conditions**
SP70	TscP	Maximum SCKx Input Frequency	—	—	15	MHz	See **Note 3**
SP72	TscF	SCKx Input Fall Time	—	—	—	ns	See Parameter DO32 and **Note 4**
SP73	TscR	SCKx Input Rise Time	—	—	—	ns	See Parameter DO31 and **Note 4**
SP30	TdoF	SDOx Data Output Fall Time	—	—	—	ns	See Parameter DO32 and **Note 4**
SP31	TdoR	SDOx Data Output Rise Time	—	—	—	ns	See Parameter DO31 and **Note 4**
SP35	TscH2doV, TscL2doV	SDOx Data Output Valid after SCKx Edge	—	6	20	ns	
SP36	TdoV2scH, TdoV2scL	SDOx Data Output Setup to First SCKx Edge	30	—	—	ns	
SP40	TdiV2scH, TdiV2scL	Setup Time of SDIx Data Input to SCKx Edge	30	—	—	ns	
SP41	TscH2diL, TscL2diL	Hold Time of SDIx Data Input to SCKx Edge	30	—	—	ns	
SP50	TssL2scH, TssL2scL	$\overline{SSx}$ ↓ to SCKx ↑ or SCKx Input	120	—	—	ns	
SP51	TssH2doZ	$\overline{SSx}$ ↑ to SDOx Output High-Impedance	10	—	50	ns	See **Note 4**
SP52	TscH2ssH TscL2ssH	$\overline{SSx}$ after SCKx Edge	1.5 TCY + 40	—	—	ns	See **Note 4**
SP60	TssL2doV	SDOx Data Output Valid after $\overline{SSx}$ Edge	—	—	50	ns	

Note 1: These parameters are characterized, but are not tested in manufacturing.

2: Data in “Typ” column is at 3.3V, +25°C unless otherwise stated.

3: The minimum clock period for SCKx is 66.7 ns. Therefore, the SCK clock generated by the Master must not violate this specification.

4: Assumes 50 pF load on all SPIx pins.

FIGURE 26-24: SPIx SLAVE MODE (FULL-DUPLEX, CKE = 1, CKP = 1, SMP = 0) TIMING CHARACTERISTICS FOR dsPIC33FJ32(GP/MC)10X

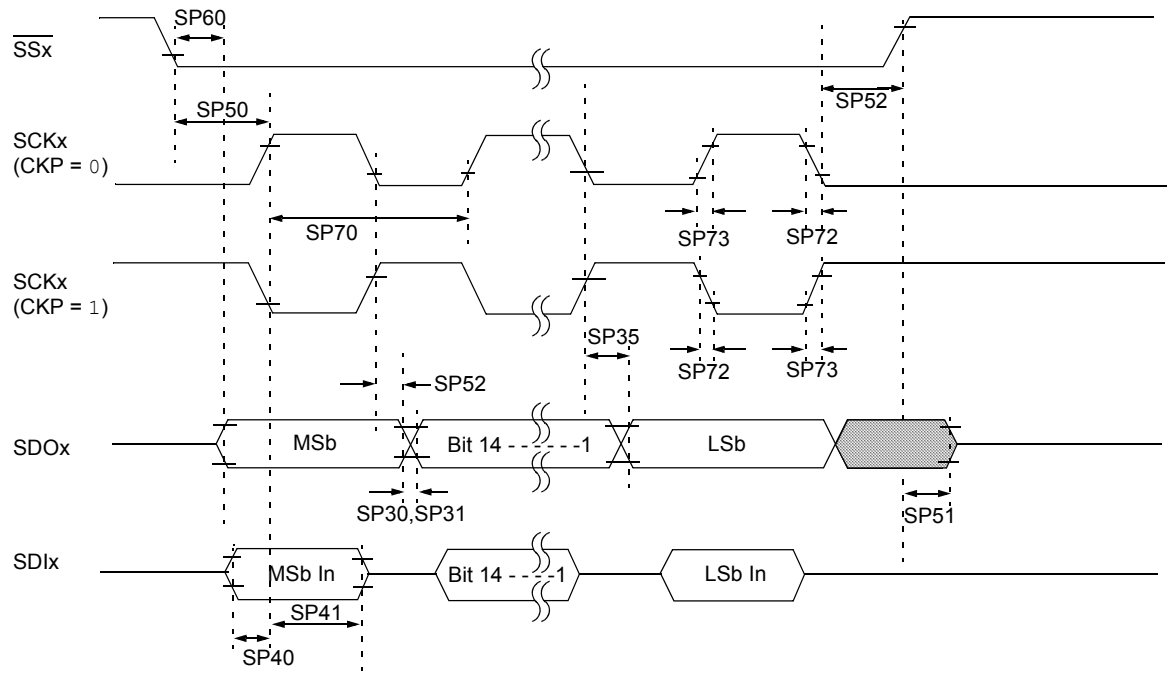

Note: Refer to Figure 26-1 for load conditions.

© 2011-2012 Microchip Technology Inc.

TABLE 26-42: SPIx SLAVE MODE (FULL-DUPLEX, CKE = 1, CKP = 1, SMP = 0) TIMING REQUIREMENTS FOR dsPIC33FJ32(GP/MC)10X

AC CHARACTERISTICS			Standard Operating Conditions: 3.0V to 3.6V (unless otherwise stated) Operating temperature -40°C ≤ TA ≤ +85°C for Industrial -40°C ≤ TA ≤ +125°C for Extended				
Param No.	**Symbol**	**Characteristic(1)**	**Min**	**Typ(2)**	**Max**	**Units**	**Conditions**
SP70	TscP	Maximum SCKx Input Frequency	—	—	11	MHz	See **Note 3**
SP72	TscF	SCKx Input Fall Time	—	—	—	ns	See Parameter DO32 and **Note 4**
SP73	TscR	SCKx Input Rise Time	—	—	—	ns	See Parameter DO31 and **Note 4**
SP30	TdoF	SDOx Data Output Fall Time	—	—	—	ns	See Parameter DO32 and **Note 4**
SP31	TdoR	SDOx Data Output Rise Time	—	—	—	ns	See Parameter DO31 and **Note 4**
SP35	TscH2doV, TscL2doV	SDOx Data Output Valid after SCKx Edge	—	6	20	ns	
SP36	TdoV2scH, TdoV2scL	SDOx Data Output Setup to First SCKx Edge	30	—	—	ns	
SP40	TdiV2scH, TdiV2scL	Setup Time of SDIx Data Input to SCKx Edge	30	—	—	ns	
SP41	TscH2diL, TscL2diL	Hold Time of SDIx Data Input to SCKx Edge	30	—	—	ns	
SP50	TssL2scH, TssL2scL	$\overline{SSx}$ ↓ to SCKx ↑ or SCKx Input	120	—	—	ns	
SP51	TssH2doZ	$\overline{SSx}$ ↑ to SDOx Output High-Impedance	10	—	50	ns	See **Note 4**
SP52	TscH2ssH TscL2ssH	$\overline{SSx}$ after SCKx Edge	1.5 TCY + 40	—	—	ns	See **Note 4**
SP60	TssL2doV	SDOx Data Output Valid after $\overline{SSx}$ Edge	—	—	50	ns	

Note 1: These parameters are characterized, but are not tested in manufacturing.

2: Data in “Typ” column is at 3.3V, +25°C unless otherwise stated.

3: The minimum clock period for SCKx is 91 ns. Therefore, the SCK clock generated by the master must not violate this specification.

4: Assumes 50 pF load on all SPIx pins.

FIGURE 26-25: SPIx SLAVE MODE (FULL-DUPLEX, CKE = 0, CKP = 1, SMP = 0) TIMING CHARACTERISTICS FOR dsPIC33FJ32(GP/MC)10X

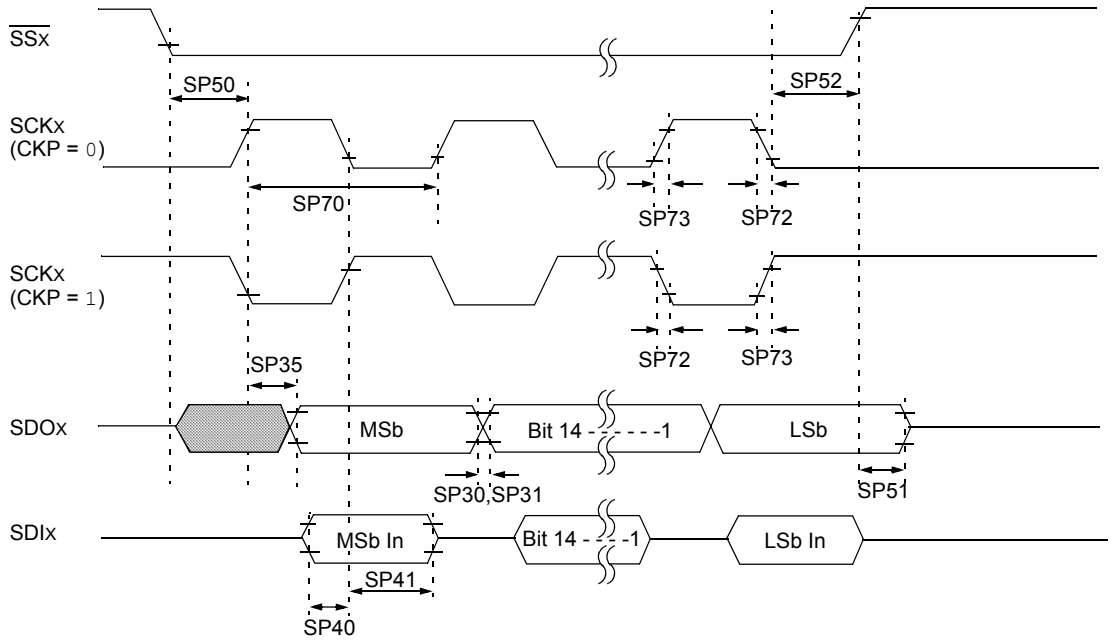

Note: Refer to Figure 26-1 for load conditions.

© 2011-2012 Microchip Technology Inc.

TABLE 26-43: SPIx SLAVE MODE (FULL-DUPLEX, CKE = 0, CKP = 1, SMP = 0) TIMING REQUIREMENTS FOR dsPIC33FJ32(GP/MC)10X

AC CHARACTERISTICS			Standard Operating Conditions: 3.0V to 3.6V (unless otherwise stated) Operating temperature -40°C ≤ TA ≤ +85°C for Industrial -40°C ≤ TA ≤ +125°C for Extended				
Param No.	**Symbol**	**Characteristic(1)**	**Min**	**Typ(2)**	**Max**	**Units**	**Conditions**
SP70	TscP	Maximum SCKx Input Frequency	—	—	15	MHz	See **Note 3**
SP72	TscF	SCKx Input Fall Time	—	—	—	ns	See Parameter DO32 and **Note 4**
SP73	TscR	SCKx Input Rise Time	—	—	—w	ns	See Parameter DO31 and **Note 4**
SP30	TdoF	SDOx Data Output Fall Time	—	—	—	ns	See Parameter DO32 and **Note 4**
SP31	TdoR	SDOx Data Output Rise Time	—	—	—	ns	See Parameter DO31 and **Note 4**
SP35	TscH2doV, TscL2doV	SDOx Data Output Valid after SCKx Edge	—	6	20	ns	
SP36	TdoV2scH, TdoV2scL	SDOx Data Output Setup to First SCKx Edge	30	—	—	ns	
SP40	TdiV2scH, TdiV2scL	Setup Time of SDIx Data Input to SCKx Edge	30	—	—	ns	
SP41	TscH2diL, TscL2diL	Hold Time of SDIx Data Input to SCKx Edge	30	—	—	ns	
SP50	TssL2scH, TssL2scL	$\overline{SSx}$ ↓ to SCKx ↑ or SCKx Input	120	—	—	ns	
SP51	TssH2doZ	$\overline{SSx}$ ↑ to SDOx Output High-Impedance	10	—	50	ns	See **Note 4**
SP52	TscH2ssH TscL2ssH	$\overline{SSx}$ after SCKx Edge	1.5 TCY + 40	—	—	ns	See **Note 4**

Note 1: These parameters are characterized, but are not tested in manufacturing.

2: Data in “Typ” column is at 3.3V, +25°C unless otherwise stated.

3: The minimum clock period for SCKx is 66.7 ns. Therefore, the SCK clock generated by the Master must not violate this specification.

4: Assumes 50 pF load on all SPIx pins.

FIGURE 26-26: SPIx SLAVE MODE (FULL-DUPLEX, CKE = 0, CKP = 0, SMP = 0) TIMING CHARACTERISTICS FOR dsPIC33FJ32(GP/MC)10X

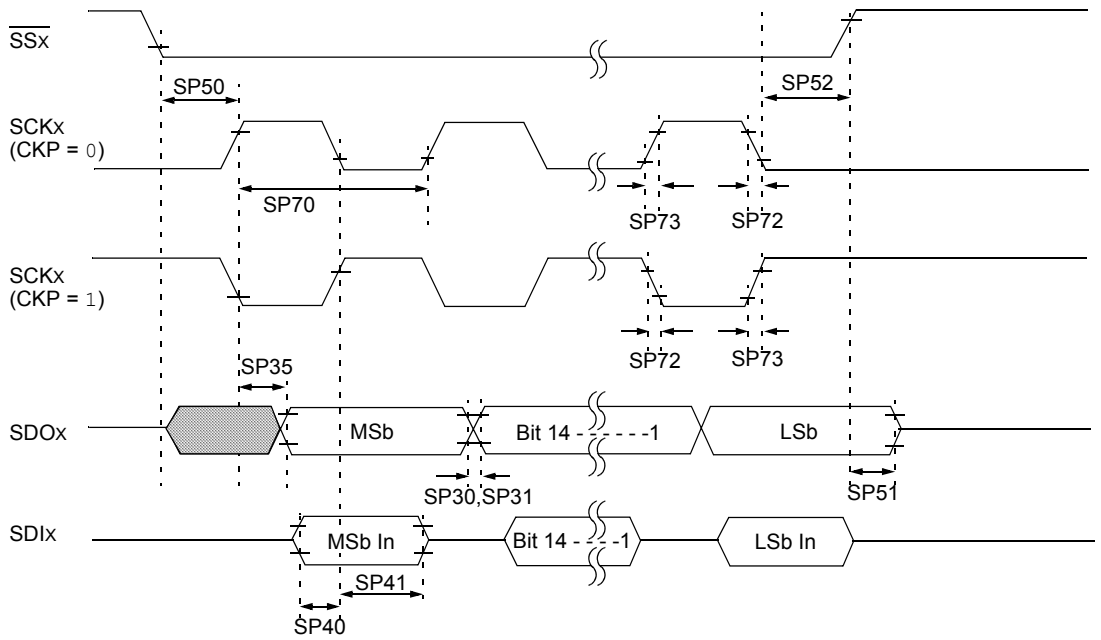

Note: Refer to Figure 26-1 for load conditions.

© 2011-2012 Microchip Technology Inc.

TABLE 26-44: SPIx SLAVE MODE (FULL-DUPLEX, CKE = 0, CKP = 0, SMP = 0) TIMING REQUIREMENTS FOR dsPIC33FJ32(GP/MC)10X

AC CHARACTERISTICS			Standard Operating Conditions: 3.0V to 3.6V (unless otherwise stated) Operating temperature -40°C ≤ TA ≤ +85°C for Industrial -40°C ≤ TA ≤ +125°C for Extended				
Param No.	**Symbol**	**Characteristic(1)**	**Min**	**Typ(2)**	**Max**	**Units**	**Conditions**
SP70	TscP	Maximum SCKx Input Frequency	—	—	11	MHz	See **Note 3**
SP72	TscF	SCKx Input Fall Time	—	—	—	ns	See Parameter DO32 and **Note 4**
SP73	TscR	SCKx Input Rise Time	—	—	—	ns	See Parameter DO31 and **Note 4**
SP30	TdoF	SDOx Data Output Fall Time	—	—	—	ns	See Parameter DO32 and **Note 4**
SP31	TdoR	SDOx Data Output Rise Time	—	—	—	ns	See Parameter DO31 and **Note 4**
SP35	TscH2doV, TscL2doV	SDOx Data Output Valid after SCKx Edge	—	6	20	ns	
SP36	TdoV2scH, TdoV2scL	SDOx Data Output Setup to First SCKx Edge	30	—	—	ns	
SP40	TdiV2scH, TdiV2scL	Setup Time of SDIx Data Input to SCKx Edge	30	—	—	ns	
SP41	TscH2diL, TscL2diL	Hold Time of SDIx Data Input to SCKx Edge	30	—	—	ns	
SP50	TssL2scH, TssL2scL	$\overline{SSx}$ ↓ to SCKx ↑ or SCKx Input	120	—	—	ns	
SP51	TssH2doZ	$\overline{SSx}$ ↑ to SDOx Output High-Impedance	10	—	50	ns	See **Note 4**
SP52	TscH2ssH TscL2ssH	$\overline{SSx}$ after SCKx Edge	1.5 TCY + 40	—	—	ns	See **Note 4**

Note 1: These parameters are characterized, but are not tested in manufacturing.

2: Data in “Typ” column is at 3.3V, +25°C unless otherwise stated.

3: The minimum clock period for SCKx is 91 ns. Therefore, the SCK clock generated by the Master must not violate this specification.

4: Assumes 50 pF load on all SPIx pins.

FIGURE 26-27: I2Cx BUS START/STOP BITS TIMING CHARACTERISTICS (MASTER MODE)

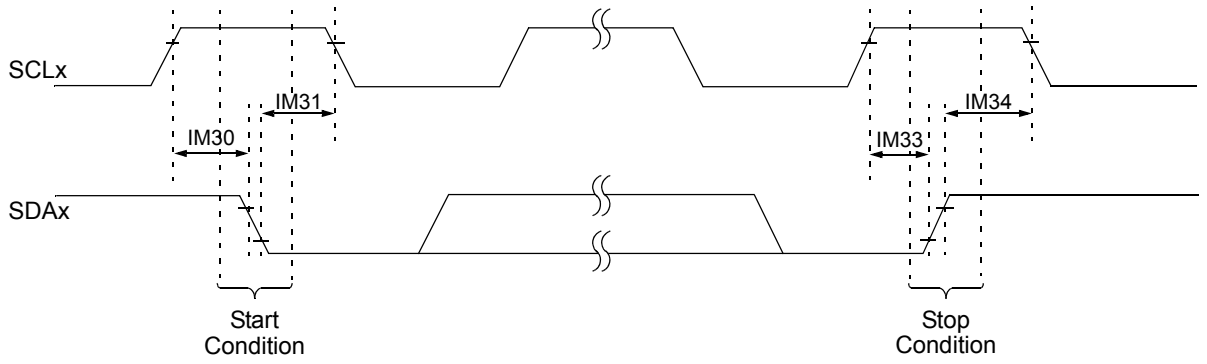

Note: Refer to Figure 26-1 for load conditions.

FIGURE 26-28: I2Cx BUS DATA TIMING CHARACTERISTICS (MASTER MODE)

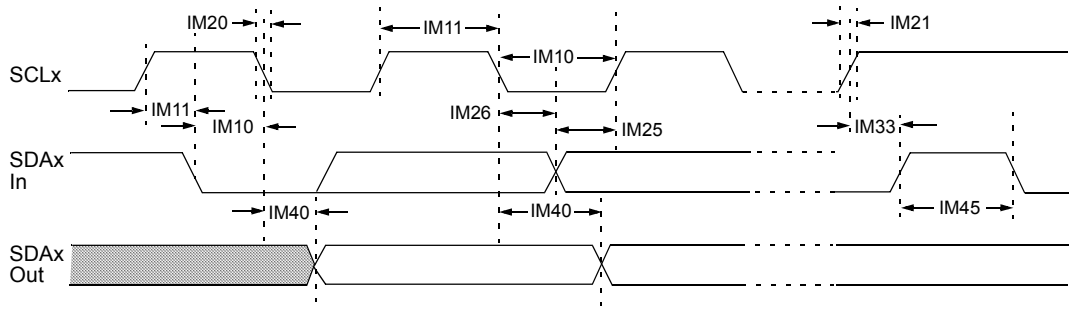

Note: Refer to Figure 26-1 for load conditions.

© 2011-2012 Microchip Technology Inc.

TABLE 26-45: I2Cx BUS DATA TIMING REQUIREMENTS (MASTER MODE)

AC CHARACTERISTICS				Standard Operating Conditions: 3.0V to 3.6V (unless otherwise stated) Operating temperature -40°C ≤ TA ≤ +85°C for Industrial -40°C ≤ TA ≤ +125°C for Extended			
Param No.	**Symbol**	**Characteristic**		**Min(1)**	**Max**	**Units**	**Conditions**
IM10	TLO:SCL	Clock Low Time	100 kHz mode	TCY/2 (BRG + 1)	—	μs	
			400 kHz mode	TCY/2 (BRG + 1)	—	μs	
			1 MHz mode(2)	TCY/2 (BRG + 1)	—	μs	
IM11	THI:SCL	Clock High Time	100 kHz mode	TCY/2 (BRG + 1)	—	μs	
			400 kHz mode	TCY/2 (BRG + 1)	—	μs	
			1 MHz mode(2)	TCY/2 (BRG + 1)	—	μs	
IM20	TF:SCL	SDAx and SCLx Fall Time	100 kHz mode	—	300	ns	CB is specified to be from 10 to 400 pF
			400 kHz mode	20 + 0.1 CB	300	ns	
			1 MHz mode(2)	—	100	ns	
IM21	TR:SCL	SDAx and SCLx Rise Time	100 kHz mode	—	1000	ns	CB is specified to be from 10 to 400 pF
			400 kHz mode	20 + 0.1 CB	300	ns	
			1 MHz mode(2)	—	300	ns	
IM25	TSU:DAT	Data Input Setup Time	100 kHz mode	250	—	ns	
			400 kHz mode	100	—	ns	
			1 MHz mode(2)	40	—	ns	
IM26	THD:DAT	Data Input Hold Time	100 kHz mode	0	—	μs	
			400 kHz mode	0	0.9	μs	
			1 MHz mode(2)	0.2	—	μs	
IM30	TSU:STA	Start Condition Setup Time	100 kHz mode	TCY/2 (BRG + 1)	—	μs	Only relevant for Repeated Start condition
			400 kHz mode	TCY/2 (BRG + 1)	—	μs	
			1 MHz mode(2)	TCY/2 (BRG + 1)	—	μs	
IM31	THD:STA	Start Condition Hold Time	100 kHz mode	TCY/2 (BRG + 1)	—	μs	After this period the first clock pulse is generated
			400 kHz mode	TCY/2 (BRG + 1)	—	μs	
			1 MHz mode(2)	TCY/2 (BRG + 1)	—	μs	
IM33	TSU:STO	Stop Condition Setup Time	100 kHz mode	TCY/2 (BRG + 1)	—	μs	
			400 kHz mode	TCY/2 (BRG + 1)	—	μs	
			1 MHz mode(2)	TCY/2 (BRG + 1)	—	μs	
IM34	THD:STO	Stop Condition Hold Time	100 kHz mode	TCY/2 (BRG + 1)	—	ns	
			400 kHz mode	TCY/2 (BRG + 1)	—	ns	
			1 MHz mode(2)	TCY/2 (BRG + 1)	—	ns	
IM40	TAA:SCL	Output Valid from Clock	100 kHz mode	—	3500	ns	
			400 kHz mode	—	1000	ns	
			1 MHz mode(2)	—	400	ns	
IM45	TBF:SDA	Bus Free Time	100 kHz mode	4.7	—	μs	Time the bus must be free before a new transmission can start
			400 kHz mode	1.3	—	μs	
			1 MHz mode(2)	0.5	—	μs	
IM50	CB	Bus Capacitive Loading		—	400	pF	
IM51	TPGD	Pulse Gobbler Delay		65	390	ns	See **Note 3**

Note 1: BRG is the value of the I^{2}C™ Baud Rate Generator. Refer to **Section 19. "Inter-Integrated Circuit (I^{2}C™)"** (DS70195) in the "*dsPIC33F/PIC24H Family Reference Manual*". Please see the Microchip web site for the latest *"dsPIC33F/PIC24H Family Reference Manual"* sections.

2: Maximum pin capacitance = 10 pF for all I2Cx pins (for 1 MHz mode only).

3: Typical value for this parameter is 130 ns.

FIGURE 26-29: I2Cx BUS START/STOP BITS TIMING CHARACTERISTICS (SLAVE MODE)

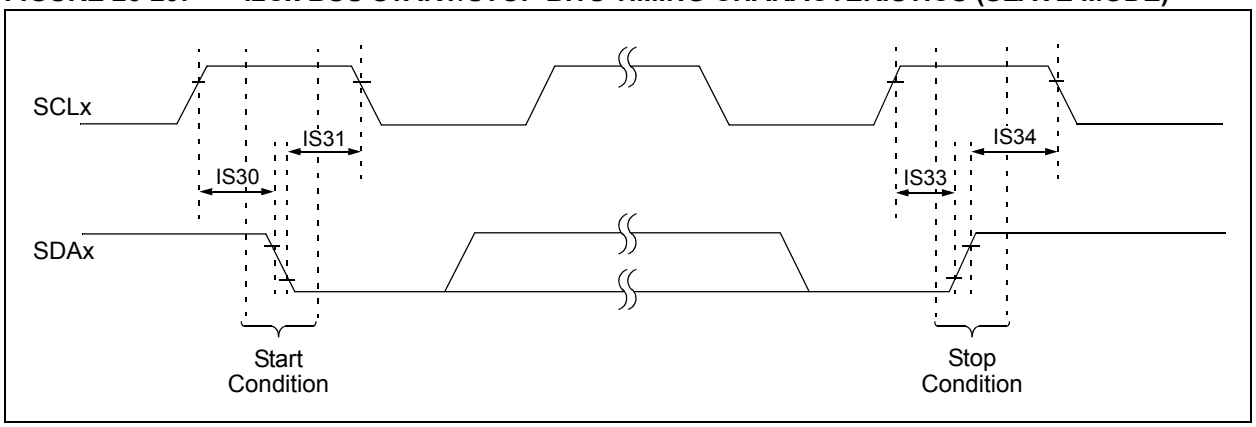

FIGURE 26-30: I2Cx BUS DATA TIMING CHARACTERISTICS (SLAVE MODE)

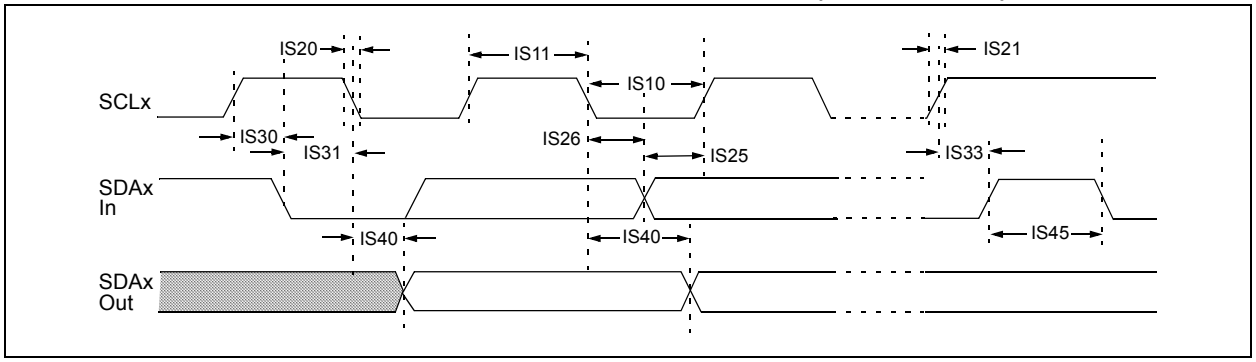

© 2011-2012 Microchip Technology Inc.

TABLE 26-46: I2Cx BUS DATA TIMING REQUIREMENTS (SLAVE MODE)

AC CHARACTERISTICS				Standard Operating Conditions: 3.0V to 3.6V (unless otherwise stated) Operating temperature -40°C ≤ TA ≤ +85°C for Industrial -40°C ≤ TA ≤ +125°C for Extended			
Param.	**Symbol**	**Characteristic**		**Min**	**Max**	**Units**	**Conditions**
IS10	TLO:SCL	Clock Low Time	100 kHz mode	4.7	—	μs	Device must operate at a minimum of 1.5 MHz
			400 kHz mode	1.3	—	μs	Device must operate at a minimum of 10 MHz
			1 MHz mode(1)	0.5	—	μs	
IS11	THI:SCL	Clock High Time	100 kHz mode	4.0	—	μs	Device must operate at a minimum of 1.5 MHz
			400 kHz mode	0.6	—	μs	Device must operate at a minimum of 10 MHz
			1 MHz mode(1)	0.5	—	μs	
IS20	TF:SCL	SDAx and SCLx Fall Time	100 kHz mode	—	300	ns	CB is specified to be from 10 to 400 pF
			400 kHz mode	20 + 0.1 CB	300	ns	
			1 MHz mode(1)	—	100	ns	
IS21	TR:SCL	SDAx and SCLx Rise Time	100 kHz mode	—	1000	ns	CB is specified to be from 10 to 400 pF
			400 kHz mode	20 + 0.1 CB	300	ns	
			1 MHz mode(1)	—	300	ns	
IS25	TSU:DAT	Data Input Setup Time	100 kHz mode	250	—	ns	
			400 kHz mode	100	—	ns	
			1 MHz mode(1)	100	—	ns	
IS26	THD:DAT	Data Input Hold Time	100 kHz mode	0	—	μs	
			400 kHz mode	0	0.9	μs	
			1 MHz mode(1)	0	0.3	μs	
IS30	TSU:STA	Start Condition Setup Time	100 kHz mode	4.7	—	μs	Only relevant for Repeated Start condition
			400 kHz mode	0.6	—	μs	
			1 MHz mode(1)	0.25	—	μs	
IS31	THD:STA	Start Condition Hold Time	100 kHz mode	4.0	—	μs	After this period, the first clock pulse is generated
			400 kHz mode	0.6	—	μs	
			1 MHz mode(1)	0.25	—	μs	
IS33	TSU:STO	Stop Condition Setup Time	100 kHz mode	4.7	—	μs	
			400 kHz mode	0.6	—	μs	
			1 MHz mode(1)	0.6	—	μs	
IS34	THD:STO	Stop Condition Hold Time	100 kHz mode	4000	—	ns	
			400 kHz mode	600	—	ns	
			1 MHz mode(1)	250		ns	
IS40	TAA:SCL	Output Valid from Clock	100 kHz mode	0	3500	ns	
			400 kHz mode	0	1000	ns	
			1 MHz mode(1)	0	350	ns	
IS45	TBF:SDA	Bus Free Time	100 kHz mode	4.7	—	μs	Time the bus must be free before a new transmission can start
			400 kHz mode	1.3	—	μs	
			1 MHz mode(1)	0.5	—	μs	
IS50	CB	Bus Capacitive Loading		—	400	pF	

Note 1: Maximum pin capacitance = 10 pF for all I2Cx pins (for 1 MHz mode only).

TABLE 26-47: ADC MODULE SPECIFICATIONS

AC CHARACTERISTICS			Standard Operating Conditions: 3.0V to 3.6V(6) (unless otherwise stated) Operating temperature -40°C ≤ TA ≤ +85°C for Industrial -40°C ≤ TA ≤ +125°C for Extended				
Param No.	**Symbol**	**Characteristic**	**Min.**	**Typ**	**Max.**	**Units**	**Conditions**
Device Supply							
AD01	AVDD	Module VDD Supply(2,4)	Greater of VDD – 0.3 or 2.9	—	Lesser of VDD + 0.3 or 3.6	V	
AD02	AVSS	Module VSS Supply(2,5)	VSS – 0.3	—	VSS + 0.3	V	
AD09	IAD	Operating Current	—	7.0	9.0	mA	See **Note 1**
Analog Input							
AD12	VINH	Input Voltage Range VINH(2)	VINL	—	AVDD	V	This voltage reflects S&H Channels 0, 1, 2 and 3 (CH0-CH3), positive input
AD13	VINL	Input Voltage Range VINL(2)	AVSS	—	AVSS + 1V	V	This voltage reflects S&H Channels 0, 1, 2 and 3 (CH0-CH3), negative input
AD17	RIN	Recommended Impedance of Analog Voltage Source(3)	—	—	200	Ω	

Note 1: These parameters are not characterized or tested in manufacturing.

2: These parameters are characterized, but are not tested in manufacturing.

3: These parameters are assured by design, but are not characterized or tested in manufacturing.

4: This pin may not be available on all devices; in which case, this pin will be connected to VDD internally. See the **"Pin Diagrams"** section for availability.

5: This pin may not be available on all devices; in which case, this pin will be connected to VSS internally. See the **"Pin Diagrams"** section for availability.

6: Overall functional device operation at VBOR < VDD < VDDMIN is ensured but not characterized. All device analog modules, such as the ADC, etc., will function but with degraded performance below VDDMIN.

© 2011-2012 Microchip Technology Inc.

TABLE 26-48: 10-BIT ADC MODULE SPECIFICATIONS

AC CHARACTERISTICS			Standard Operating Conditions: 3.0V to 3.6V[4] (unless otherwise stated) Operating temperature -40°C ≤ TA ≤ +85°C for Industrial -40°C ≤ TA ≤ +125°C for Extended				
Param No.	**Symbol**	**Characteristic**	**Min.**	**Typ**	**Max.**	**Units**	**Conditions**
10-Bit ADC Accuracy – Measurements with AVDD/AVSS[3]							
AD20b	Nr	Resolution	10 Data Bits			bits	
AD21b	INL	Integral Nonlinearity	-1	—	+1	LSb	VINL = AVSS = 0V, AVDD = 3.6V
AD22b	DNL	Differential Nonlinearity	>-1	—	<1	LSb	VINL = AVSS = 0V, AVDD = 3.6V
AD23b	GERR	Gain Error	3	7	15	LSb	VINL = AVSS = 0V, AVDD = 3.6V
AD24b	EOFF	Offset Error	1.5	3	7	LSb	VINL = AVSS = 0V, AVDD = 3.6V
AD25b	—	Monotonicity	—	—	—	—	Guaranteed[1]
Dynamic Performance (10-Bit Mode)[2]							
AD30b	THD	Total Harmonic Distortion	—	—	-64	dB	
AD31b	SINAD	Signal to Noise and Distortion	57	58.5	—	dB	
AD32b	SFDR	Spurious Free Dynamic Range	72	—	—	dB	
AD33b	FNYQ	Input Signal Bandwidth	—	—	550	kHz	
AD34b	ENOB	Effective Number of Bits	9.16	9.4	—	bits	

Note 1: The Analog-to-Digital conversion result never decreases with an increase in the input voltage and has no missing codes.

2: These parameters are characterized by similarity, but are not tested in manufacturing.

3: These parameters are characterized, but are tested at 20 ksps only.

4: Overall functional device operation at VBOR < VDD < VDDMIN is guaranteed but not characterized. All device analog modules such as the ADC, etc., will function but with degraded performance below VDDMIN

FIGURE 26-31: ADC CONVERSION TIMING CHARACTERISTICS (CHPS<1:0> = 01, SIMSAM = 0, ASAM = 0, SSRC<2:0> = 000)

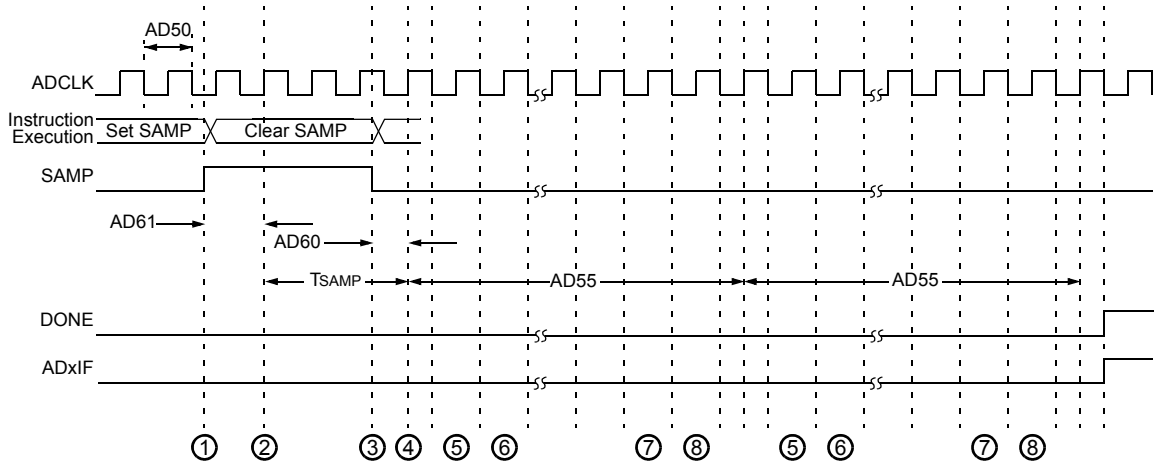

1. – Software sets ADxCON. SAMP to start sampling.
2. – Sampling starts after discharge period. TSAMP is described in **Section 16. "Analog-to-Digital Converter (ADC)"** (DS70183) in the "*dsPIC33F/PIC24H Family Reference Manual*".
3. – Software clears ADxCON. SAMP to start conversion.
4. – Sampling ends, conversion sequence starts.
5. – Convert bit 9.
6. – Convert bit 8.
7. – Convert bit 0.
8. – One TAD for end of conversion.

FIGURE 26-32: ADC CONVERSION TIMING CHARACTERISTICS (CHPS<1:0> = 01, SIMSAM = 0, ASAM = 1, SSRC<2:0> = 111, SAMC<4:0> = 00001)

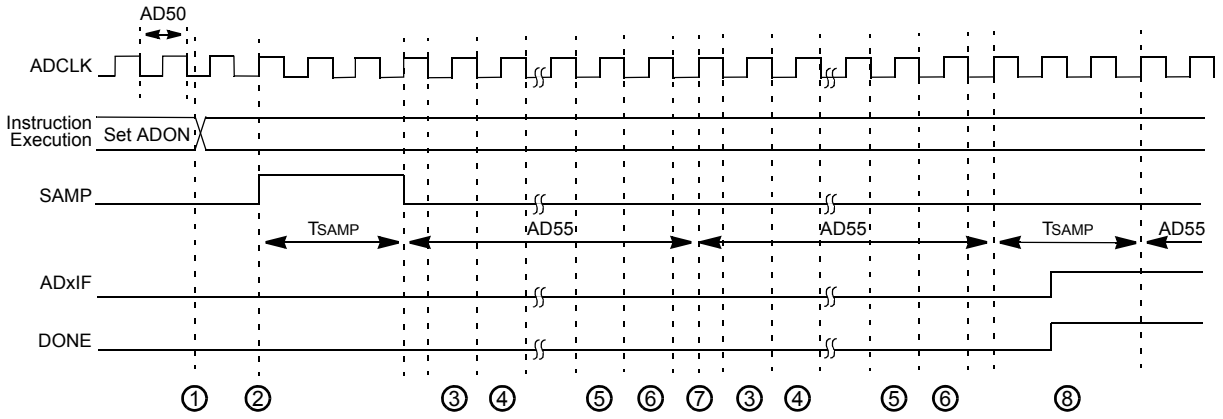

1. – Software sets ADxCON. ADON to start AD operation.
2. – Sampling starts after discharge period. TSAMP is described in **Section 16. "Analog-to-Digital Converter (ADC)"** (DS70183) in the *"dsPIC33F/PIC24H Family Reference Manual"*.
3. – Convert bit 9.
4. – Convert bit 8.
5. – Convert bit 0.
6. – One TAD for end of conversion.
7. – Begin conversion of next channel.
8. – Sample for time specified by SAMC<4:0>.

© 2011-2012 Microchip Technology Inc.

TABLE 26-49: 10-BIT ADC CONVERSION TIMING REQUIREMENTS

AC CHARACTERISTICS			Standard Operating Conditions: 3.0V to 3.6V (unless otherwise stated) Operating temperature -40°C ≤ TA ≤ +85°C for Industrial -40°C ≤ TA ≤ +125°C for Extended				
Param No.	**Symbol**	**Characteristic**	**Min.**	**Typ(1)**	**Max.**	**Units**	**Conditions**
Clock Parameters(2)							
AD50	TAD	ADC Clock Period	76	—	—	ns	
AD51	tRC	ADC Internal RC Oscillator Period	—	250	—	ns	
Conversion Rates							
AD55	tCONV	Conversion Time	—	12 TAD	—	—	
AD56	FCNV	Throughput Rate	—	—	1.1	Msps	
AD57	TSAMP	Sample Time	2.0 TAD	—	—	—	
Timing Parameters							
AD60	tPCS	Conversion Start from Sample Trigger(1)	2.0 TAD	—	3.0 TAD	—	Auto-Convert Trigger (SSRC<2:0> = 111) not selected
AD61	tPSS	Sample Start from Setting Sample (SAMP) bit(1)	2.0 TAD	—	3.0 TAD	—	
AD62	tCSS	Conversion Completion to Sample Start (ASAM = 1)(1)	—	0.5 TAD	—	—	
AD63	tDPU	Time to Stabilize Analog Stage from ADC Off to ADC On(1)	—	—	20	μs	

Note 1: These parameters are characterized but not tested in manufacturing.

2: Because the sample caps will eventually lose charge, clock rates below 10 kHz may affect linearity performance, especially at elevated temperatures.

TABLE 26-50: COMPARATOR TIMING SPECIFICATIONS

AC CHARACTERISTICS			Standard Operating Conditions: 3.0V to 3.6V (unless otherwise stated) Operating temperature -40°C ≤ TA ≤ +85°C for Industrial -40°C ≤ TA ≤ +125°C for Extended				
Param No.	**Symbol**	**Characteristic**	**Min.**	**Typ**	**Max.**	**Units**	**Conditions**
300	TRESP	Response Time(1,2)	—	150	400	ns	
301	TMC2OV	Comparator Mode Change to Output Valid(1)	—	—	10	μs	
302	TON2OV	Comparator Enabled to Output Valid(1)	—	—	10	μs	

Note 1: Parameters are characterized but not tested.

2: Response time is measured with one comparator input at (VDD – 1.5)/2, while the other input transitions from VSS to VDD.

TABLE 26-51: COMPARATOR MODULE SPECIFICATIONS

DC CHARACTERISTICS			Standard Operating Conditions: 3.0V to 3.6V (unless otherwise stated) Operating temperature -40°C ≤ TA ≤ +85°C for Industrial -40°C ≤ TA ≤ +125°C for Extended				
Param No.	**Symbol**	**Characteristic**	**Min.**	**Typ**	**Max.**	**Units**	**Conditions**
D300	VIOFF	Input Offset Voltage(1)	-20	±10	20	mV	
D301	VICM	Input Common-Mode Voltage(1)	0	—	AVDD – 1.5V	V	
D302	CMRR	Common-Mode Rejection Ratio(1)	-54	—	—	dB	
D305	IVREF	Internal Voltage Reference(1)	1.116	1.24	1.364	V	

Note 1: Parameters are characterized but not tested.

TABLE 26-52: COMPARATOR VOLTAGE REFERENCE SETTLING TIME SPECIFICATIONS

AC CHARACTERISTICS			Standard Operating Conditions: 3.0V to 3.6V (unless otherwise stated) Operating temperature -40°C ≤ TA ≤ +85°C for Industrial -40°C ≤ TA ≤ +125°C for Extended				
Param No.	**Symbol**	**Characteristic**	**Min.**	**Typ**	**Max.**	**Units**	**Conditions**
VR310	TSET	Settling Time(1)	—	—	10	μs	

Note 1: Setting time measured while CVRR = `1` and the CVR<3:0> bits transition from ‘`0000`’ to ‘`1111`’.

© 2011-2012 Microchip Technology Inc.

TABLE 26-53: COMPARATOR VOLTAGE REFERENCE SPECIFICATIONS

DC CHARACTERISTICS			Standard Operating Conditions:3.0V to 3.6V (unless otherwise stated) Operating temperature -40°C ≤ TA ≤ +85°C for Industrial -40°C ≤ TA ≤ +125°C for Extended				
Param No.	**Symbol**	**Characteristic**	**Min.**	**Typ**	**Max.**	**Units**	**Conditions**
VRD310	CVRES	Resolution	CVRSRC/24	—	CVRSRC/32	LSb	
VRD311	CVRAA	Absolute Accuracy	—	—	0.5	LSb	
VRD312	CVRUR	Unit Resistor Value (R)	—	2k	—	Ω	

TABLE 26-54: CTMU CURRENT SOURCE SPECIFICATIONS

DC CHARACTERISTICS			Standard Operating Conditions:3.0V to 3.6V (unless otherwise stated) Operating temperature -40°C ≤ TA ≤ +85°C for Industrial -40°C ≤ TA ≤ +125°C for Extended				
Param No.	**Symbol**	**Characteristic**	**Min.**	**Typ**	**Max.**	**Units**	**Conditions**
CTMU Current Source							
CTMUI1	IOUT1	Base Range(1)	320	550	980	na	IRNG<1:0> bits (CTMUICON<9:8>) = 0b01
CTMUI2	IOUT2	10x Range(1)	3.2	5.5	9.8	µA	IRNG<1:0> bits (CTMUICON<9:8>) = 0b10
CTMUI3	IOUT3	100x Range(1)	32	55	98	µA	IRNG<1:0> bits (CTMUICON<9:8>) = 0b11
Internal Diode							
CTMUFV1	VF	Forward Voltage(2)	—	0.77	—	V	IRNG<1:0> bits (CTMUICON<9:8>) = 0b11 @ +25ºC
CTMUFV2	VFVR	Forward Voltage Rate(2)	—	-1.38	—	mV/ºC	IRNG<1:0> bits (CTMUICON<9:8>) = 0b11

Note 1: Nominal value at center point of current trim range (ITRIM<5:0> bits (CTMUICON<15:10>) = 0b000000).

2: ADC module configured for conversion speed of 500 ksps. Parameters are characterized but not tested in manufacturing.

FIGURE 26-33: FORWARD VOLTAGE VERSUS TEMPERATURE

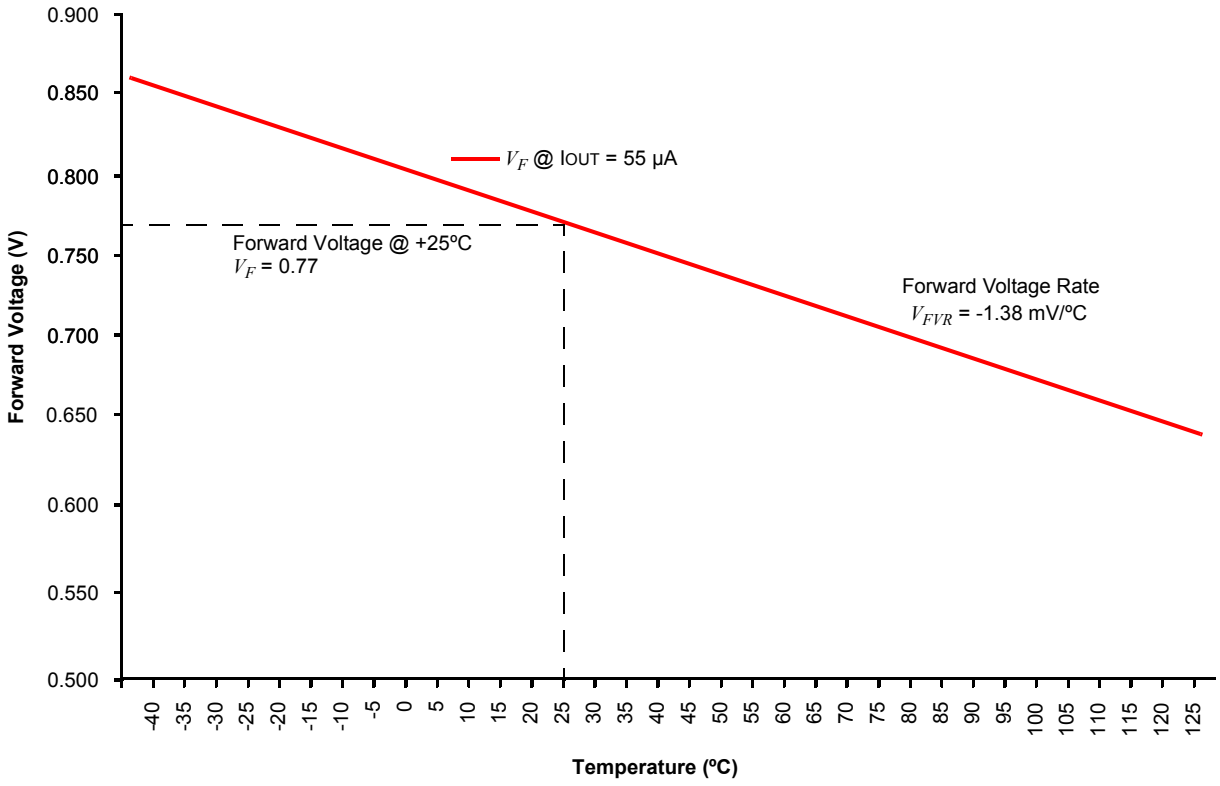

Note: This graph is a statistical summary based on a limited number of samples and this data is characterized but not tested in manufacturing.

© 2011-2012 Microchip Technology Inc.

27.0 PACKAGING INFORMATION

27.1 Package Marking Information

18-Lead PDIP

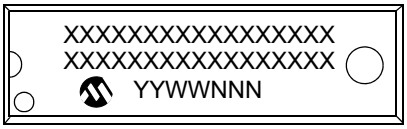

Example

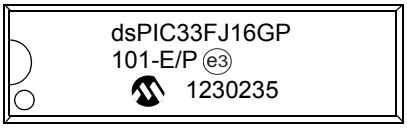

18-Lead SOIC

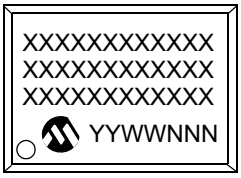

Example

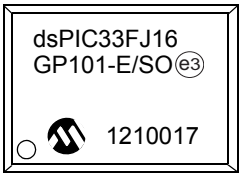

20-Lead PDIP

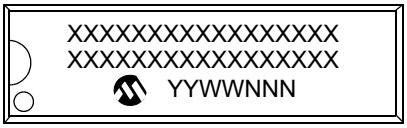

Example

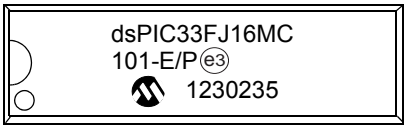

20-Lead SSOP

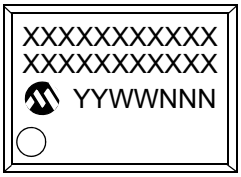

Example

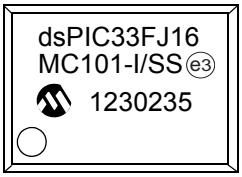

20-Lead SOIC

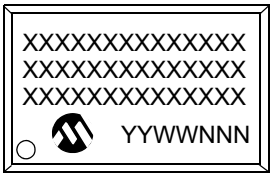

Example

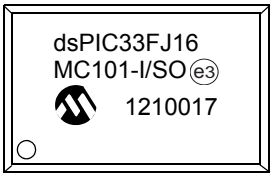

Legend:	XX...X	Customer-specific information
	Y	Year code (last digit of calendar year)
	YY	Year code (last 2 digits of calendar year)
	WW	Week code (week of January 1 is week ‘01’)
	NNN	Alphanumeric traceability code
	e3	Pb-free JEDEC designator for Matte Tin (Sn)
	*	This package is Pb-free. The Pb-free JEDEC designator (e3) can be found on the outer packaging for this package.
Note:	If the full Microchip part number cannot be marked on one line, it is carried over to the next line, thus limiting the number of available characters for customer-specific information.	

27.1 Package Marking Information (Continued)

28-Lead SPDIP

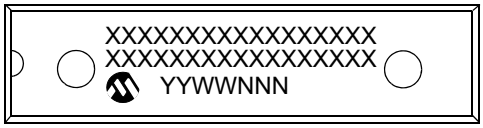

Example

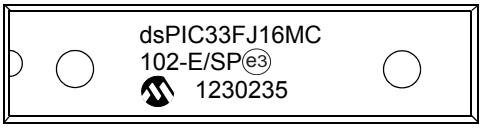

28-Lead SOIC

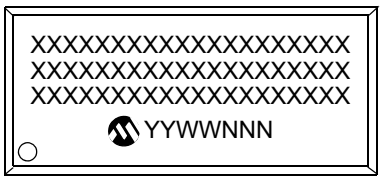

Example

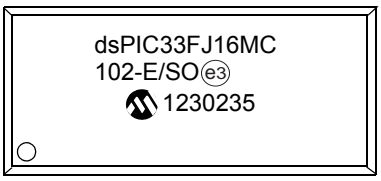

28-Lead SSOP

Example

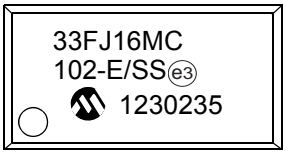

28-Lead QFN

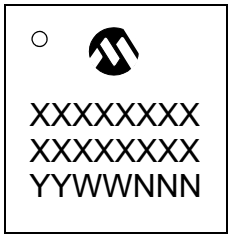

Example

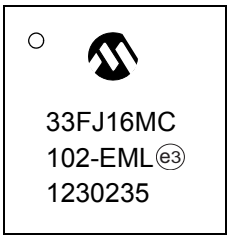

36-Lead VTLA

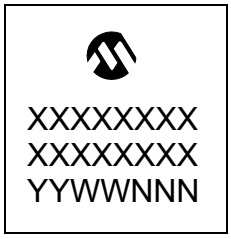

Example

Legend:	XX...X	Customer-specific information
	Y	Year code (last digit of calendar year)
	YY	Year code (last 2 digits of calendar year)
	WW	Week code (week of January 1 is week ‘01’)
	NNN	Alphanumeric traceability code
	e3	Pb-free JEDEC designator for Matte Tin (Sn)
	*	This package is Pb-free. The Pb-free JEDEC designator (e3) can be found on the outer packaging for this package.

Note: If the full Microchip part number cannot be marked on one line, it is carried over to the next line, thus limiting the number of available characters for customer-specific information.

© 2011-2012 Microchip Technology Inc.

27.1 Package Marking Information (Continued)

44-Lead QFN

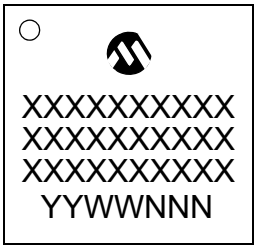

Example

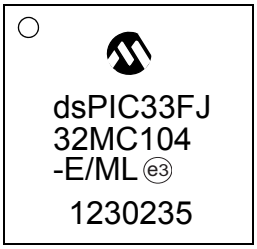

44-Lead TQFP

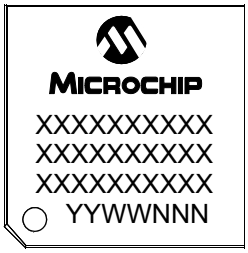

Example

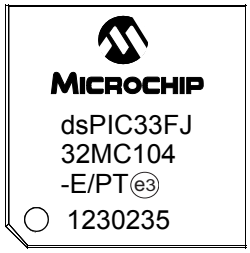

44-Lead VTLA

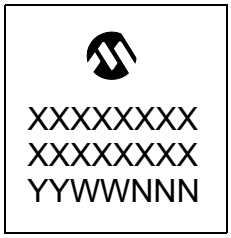

Example

27.2 Package Details

18-Lead Plastic Dual In-Line (P) – 300 mil Body [PDIP]

Note: For the most current package drawings, please see the Microchip Packaging Specification located at http://www.microchip.com/packaging

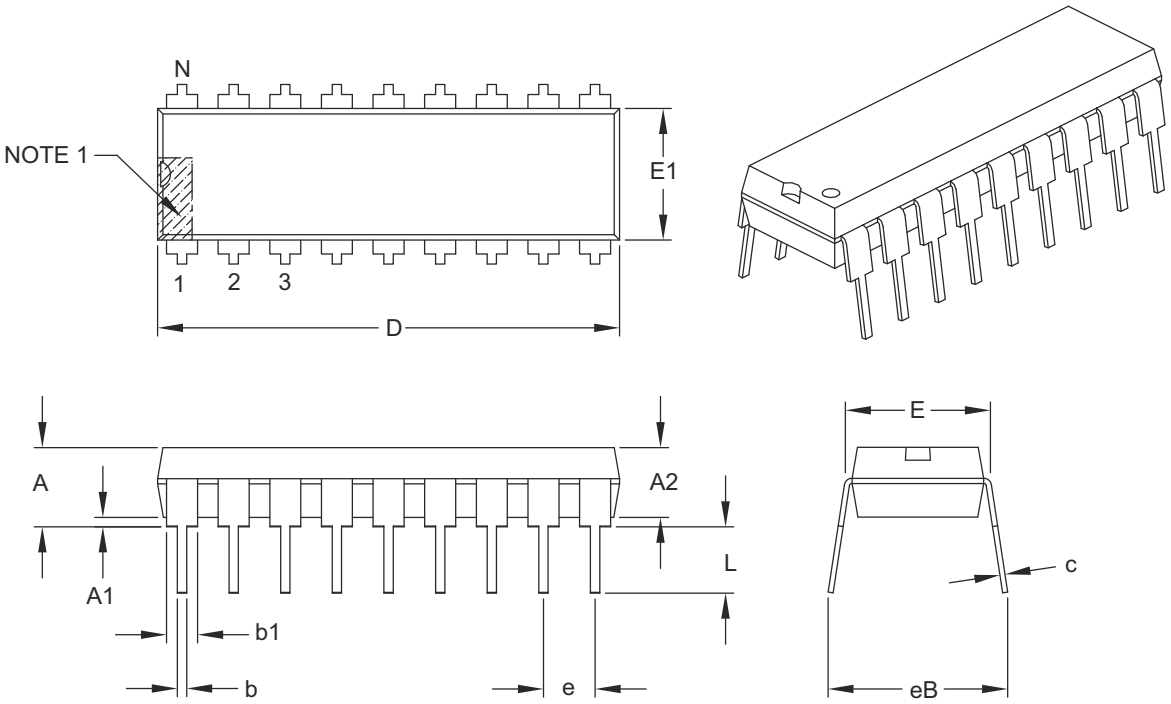

Units		INCHES		
Dimension Limits		MIN	NOM	MAX
Number of Pins	N	18		
Pitch	e	.100 BSC		
Top to Seating Plane	A	–	–	.210
Molded Package Thickness	A2	.115	.130	.195
Base to Seating Plane	A1	.015	–	–
Shoulder to Shoulder Width	E	.300	.310	.325
Molded Package Width	E1	.240	.250	.280
Overall Length	D	.880	.900	.920
Tip to Seating Plane	L	.115	.130	.150
Lead Thickness	c	.008	.010	.014
Upper Lead Width	b1	.045	.060	.070
Lower Lead Width	b	.014	.018	.022
Overall Row Spacing §	eB	–	–	.430

Notes:

1. Pin 1 visual index feature may vary, but must be located within the hatched area.
2. § Significant Characteristic.
3. Dimensions D and E1 do not include mold flash or protrusions. Mold flash or protrusions shall not exceed .010" per side.
4. Dimensioning and tolerancing per ASME Y14.5M.

   BSC: Basic Dimension. Theoretically exact value shown without tolerances.

Microchip Technology Drawing C04-007B

© 2011-2012 Microchip Technology Inc.

18-Lead Plastic Small Outline (SO) - Wide, 7.50 mm Body [SOIC]

Note: For the most current package drawings, please see the Microchip Packaging Specification located at http://www.microchip.com/packaging

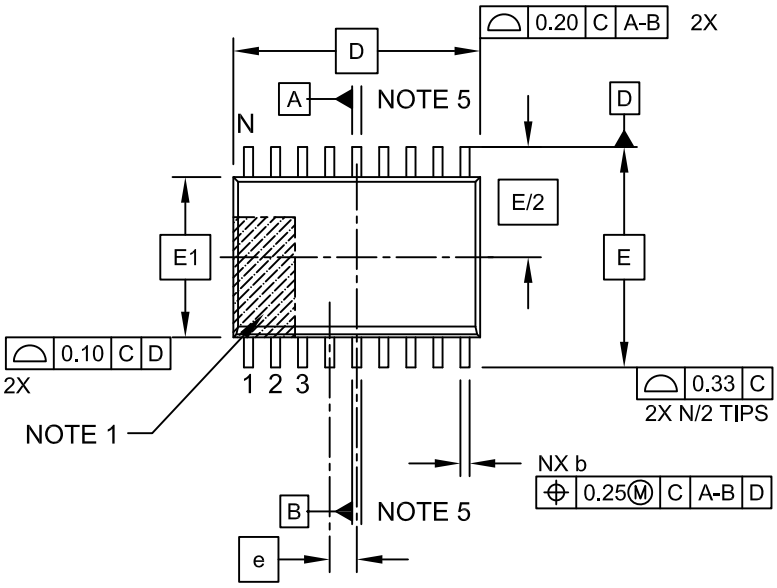

TOP VIEW

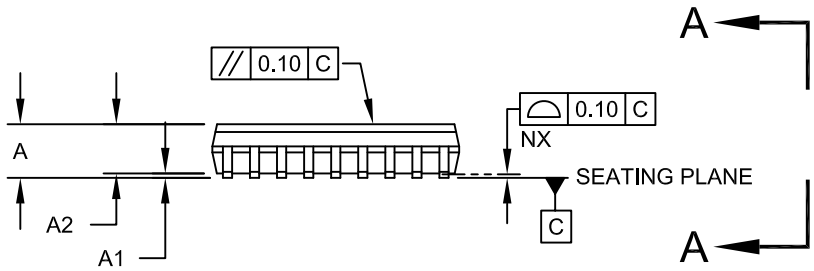

SIDE VIEW

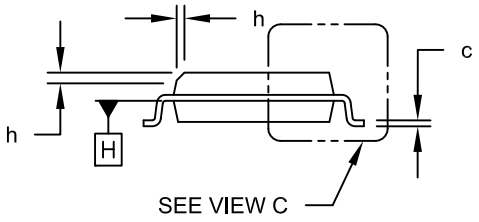

VIEW A-A

Microchip Technology Drawing C04-051C Sheet 1 of 2

18-Lead Plastic Small Outline (SO) - Wide, 7.50 mm Body [SOIC]

Note: For the most current package drawings, please see the Microchip Packaging Specification located at http://www.microchip.com/packaging

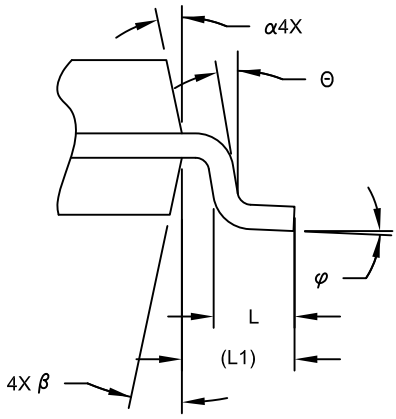

VIEW C

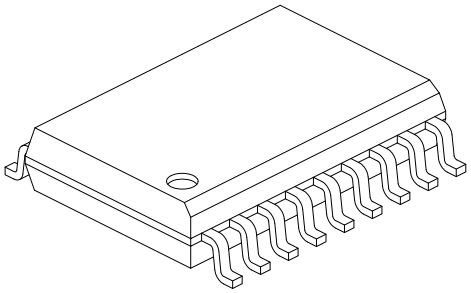

Units		MILLIMETERS		
Dimension Limits		MIN	NOM	MAX
Number of Pins	N	18		
Pitch	e	1.27 BSC		
Overall Height	A	-	-	2.65
Molded Package Thickness	A2	2.05	-	-
Standoff §	A1	0.10	-	0.30
Overall Width	E	10.30 BSC		
Molded Package Width	E1	7.50 BSC		
Overall Length	D	11.55 BSC		
Chamfer (Optional)	h	0.25	-	0.75
Foot Length	L	0.40	-	1.27
Footprint	L1	1.40 REF		
Lead Angle	Θ	0°	-	-
Foot Angle	φ	0°	-	8°
Lead Thickness	c	0.20	-	0.33
Lead Width	b	0.31	-	0.51
Mold Draft Angle Top	α	5°	-	15°
Mold Draft Angle Bottom	β	5°	-	15°

Notes:

1. Pin 1 visual index feature may vary, but must be located within the hatched area.
2. § Significant Characteristic
3. Dimension D does not include mold flash, protrusions or gate burrs, which shall not exceed 0.15 mm per end. Dimension E1 does not include interlead flash or protrusion, which shall not exceed 0.25 mm per side.
4. Dimensioning and tolerancing per ASME Y14.5M
   BSC: Basic Dimension. Theoretically exact value shown without tolerances.
   REF: Reference Dimension, usually without tolerance, for information purposes only.
5. Datums A & B to be determined at Datum H.

Microchip Technology Drawing No. C04-051C Sheet 2 of 2

© 2011-2012 Microchip Technology Inc.

18-Lead Plastic Small Outline (SO) - Wide, 7.50 mm Body [SOIC]

Note: For the most current package drawings, please see the Microchip Packaging Specification located at http://www.microchip.com/packaging

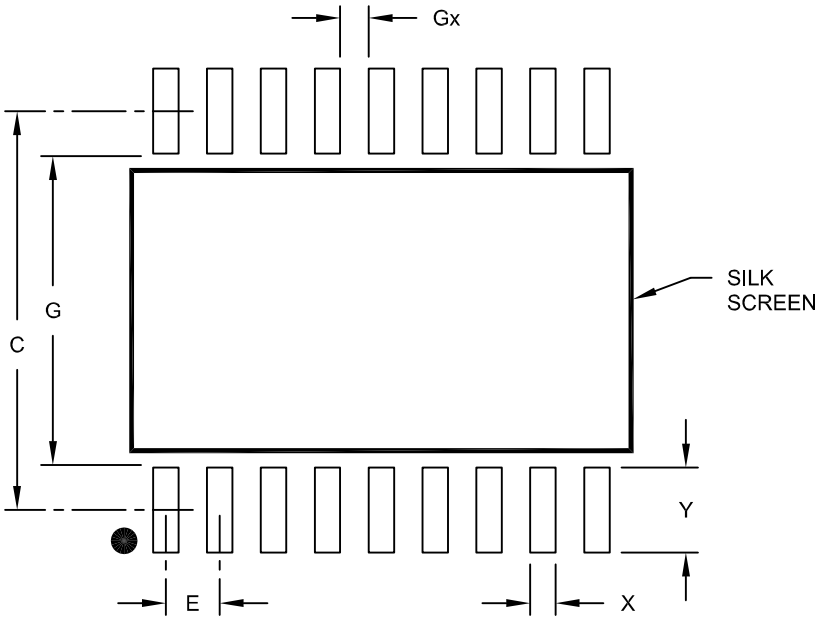

RECOMMENDED LAND PATTERN

Units		MILLIMETERS		
Dimension Limits		MIN	NOM	MAX
Contact Pitch	E	1.27 BSC		
Contact Pad Spacing	C		9.40	
Contact Pad Width	X			0.60
Contact Pad Length	Y			2.00
Distance Between Pads	Gx	0.67		
Distance Between Pads	G	7.40		

Notes:

1. Dimensioning and tolerancing per ASME Y14.5M

BSC: Basic Dimension. Theoretically exact value shown without tolerances.

Microchip Technology Drawing No. C04-2051A

20-Lead Plastic Dual In-Line (P) – 300 mil Body [PDIP]

Note: For the most current package drawings, please see the Microchip Packaging Specification located at http://www.microchip.com/packaging

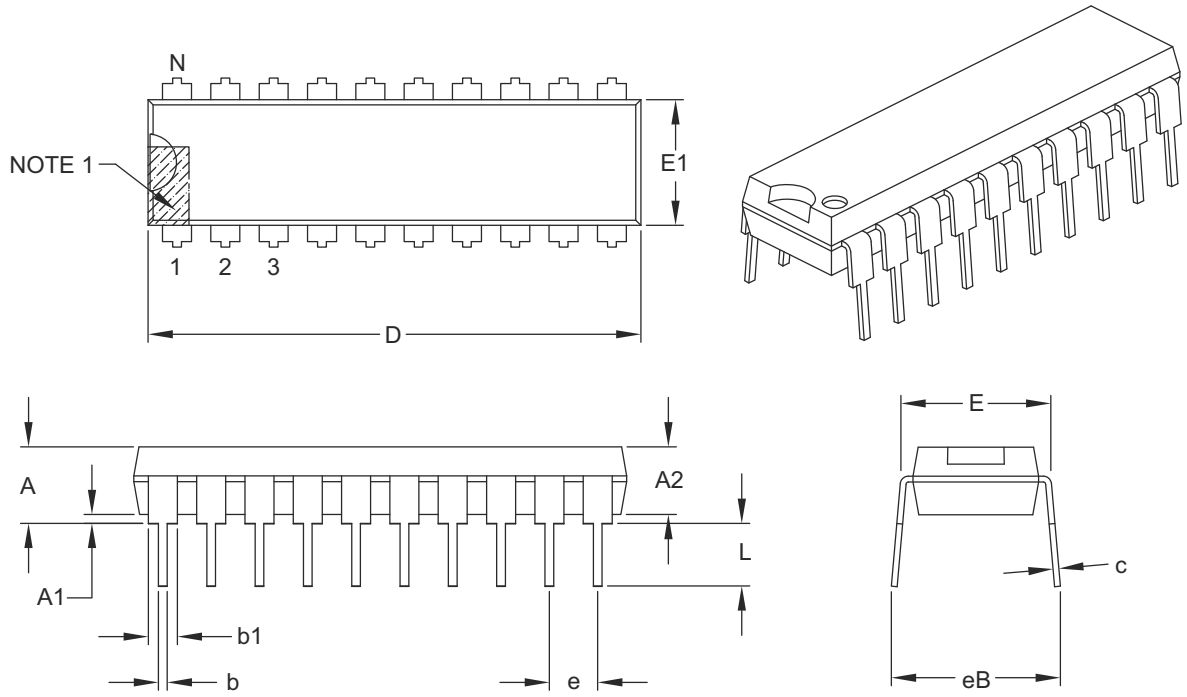

Units		INCHES		
Dimension Limits		MIN	NOM	MAX
Number of Pins	N	20		
Pitch	e	.100 BSC		
Top to Seating Plane	A	–	–	.210
Molded Package Thickness	A2	.115	.130	.195
Base to Seating Plane	A1	.015	–	–
Shoulder to Shoulder Width	E	.300	.310	.325
Molded Package Width	E1	.240	.250	.280
Overall Length	D	.980	1.030	1.060
Tip to Seating Plane	L	.115	.130	.150
Lead Thickness	c	.008	.010	.015
Upper Lead Width	b1	.045	.060	.070
Lower Lead Width	b	.014	.018	.022
Overall Row Spacing §	eB	–	–	.430

Notes:

1. Pin 1 visual index feature may vary, but must be located within the hatched area.
2. § Significant Characteristic.
3. Dimensions D and E1 do not include mold flash or protrusions. Mold flash or protrusions shall not exceed .010" per side.
4. Dimensioning and tolerancing per ASME Y14.5M.

   BSC: Basic Dimension. Theoretically exact value shown without tolerances.

Microchip Technology Drawing C04-019B

© 2011-2012 Microchip Technology Inc.

20-Lead Plastic Small Outline (SO) - Wide, 7.50 mm Body [SOIC]

Note: For the most current package drawings, please see the Microchip Packaging Specification located at http://www.microchip.com/packaging

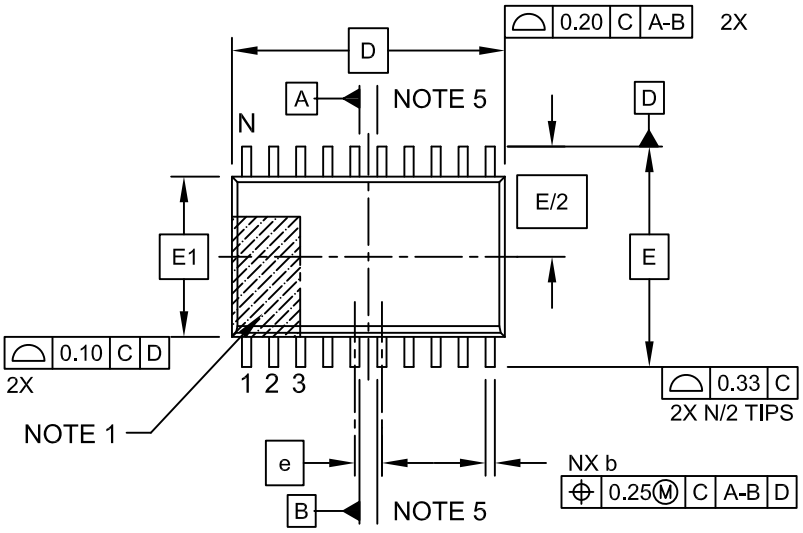

TOP VIEW

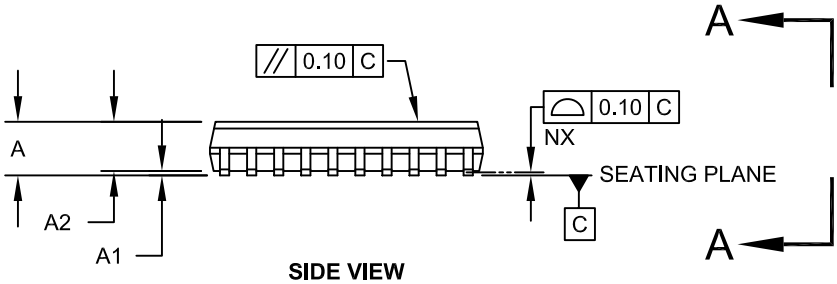

SIDE VIEW

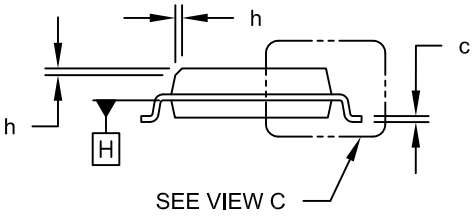

VIEW A-A

Microchip Technology Drawing C04-094C Sheet 1 of 2

20-Lead Plastic Small Outline (SO) - Wide, 7.50 mm Body [SOIC]

Note: For the most current package drawings, please see the Microchip Packaging Specification located at http://www.microchip.com/packaging

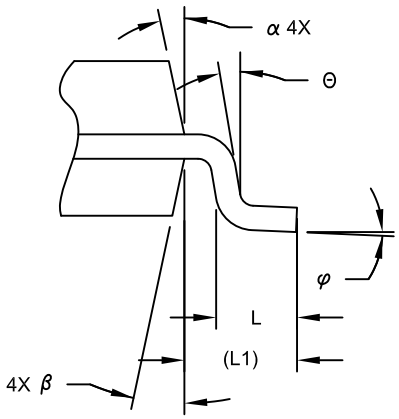

VIEW C

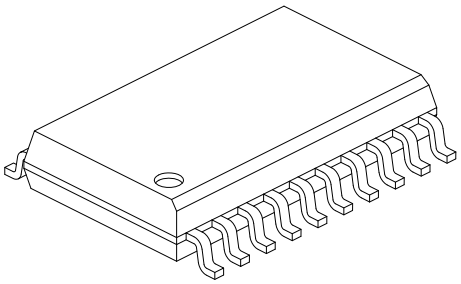

Units		MILLIMETERS		
Dimension Limits		MIN	NOM	MAX
Number of Pins	N	20		
Pitch	e	1.27 BSC		
Overall Height	A	-	-	2.65
Molded Package Thickness	A2	2.05	-	-
Standoff §	A1	0.10	-	0.30
Overall Width	E	10.30 BSC		
Molded Package Width	E1	7.50 BSC		
Overall Length	D	12.80 BSC		
Chamfer (Optional)	h	0.25	-	0.75
Foot Length	L	0.40	-	1.27
Footprint	L1	1.40 REF		
Lead Angle	Θ	0°	-	-
Foot Angle	φ	0°	-	8°
Lead Thickness	c	0.20	-	0.33
Lead Width	b	0.31	-	0.51
Mold Draft Angle Top	α	5°	-	15°
Mold Draft Angle Bottom	β	5°	-	15°

Notes:

1. Pin 1 visual index feature may vary, but must be located within the hatched area.
2. § Significant Characteristic
3. Dimension D does not include mold flash, protrusions or gate burrs, which shall not exceed 0.15 mm per end. Dimension E1 does not include interlead flash or protrusion, which shall not exceed 0.25 mm per side.
4. Dimensioning and tolerancing per ASME Y14.5M
   BSC: Basic Dimension. Theoretically exact value shown without tolerances.
   REF: Reference Dimension, usually without tolerance, for information purposes only.
5. Datums A & B to be determined at Datum H.

Microchip Technology Drawing No. C04-094C Sheet 2 of 2

© 2011-2012 Microchip Technology Inc.

20-Lead Plastic Small Outline (SO) - Wide, 7.50 mm Body [SOIC]

Note: For the most current package drawings, please see the Microchip Packaging Specification located at http://www.microchip.com/packaging

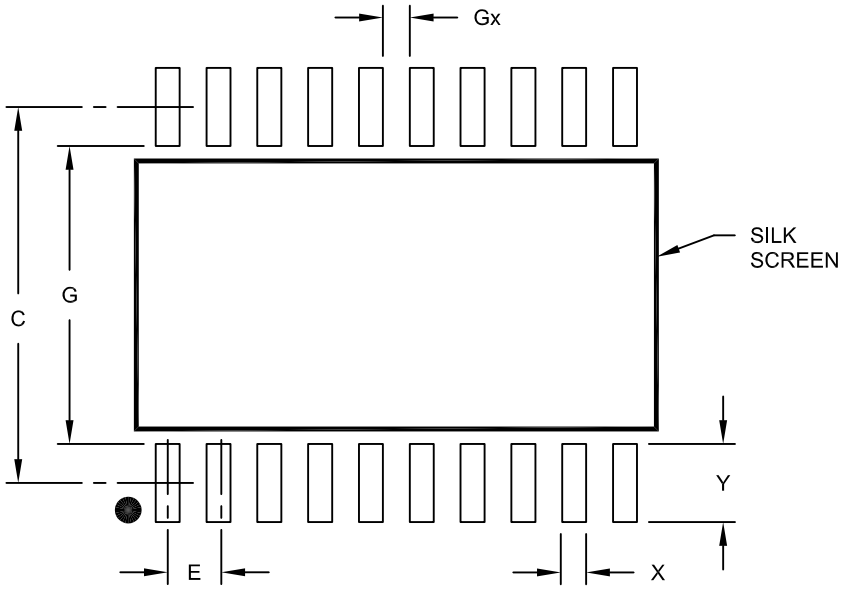

RECOMMENDED LAND PATTERN

Units		MILLIMETERS		
Dimension Limits		MIN	NOM	MAX
Contact Pitch	E	1.27 BSC		
Contact Pad Spacing	C		9.40	
Contact Pad Width (X20)	X			0.60
Contact Pad Length (X20)	Y			1.95
Distance Between Pads	Gx	0.67		
Distance Between Pads	G	7.45		

Notes:

1. Dimensioning and tolerancing per ASME Y14.5M
   BSC: Basic Dimension. Theoretically exact value shown without tolerances.

Microchip Technology Drawing No. C04-2094A

20-Lead Plastic Shrink Small Outline (SS) – 5.30 mm Body [SSOP]

Note: For the most current package drawings, please see the Microchip Packaging Specification located at http://www.microchip.com/packaging

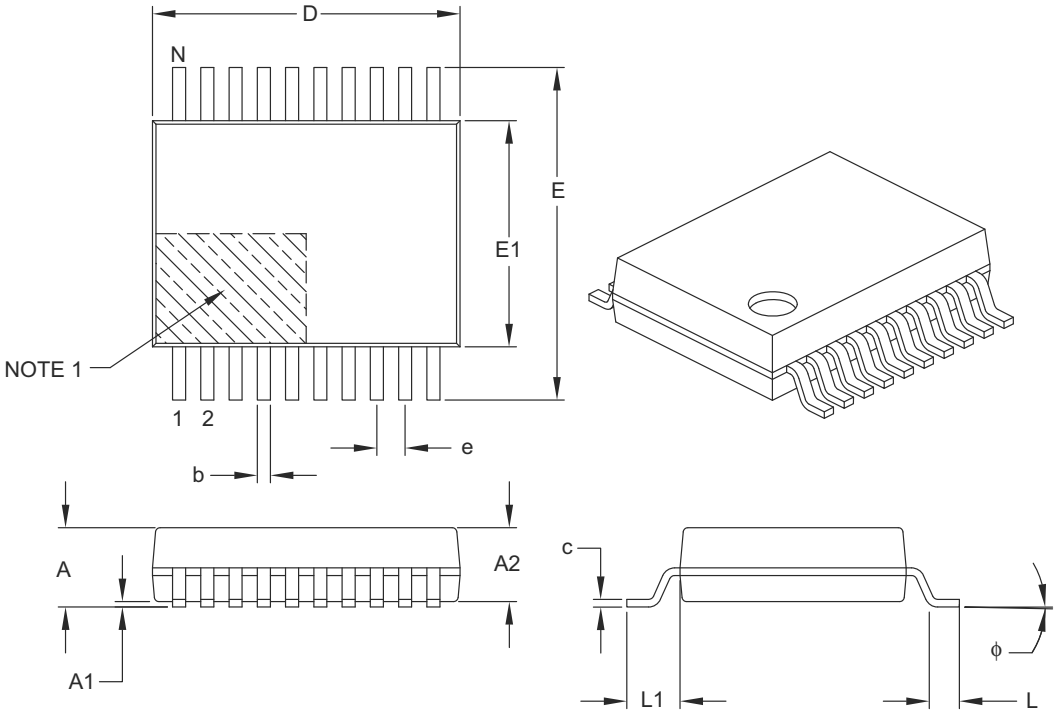

Units		MILLIMETERS		
Dimension Limits		MIN	NOM	MAX
Number of Pins	N	20		
Pitch	e	0.65 BSC		
Overall Height	A	–	–	2.00
Molded Package Thickness	A2	1.65	1.75	1.85
Standoff	A1	0.05	–	–
Overall Width	E	7.40	7.80	8.20
Molded Package Width	E1	5.00	5.30	5.60
Overall Length	D	6.90	7.20	7.50
Foot Length	L	0.55	0.75	0.95
Footprint	L1	1.25 REF		
Lead Thickness	c	0.09	–	0.25
Foot Angle	ϕ	0°	4°	8°
Lead Width	b	0.22	–	0.38

Notes:

1. Pin 1 visual index feature may vary, but must be located within the hatched area.
2. Dimensions D and E1 do not include mold flash or protrusions. Mold flash or protrusions shall not exceed 0.20 mm per side.
3. Dimensioning and tolerancing per ASME Y14.5M.

   BSC: Basic Dimension. Theoretically exact value shown without tolerances.

   REF: Reference Dimension, usually without tolerance, for information purposes only.

Microchip Technology Drawing C04-072B

© 2011-2012 Microchip Technology Inc.

20-Lead Plastic Shrink Small Outline (SS) - 5.30 mm Body [SSOP]

Note: For the most current package drawings, please see the Microchip Packaging Specification located at http://www.microchip.com/packaging

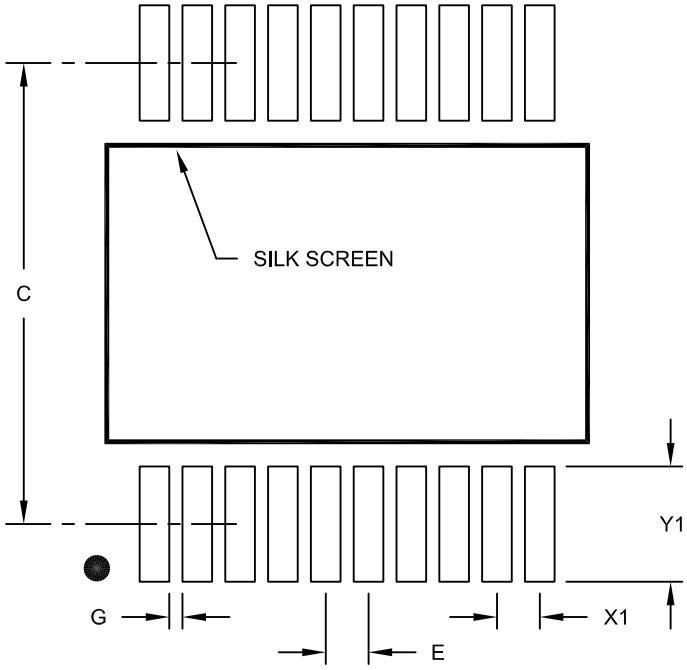

RECOMMENDED LAND PATTERN

Units		MILLIMETERS		
Dimension Limits		MIN	NOM	MAX
Contact Pitch	E	0.65 BSC		
Contact Pad Spacing	C		7.20	
Contact Pad Width (X20)	X1			0.45
Contact Pad Length (X20)	Y1			1.75
Distance Between Pads	G	0.20		

Notes:

1. Dimensioning and tolerancing per ASME Y14.5M

BSC: Basic Dimension. Theoretically exact value shown without tolerances.

Microchip Technology Drawing No. C04-2072A

28-Lead Skinny Plastic Dual In-Line (SP) – 300 mil Body [SPDIP]

Note: For the most current package drawings, please see the Microchip Packaging Specification located at http://www.microchip.com/packaging

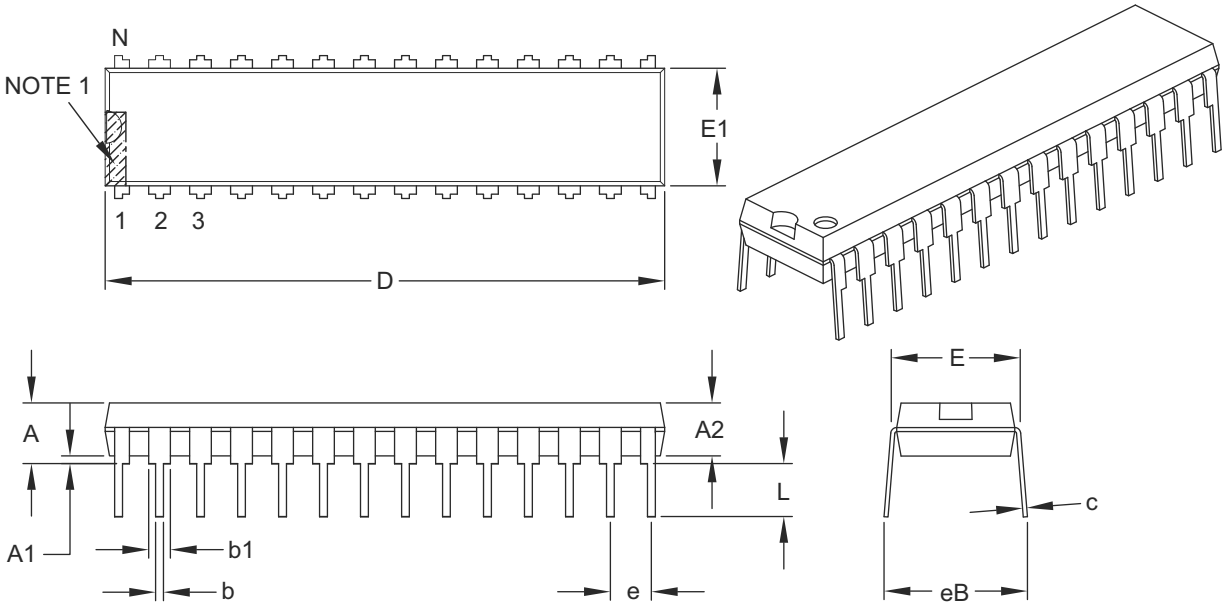

Units		INCHES		
Dimension Limits		MIN	NOM	MAX
Number of Pins	N	28		
Pitch	e	.100 BSC		
Top to Seating Plane	A	–	–	.200
Molded Package Thickness	A2	.120	.135	.150
Base to Seating Plane	A1	.015	–	–
Shoulder to Shoulder Width	E	.290	.310	.335
Molded Package Width	E1	.240	.285	.295
Overall Length	D	1.345	1.365	1.400
Tip to Seating Plane	L	.110	.130	.150
Lead Thickness	c	.008	.010	.015
Upper Lead Width	b1	.040	.050	.070
Lower Lead Width	b	.014	.018	.022
Overall Row Spacing §	eB	–	–	.430

Notes:

1. Pin 1 visual index feature may vary, but must be located within the hatched area.
2. § Significant Characteristic.
3. Dimensions D and E1 do not include mold flash or protrusions. Mold flash or protrusions shall not exceed .010" per side.
4. Dimensioning and tolerancing per ASME Y14.5M.

   BSC: Basic Dimension. Theoretically exact value shown without tolerances.

Microchip Technology Drawing C04-070B

© 2011-2012 Microchip Technology Inc.

28-Lead Plastic Shrink Small Outline (SS) – 5.30 mm Body [SSOP]

Note: For the most current package drawings, please see the Microchip Packaging Specification located at http://www.microchip.com/packaging

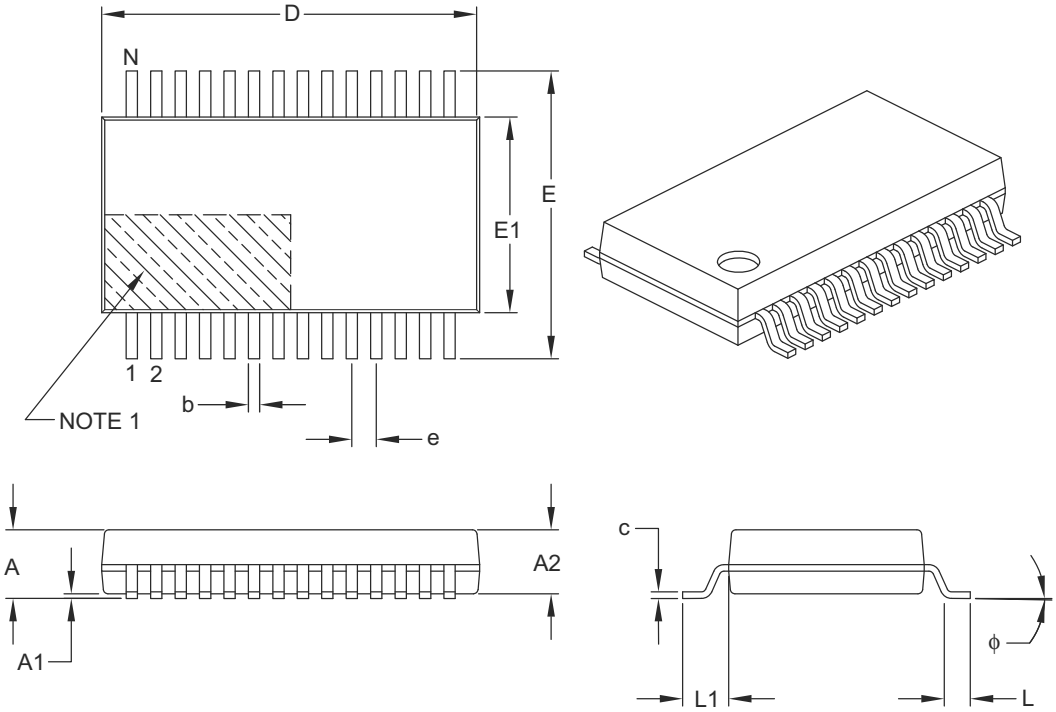

Units		MILLIMETERS		
Dimension Limits		MIN	NOM	MAX
Number of Pins	N	28		
Pitch	e	0.65 BSC		
Overall Height	A	–	–	2.00
Molded Package Thickness	A2	1.65	1.75	1.85
Standoff	A1	0.05	–	–
Overall Width	E	7.40	7.80	8.20
Molded Package Width	E1	5.00	5.30	5.60
Overall Length	D	9.90	10.20	10.50
Foot Length	L	0.55	0.75	0.95
Footprint	L1	1.25 REF		
Lead Thickness	c	0.09	–	0.25
Foot Angle	ϕ	0°	4°	8°
Lead Width	b	0.22	–	0.38

Notes:

1. Pin 1 visual index feature may vary, but must be located within the hatched area.
2. Dimensions D and E1 do not include mold flash or protrusions. Mold flash or protrusions shall not exceed 0.20 mm per side.
3. Dimensioning and tolerancing per ASME Y14.5M.

   BSC: Basic Dimension. Theoretically exact value shown without tolerances.

   REF: Reference Dimension, usually without tolerance, for information purposes only.

Microchip Technology Drawing C04-073B

28-Lead Plastic Shrink Small Outline (SS) - 5.30 mm Body [SSOP]

Note: For the most current package drawings, please see the Microchip Packaging Specification located at http://www.microchip.com/packaging

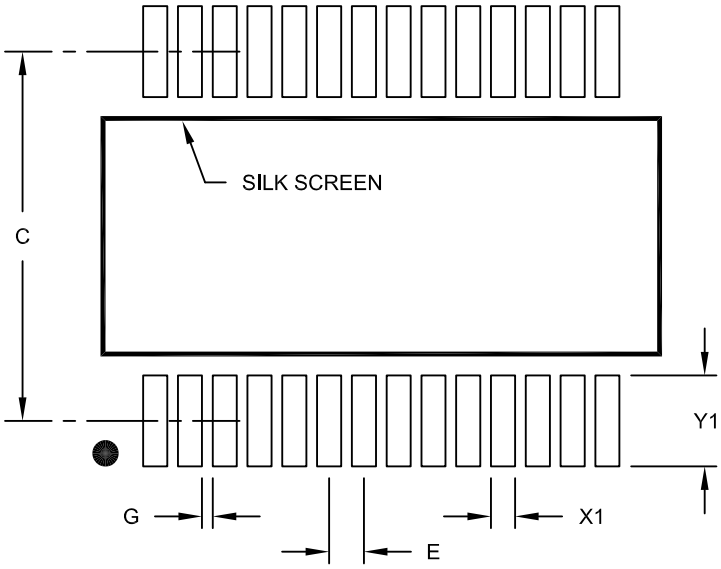

RECOMMENDED LAND PATTERN

Units		MILLIMETERS		
Dimension Limits		MIN	NOM	MAX
Contact Pitch	E	0.65 BSC		
Contact Pad Spacing	C		7.20	
Contact Pad Width (X28)	X1			0.45
Contact Pad Length (X28)	Y1			1.75
Distance Between Pads	G	0.20		

Notes:

1. Dimensioning and tolerancing per ASME Y14.5M
   BSC: Basic Dimension. Theoretically exact value shown without tolerances.

Microchip Technology Drawing No. C04-2073A

© 2011-2012 Microchip Technology Inc.

28-Lead Plastic Small Outline (SO) - Wide, 7.50 mm Body [SOIC]

Note: For the most current package drawings, please see the Microchip Packaging Specification located at http://www.microchip.com/packaging

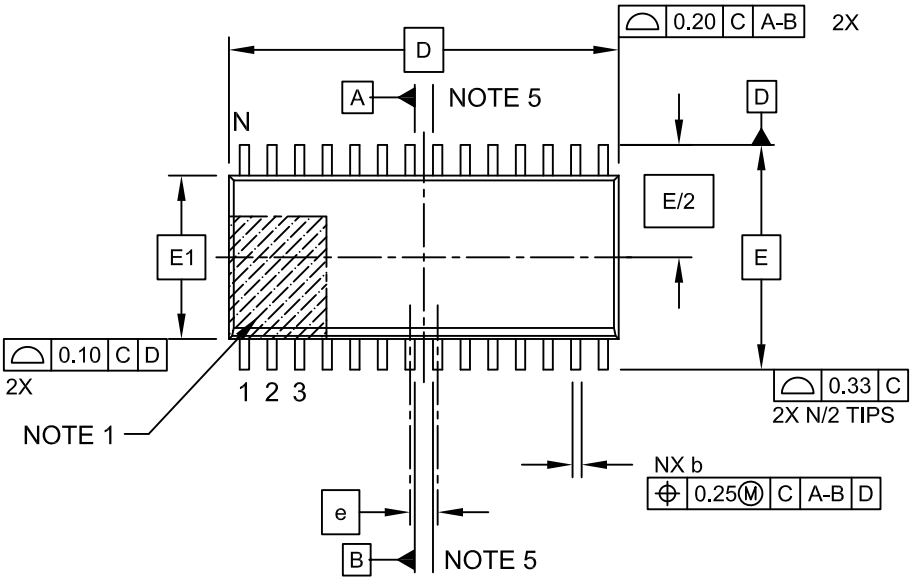

TOP VIEW

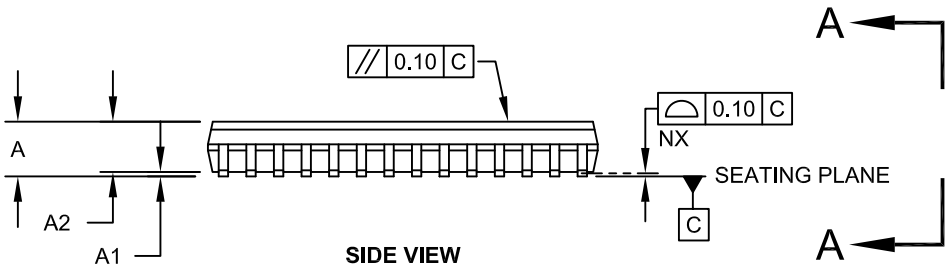

SIDE VIEW

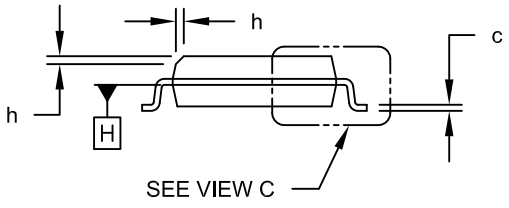

VIEW A-A

Microchip Technology Drawing C04-052C Sheet 1 of 2

28-Lead Plastic Small Outline (SO) - Wide, 7.50 mm Body [SOIC]

Note: For the most current package drawings, please see the Microchip Packaging Specification located at http://www.microchip.com/packaging

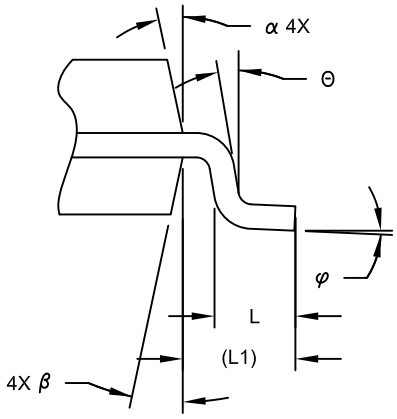

VIEW C

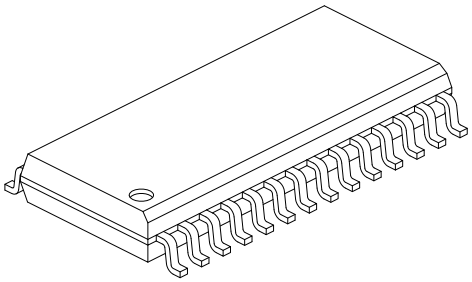

Units		MILLIMETERS		
Dimension Limits		MIN	NOM	MAX
Number of Pins	N	28		
Pitch	e	1.27 BSC		
Overall Height	A	-	-	2.65
Molded Package Thickness	A2	2.05	-	-
Standoff §	A1	0.10	-	0.30
Overall Width	E	10.30 BSC		
Molded Package Width	E1	7.50 BSC		
Overall Length	D	17.90 BSC		
Chamfer (Optional)	h	0.25	-	0.75
Foot Length	L	0.40	-	1.27
Footprint	L1	1.40 REF		
Lead Angle	Θ	0°	-	-
Foot Angle	φ	0°	-	8°
Lead Thickness	c	0.18	-	0.33
Lead Width	b	0.31	-	0.51
Mold Draft Angle Top	α	5°	-	15°
Mold Draft Angle Bottom	β	5°	-	15°

Notes:

1. Pin 1 visual index feature may vary, but must be located within the hatched area.
2. § Significant Characteristic
3. Dimension D does not include mold flash, protrusions or gate burrs, which shall not exceed 0.15 mm per end. Dimension E1 does not include interlead flash or protrusion, which shall not exceed 0.25 mm per side.
4. Dimensioning and tolerancing per ASME Y14.5M
   BSC: Basic Dimension. Theoretically exact value shown without tolerances.
   REF: Reference Dimension, usually without tolerance, for information purposes only.
5. Datums A & B to be determined at Datum H.

Microchip Technology Drawing C04-052C Sheet 2 of 2

© 2011-2012 Microchip Technology Inc.

28-Lead Plastic Small Outline (SO) - Wide, 7.50 mm Body [SOIC]

Note: For the most current package drawings, please see the Microchip Packaging Specification located at http://www.microchip.com/packaging

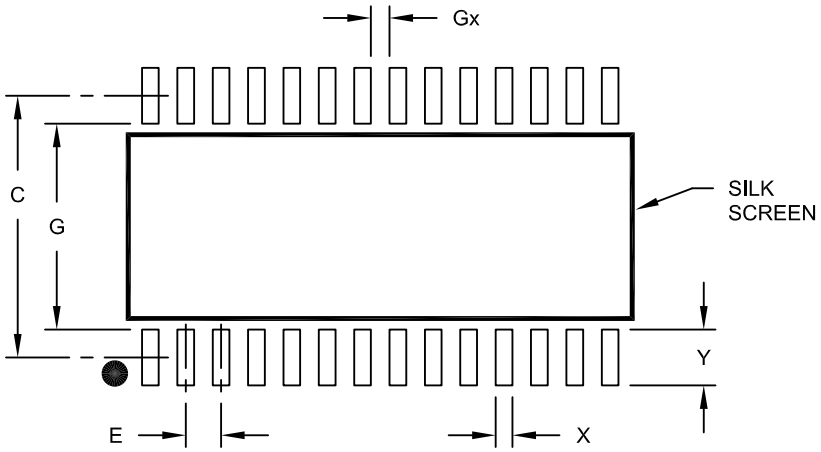

RECOMMENDED LAND PATTERN

Units		MILLIMETERS		
Dimension Limits		MIN	NOM	MAX
Contact Pitch	E	1.27 BSC		
Contact Pad Spacing	C		9.40	
Contact Pad Width (X28)	X			0.60
Contact Pad Length (X28)	Y			2.00
Distance Between Pads	Gx	0.67		
Distance Between Pads	G	7.40		

Notes:

1. Dimensioning and tolerancing per ASME Y14.5M
   BSC: Basic Dimension. Theoretically exact value shown without tolerances.

Microchip Technology Drawing No. C04-2052A

28-Lead Plastic Quad Flat, No Lead Package (ML) - 6x6 mm Body [QFN] With 0.55 mm Terminal Length

Note:	For the most current package drawings, please see the Microchip Packaging Specification located at http://www.microchip.com/packaging

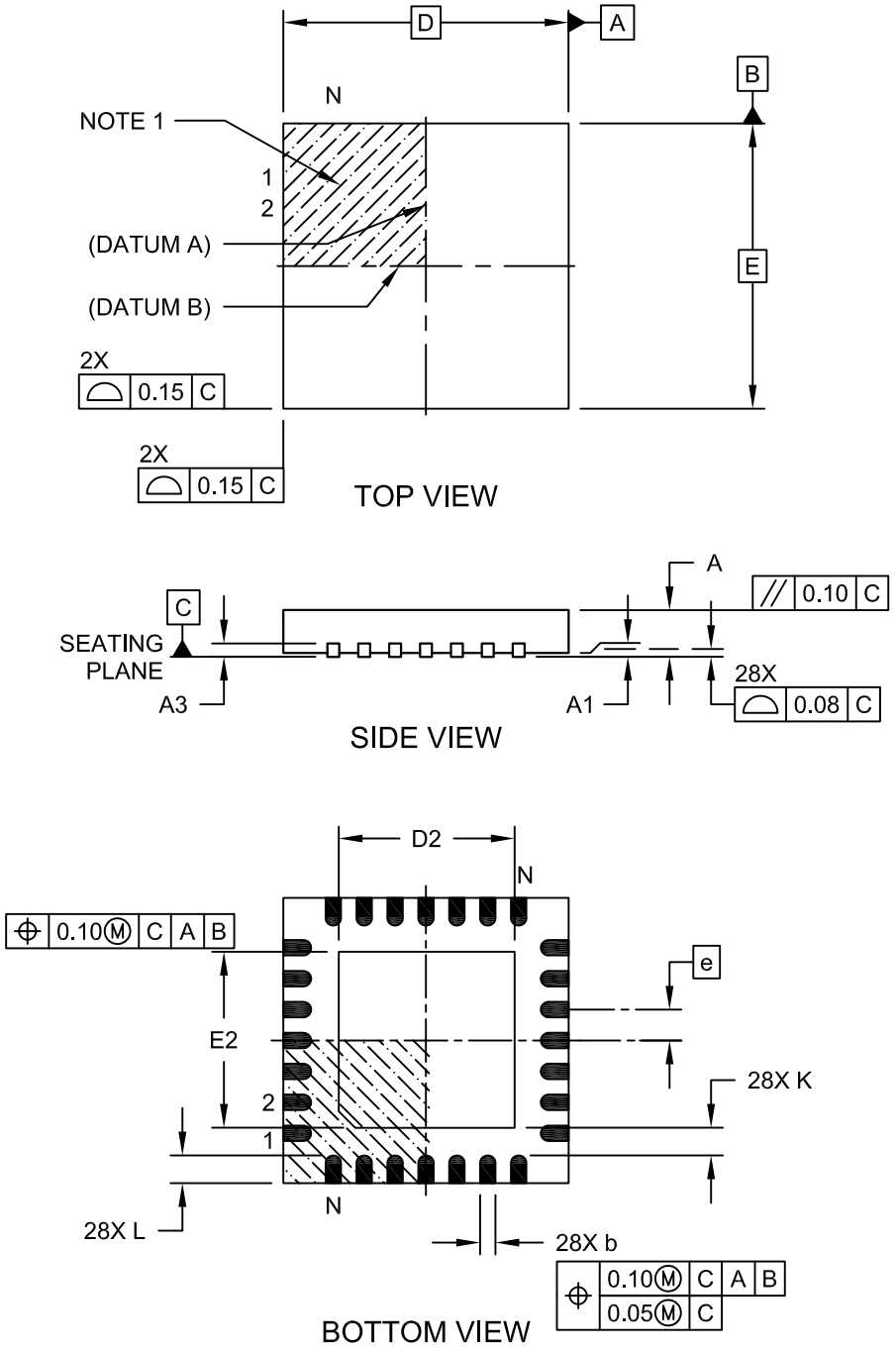

Microchip Technology Drawing C04-105C Sheet 1 of 2

© 2011-2012 Microchip Technology Inc.

28-Lead Plastic Quad Flat, No Lead Package (ML) - 6x6 mm Body [QFN] With 0.55 mm Terminal Length

Note: For the most current package drawings, please see the Microchip Packaging Specification located at http://www.microchip.com/packaging

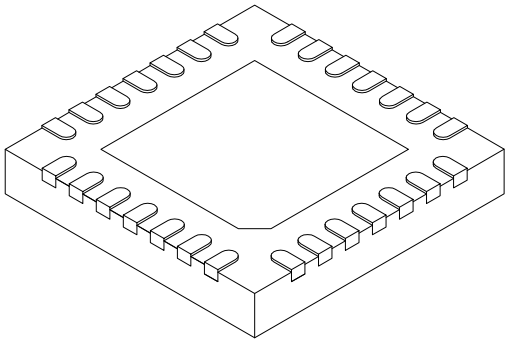

	Units	MILLIMETERS		
Dimension	Limits	MIN	NOM	MAX
Number of Pins	N	28		
Pitch	e	0.65 BSC		
Overall Height	A	0.80	0.90	1.00
Standoff	A1	0.00	0.02	0.05
Terminal Thickness	A3	0.20 REF		
Overall Width	E	6.00 BSC		
Exposed Pad Width	E2	3.65	3.70	4.20
Overall Length	D	6.00 BSC		
Exposed Pad Length	D2	3.65	3.70	4.20
Terminal Width	b	0.23	0.30	0.35
Terminal Length	L	0.50	0.55	0.70
Terminal-to-Exposed Pad	K	0.20	-	-

Notes:

1. Pin 1 visual index feature may vary, but must be located within the hatched area.
2. Package is saw singulated
3. Dimensioning and tolerancing per ASME Y14.5M.
   BSC: Basic Dimension. Theoretically exact value shown without tolerances.
   REF: Reference Dimension, usually without tolerance, for information purposes only.

Microchip Technology Drawing C04-105C Sheet 2 of 2

28-Lead Plastic Quad Flat, No Lead Package (ML) – 6x6 mm Body [QFN] with 0.55 mm Contact Length

Note: For the most current package drawings, please see the Microchip Packaging Specification located at http://www.microchip.com/packaging

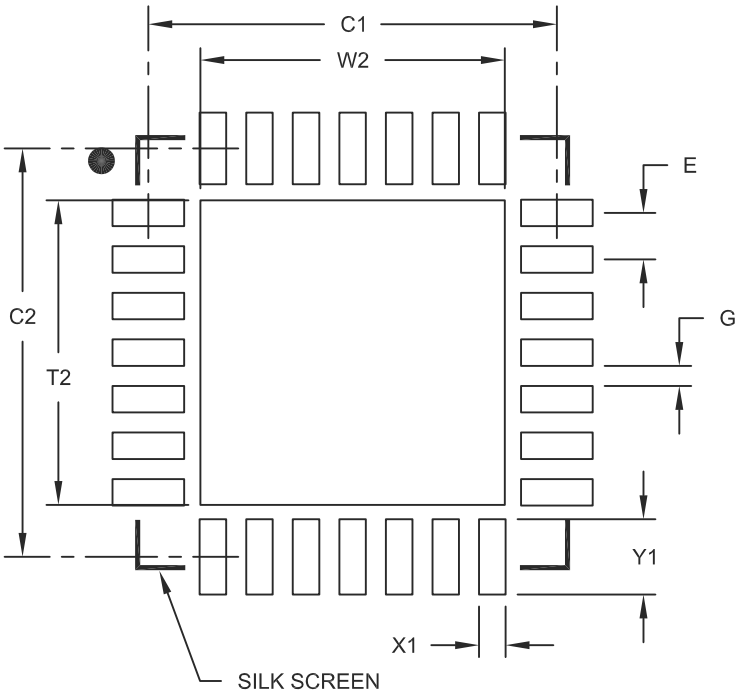

RECOMMENDED LAND PATTERN

Units		MILLIMETERS		
Dimension Limits		MIN	NOM	MAX
Contact Pitch	E		0.65 BSC	
Optional Center Pad Width	W2			4.25
Optional Center Pad Length	T2			4.25
Contact Pad Spacing	C1		5.70	
Contact Pad Spacing	C2		5.70	
Contact Pad Width (X28)	X1			0.37
Contact Pad Length (X28)	Y1			1.00
Distance Between Pads	G	0.20		

Notes:

1. Dimensioning and tolerancing per ASME Y14.5M
   BSC: Basic Dimension. Theoretically exact value shown without tolerances.

Microchip Technology Drawing No. C04-2105A

© 2011-2012 Microchip Technology Inc.

36-Terminal Very Thin Thermal Leadless Array Package (TL) – 5x5x0.9 mm Body with Exposed Pad [VTLA]

Note: For the most current package drawings, please see the Microchip Packaging Specification located at http://www.microchip.com/packaging

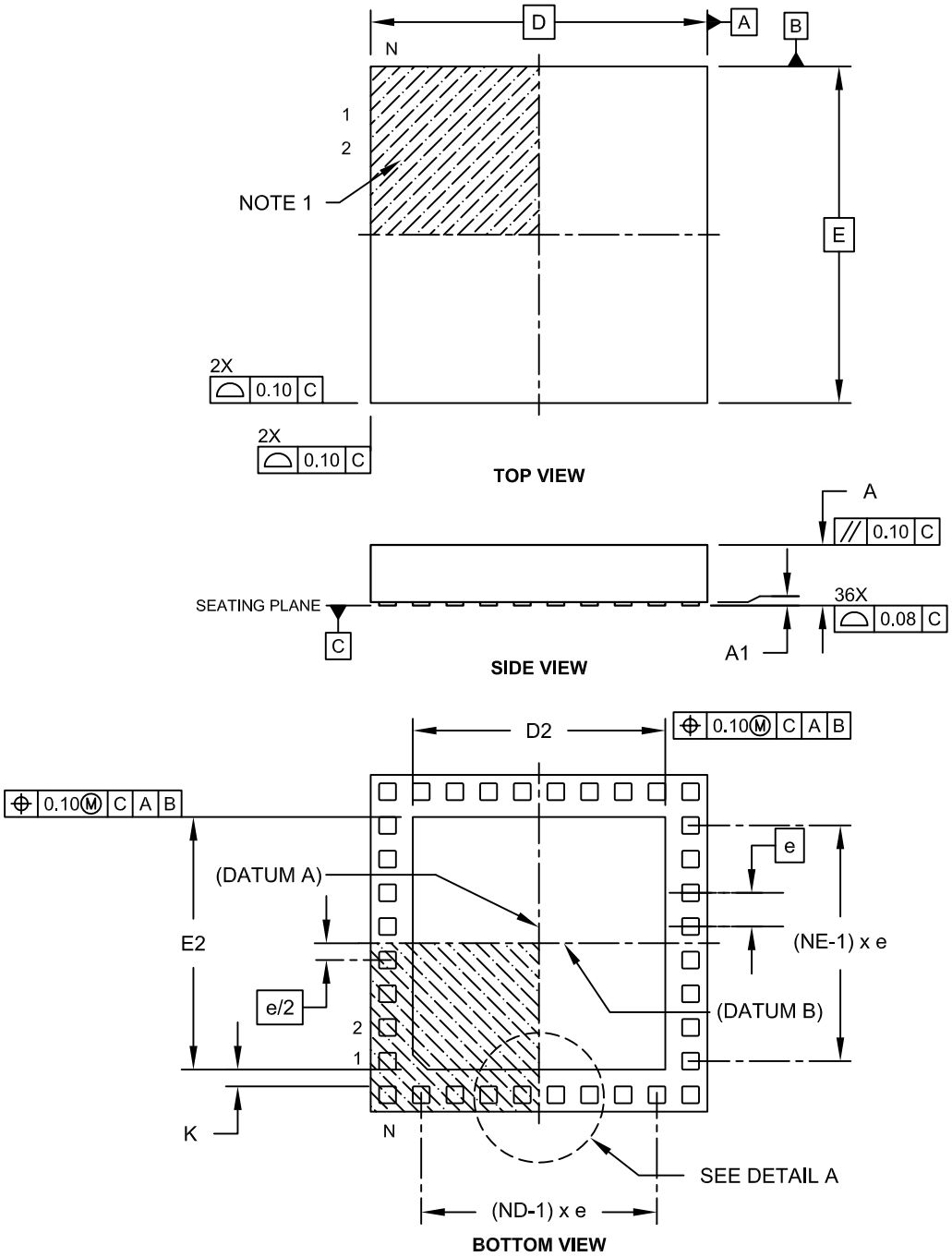

Microchip Technology Drawing C04-187C Sheet 1 of 2

36-Terminal Very Thin Thermal Leadless Array Package (TL) – 5x5x0.9 mm Body with Exposed Pad [VTLA]

Note: For the most current package drawings, please see the Microchip Packaging Specification located at http://www.microchip.com/packaging

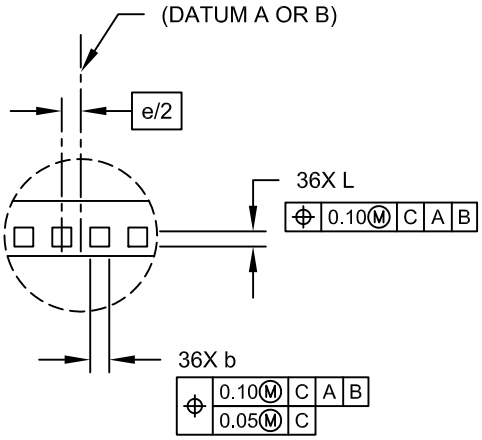

DETAIL A

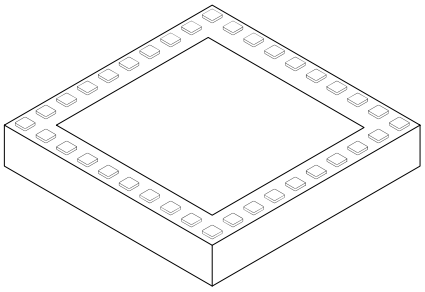

	Units	MILLIMETERS		
Dimension	Limits	MIN	NOM	MAX
Number of Pins	N		36	
Number of Pins per Side	ND		10	
Number of Pins per Side	NE		8	
Pitch	e		0.50 BSC	
Overall Height	A	0.80	0.90	1.00
Standoff	A1	0.025	-	0.075
Overall Width	E		5.00 BSC	
Exposed Pad Width	E2	3.60	3.75	3.90
Overall Length	D		5.00 BSC	
Exposed Pad Length	D2	3.60	3.75	3.90
Contact Width	b	0.20	0.25	0.30
Contact Length	L	0.20	0.25	0.30
Contact-to-Exposed Pad	K	0.20	-	-

Notes:

1. Pin 1 visual index feature may vary, but must be located within the hatched area.
2. Package is saw singulated.
3. Dimensioning and tolerancing per ASME Y14.5M.
   BSC: Basic Dimension. Theoretically exact value shown without tolerances.
   REF: Reference Dimension, usually without tolerance, for information purposes only.

Microchip Technology Drawing C04-187C Sheet 2 of 2

© 2011-2012 Microchip Technology Inc.

44-Lead Plastic Quad Flat, No Lead Package (ML) – 8x8 mm Body [QFN]

Note: For the most current package drawings, please see the Microchip Packaging Specification located at http://www.microchip.com/packaging

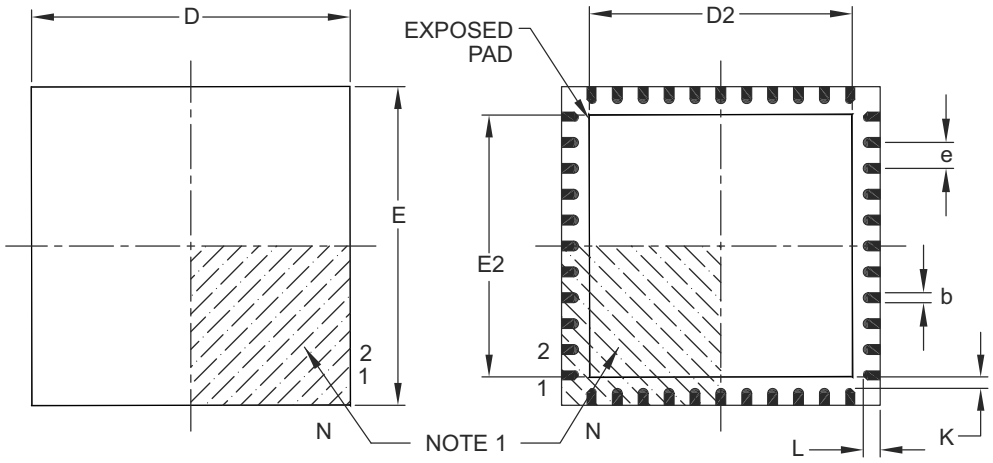

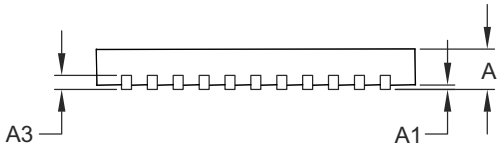

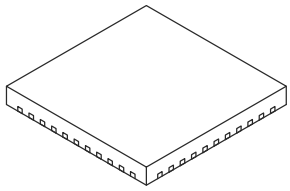

Units		MILLIMETERS		
Dimension Limits		MIN	NOM	MAX
Number of Pins	N	44		
Pitch	e	0.65 BSC		
Overall Height	A	0.80	0.90	1.00
Standoff	A1	0.00	0.02	0.05
Contact Thickness	A3	0.20 REF		
Overall Width	E	8.00 BSC		
Exposed Pad Width	E2	6.30	6.45	6.80
Overall Length	D	8.00 BSC		
Exposed Pad Length	D2	6.30	6.45	6.80
Contact Width	b	0.25	0.30	0.38
Contact Length	L	0.30	0.40	0.50
Contact-to-Exposed Pad	K	0.20	–	–

Notes:

1. Pin 1 visual index feature may vary, but must be located within the hatched area.
2. Package is saw singulated.
3. Dimensioning and tolerancing per ASME Y14.5M.
   BSC: Basic Dimension. Theoretically exact value shown without tolerances.
   REF: Reference Dimension, usually without tolerance, for information purposes only.

Microchip Technology Drawing C04-103B

44-Lead Plastic Quad Flat, No Lead Package (ML) – 8x8 mm Body [QFN]

Note: For the most current package drawings, please see the Microchip Packaging Specification located at http://www.microchip.com/packaging

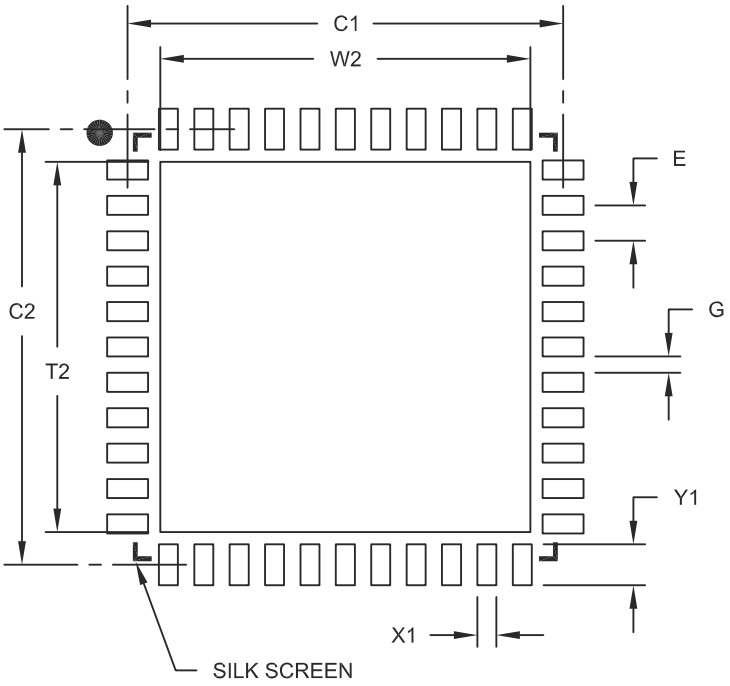

RECOMMENDED LAND PATTERN

Units		MILLIMETERS		
Dimension Limits		MIN	NOM	MAX
Contact Pitch	E		0.65 BSC	
Optional Center Pad Width	W2			6.80
Optional Center Pad Length	T2			6.80
Contact Pad Spacing	C1		8.00	
Contact Pad Spacing	C2		8.00	
Contact Pad Width (X44)	X1			0.35
Contact Pad Length (X44)	Y1			0.80
Distance Between Pads	G	0.25		

Notes:

1. Dimensioning and tolerancing per ASME Y14.5M

   BSC: Basic Dimension. Theoretically exact value shown without tolerances.

Microchip Technology Drawing No. C04-2103A

© 2011-2012 Microchip Technology Inc.

44-Lead Plastic Thin Quad Flatpack (PT) – 10x10x1 mm Body, 2.00 mm [TQFP]

Note: For the most current package drawings, please see the Microchip Packaging Specification located at http://www.microchip.com/packaging

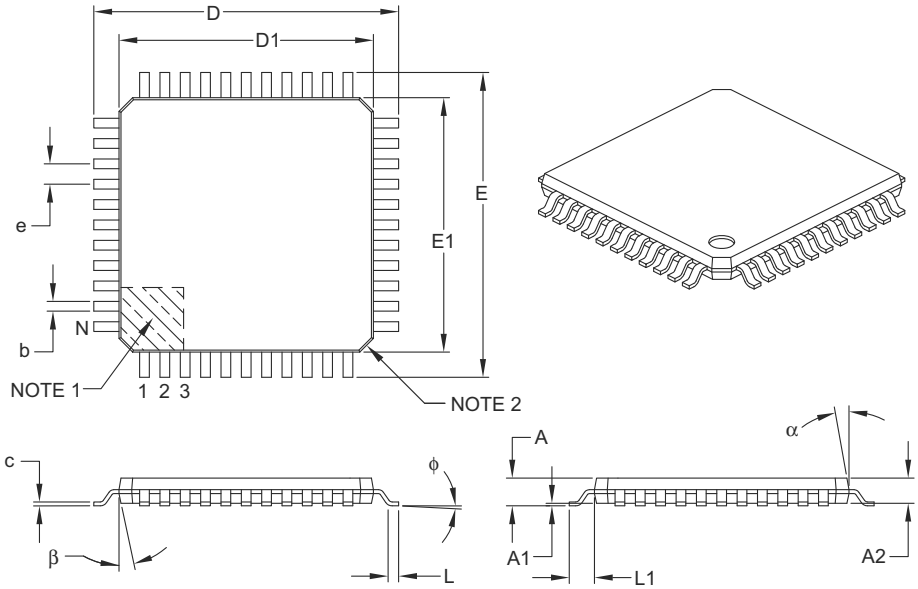

Units		MILLIMETERS		
Dimension Limits		MIN	NOM	MAX
Number of Leads	N	44		
Lead Pitch	e	0.80 BSC		
Overall Height	A	–	–	1.20
Molded Package Thickness	A2	0.95	1.00	1.05
Standoff	A1	0.05	–	0.15
Foot Length	L	0.45	0.60	0.75
Footprint	L1	1.00 REF		
Foot Angle	ϕ	0°	3.5°	7°
Overall Width	E	12.00 BSC		
Overall Length	D	12.00 BSC		
Molded Package Width	E1	10.00 BSC		
Molded Package Length	D1	10.00 BSC		
Lead Thickness	c	0.09	–	0.20
Lead Width	b	0.30	0.37	0.45
Mold Draft Angle Top	α	11°	12°	13°
Mold Draft Angle Bottom	β	11°	12°	13°

Notes:

1. Pin 1 visual index feature may vary, but must be located within the hatched area.
2. Chamfers at corners are optional; size may vary.
3. Dimensions D1 and E1 do not include mold flash or protrusions. Mold flash or protrusions shall not exceed 0.25 mm per side.
4. Dimensioning and tolerancing per ASME Y14.5M.

   BSC: Basic Dimension. Theoretically exact value shown without tolerances.

   REF: Reference Dimension, usually without tolerance, for information purposes only.

Microchip Technology Drawing C04-076B

44-Lead Plastic Thin Quad Flatpack (PT) 10X10X1 mm Body, 2.00 mm Footprint [TQFP]

Note: For the most current package drawings, please see the Microchip Packaging Specification located at http://www.microchip.com/packaging

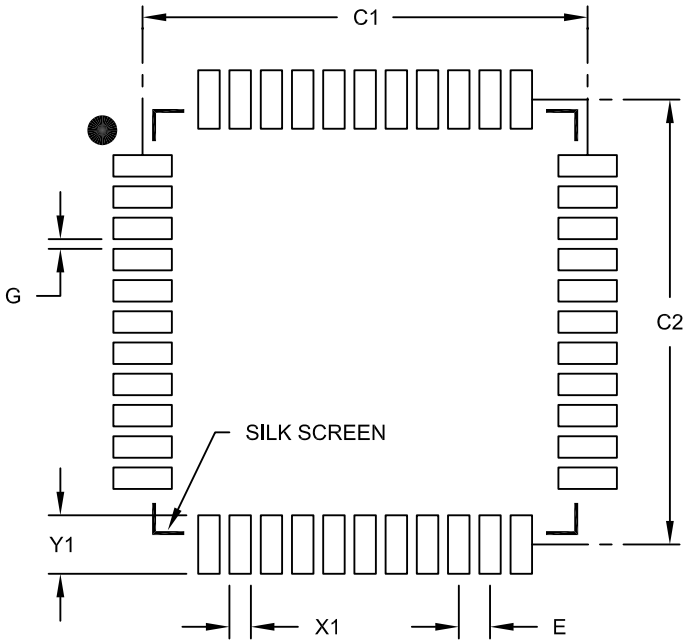

RECOMMENDED LAND PATTERN

Units		MILLIMETERS		
Dimension Limits		MIN	NOM	MAX
Contact Pitch	E		0.80 BSC	
Contact Pad Spacing	C1		11.40	
Contact Pad Spacing	C2		11.40	
Contact Pad Width (X44)	X1			0.55
Contact Pad Length (X44)	Y1			1.50
Distance Between Pads	G	0.25		

Notes:

1. Dimensioning and tolerancing per ASME Y14.5M

BSC: Basic Dimension. Theoretically exact value shown without tolerances.

Microchip Technology Drawing No. C04-2076B

© 2011-2012 Microchip Technology Inc.

44-Terminal Very Thin Leadless Array Package (TL) – 6x6x0.9 mm Body With Exposed Pad [VTLA]

Note: For the most current package drawings, please see the Microchip Packaging Specification located at http://www.microchip.com/packaging

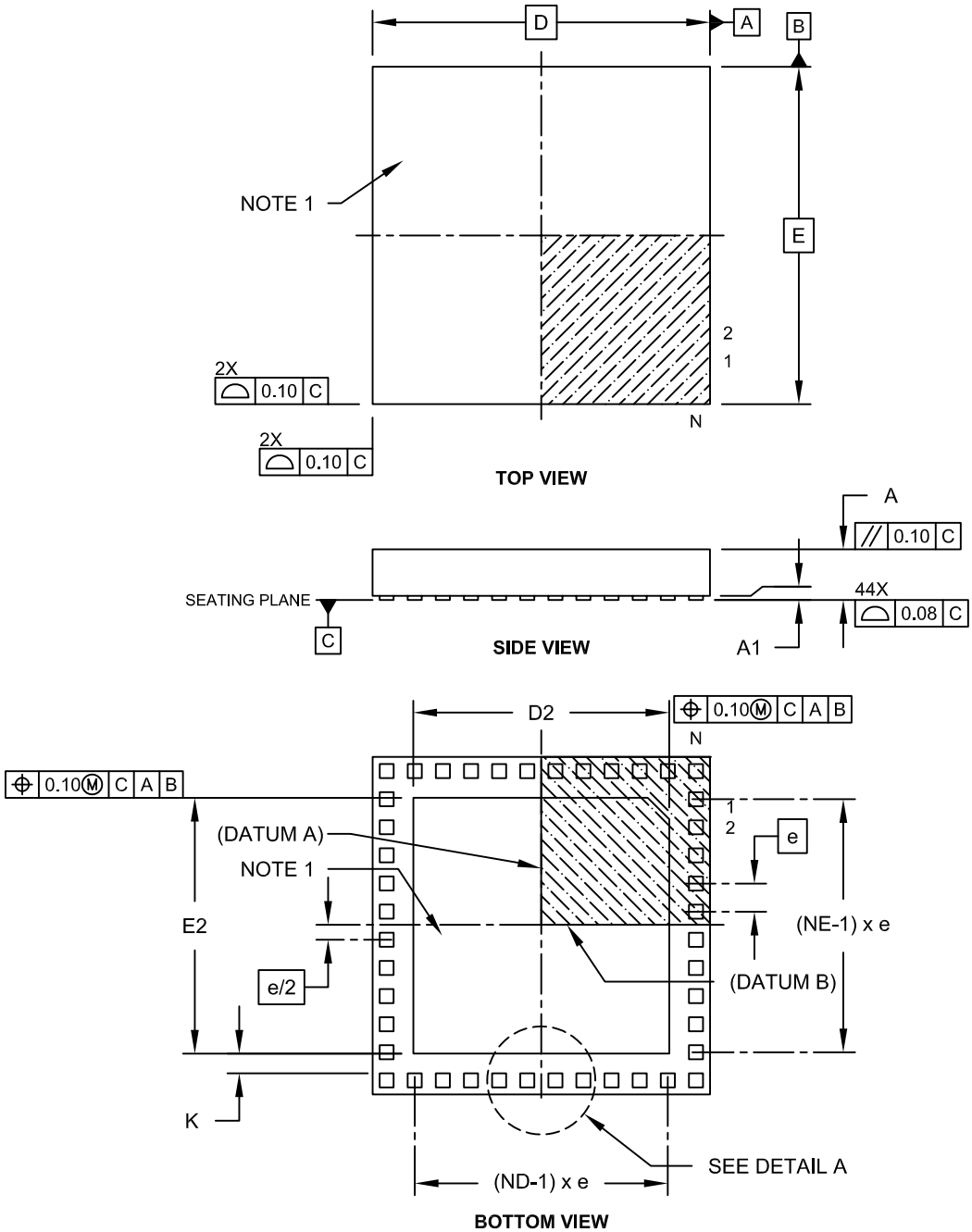

Microchip Technology Drawing C04-157C Sheet 1 of 2

44-Terminal Very Thin Leadless Array Package (TL) – 6x6x0.9 mm Body With Exposed Pad [VTLA]

Note: For the most current package drawings, please see the Microchip Packaging Specification located at http://www.microchip.com/packaging

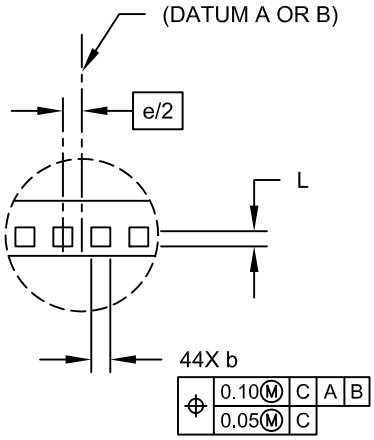

DETAIL A

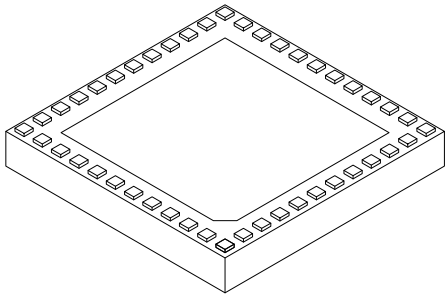

Units		MILLIMETERS		
Dimension	Limits	MIN	NOM	MAX
Number of Pins	N		44	
Number of Pins per Side	ND		12	
Number of Pins per Side	NE		10	
Pitch	e		0.50 BSC	
Overall Height	A	0.80	0.90	1.00
Standoff	A1	0.025	-	0.075
Overall Width	E		6.00 BSC	
Exposed Pad Width	E2	4.40	4.55	4.70
Overall Length	D		6.00 BSC	
Exposed Pad Length	D2	4.40	4.55	4.70
Contact Width	b	0.20	0.25	0.30
Contact Length	L	0.20	0.25	0.30
Contact-to-Exposed Pad	K	0.20	-	-

Notes:

1. Pin 1 visual index feature may vary, but must be located within the hatched area.
2. Package is saw singulated.
3. Dimensioning and tolerancing per ASME Y14.5M.
   BSC: Basic Dimension. Theoretically exact value shown without tolerances.
   REF: Reference Dimension, usually without tolerance, for information purposes only.

Microchip Technology Drawing C04-157C Sheet 2 of 2

© 2011-2012 Microchip Technology Inc.

APPENDIX A: REVISION HISTORY

Revision A (January 2011)

This is the initial released version of the document.

Revision B (February 2011)

All major changes are referenced by their respective section in Table A-1.

In addition, minor text and formatting changes were incorporated throughout the document.

TABLE A-1: MAJOR SECTION UPDATES

Section Name	Update Description
High-Performance, Ultra Low Cost 16-bit Digital Signal Controllers	Pin diagram updates (see **"Pin Diagrams"**): • 20-pin PDIP/SOIC/SSOP (dsPIC33FJ16MC101): Removed the $\overline{\text{FLTB1}}$ pin from pin 10 • 28-pin SPDIP/SOIC/SSOP (dsPIC33FJ16MC102): Relocated the $\overline{\text{FLTB1}}$ pin from pin 12 to pin 14; relocated the $\overline{\text{FLTA1}}$ pin from pin 16 to pin 15 • 28-pin QFN (dsPIC33FJ16MC102): Relocated the $\overline{\text{FLTA1}}$ pin from pin 13 to pin 12; relocated the $\overline{\text{FLTB1}}$ pin from pin 9 to pin 11 • 36-pin TLA (dsPIC33FJ16MC102): Relocated the $\overline{\text{FLTA1}}$ pin from pin 17 to pin 16; relocated the $\overline{\text{FLTB1}}$ pin from pin 10 to pin 15
Section 1.0 "Device Overview"	Added Notes 1, 2, and 3 regarding the $\overline{\text{FLTA1}}$ and $\overline{\text{FLTB1}}$ pins to the Pinout I/O Descriptions (see Table 1-1). Added **Section "".**
Section 4.0 "Memory Organization"	Updated All Resets value for PxFLTACON and PxFLTABCON to the 6-Output PWM1 Register Map (see Table 4-9). Added Note 1 to the PMD Register Map (see Table 4-29).
Section 6.0 "Resets"	Removed Reset timing sequence information from **Section 6.2 "System Reset"**, as this information is provided in Figure 6-2.
Section 15.0 "Motor Control PWM Module"	Added Note 2 and Note 3 regarding the $\overline{\text{FLTA1}}$ and $\overline{\text{FLTB1}}$ pins to the 6-channel PWM Module Block Diagram (see Figure 15-1). Added **Section 15.2 "PWM Faults"** and **Section 15.3 "Write-protected Registers"**. Added Note 2 and Note 3 regarding the $\overline{\text{FLTA1}}$ and $\overline{\text{FLTB1}}$ pins to the note boxes located below the PxFLTACON and PxFLTBCON registers (see Register 15-9 and Register 15-10).
Section 17.0 "Inter-Integrated Circuit™ (I^2C™)"	Updated the descriptions for the conditional If STREN = `1` and If STREN = `0` statements for the SCLREL bit in the I2Cx Control Register (see Register 17-1).
Section 23.0 "Special Features"	Added the RTSP Effect column to the dsPIC33F Configuration Bits Description (see Table 23-3).
Section 26.0 "Electrical Characteristics"	Added Parameters 300 and D305 (see Table 26-42 and Table 26-43).
Section 27.0 "Packaging Information"	Modified the pending TLA packaging page.

Revision C (June 2011)

This revision includes the following global update:

- All JTAG references have been removed

All other major changes are referenced by their respective section in Table A-2.

In addition, minor text and formatting changes were incorporated throughout the document.

TABLE A-2: MAJOR SECTION UPDATES

Section Name	Update Description
High-Performance, Ultra Low Cost 16-bit Digital Signal Controllers	The TMS, TDI, TDO, and TCK pin names were removed from these pin diagrams: • 28-pin SPDIP/SOIC/SSOP • 28-pin QFN • 36-pin TLA
Section 1.0 “Device Overview”	Updated the Buffer Type to Digital for the CTED1 and CTED2 pins (see Table 1-1).
Section 4.0 “Memory Organization”	Updated the SFR Address for IC2CON, IC3BUF, and IC3CON in the Input Capture Register Map (see Table 4-7). Added the VREGS bit to the RCON register in the System Control Register Map (see Table 4-27).
Section 6.0 “Resets”	Added the VREGS bit to the RCON register (see Register 6-1).
Section 8.0 “Oscillator Configuration”	Updated the definition for COSC<2:0> = `001` and NOSC<2:0> = `001` in the OSCCON register (see Register 8-1).
Section 15.0 “Motor Control PWM Module”	Updated the title for Example 15-1 to include a reference to the Assembly language. Added Example 15-2, which provides a C code version of the write-protected register unlock and Fault clearing sequence.
Section 19.0 “10-bit Analog-to-Digital Converter (ADC)”	Updated the CH0 section and added Note 2 in both ADC block diagrams (see Figure 19-1 and Figure 19-2). Updated the multiplexer values in the ADC Conversion Clock Period Block Diagram (see Figure 19-3. Added the `01110` bit definitions and updated the `01101` bit definitions for the CH0SB<4:0> and CH0SA<4:0> bits in the AD1CHS0 register (see Register 19-5).
Section 22.0 “Charge Time Measurement Unit (CTMU)”	Removed Section 22.1 “Measuring Capacitance”, Section 22.2 “Measuring Time”, and Section 22.3 “Pulse Generation and Delay” Updated the key features. Added the CTMU Block Diagram (see Figure 22-1). Updated the ITRIM<5:0> bit definitions and added Note 1 to the CTMU Current Control register (see Register 22-3).

© 2011-2012 Microchip Technology Inc.

TABLE A-2: MAJOR SECTION UPDATES (CONTINUED)

Section Name	Update Description
Section 23.0 "Special Features"	Updated bits 5 and 4 of FPOR, modified Note 2, and removed Note 3 from the Configuration Shadow Register Map (see Table 23-1). Updated bit 14 of CONFIG1 and removed Note 5 from the Configuration Flash Words (see Table 23-2). Updated the PLLKEN Configuration bit description (see Table 23-3). Added Note 3 to Connections for the On-Chip Voltage Regulator (see Figure 23-1).
Section 26.0 "Electrical Characteristics"	Updated the Standard Operating Conditions to: 3.0V to 3.6V in all tables. Removed the Voltage on V_{CAP} with respect to V_{SS} entry in Absolute Maximum Ratings(1). Updated the V_{DD} Range (in Volts) in Operating MIPS vs. Voltage (see Table 26-1). Removed Parameter DC18 and updated the minimum value for Parameter DC 10 in the DC Temperature and Voltage Specifications (see Table 26-4). Updated the Characteristic definition and the Typical value for Parameter BO10 in Electrical Characteristics: BOR (see Table 26-5). Updated Note 2 in the DC Characteristics: Operating Current (I_{DD}) (see Table 26-6). Updated Note 2 in the DC Characteristics: Idle Current (I_{IDLE}) (see Table 26-7). Updated Note 2 and Parameters DC60C and DC61a-DC61d in the DC Characteristics: Power-Down Current (I_{PD}) (see Table 26-8). Updated Note 2 in the DC Characteristics: Doze Current (I_{DOZE}) (see Table 26-9). Added Note 1 to the Internal Voltage Regulator Specifications (see Table 26-13). Updated the Minimum and Maximum values for Parameter F20a and the Typical value for Parameter F20b in AC Characteristics: Internal Fast RC (FRC) Accuracy (see Table 26-18). Updated the Minimum, Typical, and Maximum values for Parameter F21a and F21b in Internal Low-Power RC (LPRC) Accuracy (see Table 26-19). Updated the Minimum, Typical, and Maximum values for Parameter D305 in the Comparator Module Specifications (see Table 26-43). Added Parameters CTMUFV1 and CTMUFV2 and updated Note 1 and the Conditions for all parameters in the CTMU Current Source Specifications (see Table 26-46). Added Forward Voltage Versus Temperature (see Figure 26-25).

Revision D (April 2012)

This revision includes updates in support of the following new devices:

- dsPIC33FJ32GP101
- dsPIC33FJ32GP102
- dsPIC33FJ32GP104
- dsPIC33FJ32MC101
- dsPIC33FJ32MC102
- dsPIC33FJ32MC104

Also, where applicable, new sections were added to peripheral chapters that provide information and links to the related resources, as well as helpful tips. For examples, see **Section 18.1 "UART Helpful Tips"** and **Section 18.2 "UART Resources"**.

This revision includes text and formatting changes that were incorporated throughout the document.

All other major changes are referenced by their respective section in Table A-3.

TABLE A-3: MAJOR SECTION UPDATES

Section Name	Update Description
"16-Bit Digital Signal Controllers (up to 32-Kbyte Flash and 2-Kbyte SRAM)"	The content on the first page of this section was extensively reworked to provide the reader with the key features and functionality of this device family in an "at-a-glance" format. **TABLE 2: "dsPIC33FJ32(GP/MC)101/102/104 Device Features"** was added, which provides a feature overview of the new devices. All pin diagrams were updated (see **"Pin Diagrams"**).
Section 1.0 "Device Overview"	Updated the notes in the device family block diagram (see Figure 1-1). Updated the following pinout I/O descriptions (Table 1-1): • ANx • CNx • RAx • RCx • CVREFIN (formerly CVREF) Relocated **1.1 "Referenced Sources"** to the previous chapter (see **"Referenced Sources"**).
Section 2.0 "Guidelines for Getting Started with 16-bit Digital Signal Controllers"	Updated the Recommended Minimum Connection diagram (see Figure 2-1).
Section 4.0 "Memory Organization"	Updated the existing Program Memory Map (see Figure 4-1) and added the Program Memory Map for dsPIC33FJ16(GP/MC)101/102 Devices (see Figure 4-1). Updated the existing Data Memory Map (see Figure 4-4) and added the Data Memory Map for dsPIC33FJ32(GP/MC)101/102/104 Devices with 2-Kbyte RAM (see Figure 4-5). The following Special Function Register maps were updated or added: • TABLE 4-5: Change Notification Register Map for dsPIC33FJ32(GP/MC)104 Devices • TABLE 4-6: Interrupt Controller Register Map • TABLE 4-8: Timers Register Map for dsPIC33FJ32(GP/MC)10X Devices • TABLE 4-15: ADC1 Register Map for dsPIC33FJXX(GP/MC)101 Devices • TABLE 4-17: ADC1 Register Map for dsPIC33FJ32(GP/MC)104 Devices • TABLE 4-22: Peripheral Pin Select Input Register Map • TABLE 4-26: Peripheral Pin Select Output Register Map for dsPIC33FJ32(GP/MC)104 Devices • TABLE 4-28: PORTA Register Map for dsPIC33FJ32(GP/MC)101/102 Devices • TABLE 4-29: PORTA Register Map for dsPIC33FJ32(GP/MC)104 Devices • TABLE 4-36: PORTC Register Map for dsPIC33FJ32(GP/MC)104 Devices • TABLE 4-39: PMD Register Map

© 2011-2012 Microchip Technology Inc.

TABLE A-3: MAJOR SECTION UPDATES (CONTINUED)

Section Name	Update Description
Section 7.0 "Interrupt Controller"	Updated the Interrupt Vectors (see Table 7-1). The following registers were updated or added: • Register 7-5: IFS0: Interrupt Flag Status Register 0 • Register 7-11: IEC1: Interrupt Enable Control Register 1 • Register 7-21: IPC6: Interrupt Priority Control Register 6
Section 9.0 "Power-Saving Features"	Updated 9.5 PMD Control Registers.
Section 10.0 "I/O Ports"	Updated TABLE 10-1: Selectable Input Sources (Maps Input to Function)(1). Updated TABLE 10-2: Output Selection for Remappable Pin (RPn) The following registers were updated or added: • Register 10-4: RPINR4: Peripheral Pin Select Input Register 4 • Register 10-6: RPINR8: Peripheral Pin Select Input Register 8 • Register 10-19: RPOR8: Peripheral Pin Select Output Register 8 • Register 10-20: RPOR9: Peripheral Pin Select Output Register 9 • Register 10-21: RPOR10: Peripheral Pin Select Output Register 10 • Register 10-22: RPOR11: Peripheral Pin Select Output Register 11 • Register 10-23: RPOR12: Peripheral Pin Select Output Register 12
Section 12.0 "Timer2/3 and Timer4/5"	The features and operation information was extensively updated in support of Timer4/5 (see **Section 12.1 "32-Bit Operation"** and **Section 12.2 "16-Bit Operation"**). The block diagrams were updated in support of the new timers (see Figure 12-1, Figure 12-2, and Figure 12-3). The following registers were added: • Register 12-3: T4CON Control Register(1) • Register 12-4: T5CON Control Register(1)
Section 15.0 "Motor Control PWM Module"	Updated TABLE 15-1: Internal Pull-down resistors on PWM Fault pins. Note 2 was added to Register 15-5: PWMXCON1: PWMx Control Register 1(1).
Section 19.0 "10-Bit Analog-to-Digital Converter (ADC)"	The number of available input pins and channels were updated from six to 14. Updated FIGURE 19-1: ADC1 Block Diagram for dsPIC33FJXX(GP/MC)101 Devices. Updated FIGURE 19-2: ADC1 Block Diagram for dsPIC33FJXX(GP/MC)102 Devices. Added FIGURE 19-3: ADC1 Block Diagram for dsPIC33FJ32(GP/MC)104 Devices. The following registers were updated: • Register 19-4: AD1CHS123: ADC1 Input Channel 1, 2, 3 Select Register • Register 19-5: AD1CHS0: ADC1 INPUT Channel 0 select Register • Register 19-6: AD1CSSL: ADC1 Input Scan Select Register Low(1,2,3) • Register 19-7: AD1PCFGL: ADC1 Port Configuration Register Low(1,2,3)

TABLE A-3: MAJOR SECTION UPDATES (CONTINUED)

Section Name	Update Description
Section 26.0 "Electrical Characteristics"	Updated the Absolute Maximum Ratings. Updated TABLE 26-3: Thermal Packaging Characteristics. Updated TABLE 26-6: DC Characteristics: Operating Current (Idd). Updated TABLE 26-7: DC Characteristics: Idle Current (Iidle). Updated TABLE 26-8: DC Characteristics: Power-Down Current (Ipd). Updated TABLE 26-9: DC Characteristics: Doze Current (Idoze). Updated TABLE 26-10: DC Characteristics: I/O Pin Input Specifications. Replaced all SPI specifications and figures (see Table 26-29 through Table 26-44 and Figure 26-11 through Figure 26-26).
Section 27.0 "Packaging Information"	Added the following Package Marking Information and Package Drawings: • 44-Lead TQFP • 44-Lead QFN • 44-Lead VTLA (referred to as TLA in the package drawings)

© 2011-2012 Microchip Technology Inc.

Revision E (September 2012)

This revision includes updates to the values in **Section 26.0 "Electrical Characteristics"** and updated packaging diagrams in **Section 27.0 "Packaging Information"**. There are minor text edits throughout the document.

NOTES:

© 2011-2012 Microchip Technology Inc.

INDEX

A

Absolute Maximum Ratings 279
AC Characteristics 292
    10-Bit ADC Specifications 331
    ADC Specifications 330
    Internal Fast RC (FRC) Accuracy 294
    Internal Low-Power RC (LPRC) Accuracy 294
    Load Conditions 292
    Temperature and Voltage Specifications 292
ADC
    Control Registers 220
    Helpful Tips 219
    Initialization 215
    Key Features 215
    Resources 219
Alternate Interrupt Vector Table (AIVT) 95
Analog-to-Digital Converter (ADC) 215
Arithmetic Logic Unit (ALU) 43
Assembler
    MPASM Assembler 276

B

Bit-Reversed Addressing 77
    Example 78
    Implementation 77
    Sequence Table (16-Entry) 78
Block Diagrams
    16-Bit Timer1 Module 163
    6-Channel PWM Module (PWM1) 180
    ADC Conversion Clock Period 219
    ADC1 for dsPIC33FJ32(GP/MC)104 Devices 218
    ADC1 for dsPIC33FJXX(GP/MC)101 Devices 216
    ADC1 for dsPIC33FJXX(GP/MC)102 Devices 217
    Comparator I/O Operating Modes 229
    Comparator Voltage Reference 230
    Connections for On-Chip Voltage Regulator 264
    CTMU Module 254
    Digital Filter Interconnect 231
    DSP Engine 44
    dsPIC33FJXX(GP/MC)10X 28
    dsPIC33FJXX(GP/MC)10X CPU Core 38
    I^2C Module 202
    Input Capture 173
    Multiplexing of Remappable Output for RPn 143
    Oscillator System 125
    Output Compare Module 175
    Real-Time Clock and Calendar (RTCC) Module 241
    Remappable MUX Input for U1RX 142
    Reset System 87
    Shared Port Structure 140
    SPIx Module 195
    Timer2 and Timer4 (16-Bit) 167
    Timer2/3 and Timer4/5 (32-Bit) 166
    Timer3 and Timer5 (16-Bit) 167
    UART Simplified 209
    User-Programmable Blanking Function 230
    Watchdog Timer (WDT) 265
Brown-out Reset (BOR) 264

C

C Compilers
    MPLAB C18 276
Charge Time Measurement Unit. *See* CTMU.
Clock Switching 132
    Enabling 132
    Sequence 132
Code Examples
    Assembly Code for Write-Protected Register Unlock, Fault Clearing Sequence 182
    C Code for Write-Protected Register Unlock, Fault Clearing Sequence 182
    Port Write/Read 141
    PWRSAV Instruction Syntax 133
    Setting the RTCWREN Bit 242
Comparator 229
    Control Registers 232
Configuration Bits 259
CPU
    Barrel Shifter 47
    Control Registers 40
CPU Clocking System 126
    Clock Selection 126
    Clock Sources 126
    Configuration Bit Values for Clock Selection 127
    PLL Configuration 127
CTMU
    Control Registers 255
Customer Change Notification Service 380
Customer Notification Service 380
Customer Support 380

D

Data Accumulators and Adder/Subtracter 45
    Data Space Write Saturation 47
    Overflow and Saturation 45
    Round Logic 46
    Write Back 46
Data Address Space 52
    Alignment 52
    Memory Map for dsPIC33FJ16(GP/MC)101/102 Devices with 1-Kbyte RAM 53
    Memory Map for dsPIC33FJ32(GP/MC)101/102/104 Devices with 1-Kbyte RAM 54
    Near Data Space 52
    Software Stack 73
    Width 52
DC Characteristics 280
    Brown-out Reset (BOR) 281
    Doze Current (I_{DOZE}) 287
    I/O Pin Input Specifications 288
    I/O Pin Output Specifications 290
    Idle Current (I_{IDLE}) 284
    Operating Current (I_{DD}) 282
    Operating MIPS vs. Voltage 280
    Power-Down Current (I_{PD}) 286
    Program Memory 291
    Temperature and Voltage Specifications 281
    Thermal Operating Conditions 280
    Thermal Packaging 280

Development Support 275
Doze Mode 134
DSP Engine 43
    Multiplier 45
dsPIC33FJ16(GP/MC)101/102
    Device Features 2
dsPIC33FJ32(GP/MC)101/102/104
    Device Features 3

E

Electrical Characteristics 279
    AC 292
Equations
    Device Operating Frequency 126
    MS with PLL Mode 127
Errata 24

F

Flash Program Memory 83
    Control Registers 85
    Operations 84
    Programming Algorithm 84
    RTSP Operation 84
    Table Instructions 83

I

I/O Ports 139
    Configuring Analog Port Pins 141
    Open-Drain Configuration 141
    Parallel I/O (PIO) 139
    Write/Read Timing 141
I^2C
    Control Registers 203
    Operating Modes 201
    Registers 201
In-Circuit Debugger 266
In-Circuit Serial Programming (ICSP) 266
Input Capture 173
    Registers 174
Input Change Notification (ICN) 141
Instruction Addressing Modes 73
    File Register Instructions 73
    Fundamental Modes Supported 74
    MAC Instructions 74
    MCU Instructions 73
    Move and Accumulator Instructions 74
    Other Instructions 74
Instruction Set
        Summary 267
    Overview 270
    Symbols Used in Opcode Descriptions 268
Instruction-Based Power-Saving Modes 133
    Idle 134
    Sleep 133
Internet Address 380
Interrupt Controller
    Interrupt Registers
        IECx 98
        IFSx 98
        INTCON1 98
        INTCON2 98
        INTTREG 98
        IPCx 98
    Reset Sequence 95
Interrupt Setup Procedures 124
    Initialization 124
    Interrupt Disable 124
    Interrupt Service Routine (ISR) 124
    Trap Service Routine (TSR) 124
Interrupt Vector Table (IVT) 95
Interrupts Coincident with Power Save Instructions 134

L

LPRC Oscillator
    Use with WDT 265

M

Memory Organization 49
Microchip Internet Web Site 380
Modulo Addressing 75
    Applicability 77
    Operation Example 76
    Start and End Address 75
    W Address Register Selection 75
Motor Control PWM 179
    Control Registers 183
    Faults 181
        At Reset 181
    PWM1 6-Channel Module 179
    Write-Protected Registers 181
MPLAB ASM30 Assembler, Linker, Librarian 276
MPLAB Integrated Development Environment
    Software 275
MPLAB PM3 Device Programmer 278
MPLAB REAL ICE In-Circuit Emulator System 277
MPLINK Object Linker/MPLIB Object Librarian 276

O

Output Compare 175
    Modes 176
        Active-High One-Shot 176
        Active-Low One-Shot 176
        Continuous Pulse 176
        Delayed One-Shot 176
        Module Disabled 176
        PWM with Fault Protection 176
        PWM without Fault Protection 176
        Toggle 176

P

Packaging 337
    Details 340
    Marking 337, 338, 339
Peripheral Module Disable (PMD) 134
Peripheral Pin Select (PPS) 142
    Available Pins 142
    Controlling 142
    Controlling Configuration Changes 144
    Helpful Tips 145
    I/O Resources 145
    Input Selection Sources for Remappable
        Pin (RPn) 143
    Output Selection Sources for Remappable
        Pin (RPn) 144
    Registers 146
Pin Diagrams 4
Pinout I/O Descriptions (table) 29

© 2011-2012 Microchip Technology Inc.

PORTA
Register Map 70
Power-Saving Features 133
Clock Frequency and Switching 133
Program Address Space 49
Construction 79
Data Access from Program Memory Using Program Space Visibility 82
Data Access from Program Memory Using Table Instructions 81
Data Access from, Address Generation 80
Memory Map
dsPIC33FJ16(GP/MC)101/102 Devices 49
dsPIC33FJ32(GP/MC)101/102/104 Devices 50
Table Read Instructions
TBLRDH 81
TBLRDL 81
Visibility Operation 82
Program Memory
Interrupt Vector 51
Organization 51
Reset Vector 51
Programmer's Model 39

R

Reader Response 381
Real-Time Clock and Calendar (RTCC) 241
Register Maps
6-Output PWM1, dsPIC33FJXXMC10X Devices 61
ADC1, dsPIC33FJ32(GP/MC)104 Devices 65
ADC1, dsPIC33FJXX(GP/MC)101 Devices 63
ADC1, dsPIC33FJXX(GP/MC)102 Devices 64
Change Notification, dsPIC33FJ32(GP/MC)104 Devices 58
Change Notification, dsPIC33FJXX(GP/MC)102 Devices 58
Change Notification, dsPIC33FJXXGP101 Devices 58
Change Notification, dsPIC33FJXXMC101 Devices 58
Comparator 67
Configuration Flash Words
dsPIC33FJ16(GP/MC)10X Devices 260
dsPIC33FJ32(GP/MC)10X Devices 260
Configuration Shadow Registers 260
CPU Core 56
CTMU 66
I2C1 62
Input Capture 61
Interrupt Controller 59
NVM 72
Output Compare 61
PAD Configuration 66
PMD 72
PORTA, dsPIC33FJ32(GP/MC)104 Devices 70
PORTA, dsPIC33FJXX(GP/MC)101/102 Devices 69
PORTB, dsPIC33FJXX(GP/MC)102 and dsPIC33FJ32(GP/MC)104 Devices 70
PORTB, dsPIC33FJXXGP101 Devices 71
PORTB, dsPIC33FJXXMC101 Devices 70, 71
PORTC, dsPIC33FJ32(GP/MC)104 Devices 71
PPS Input 67
PPS Output, dsPIC33FJ32(GP/MC)104 Devices 69
PPS Output, dsPIC33FJXX(GP/MC)102 Devices 68
PPS Output, dsPIC33FJXXGP101 Devices 68
PPS Output, dsPIC33FJXXMC101 Devices 68
Real-Time Clock and Calendar 66
SPI1 62
System Control 72
Timers, dsPIC33FJ16(GP/MC)10X Devices 60
Timers, dsPIC33FJ32(GP/MC)10X Devices 60
UART1 62
Registers
AD1CHS0 (ADC1 Input Channel 0 Select) 225
AD1CHS123 (ADC1 Input Channel 1, 2, 3 Select) 224
AD1CON1 (ADC1 Control 1) 220
AD1CON2 (ADC1 Control 2) 222
AD1CON3 (ADC1 Control 3) 223
AD1CSSL (ADC1 Input Scan Select Low) 226
AD1PCFGL (ADC1 Port Configuration Low) 227
ALCFGRPT (Alarm Configuration) 246
ALRMVAL (Alarm Minutes and Seconds Value, ALRMPTR Bits = 00) 252
ALRMVAL (Alarm Month and Day Value, ALRMPTR Bits = 10) 250, 251
ALRMVAL (Alarm Weekday and Hours Value, ALRMPTR Bits = 01) 251
CLKDIV (Clock Divisor) 130
CMSTAT (Comparator Status) 232
CMxCON (Comparator x Control) 233
CMxFLTR (Comparator x Filter Control) 239
CMxMSKCON (Comparator x Mask Gating Control) 237
CMxMSKSRC (Comparator x Mask Source Select) 235
CORCON (Core Control) 42, 99
CTMUCON1 (CTMU Control 1) 255
CTMUCON2 (CTMU Control 2) 256
CTMUICON (CTMU Current Control) 257
CVRCON (Comparator Voltage Reference Control) 240
DEVID (Device ID) 263
DEVREV (Device Revision) 263
I2CxCON (I2Cx Control) 203
I2CxMSK (I2Cx Slave Mode Address Mask) 207
I2CxSTAT (I2Cx Status) 205
ICxCON (Input Capture x Control) 174
IEC0 (Interrupt Enable Control 0) 108
IEC1 (Interrupt Enable Control 1) 109
IEC2 (Interrupt Enable Control 2) 110
IEC3 (Interrupt Enable Control 3) 110
IEC4 (Interrupt Enable Control 4) 111
IFS0 (Interrupt Flag Status 0) 103
IFS1 (Interrupt Flag Status 1) 105
IFS2 (Interrupt Flag Status 2) 106
IFS3 (Interrupt Flag Status 3) 106
IFS4 (Interrupt Flag Status 4) 107
INTCON1 (Interrupt Control 1) 100
INTCON2 (Interrupt Control 2) 102
INTTREG (Interrupt Control and Status) 123
IPC0 (Interrupt Priority Control 0) 112
IPC1 (Interrupt Priority Control 1) 113
IPC14 (Interrupt Priority Control 14) 119
IPC15 (Interrupt Priority Control 15) 120
IPC16 (Interrupt Priority Control 16) 121
IPC19 (Interrupt Priority Control 19) 122
IPC2 (Interrupt Priority Control 2) 114
IPC3 (Interrupt Priority Control 3) 115
IPC4 (Interrupt Priority Control 4) 116
IPC5 (Interrupt Priority Control 5) 117

IPC6 (Interrupt Priority Control 6) 117
IPC7 (Interrupt Priority Control 7) 118
IPC9 (Interrupt Priority Control 9) 119
NVMCON (Flash Memory Control) 85
NVMKEY (Nonvolatile Memory Key) 86
OCxCON (Output Compare x Control) 177
OSCCON (Oscillator Control) 128
OSCTUN (FRC Oscillator Tuning) 131
PADCFG1 (Pad Configuration Control) 245
PMD1 (Peripheral Module Disable Control 1) 135
PMD2 (Peripheral Module Disable Control 2) 136
PMD3 (Peripheral Module Disable Control 3) 137
PMD4 (Peripheral Module Disable Control 4) 137
PWMxCON1 (PWMx Control 1) 186
PWMxCON2 (PWMx Control 2) 187
PWMxKEY (PWMx Unlock) 194
PxDC1 (PWMx Duty Cycle 1) 193
PxDC2 (PWMx Duty Cycle 2) 193
PxDC3 (PWMx Duty Cycle 3) 193
PxDTCON1 (PWMx Dead-Time Control 1) 188
PxDTCON2 (PWMx Dead-Time Control 2) 189
PxFLTACON (PWMx Fault A Control) 190
PxFLTBCON (PWMx Fault B Control) 191
PxOVDCON (PWMx Override Control) 192
PxSECMP (PWMx Special Event Compare) 185
PxTCON (PWMx Time Base Control) 183
PxTMR (PWMx Timer Count Value) 184
PxTPER (PWMx Time Base Period) 184
RCFGCAL (RTCC Calibration
and Configuration) 243
RCON (Reset Control) 88
RPINR0 (Peripheral Pin Select Input 0) 146
RPINR1 (Peripheral Pin Select Input 1) 147
RPINR11 (Peripheral Pin Select Input 11) 152
RPINR18 (Peripheral Pin Select Input 18) 153
RPINR20 (Peripheral Pin Select Input 20) 154
RPINR21 (Peripheral Pin Select Input 21) 155
RPINR3 (Peripheral Pin Select Input 3) 148
RPINR4 (Peripheral Pin Select Input 4) 149
RPINR7 (Peripheral Pin Select Input 7) 150
RPINR8 (Peripheral Pin Select Input 8) 151
RPOR0 (Peripheral Pin Select Output 0) 156
RPOR1 (Peripheral Pin Select Output 1) 156
RPOR10 (Peripheral Pin Select Output 10) 161
RPOR11 (Peripheral Pin Select Output 11) 161
RPOR12 (Peripheral Pin Select Output 12) 162
RPOR2 (Peripheral Pin Select Output 2) 157
RPOR3 (Peripheral Pin Select Output 3) 157
RPOR4 (Peripheral Pin Select Output 4) 158
RPOR5 (Peripheral Pin Select Output 5) 158
RPOR6 (Peripheral Pin Select Output 6) 159
RPOR7 (Peripheral Pin Select Output 7) 159
RPOR8 (Peripheral Pin Select Output 8) 160
RPOR9 (Peripheral Pin Select Output 9) 160
RTCVAL (Minutes and Seconds Value,
RTCPTR Bits = 00) 249
RTCVAL (Year Value, RTCPTR Bits = 11) 247
RTCVAL Month and Day Value,
RTCPTR Bits = 10) 247
RTCVAL Weekdays and Hours Value,
RTCPTR Bits = 01) 248
SPIxCON1 (SPIx Control 1) 198
SPIxCON2 (SPIx Control 2) 200
SPIxSTAT (SPIx Status and Control) 197
SR (CPU STATUS) 40, 99
T1CON (Timer1 Control) 164
T2CON Control 168
T3CON Control 169
T4CON Control 170
T5CON Control 171
UxMODE (UARTx Mode) 211
UxSTA (UARTx Status and Control) 213
Resets 87
BOR (Brown-out Reset) 87
BOR and Power-up Timer (PWRT) 92
CM (Configuration Mismatch Reset) 87
Configuration Mismatch (CM) 93
External (EXTR) 93
Illegal Condition 93
Illegal Opcode 93
Security 93, 94
Uninitialized W Register 93, 94
IOPUWR (Illegal Condition Reset) 87
Illegal Opcode 87
Security 87
Uninitialized W Register 87
MCLR (Master Clear Pin) 87
Oscillator Delays 90
POR (Power-on Reset) 87
Power-on Reset (POR) 92
Software RESET Instruction (SWR) 93
SWR (RESET Instruction) 87
System
Cold Reset 90
Warm Reset 90
Trap Conflict 93
TRAPR (Trap Conflict Reset) 87
Watchdog Timer Time-out (WDTR) 93
WDTO (Watchdog Timer Reset) 87
Revision History 367
RTCC
Control Registers 243
Module Registers 242

S

Serial Peripheral Interface (SPI) 195
Control Registers 197
Helpful Tips 196
Resources 196
Software Simulator (MPLAB SIM) 277
Software Stack Pointer, Frame Pointer
CALL Stack Frame 73
Special Features 259
Code Protection 259
Flexible Configuration 259
In-Circuit Emulation 259
In-Circuit Serial Programming (ICSP) 259
Watchdog Timer (WDT) 259

T

Timer1 163
Timer2/3 and Timer4/5 165
16-Bit Operation 165
32-Bit Operation 165
Control Registers 168
Timing Diagrams
ADC Conversion Characteristics (CHPS<1:0> = 01, SIMSAM = 0, ASAM = 0, SSRC<2:0> = 000) ... 332
ADC Conversion Characteristics (CHPS<1:0> = 01, SIMSAM = 0, ASAM = 1, SSRC<2:0> = 111, SAMC<4:0> = 00001) 332

© 2011-2012 Microchip Technology Inc.

Brown-out Reset Situations 92
CLKO and I/O 295
External Clock 293
I2Cx Bus Data (Master Mode) 326
I2Cx Bus Data (Slave Mode) 328
I2Cx Bus Start/Stop Bits (Master Mode) 326
I2Cx Bus Start/Stop Bits (Slave Mode) 328
Input Capture x (ICx) 299
Motor Control PWM 301
Motor Control PWM Fault 301
OCx/PWM 300
Output Compare x (OCx) 300
Reset, Watchdog Timer, Oscillator Start-up Timer and Power-up Timer 296
SPIx Master Mode (Full-Duplex, CKE = 0, CKP = x, SMP = 1) for dsPIC33FJ16(GP/MC)10X 305
SPIx Master Mode (Full-Duplex, CKE = 0, CKP = x, SMP = 1) for dsPIC33FJ32(GP/MC)10X 317
SPIx Master Mode (Full-Duplex, CKE = 1, CKP = x, SMP = 1) for dsPIC33FJ16(GP/MC)10X 304
SPIx Master Mode (Full-Duplex, CKE = 1, CKP = x, SMP = 1) for dsPIC33FJ32(GP/MC)10X 316
SPIx Master Transmit Mode (Half-Duplex, CKE = 0) for dsPIC33FJ16(GP/MC)10X 302
SPIx Master Transmit Mode (Half-Duplex, CKE = 0) for dsPIC33FJ32(GP/MC)10X 314
SPIx Master Transmit Mode (Half-Duplex, CKE = 1) for dsPIC33FJ16(GP/MC)10X 303
SPIx Master Transmit Mode (Half-Duplex, CKE = 1) for dsPIC33FJ32(GP/MC)10X 315
SPIx Slave Mode (Full-Duplex, CKE = 0, CKP = 0, SMP = 0) for dsPIC33FJ16(GP/MC)10X 312
SPIx Slave Mode (Full-Duplex, CKE = 0, CKP = 0, SMP = 0) for dsPIC33FJ32(GP/MC)10X 324
SPIx Slave Mode (Full-Duplex, CKE = 0, CKP = 1, SMP = 0) for dsPIC33FJ16(GP/MC)10X 310
SPIx Slave Mode (Full-Duplex, CKE = 0, CKP = 1, SMP = 0) for dsPIC33FJ32(GP/MC)10X 322
SPIx Slave Mode (Full-Duplex, CKE = 1, CKP = 0, SMP = 0) for dsPIC33FJ16(GP/MC)10X 306
SPIx Slave Mode (Full-Duplex, CKE = 1, CKP = 0, SMP = 0) for dsPIC33FJ32(GP/MC)10X 318
SPIx Slave Mode (Full-Duplex, CKE = 1, CKP = 1, SMP = 0) for dsPIC33FJ16(GP/MC)10X 308
SPIx Slave Mode (Full-Duplex, CKE = 1, CKP = 1, SMP = 0) for dsPIC33FJ32(GP/MC)10X 320
System Reset 91
Timer1, 2 and 3 External Clock 297
Timing Requirements
10-Bit ADC Conversion 333
Capacitive Loading on Output Pins 292
CLKO and I/O 295
External Clock 293
I2Cx Bus Data (Master Mode) 327
I2Cx Bus Data (Slave Mode) 329
Input Capture x (ICx) 299
Motor Control PWM 301
Output Compare x (OCx) 300
Reset, Watchdog Timer, Oscillator Start-up Timer, Power-up Timer and Brown-out Reset 296
Simple OCx/PWM Mode 300
SPIx Master Mode (Full-Duplex, CKE = 0, CKP = x, SMP = 1) for dsPIC33FJ16(GP/MC)10X 305
SPIx Master Mode (Full-Duplex, CKE = 0, CKP = x, SMP = 1) for dsPIC33FJ32(GP/MC)10X 317
SPIx Master Mode (Full-Duplex, CKE = 1, CKP = x, SMP = 1) for dsPIC33FJ16(GP/MC)10X 304
SPIx Master Mode (Full-Duplex, CKE = 1, CKP = x, SMP = 1) for dsPIC33FJ32(GP/MC)10X 316
SPIx Master Transmit Mode (Half-Duplex) for dsPIC33FJ16(GP/MC)10X 303
SPIx Master Transmit Mode (Half-Duplex) for dsPIC33FJ32(GP/MC)10X 315
SPIx Slave Mode (Full-Duplex, CKE = 0, CKP = 0, SMP = 0) for dsPIC33FJ16(GP/MC)10X 313
SPIx Slave Mode (Full-Duplex, CKE = 0, CKP = 0, SMP = 0) for dsPIC33FJ32(GP/MC)10X 325
SPIx Slave Mode (Full-Duplex, CKE = 0, CKP = 1, SMP = 0) for dsPIC33FJ16(GP/MC)10X 311
SPIx Slave Mode (Full-Duplex, CKE = 0, CKP = 1, SMP = 0) for dsPIC33FJ32(GP/MC)10X 323
SPIx Slave Mode (Full-Duplex, CKE = 1, CKP = 0, SMP = 0) for dsPIC33FJ16(GP/MC)10X 307
SPIx Slave Mode (Full-Duplex, CKE = 1, CKP = 0, SMP = 0) for dsPIC33FJ32(GP/MC)10X 319
SPIx Slave Mode (Full-Duplex, CKE = 1, CKP = 1, SMP = 0) for dsPIC33FJ16(GP/MC)10X 309
SPIx Slave Mode (Full-Duplex, CKE = 1, CKP = 1, SMP = 0) for dsPIC33FJ32(GP/MC)10X 321
Timer1 External Clock 297
Timer2/4 External Clock 298
Timer3/5 External Clock 298
Timing Specifications
Comparator Module 334
Comparator Timing 334
Comparator Voltage Reference 335
Comparator Voltage Reference Settling Time 334
CTMU Current Source 335
PLL Clock 294

U

UART
Control Registers 211
Helpful Tips 210
Resources 210
Universal Asynchronous Receiver Transmitter (UART) 209
Using the RCON Status Bits 94

V

Voltage Regulator (On-Chip) 264

W

Watchdog Timer (WDT) 265
Programming Considerations 265
WWW Address 380
WWW, On-Line Support 24

NOTES:

© 2011-2012 Microchip Technology Inc.

THE MICROCHIP WEB SITE

Microchip provides online support via our WWW site at www.microchip.com. This web site is used as a means to make files and information easily available to customers. Accessible by using your favorite Internet browser, the web site contains the following information:

- **Product Support** – Data sheets and errata, application notes and sample programs, design resources, user's guides and hardware support documents, latest software releases and archived software
- **General Technical Support** – Frequently Asked Questions (FAQs), technical support requests, online discussion groups, Microchip consultant program member listing
- **Business of Microchip** – Product selector and ordering guides, latest Microchip press releases, listing of seminars and events, listings of Microchip sales offices, distributors and factory representatives

CUSTOMER CHANGE NOTIFICATION SERVICE

Microchip's customer notification service helps keep customers current on Microchip products. Subscribers will receive e-mail notification whenever there are changes, updates, revisions or errata related to a specified product family or development tool of interest.

To register, access the Microchip web site at www.microchip.com. Under "Support", click on "Customer Change Notification" and follow the registration instructions.

CUSTOMER SUPPORT

Users of Microchip products can receive assistance through several channels:

- Distributor or Representative
- Local Sales Office
- Field Application Engineer (FAE)
- Technical Support
- Development Systems Information Line

Customers should contact their distributor, representative or field application engineer (FAE) for support. Local sales offices are also available to help customers. A listing of sales offices and locations is included in the back of this document.

Technical support is available through the web site at: http://microchip.com/support

READER RESPONSE

It is our intention to provide you with the best documentation possible to ensure successful use of your Microchip product. If you wish to provide your comments on organization, clarity, subject matter, and ways in which our documentation can better serve you, please FAX your comments to the Technical Publications Manager at (480) 792-4150.

Please list the following information, and use this outline to provide us with your comments about this document.

TO: Technical Publications Manager

RE: Reader Response

Total Pages Sent _____

From: Name _____

Company _____

Address _____

City / State / ZIP / Country _____

Telephone: (_____) _____ - _____ FAX: (_____) _____ - _____

Application (optional):

Would you like a reply? ___Y ___N

Device: dsPIC33FJ16(GP/MC)101/102 and dsPIC33FJ32(GP/MC)101/102/104

Literature Number: DS70652E

Questions:

1. What are the best features of this document?

_____

_____

2. How does this document meet your hardware and software development needs?

_____

_____

3. Do you find the organization of this document easy to follow? If not, why?

_____

_____

4. What additions to the document do you think would enhance the structure and subject?

_____

_____

5. What deletions from the document could be made without affecting the overall usefulness?

_____

_____

6. Is there any incorrect or misleading information (what and where)?

_____

_____

7. How would you improve this document?

_____

_____

© 2011-2012 Microchip Technology Inc.

PRODUCT IDENTIFICATION SYSTEM

To order or obtain information, e.g., on pricing or delivery, refer to the factory or the listed sales office.

dsPIC 33 FJ 16 MC1 02 T E / SP - XXX

- **Microchip Trademark**
- **Architecture**
- **Flash Memory Family**
- **Program Memory Size (Kbyte)**
- **Product Group**
- **Pin Count**
- **Tape and Reel Flag (if applicable)**
- **Temperature Range**
- **Package**
- **Pattern**

Architecture:	33	=	16-bit Digital Signal Controller
Flash Memory Family:	FJ	=	Flash program memory, 3.3V
Product Group:	GP1	=	General Purpose family
	MC1	=	Motor Control family
Pin Count:	01	=	18-pin and 20-pin
	02	=	28-pin and 32-pin
Temperature Range:	I	=	-40°C to+85°C (Industrial)
	E	=	-40°C to+125°C (Extended)
Package:	P	=	Plastic Dual In-Line - 300 mil body (PDIP)
	SS	=	Plastic Shrink Small Outline -5.3 mm body (SSOP)
	SP	=	Skinny Plastic Dual In-Line - 300 mil body (SPDIP)
	SO	=	Plastic Small Outline - Wide, 7.50 mil body (SOIC)
	ML	=	Plastic Quad, No Lead - (28-pin) 6x6 mm body (QFN)
	PT	=	Plastic Thin Quad Flatpack - (44-pin) 10x10 mm body (TQFP)
	TL	=	Very Thin Leadless Array - (36-pin) 5x5 mm body (VTLA)

Examples:

a) dsPIC33FJ16MC102-E/SP: Motor Control dsPIC33, 16-Kbyte program memory, 28-pin, Extended temperature, SPDIP package.

NOTES:

© 2011-2012 Microchip Technology Inc.

Note the following details of the code protection feature on Microchip devices:

- Microchip products meet the specification contained in their particular Microchip Data Sheet.
- Microchip believes that its family of products is one of the most secure families of its kind on the market today, when used in the intended manner and under normal conditions.
- There are dishonest and possibly illegal methods used to breach the code protection feature. All of these methods, to our knowledge, require using the Microchip products in a manner outside the operating specifications contained in Microchip's Data Sheets. Most likely, the person doing so is engaged in theft of intellectual property.
- Microchip is willing to work with the customer who is concerned about the integrity of their code.
- Neither Microchip nor any other semiconductor manufacturer can guarantee the security of their code. Code protection does not mean that we are guaranteeing the product as "unbreakable."

Code protection is constantly evolving. We at Microchip are committed to continuously improving the code protection features of our products. Attempts to break Microchip's code protection feature may be a violation of the Digital Millennium Copyright Act. If such acts allow unauthorized access to your software or other copyrighted work, you may have a right to sue for relief under that Act.

Information contained in this publication regarding device applications and the like is provided only for your convenience and may be superseded by updates. It is your responsibility to ensure that your application meets with your specifications. MICROCHIP MAKES NO REPRESENTATIONS OR WARRANTIES OF ANY KIND WHETHER EXPRESS OR IMPLIED, WRITTEN OR ORAL, STATUTORY OR OTHERWISE, RELATED TO THE INFORMATION, INCLUDING BUT NOT LIMITED TO ITS CONDITION, QUALITY, PERFORMANCE, MERCHANTABILITY OR FITNESS FOR PURPOSE**.** Microchip disclaims all liability arising from this information and its use. Use of Microchip devices in life support and/or safety applications is entirely at the buyer's risk, and the buyer agrees to defend, indemnify and hold harmless Microchip from any and all damages, claims, suits, or expenses resulting from such use. No licenses are conveyed, implicitly or otherwise, under any Microchip intellectual property rights.

QUALITY MANAGEMENT SYSTEM
CERTIFIED BY DNV
═ ISO/TS 16949 ═

Trademarks

The Microchip name and logo, the Microchip logo, dsPIC, FlashFlex, KEELOQ, KEELOQ logo, MPLAB, PIC, PICmicro, PICSTART, PIC^{32} logo, rfPIC, SST, SST Logo, SuperFlash and UNI/O are registered trademarks of Microchip Technology Incorporated in the U.S.A. and other countries.

FilterLab, Hampshire, HI-TECH C, Linear Active Thermistor, MTP, SEEVAL and The Embedded Control Solutions Company are registered trademarks of Microchip Technology Incorporated in the U.S.A.

Silicon Storage Technology is a registered trademark of Microchip Technology Inc. in other countries.

Analog-for-the-Digital Age, Application Maestro, BodyCom, chipKIT, chipKIT logo, CodeGuard, dsPICDEM, dsPICDEM.net, dsPICworks, dsSPEAK, ECAN, ECONOMONITOR, FanSense, HI-TIDE, In-Circuit Serial Programming, ICSP, Mindi, MiWi, MPASM, MPF, MPLAB Certified logo, MPLIB, MPLINK, mTouch, Omniscient Code Generation, PICC, PICC-18, PICDEM, PICDEM.net, PICkit, PICtail, REAL ICE, rfLAB, Select Mode, SQI, Serial Quad I/O, Total Endurance, TSHARC, UniWinDriver, WiperLock, ZENA and Z-Scale are trademarks of Microchip Technology Incorporated in the U.S.A. and other countries.

SQTP is a service mark of Microchip Technology Incorporated in the U.S.A.

GestIC and ULPP are registered trademarks of Microchip Technology Germany II GmbH & Co. & KG, a subsidiary of Microchip Technology Inc., in other countries.

All other trademarks mentioned herein are property of their respective companies.

© 2011-2012, Microchip Technology Incorporated, Printed in the U.S.A., All Rights Reserved.

Printed on recycled paper.

ISBN: 978-1-62076-602-6

Microchip received ISO/TS-16949:2009 certification for its worldwide headquarters, design and wafer fabrication facilities in Chandler and Tempe, Arizona; Gresham, Oregon and design centers in California and India. The Company's quality system processes and procedures are for its PIC® MCUs and dsPIC® DSCs, KEELOQ® code hopping devices, Serial EEPROMs, microperipherals, nonvolatile memory and analog products. In addition, Microchip's quality system for the design and manufacture of development systems is ISO 9001:2000 certified.

Worldwide Sales and Service

AMERICAS

Corporate Office
2355 West Chandler Blvd.
Chandler, AZ 85224-6199
Tel: 480-792-7200
Fax: 480-792-7277
Technical Support:
http://www.microchip.com/support
Web Address:
www.microchip.com

Atlanta
Duluth, GA
Tel: 678-957-9614
Fax: 678-957-1455

Boston
Westborough, MA
Tel: 774-760-0087
Fax: 774-760-0088

Chicago
Itasca, IL
Tel: 630-285-0071
Fax: 630-285-0075

Cleveland
Independence, OH
Tel: 216-447-0464
Fax: 216-447-0643

Dallas
Addison, TX
Tel: 972-818-7423
Fax: 972-818-2924

Detroit
Farmington Hills, MI
Tel: 248-538-2250
Fax: 248-538-2260

Indianapolis
Noblesville, IN
Tel: 317-773-8323
Fax: 317-773-5453

Los Angeles
Mission Viejo, CA
Tel: 949-462-9523
Fax: 949-462-9608

Santa Clara
Santa Clara, CA
Tel: 408-961-6444
Fax: 408-961-6445

Toronto
Mississauga, Ontario, Canada
Tel: 905-673-0699
Fax: 905-673-6509

ASIA/PACIFIC

Asia Pacific Office
Suites 3707-14, 37th Floor
Tower 6, The Gateway
Harbour City, Kowloon
Hong Kong
Tel: 852-2401-1200
Fax: 852-2401-3431

Australia - Sydney
Tel: 61-2-9868-6733
Fax: 61-2-9868-6755

China - Beijing
Tel: 86-10-8569-7000
Fax: 86-10-8528-2104

China - Chengdu
Tel: 86-28-8665-5511
Fax: 86-28-8665-7889

China - Chongqing
Tel: 86-23-8980-9588
Fax: 86-23-8980-9500

China - Hangzhou
Tel: 86-571-2819-3187
Fax: 86-571-2819-3189

China - Hong Kong SAR
Tel: 852-2401-1200
Fax: 852-2401-3431

China - Nanjing
Tel: 86-25-8473-2460
Fax: 86-25-8473-2470

China - Qingdao
Tel: 86-532-8502-7355
Fax: 86-532-8502-7205

China - Shanghai
Tel: 86-21-5407-5533
Fax: 86-21-5407-5066

China - Shenyang
Tel: 86-24-2334-2829
Fax: 86-24-2334-2393

China - Shenzhen
Tel: 86-755-8203-2660
Fax: 86-755-8203-1760

China - Wuhan
Tel: 86-27-5980-5300
Fax: 86-27-5980-5118

China - Xian
Tel: 86-29-8833-7252
Fax: 86-29-8833-7256

China - Xiamen
Tel: 86-592-2388138
Fax: 86-592-2388130

China - Zhuhai
Tel: 86-756-3210040
Fax: 86-756-3210049

ASIA/PACIFIC

India - Bangalore
Tel: 91-80-3090-4444
Fax: 91-80-3090-4123

India - New Delhi
Tel: 91-11-4160-8631
Fax: 91-11-4160-8632

India - Pune
Tel: 91-20-2566-1512
Fax: 91-20-2566-1513

Japan - Osaka
Tel: 81-66-152-7160
Fax: 81-66-152-9310

Japan - Yokohama
Tel: 81-45-471- 6166
Fax: 81-45-471-6122

Korea - Daegu
Tel: 82-53-744-4301
Fax: 82-53-744-4302

Korea - Seoul
Tel: 82-2-554-7200
Fax: 82-2-558-5932 or
82-2-558-5934

Malaysia - Kuala Lumpur
Tel: 60-3-6201-9857
Fax: 60-3-6201-9859

Malaysia - Penang
Tel: 60-4-227-8870
Fax: 60-4-227-4068

Philippines - Manila
Tel: 63-2-634-9065
Fax: 63-2-634-9069

Singapore
Tel: 65-6334-8870
Fax: 65-6334-8850

Taiwan - Hsin Chu
Tel: 886-3-5778-366
Fax: 886-3-5770-955

Taiwan - Kaohsiung
Tel: 886-7-536-4818
Fax: 886-7-330-9305

Taiwan - Taipei
Tel: 886-2-2500-6610
Fax: 886-2-2508-0102

Thailand - Bangkok
Tel: 66-2-694-1351
Fax: 66-2-694-1350

EUROPE

Austria - Wels
Tel: 43-7242-2244-39
Fax: 43-7242-2244-393

Denmark - Copenhagen
Tel: 45-4450-2828
Fax: 45-4485-2829

France - Paris
Tel: 33-1-69-53-63-20
Fax: 33-1-69-30-90-79

Germany - Munich
Tel: 49-89-627-144-0
Fax: 49-89-627-144-44

Italy - Milan
Tel: 39-0331-742611
Fax: 39-0331-466781

Netherlands - Drunen
Tel: 31-416-690399
Fax: 31-416-690340

Spain - Madrid
Tel: 34-91-708-08-90
Fax: 34-91-708-08-91

UK - Wokingham
Tel: 44-118-921-5869
Fax: 44-118-921-5820

11/29/11

© 2011-2012 Microchip Technology Inc.

OCEAN CHIPS
Океан Электроники
Поставка электронных компонентов

Компания «Океан Электроники» предлагает заключение долгосрочных отношений при поставках импортных электронных компонентов на взаимовыгодных условиях!

Наши преимущества:

- Поставка оригинальных импортных электронных компонентов напрямую с производств Америки, Европы и Азии, а так же с крупнейших складов мира;
- Широкая линейка поставок активных и пассивных импортных электронных компонентов (более 30 млн. наименований);
- Поставка сложных, дефицитных, либо снятых с производства позиций;
- Оперативные сроки поставки под заказ (от 5 рабочих дней);
- Экспресс доставка в любую точку России;
- Помощь Конструкторского Отдела и консультации квалифицированных инженеров;
- Техническая поддержка проекта, помощь в подборе аналогов, поставка прототипов;
- Поставка электронных компонентов под контролем ВП;
- Система менеджмента качества сертифицирована по Международному стандарту ISO 9001;
- При необходимости вся продукция военного и аэрокосмического назначения проходит испытания и сертификацию в лаборатории (по согласованию с заказчиком);
- Поставка специализированных компонентов военного и аэрокосмического уровня качества (Xilinx, Altera, Analog Devices, Intersil, Interpoint, Microsemi, Actel, Aeroflex, Peregrine, VPT, Syfer, Eurofarad, Texas Instruments, MS Kennedy, Miteq, Cobham, E2V, MA-COM, Hittite, Mini-Circuits, General Dynamics и др.);

Компания «Океан Электроники» является официальным дистрибьютором и эксклюзивным представителем в России одного из крупнейших производителей разъемов военного и аэрокосмического назначения **«JONHON»**, а так же официальным дистрибьютором и эксклюзивным представителем в России производителя высокотехнологичных и надежных решений для передачи СВЧ сигналов **«FORSTAR»**.

AVIC JONHON

«JONHON» (основан в 1970 г.)

Разъемы специального, военного и аэрокосмического назначения:

(Применяются в военной, авиационной, аэрокосмической, морской, железнодорожной, горно- и нефтедобывающей отраслях промышленности)

«FORSTAR» (основан в 1998 г.)

ВЧ соединители, коаксиальные кабели, кабельные сборки и микроволновые компоненты:

(Применяются в телекоммуникациях гражданского и специального назначения, в средствах связи, РЛС, а так же военной, авиационной и аэрокосмической отраслях промышленности).

FORSTAR®

Телефон: 8 (812) 309-75-97 (многоканальный)
Факс: 8 (812) 320-03-32
Электронная почта: ocean@oceanchips.ru
Web: http://oceanchips.ru/
Адрес: 198099, г. Санкт-Петербург, ул. Калинина, д. 2, корп. 4, лит. А