molex
one company › a world of innovation

This document was generated on 06/07/2010

PLEASE CHECK WWW.MOLEX.COM FOR LATEST PART INFORMATION

Part Number: 0432236155
Status: Active
Overview: modular_plugs_jacks
Description: Modular Jack, Right Angle, Low Profile, 6/2, 6 Ports

Documents:

3D Model	Product Specification PS-43223-001 (PDF)
Drawing (PDF)	RoHS Certificate of Compliance (PDF)

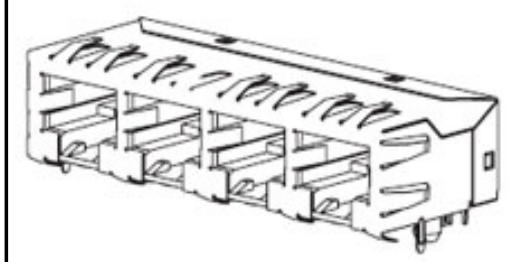

Series image - Reference only

Agency Certification

CSA	LR19980
UL	E107635

General

Product Family	Modular Jacks/Plugs
Series	43223
Component Type	PCB Jack
Magnetic	No
Overview	modular_plugs_jacks
Performance Category	3
Power over Ethernet (PoE)	N/A
Product Name	RJ11

Physical

Boot Color	N/A
Color - Resin	Black
Durability (mating cycles max)	500
Flammability	94V-0
Inverted / Top Latch	No
Keying to Mating Part	None
Lightpipes/LEDs	None
Material - Metal	Phosphor Bronze
Material - Plating Mating	Gold
Material - Plating Termination	Tin
Material - Resin	High Temperature Thermoplastic
Orientation	Right Angle (Side Entry)
PCB Locator	Yes
PCB Retention	Yes
PCB Thickness Recommended (in)	0.062 In
PCB Thickness Recommended (mm)	1.57 mm
Packaging Type	Tray
Panel Mount	Without Flange
Pitch - Mating Interface (in)	0.040 In
Pitch - Mating Interface (mm)	1.02 mm
Pitch - Term. Interface (in)	0.050 In
Pitch - Term. Interface (mm)	1.27 mm
Plating min: Mating (µin)	50
Plating min: Mating (µm)	1.25
Plating min: Termination (µin)	100
Plating min: Termination (µm)	2.5
Ports	6
Positions / Loaded Contacts	6/2
Surface Mount Compatible (SMC)	No
Temperature Range - Operating	-40°C to +85°C
Termination Interface: Style	Through Hole
Waterproof / Dustproof	No

EU RoHS
ELV and RoHS Compliant
REACH SVHC
Not Reviewed
Halogen-Free Status
Not Reviewed

China RoHS

Need more information on product environmental compliance?

Email productcompliance@molex.com
For a multiple part number RoHS Certificate of Compliance, click here

Please visit the Contact Us section for any non-product compliance questions.

Search Parts in this Series
43223Series

Mates With
FCC 68 Plugs

Wire/Cable Type	N/A

Electrical

Current - Maximum per Contact	1.5A
Grounding to PCB	Yes
Grounding to Panel	None
Shielded	No
Voltage - Maximum	150V AC (RMS)

Solder Process Data

Lead-free Process Capability	Wave Capable (TH only)

Material Info

Old Part Number	A432236155

Reference - Drawing Numbers

Packaging Specification	PK-43249-004
Product Specification	PS-43223-001
Sales Drawing	SDA-43223
Test Summary	TS-43223-001

This document was generated on 06/07/2010

PLEASE CHECK WWW.MOLEX.COM FOR LATEST PART INFORMATION

NOTES:
1) MATERIAL:
HOUSING: GLASS FILLED NYLON, UL94V-0, COLOR: BLACK
INSULATOR: GLASS FILLED NYLON, UL94V-0, COLOR: BLACK
TERMINALS: PHOSPHOR BRONZE: .012/ 0.30 THICK
2) FINISH:
TERMINALS:
SELECT GOLD IN CONTACT AREA: 50 MICROINCHES/ 1.27 MICROMETERS MIN.,
*SELECT TIN IN PC TAIL AREA: 100 MICROINCHES/ 2.54 MICROMETERS MIN.,
WITH OVERALL NICKEL UNDERPLATE: 50 MICROINCHES/ 1.27 MICROMETERS MIN.
*THE PRIMARY SHIPPING CARTON WILL BE LABELED "COMPLIANT TO RoHS DIRECTIVE 2002/95/EC AND ELV ANNEX II OF DIRECTIVE 2000/53/EC". CARTONS WITHOUT THIS LABEL MAY CONTAIN PRODUCT WITH TIN-LEAD IN THE PC TAIL AREA.
3) PRODUCT SPECIFICATION AND PROCESSING PARAMETERS: PS-43223-001.
4) PACKAGING SPECIFICATION:
UNSHIELDED CONNECTOR ASSEMBLIES PACKAGED IN TRAYS PER MOLEX PACKAGING SPECIFICATION PK-43249-004.
5) SEE SHEETS 4-6 FOR P.C. BOARD LAYOUTS.
6) SEE SHEET 2 FOR THE SHIELDED JACK ASSEMBLY.
7) FOR 6 CIRCUIT JACKS CENTERLINE TO CENTERLINE SPACING IS .448/ 11.38, FOR 8 CIRCUIT JACKS CENTERLINE TO CENTERLINE SPACING IS .550/ 13.97.
8) ALL UNTOLERANCED DIMENSIONS ARE SHOWN FOR REFERENCE ONLY.
9) THIS PART CONFORMS TO CLASS B REQUIREMENTS OF COSMETIC SPECIFICATION PS-45499-002.

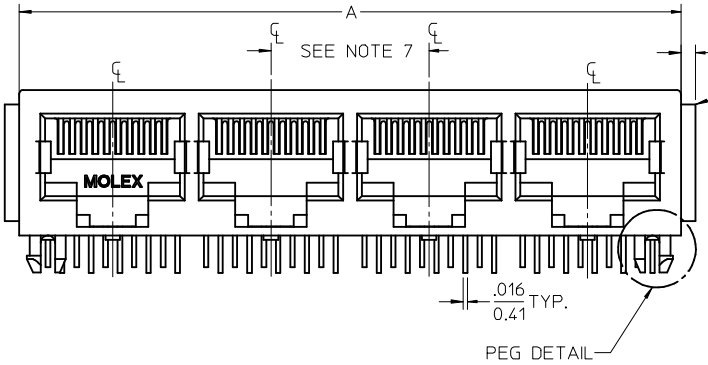

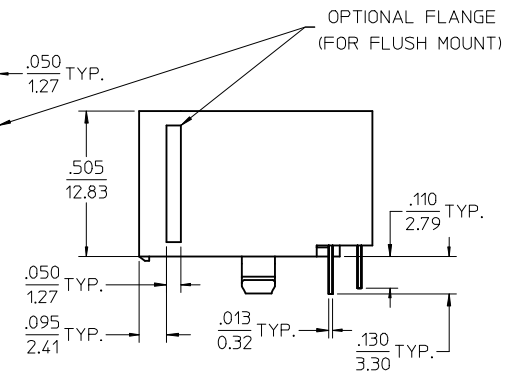

4 PORT 8 LOADED
10 JACK SHOWN

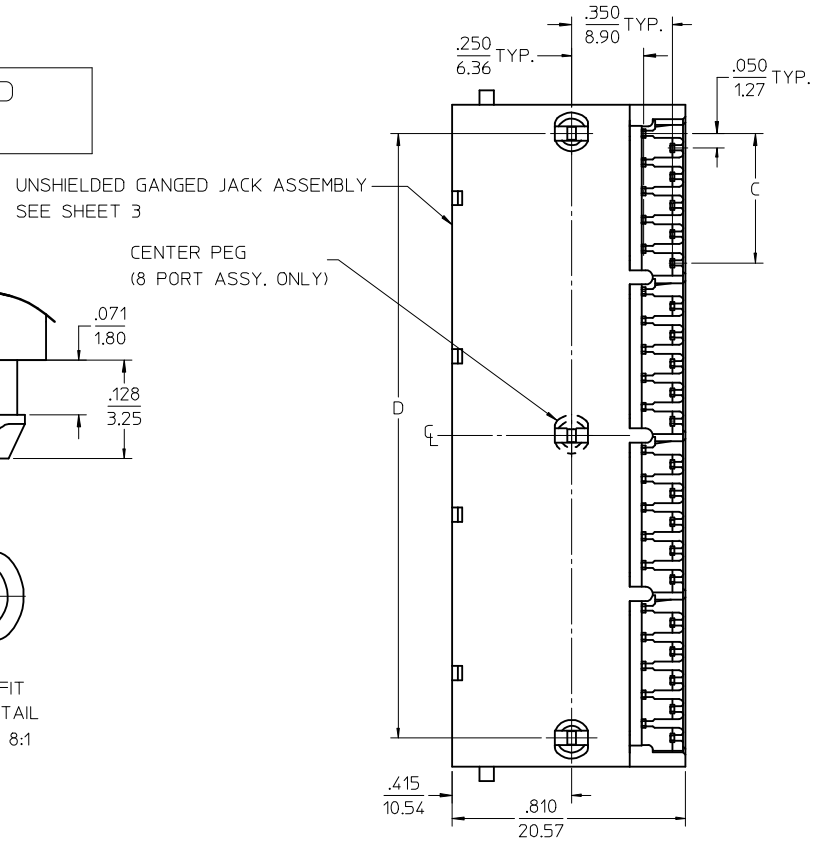

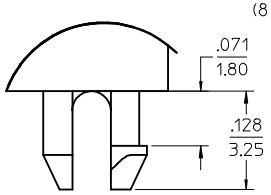

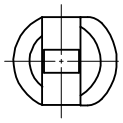

SNAP-FIT
PEG DETAIL
SCALE 8:1

6 CIRCUIT HOUSING

CIRCUIT SIZE	NO. OF PORTS	DIM. A	DIM. C	DIM. D
6	2	.985 (25.02)	.250 (6.35)	.848 (21.54)
4	2	.985 (25.02)	.150 (3.81)	.848 (21.54)
2	2	.985 (25.02)	.050 (1.27)	.848 (21.54)
6	3	1.433 (36.40)	.250 (6.35)	1.296 (32.92)
4	3	1.433 (36.40)	.150 (3.81)	1.296 (32.92)
2	3	1.433 (36.40)	.050 (1.27)	1.296 (32.92)
6	4	1.881 (47.78)	.250 (6.35)	1.744 (44.30)
4	4	1.881 (47.78)	.150 (3.81)	1.744 (44.30)
2	4	1.881 (47.78)	.050 (1.27)	1.744 (44.30)
6	5	2.329 (59.16)	.250 (6.35)	2.192 (55.68)
4	5	2.329 (59.16)	.150 (3.81)	2.192 (55.68)
2	5	2.329 (59.16)	.050 (1.27)	2.192 (55.68)
6	6	2.777 (70.54)	.250 (6.35)	2.640 (67.06)
4	6	2.777 (70.54)	.150 (3.81)	2.640 (67.06)
2	6	2.777 (70.54)	.050 (1.27)	2.640 (67.06)
6	8	3.673 (93.29)	.250 (6.35)	3.536 (89.81)
4	8	3.673 (93.29)	.150 (3.81)	3.536 (89.81)
2	8	3.673 (93.29)	.050 (1.27)	3.536 (89.81)

8 CIRCUIT HOUSING

CIRCUIT SIZE	NO. OF PORTS	DIM. A	DIM. C	DIM. D
10	2	1.200 (30.48)	.450 (11.43)	1.000 (25.40)
8	2	1.200 (30.48)	.350 (8.89)	1.000 (25.40)
6	2	1.200 (30.48)	.250 (6.35)	1.000 (25.40)
10	3	1.750 (44.45)	.450 (11.43)	1.550 (39.37)
8	3	1.750 (44.45)	.350 (8.89)	1.550 (39.37)
6	3	1.750 (44.45)	.250 (6.35)	1.550 (39.37)
4	3	1.750 (44.45)	.150 (3.81)	1.550 (39.37)
10	4	2.300 (58.42)	.450 (11.43)	2.100 (53.34)
8	4	2.300 (58.42)	.350 (8.89)	2.100 (53.34)
4	4	2.300 (58.42)	.150 (3.81)	2.100 (53.34)
4	5	2.850 (72.39)	.150 (3.81)	2.650 (67.31)
10	5	2.850 (72.39)	.450 (11.43)	2.650 (67.31)
8	5	2.850 (72.39)	.350 (8.89)	2.650 (67.31)
10	6	3.400 (86.36)	.450 (11.43)	3.200 (81.28)
8	6	3.400 (86.36)	.350 (8.89)	3.200 (81.28)
10	8	4.500 (114.30)	.450 (11.43)	4.300 (109.22)
8	8	4.500 (114.30)	.350 (8.89)	4.300 (109.22)

ADD BLOCK TOL
EC NO: UCP2009-0477 2008/09/05
DRWN: JBELL 2008/09/11
CH'KD: JBELL 2008/09/11
APPR: FSMITH 2008/09/11
DESCRIPTION
K1
REV

QUALITY SYMBOLS
▼=0
▽=0

GENERAL TOLERANCES (UNLESS SPECIFIED)

	mm	INCH
4 PLACES	± ---	± ---
3 PLACES	± ---	± .015
2 PLACES	± 0.38	± ---
1 PLACE	± ---	± ---

ANGULAR ±1/2°

DRAFT WHERE APPLICABLE MUST REMAIN WITHIN DIMENSIONS

DIMENSION STYLE: IN/MM
SCALE: 3:1
DESIGN UNITS: INCH
THIRD ANGLE PROJECTION

DRAWN BY: JTR DATE: 1993/10/18
CHECKED BY: JTR DATE: 1993/10/18
APPROVED BY: RAS DATE: 1993/10/18
MATERIAL NO.: SEE SHTS 3
SIZE: C

TITLE: LOW PROFILE GANGED, RIGHT ANGLE MODULAR JACK ASSEMBLY
MOLEX INCORPORATED
DOCUMENT NO.: SDA-43223
SHEET NO.: 1 OF 6

THIS DRAWING CONTAINS INFORMATION THAT IS PROPRIETARY TO MOLEX INCORPORATED AND SHOULD NOT BE USED WITHOUT WRITTEN PERMISSION

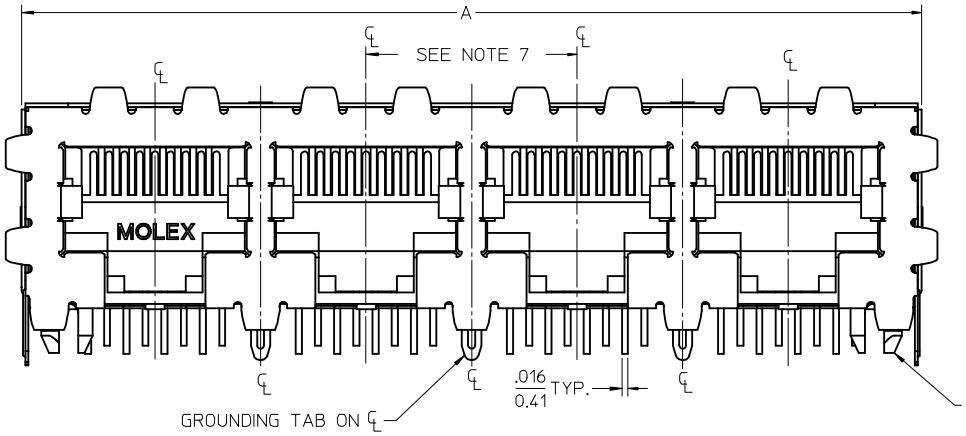

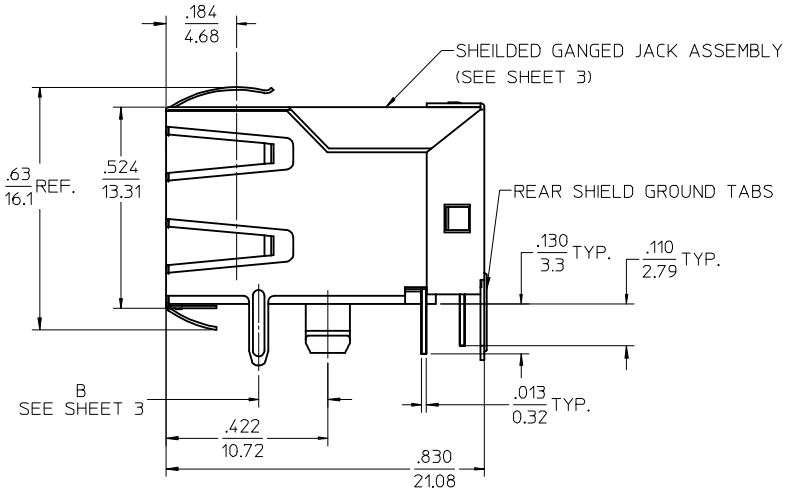

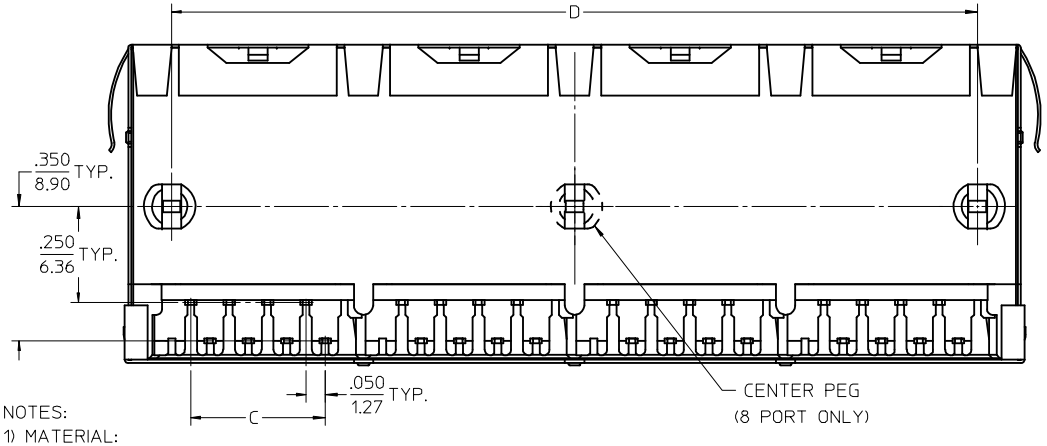

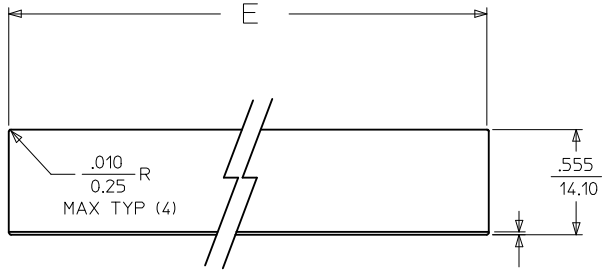

SUGGESTED PANEL OPENING

SCALE : 2/1

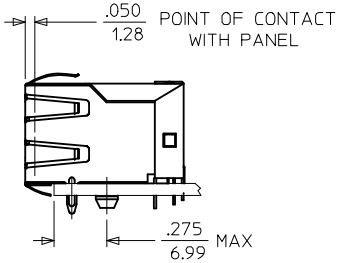

NOTES:

1) MATERIAL:
   HOUSING: GLASS FILLED NYLON, UL94V-0, COLOR: BLACK
   INSULATOR: GLASS FILLED NYLON, UL94V-0, COLOR: BLACK
   TERMINALS: PHOSPHOR BRONZE: .012/ 0.30 THICK
   SHIELD: BRASS, FRONT .007/ 0.18 THICK, REAR .010/ 0.25 THICK
2) FINISH:
   TERMINALS:
      SELECT GOLD IN CONTACT AREA: 50 MICROINCHES/ 1.27 MICROMETERS MIN.,
      *SELECT TIN IN PC TAIL AREA: 100 MICROINCHES/ 2.54 MICROMETERS MIN.,
      WITH OVERALL NICKEL UNDERPLATE: 50 MICROINCHES/ 1.27 MICROMETERS MIN.
   SHIELD:
      *100 MICROINCHES/ 2.54 MICROMETERS NICKEL OVER 50 MICROINCHES/ 1.27
      MICROMETERS COPPER UNDERPLATE. PCB GROUND TABS DIPPED IN TIN
         *THE PRIMARY SHIPPING CARTON WILL BE LABELED "COMPLIANT TO RoHS
         DIRECTIVE 2002/95/EC AND ELV ANNEX II OF DIRECTIVE 2000/53/EC".
         CARTONS WITHOUT THIS LABEL MAY CONTAIN PRODUCT WITH TIN-LEAD
         IN THE PC TAIL AND/OR SHIELD.
3) PRODUCT SPECIFICATION AND PROCESSING PARAMETERS: PS-43223-001.
4) PACKAGING SPECIFICATION:
   SHIELDED CONNECTOR ASSEMBLIES PACKAGED IN TRAYS PER MOLEX
   PACKAGING SPECIFICATION PK-44150-004.
5) SEE SHEETS 4-6 FOR P.C. BOARD LAYOUTS.
6) REAR SHIELD IS AVAILABLE WITH (1) CENTERED GROUND TAB ON 4 & 8 PORT VERSIONS.
7) 8 CIRCUIT JACKS CENTERLINE TO CENTERLINE SPACING IS .550/ 13.97.
8) ALL UNTOLERANCED DIMENSIONS ARE SHOWN FOR REFERENCE ONLY.
9) THIS PART CONFORMS TO CLASS B REQUIREMENTS OF COSMETIC
   SPECIFICATION PS-45499-002.

HOUSING SIZE	CIRCUIT SIZE	NO. OF PORTS	DIM. A	DIM. C	DIM. D	DIM. E
8	8	2	1.224 (31.09)	.350 (8.89)	1.000 (25.40)	1.255 (31.88)
8	8	4	2.324 (59.03)	.350 (8.89)	2.100 (53.34)	2.355 (59.82)
8	8	6	3.424 (86.97)	.350 (8.89)	3.200 (81.28)	3.455 (87.76)
8	8	8	4.524 (114.91)	.350 (8.89)	4.300 (109.22)	4.555 (115.97)
8	2	8	4.524 (114.91)	.050 (1.27)	4.300 (109.22)	4.555 (115.97)

4 PORT 8 LOADED
8 JACK SHOWN

SEE SHEET 1
EC NO: UCP2009-0477 2008/09/05
DRWN: JBELL 2008/09/11
CH'KD: JBELL 2008/09/11
APPR: FSMITH 2008/09/11
DESCRIPTION
K1
REV

QUALITY SYMBOLS
▼=0
▽=0

GENERAL TOLERANCES (UNLESS SPECIFIED)

	mm	INCH
4 PLACES	± ---	± ---
3 PLACES	± ---	± .015
2 PLACES	± 0.38	± ---
1 PLACE	± ---	± ---
ANGULAR ±1/2°		

DRAFT WHERE APPLICABLE MUST REMAIN WITHIN DIMENSIONS

DIMENSION STYLE: IN/MM
SCALE: 4:1
DESIGN UNITS: INCH
THIRD ANGLE PROJECTION

DRAWN BY JTR	DATE 1993/10/18	TITLE: LOW PROFILE GANGED, RIGHT ANGLE MODULAR JACK ASSEMBLY
CHECKED BY JTR	DATE 1993/10/18	
APPROVED BY RAS	DATE 1993/10/18	molex MOLEX INCORPORATED
MATERIAL NO. SEE SHTS 3		DOCUMENT NO. SDA-43223 — SHEET NO. 2 OF 6

SIZE C

THIS DRAWING CONTAINS INFORMATION THAT IS PROPRIETARY TO MOLEX INCORPORATED AND SHOULD NOT BE USED WITHOUT WRITTEN PERMISSION

FLUSH MOUNT (UNSHIELDED)

ASSEMBLY NUMBER	CONNECTOR SIZE	NUMBER OF CIRCUITS	NUMBER OF PORTS	PACKAGING STYLE	PACKAGING SPECIFICATION
43223-6001	6	6	2	TRAY	PK-43249-004
43223-6004	6	6	3		
43223-6007	6	6	4		
43223-6010	6	6	5		
43223-6013	6	6	6		
43223-6019	6	6	8		
43223-6022	6	4	2		
43223-6025	6	4	3		
43223-6028	6	4	4		
43223-6031	6	4	5		
43223-6034	6	4	6		
43223-6040	6	4	8		
43223-6043	6	2	2		
43223-6046	6	2	3		
43223-6049	6	2	4		
43223-6052	6	2	5		
43223-6055	6	2	6		
43223-6058	6	2	8	TRAY	PK-43249-004
43223-8001	8	10	2	TRAY	PK-43249-004
43223-8004	8	10	3		
43223-8007	8	10	4		
43223-8010	8	10	5		
43223-8013	8	10	6		
43223-8019	8	10	8		
43223-8022	8	8	2		
43223-8025	8	8	3		
43223-8028	8	8	4		
43223-8031	8	8	5		
43223-8034	8	8	6		
43223-8040	8	8	8		
43223-8041	8	4	5		
43223-8042	8	6	3	TRAY	PK-43249-004

FLANGELESS (UNSHIELDED)

ASSEMBLY NUMBER	CONNECTOR SIZE	NUMBER OF CIRCUITS	NUMBER OF PORTS	PACKAGING STYLE	PACKAGING SPECIFICATION
43223-6101	6	6	2	TRAY	PK-43249-004
43223-6104	6	6	3		
43223-6107	6	6	4		
43223-6110	6	6	5		
43223-6113	6	6	6		
43223-6119	6	6	8		
43223-6122	6	4	2		
43223-6125	6	4	3		
43223-6128	6	4	4		
43223-6131	6	4	5		
43223-6134	6	4	6		
43223-6140	6	4	8		
43223-6143	6	2	2		
43223-6146	6	2	3		
43223-6149	6	2	4		
43223-6152	6	2	5		
43223-6155	6	2	6		
43223-6158	6	2	8	TRAY	PK-43249-004
43223-8101	8	10	2	TRAY	PK-43249-004
43223-8104	8	10	3		
43223-8107	8	10	4		
43223-8110	8	10	5		
43223-8113	8	10	6		
43223-8119	8	10	8		
43223-8122	8	8	2		
43223-8131	8	8	3		
43223-8140	8	8	4		
43223-8149	8	8	5		
43223-8158	8	8	6		
43223-8176	8	8	8	TRAY	PK-43249-004
43223-8191	8	6	2	TUBE	PK-43249-005
43223-8192	8	4	4	TUBE	PK-43249-005
43223-8193	8	4	3	TUBE	PK-43249-005
43223-8195	8	8	2	TUBE	PK-43249-005
43223-8196	8	8	3	TUBE	PK-43249-005
43223-8197	8	8	4	TUBE	PK-43249-005

FLANGELESS (SHIELDED)

ASSEMBLY NUMBER	DIMENSION "B"	CONNECTOR SIZE	NUMBER OF CIRCUITS	NUMBER OF PORTS	NUMBER OF REAR SHIELD GROUND TABS	PACKAGING STYLE	PACKAGING SPECIFICATION
43223-8128	.180	8	8	2	1	TRAY	PK-44150-004
43223-8146	.180	8	8	4	3		
43223-8164	.180	8	8	6	5		
43223-8182	.180	8	8	8	7		
43223-8185	.180	8	8	8	1		
43223-8188	.180	8	8	4	1		
43223-8194	.180	8	2	8	7	TRAY	PK-44150-004
43223-8301	.145	8	8	2	1	TRAY	PK-44150-004
43223-8302	.145	8	8	4	3		
43223-8303	.145	8	8	6	5		
43223-8304	.145	8	8	8	7		
43223-8305	.145	8	8	8	1		
43223-8306	.145	8	8	4	1		
43223-8307	.145	8	8	2	7	TRAY	PK-44150-004

SNAP FIT PEG VERSIONS

SEE SHEET 1
EC NO: UCP2009-0477
DRWN: JBELL 2008/09/05
CH'KD: JBELL 2008/09/11
APPR: FSMITH 2008/09/11
DESCRIPTION
K1
REV

QUALITY SYMBOLS
▼=0
(C)=0

GENERAL TOLERANCES (UNLESS SPECIFIED)

	mm	INCH
4 PLACES	± ---	± ---
3 PLACES	± ---	± .015
2 PLACES	± 0.38	± ---
1 PLACE	± ---	± ---
ANGULAR ±1/2°		

DRAFT WHERE APPLICABLE MUST REMAIN WITHIN DIMENSIONS

DIMENSION STYLE: IN/MM
SCALE: 2:1
DESIGN UNITS: INCH
THIRD ANGLE PROJECTION

DRAWN BY: JTR DATE: 1993/10/18
CHECKED BY: JTR DATE: 1993/10/18
APPROVED BY: RAS DATE: 1993/10/18

TITLE: LOW PROFILE GANGED, RIGHT ANGLE MODULAR JACK ASSEMBLY

molex MOLEX INCORPORATED

MATERIAL NO.: SEE CHART
DOCUMENT NO.: SDA-43223
SHEET NO.: 3 OF 6
SIZE: C

THIS DRAWING CONTAINS INFORMATION THAT IS PROPRIETARY TO MOLEX INCORPORATED AND SHOULD NOT BE USED WITHOUT WRITTEN PERMISSION

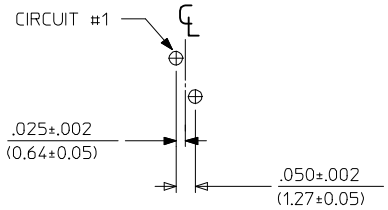

6 LOADED 2 DETAIL
SCALE: 4/1

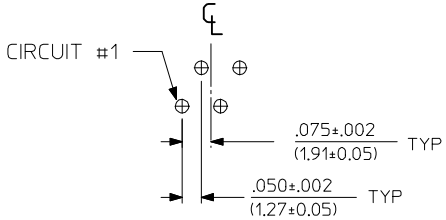

6 LOADED 4 DETAIL
SCALE: 4/1

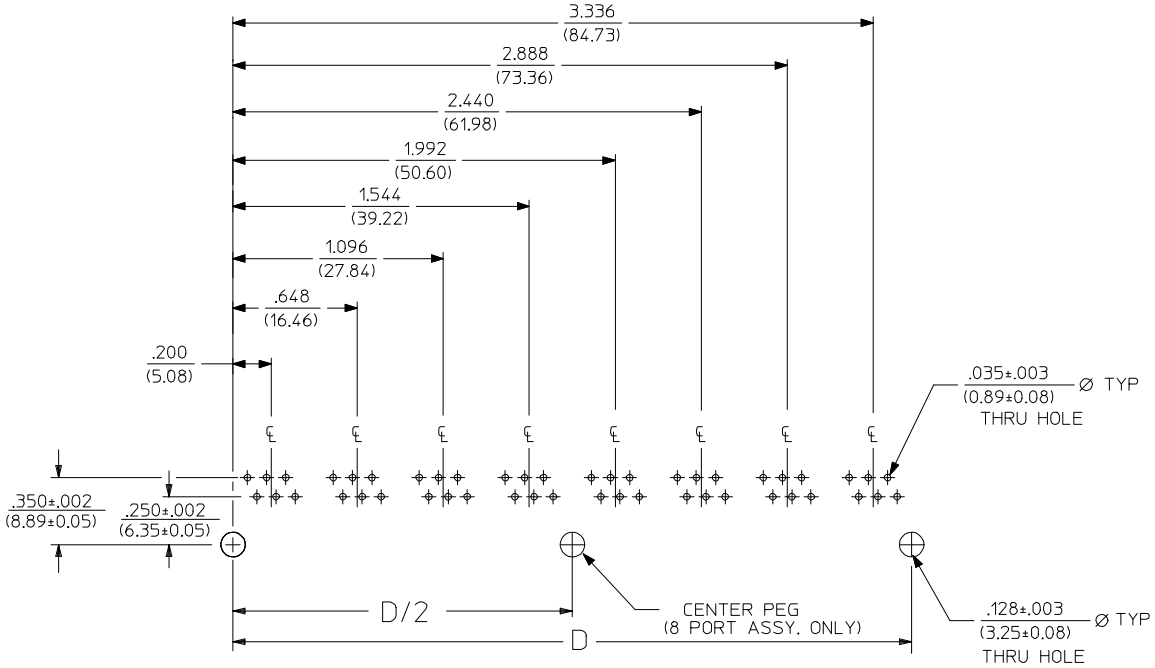

SUGGESTED P.C. BOARD LAYOUT
COMPONENT SIDE OF BOARD
8 PORT, 6 LOADED 6, LAYOUT SHOWN
(SNAP-FIT VERSIONS)

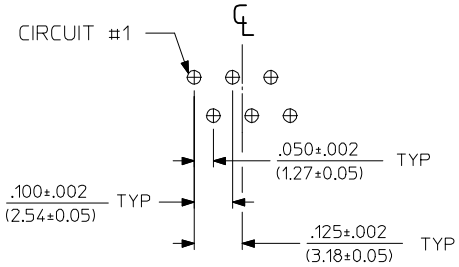

6 LOADED 6 DETAIL
SCALE: 4/1

NUMBER OF PORTS	DIM. D
2	.848 (21.54)
3	1.296 (32.92)
4	1.744 (44.30)
5	2.192 (55.68)
6	2.640 (67.06)
8	3.536 (89.81)

NOTES:
1. RECOMMENDED PCB THICKNESS .062±.005/(1.57±0.13)

SEE SHEET 1
EC NO: UCP2009-0477
DRWN: JBELL 2008/09/05
CH'KD: JBELL 2008/09/11
APPR: FSMITH 2008/09/11
DESCRIPTION
K1
REV

QUALITY SYMBOLS
▼=0
▽=0

GENERAL TOLERANCES (UNLESS SPECIFIED)

	mm	INCH
4 PLACES	±---	±---
3 PLACES	±---	±.015
2 PLACES	±0.38	±---
1 PLACE	±---	±---
ANGULAR ±1/2°		

DRAFT WHERE APPLICABLE MUST REMAIN WITHIN DIMENSIONS

DIMENSION STYLE: IN/MM
SCALE: 2:1
DESIGN UNITS: INCH
THIRD ANGLE PROJECTION

DRAWN BY	JTR	DATE 1993/10/18
CHECKED BY	JTR	DATE 1993/10/18
APPROVED BY	RAS	DATE 1993/10/18

TITLE: LOW PROFILE GANGED, RIGHT ANGLE MODULAR JACK ASSEMBLY

MOLEX INCORPORATED

MATERIAL NO.: SEE SHT 3
DOCUMENT NO.: SDA-43223
SHEET NO.: 4 OF 6
SIZE: C

THIS DRAWING CONTAINS INFORMATION THAT IS PROPRIETARY TO MOLEX INCORPORATED AND SHOULD NOT BE USED WITHOUT WRITTEN PERMISSION

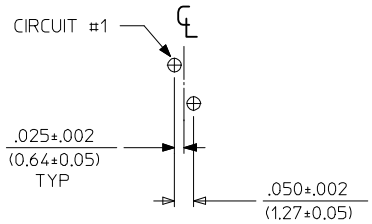

8 LOADED 2 DETAIL

SCALE: 4/1

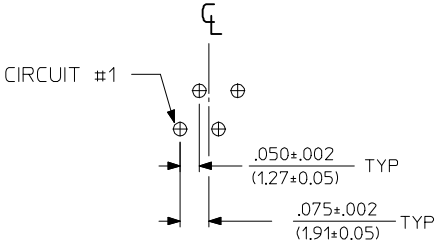

8 LOADED 4 DETAIL

SCALE: 4/1

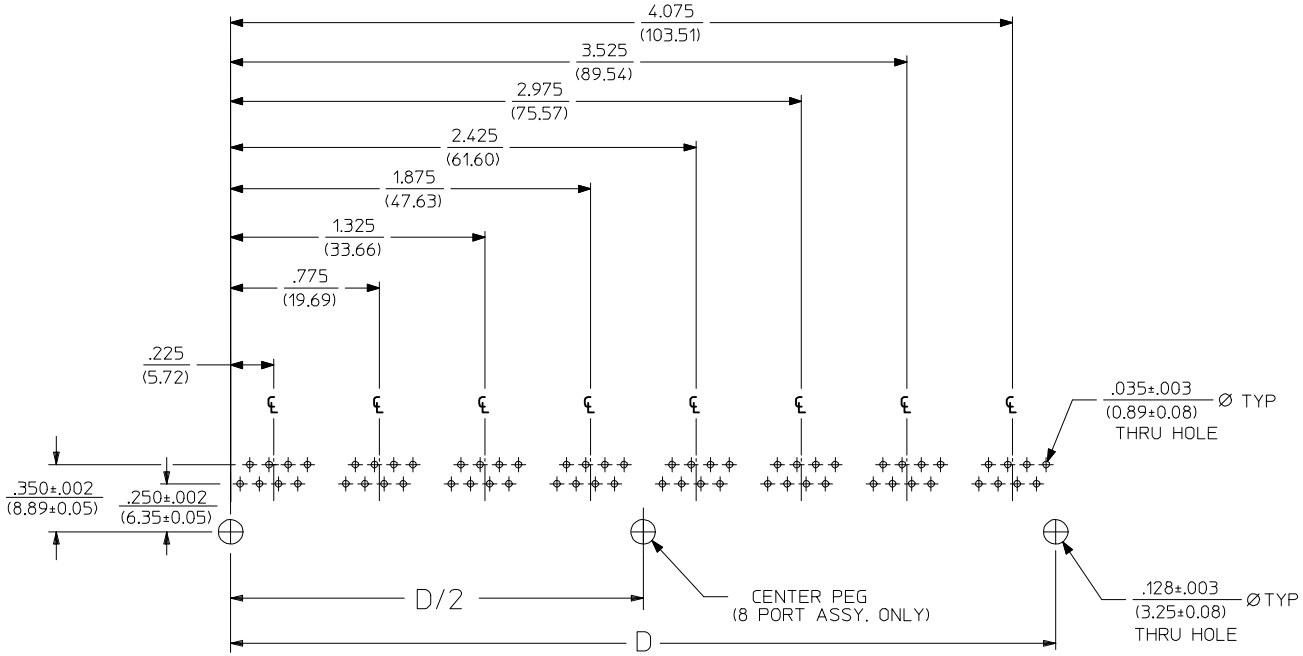

SUGGESTED P.C. BOARD LAYOUT
COMPONENT SIDE OF BOARD
8 PORT, 8 LOADED 8
(SNAP-FIT VERSIONS)

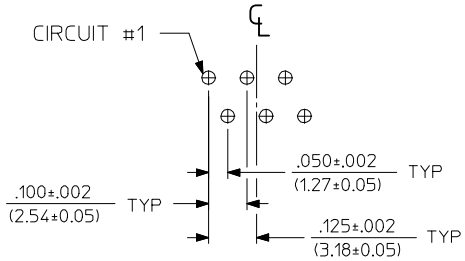

8 LOADED 6 DETAIL

SCALE: 4/1

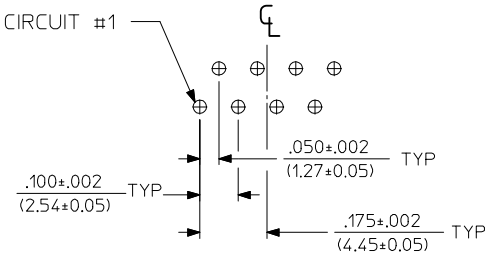

8 LOADED 8 DETAIL

SCALE: 4/1

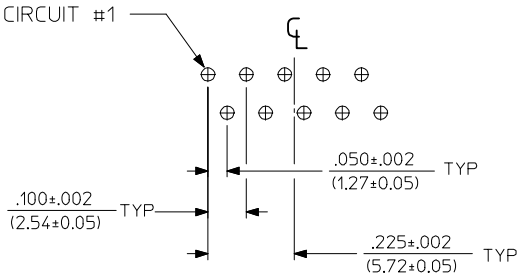

8 LOADED 10 DETAIL

SCALE: 4/1

NOTES:
1. RECOMMENDED PCB THICKNESS: .062±.005/(1.57±0.13)

NUMBER OF PORTS	DIM. D
2	1.000 (25.40)
3	1.550 (39.37)
4	2.100 (53.34)
5	2.650 (67.31)
6	3.200 (81.28)
8	4.300 (109.32)

SEE SHEET 1
EC NO: UCP2009-0477 2008/09/05
DRWN: JBELL 2008/09/11
CH'KD: JBELL 2008/09/11
APPR: FSMITH 2008/09/11
DESCRIPTION
K1
REV

QUALITY SYMBOLS
▼=0
▽C=0

GENERAL TOLERANCES (UNLESS SPECIFIED)

	mm	INCH
4 PLACES	± ---	± ---
3 PLACES	± ---	± .015
2 PLACES	± 0.38	± ---
1 PLACE	± ---	± ---
ANGULAR ±1/2°		

DRAFT WHERE APPLICABLE MUST REMAIN WITHIN DIMENSIONS

DIMENSION STYLE: IN/MM
SCALE: 2:1
DESIGN UNITS: INCH
THIRD ANGLE PROJECTION

		DATE
DRAWN BY	JTR	1993/10/18
CHECKED BY	JTR	1993/10/18
APPROVED BY	RAS	1993/10/18

TITLE: LOW PROFILE GANGED, RIGHT ANGLE MODULAR JACK ASSEMBLY

molex MOLEX INCORPORATED

MATERIAL NO.: SEE SHT 3
DOCUMENT NO.: SDA-43223
SHEET NO.: 5 OF 6
SIZE: C

THIS DRAWING CONTAINS INFORMATION THAT IS PROPRIETARY TO MOLEX INCORPORATED AND SHOULD NOT BE USED WITHOUT WRITTEN PERMISSION

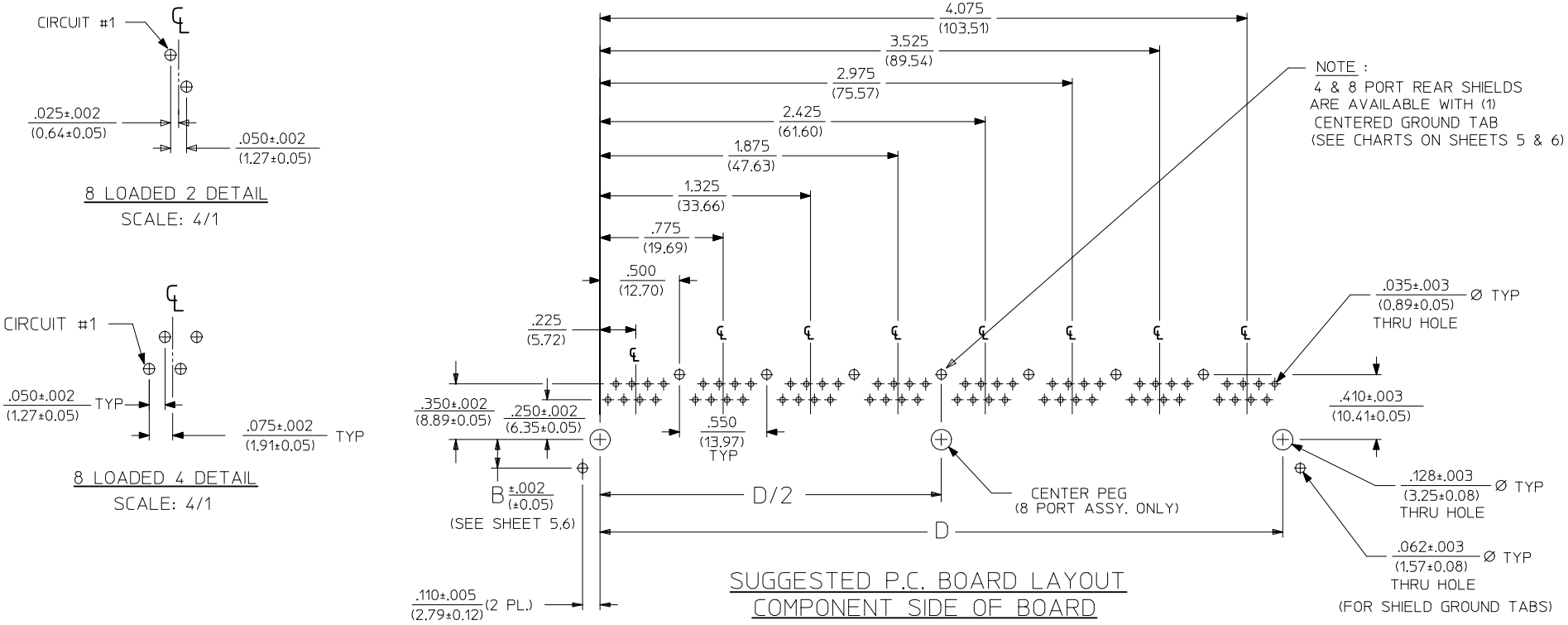

NOTES:
1. RECOMMENDED PCB THICKNESS: .062±.005/(1.57±0.13)

NUMBER OF PORTS	DIM. D
2	1.000 (25.40)
4	2.100 (53.34)
6	3.200 (81.28)
8	4.300 (109.32)

SEE SHEET 1
EC NO: UCP2009-0477
DRWN: JBELL 2008/09/05
CH'KD: JBELL 2008/09/11
APPR: FSMITH 2008/09/11
DESCRIPTION
K1
REV

QUALITY SYMBOLS
▼=0
▽=0

GENERAL TOLERANCES (UNLESS SPECIFIED)

	mm	INCH
4 PLACES	± ---	± ---
3 PLACES	± ---	± .015
2 PLACES	± 0.38	± ---
1 PLACE	± ---	± ---
ANGULAR ±1/2°		

DRAFT WHERE APPLICABLE MUST REMAIN WITHIN DIMENSIONS

DIMENSION STYLE: IN/MM
SCALE: 2:1
DESIGN UNITS: INCH
THIRD ANGLE PROJECTION

		DATE
DRAWN BY	JTR	1993/10/18
CHECKED BY	JTR	1993/10/18
APPROVED BY	RAS	1993/10/18

TITLE: LOW PROFILE GANGED, RIGHT ANGLE MODULAR JACK ASSEMBLY

molex MOLEX INCORPORATED

MATERIAL NO.: SEE SHT 3
DOCUMENT NO.: SDA-43223
SHEET NO.: 6 OF 6
SIZE: C

THIS DRAWING CONTAINS INFORMATION THAT IS PROPRIETARY TO MOLEX INCORPORATED AND SHOULD NOT BE USED WITHOUT WRITTEN PERMISSION

OCEAN CHIPS
Океан Электроники
Поставка электронных компонентов

Компания «Океан Электроники» предлагает заключение долгосрочных отношений при поставках импортных электронных компонентов на взаимовыгодных условиях!

Наши преимущества:

- Поставка оригинальных импортных электронных компонентов напрямую с производств Америки, Европы и Азии, а так же с крупнейших складов мира;
- Широкая линейка поставок активных и пассивных импортных электронных компонентов (более 30 млн. наименований);
- Поставка сложных, дефицитных, либо снятых с производства позиций;
- Оперативные сроки поставки под заказ (от 5 рабочих дней);
- Экспресс доставка в любую точку России;
- Помощь Конструкторского Отдела и консультации квалифицированных инженеров;
- Техническая поддержка проекта, помощь в подборе аналогов, поставка прототипов;
- Поставка электронных компонентов под контролем ВП;
- Система менеджмента качества сертифицирована по Международному стандарту ISO 9001;
- При необходимости вся продукция военного и аэрокосмического назначения проходит испытания и сертификацию в лаборатории (по согласованию с заказчиком);
- Поставка специализированных компонентов военного и аэрокосмического уровня качества (Xilinx, Altera, Analog Devices, Intersil, Interpoint, Microsemi, Actel, Aeroflex, Peregrine, VPT, Syfer, Eurofarad, Texas Instruments, MS Kennedy, Miteq, Cobham, E2V, MA-COM, Hittite, Mini-Circuits, General Dynamics и др.);

Компания «Океан Электроники» является официальным дистрибьютором и эксклюзивным представителем в России одного из крупнейших производителей разъемов военного и аэрокосмического назначения **«JONHON»**, а так же официальным дистрибьютором и эксклюзивным представителем в России производителя высокотехнологичных и надежных решений для передачи СВЧ сигналов **«FORSTAR»**.

AVIC JONHON

«JONHON» (основан в 1970 г.)

Разъемы специального, военного и аэрокосмического назначения:

(Применяются в военной, авиационной, аэрокосмической, морской, железнодорожной, горно- и нефтедобывающей отраслях промышленности)

«FORSTAR» (основан в 1998 г.)

ВЧ соединители, коаксиальные кабели, кабельные сборки и микроволновые компоненты:

(Применяются в телекоммуникациях гражданского и специального назначения, в средствах связи, РЛС, а так же военной, авиационной и аэрокосмической отраслях промышленности).

FORSTAR®

Телефон: 8 (812) 309-75-97 (многоканальный)
Факс: 8 (812) 320-03-32
Электронная почта: ocean@oceanchips.ru
Web: http://oceanchips.ru/
Адрес: 198099, г. Санкт-Петербург, ул. Калинина, д. 2, корп. 4, лит. А