THIS DRAWING IS UNPUBLISHED. RELEASED FOR PUBLICATION 20
© COPYRIGHT 20 BY - ALL RIGHTS RESERVED.

REVISIONS

P	LTR	DESCRIPTION	DATE	DWN	APVD
	F31	REVISED PER ECO-15-012265	24AUG2015	DLD	DCM
	F32	REVISED PER ECO-16-003418	08MAR2016	DLD	DCM

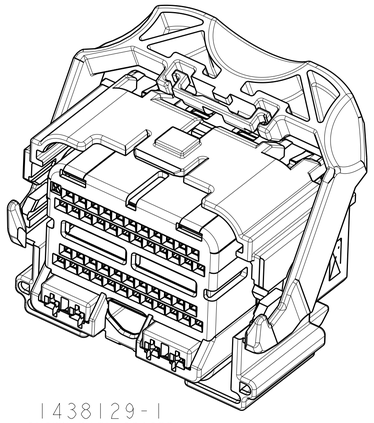

1438129-1
SHOWN WITH SPACER
IN SEATED POSITION

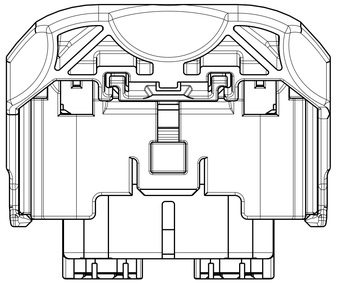

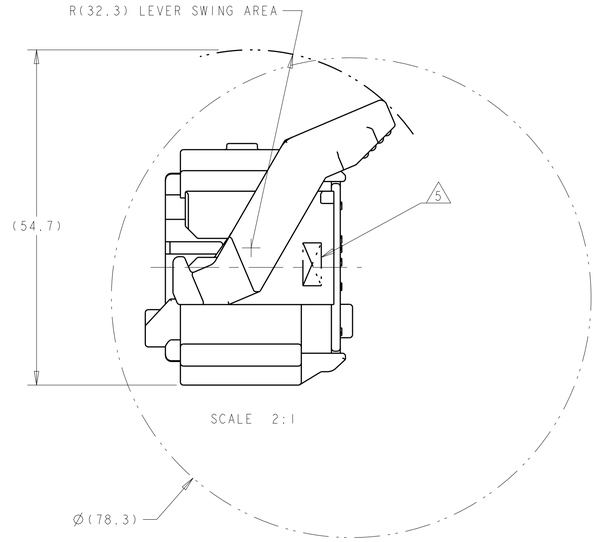

MIN. FEED THRU
CONDITION WITH 1mm
CLEARANCE ALL AROUND
SHOWN WITH SPACER IN SEATED POSITION

1. PRINT PART NUMBER (5S4T-14A464-L*-***, 5S4T-14A464-M*-***, 5S4T-14A464-N*-***) AND TRACEBILITY (YY ; 2 DIGIT YEAR, JJJ = JULIAN DATE, HH = 2 DIGIT MILITARY HOUR CODE IN THE LOCATION AT ASSEMBLY. SEE SHEET 3 THRU 7 (-*) PART NUMBERS.
2. APPLICABLE MOLEX (1.5) POWER TERMINAL PART NUMBERS: 33012-0002 TIN 0.50-1.50mm^2
3. CAM LEVER AND SPACER ARE SHIPPED IN THEIR PRE-ASSEMBLED POSITIONS.
4. REFERENCE TE CONNECTIVITY INSTRUCTION SHEET 408-8893.
5. COMPANY LOGO.

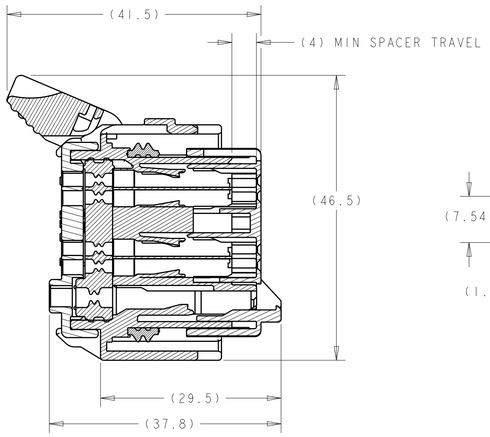

SECTION A-A
SPACER AND LEVER IN
PRE-SEATED POSITION
(DELIVERY CONDITION)

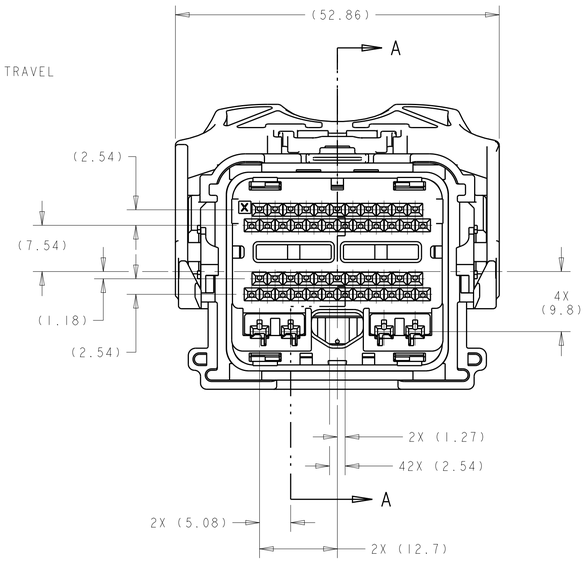

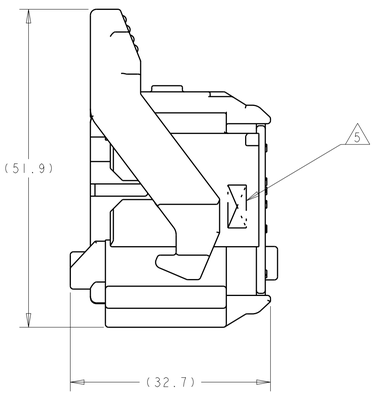

SHOWN WITH CAM
LEVER AND SPACER
IN LOADED POSITION

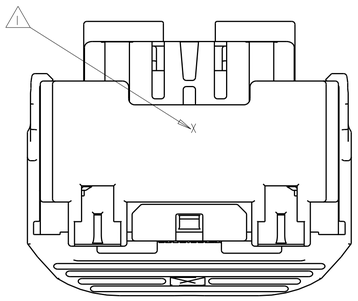

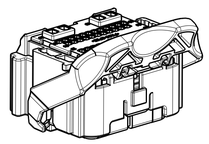

SCALE 1:1

APPLICABLE COMPONENTS (FOR REFERENCE ONLY)

DESCRIPTION	NOMINAL TERMINAL SIZE	COLOR\ PLATING	FORD COMPONENT PART NUMBER	SUPPLIER PART NUMBER	MATERIAL/SPECIFICATION NUMBER	SAE WIRE SIZE
TERMINAL - FEMALE (Ag)	0.64 (CAT. 0)	SILVER	7S4T-14474-AA	1393366-2	COPPER ALLOY/SILVER PLATE	20AWG 18AWG
TERMINAL - FEMALE (Ag)	0.64 (CAT. 0)	SILVER	7S4T-14474-BA	1393367-2	COPPER ALLOY/SILVER PLATE	22AWG
TERMINAL - FEMALE (Sn)	0.64 (CAT. 0)	TIN	1L2T-14474-AA	1393366-1	COPPER ALLOY/TIN PLATE	20AWG 18AWG
TERMINAL - FEMALE (Sn)	0.64 (CAT. 0)	TIN	1L2T-14474-BA	1393367-1	COPPER ALLOY/TIN PLATE	22AWG
TERMINAL - FEMALE (Au)	0.64 (CAT. 0)	GOLD	1L2T-14474-CA	1393365-1	COPPER ALLOY/GOLD PLATE	20AWG 18AWG
TERMINAL - FEMALE (Au)	0.64 (CAT. 0)	GOLD	1L2T-14474-DA	1393364-1	COPPER ALLOY/GOLD PLATE	22AWG

ANY DESIGN CHANGES ON THIS ASSEMBLY MAY ALSO BE REQUIRED ON ASSEMBLY DRAWING 1438691

SEE TABLES
SHEETS 3 THRU 7
PART NUMBER

THIS DRAWING IS A CONTROLLED DOCUMENT.

DIMENSIONS: mm

TOLERANCES UNLESS OTHERWISE SPECIFIED:
0 PLC ±-
1 PLC ±0.3
2 PLC ±0.10
3 PLC ±-
4 PLC ±-
ANGLES ±1°

MATERIAL -
FINISH -

DWN R. VESTAL 15APR2005
CHK T. VALASEK 15APR2005
APVD T. VALASEK 15APR2005
PRODUCT SPEC -
APPLICATION SPEC -
WEIGHT -

TE Connectivity

NAME PCM 50-WAY HARNESS ASSEMBLY

SIZE A1 | CAGE CODE 00779 | DRAWING NO C-1438129 | RESTRICTED TO -

CUSTOMER DRAWING | SCALE 1:1 | SHEET 1 OF 10 | REV F32

4805 (3/13)

THIS DRAWING IS UNPUBLISHED. RELEASED FOR PUBLICATION 20
© COPYRIGHT 20 BY - ALL RIGHTS RESERVED.

REVISIONS

P	LTR	DESCRIPTION	DATE	DWN	APVD
	-	SEE SHEET 1	-	-	-

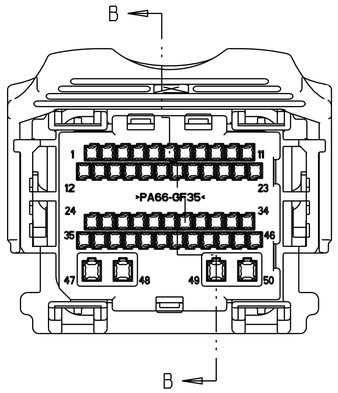

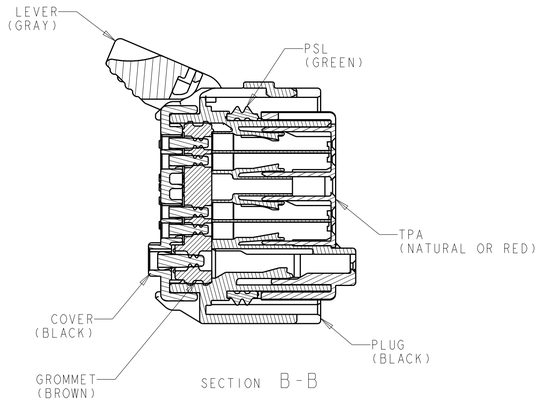

SECTION B-B

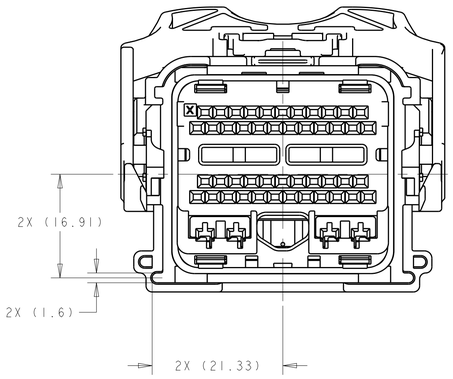

1438129-1
KEYING OPTION "A"

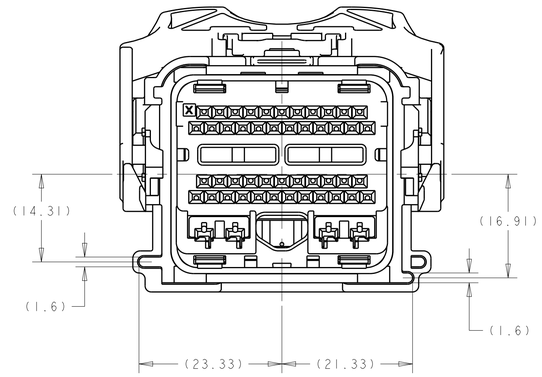

1438129-2
KEYING OPTION "B"

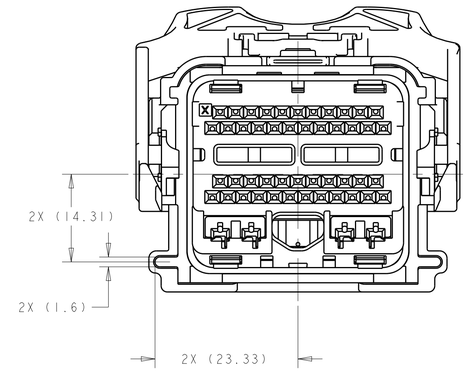

1438129-3
KEYING OPTION "C"

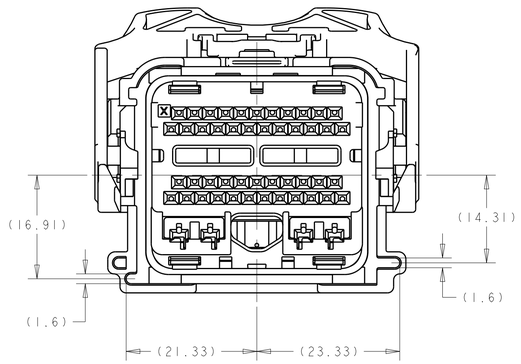

1438129-4
KEYING OPTION "D"

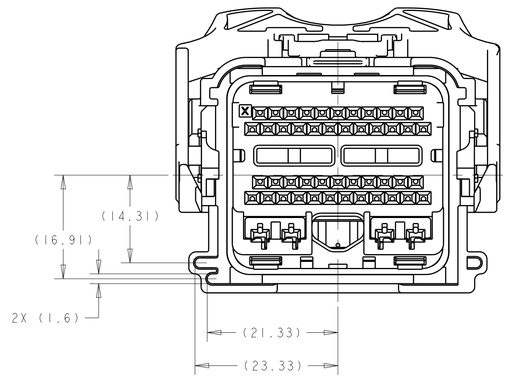

1438129-5
KEYING OPTION "E"

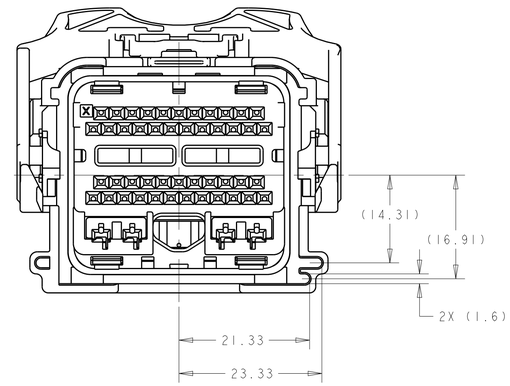

1438129-6
KEYING OPTION "F"

THIS DRAWING IS A CONTROLLED DOCUMENT.

DIMENSIONS: mm

TOLERANCES UNLESS OTHERWISE SPECIFIED:
0 PLC ±-
1 PLC ±0.3
2 PLC ±0.10
3 PLC ±-
4 PLC ±-
ANGLES ±1°

MATERIAL - -
FINISH - -

DWN R. VESTAL 15APR2005
CHK T. VALASEK 15APR2005
APVD T. VALASEK 15APR2005
PRODUCT SPEC -
APPLICATION SPEC -
WEIGHT -

TE Connectivity

NAME PCM 50-WAY HARNESS ASSEMBLY

SIZE	CAGE CODE	DRAWING NO	RESTRICTED TO
A1	00779	C-1438129	-

CUSTOMER DRAWING | SCALE 2:1 | SHEET 2 OF 10 | REV F32

4805 (3/13)

THIS DRAWING IS UNPUBLISHED. RELEASED FOR PUBLICATION 20
© COPYRIGHT 20 BY - ALL RIGHTS RESERVED.

REVISIONS

P	LTR	DESCRIPTION	DATE	DWN	APVD
	-	SEE SHEET 1	-	-	-

KEYING OPTION A

	50	49	48	47	46	45	44	43	42	41	40	39	38	37	36	35	34	33	32	31	30	29	28	27	26	25	24	23	22	21	20	19	18	17	16	15	14	13	12	11	10	9	8	7	6	5	4	3	2	1		
3-1924783-9																																																				5S4T-14A464-LA-999
7-1924783-1	50	49	48	47	46	45	44			41	40				36	35	34	33	32	31				27	26	25			22			19	18	17	16	15		13	12		10		8	7	6	5	4	3	2		5S4T-14A464-LA-036
6-1924783-9												39	38	37	36								28		26	25		23			20									11	10		8		6	5						5S4T-14A464-LA-035
6-1924783-5	50	49	48	47	46	45	44			41	40		38		36		34	33		31		29		27	26	25	24		22		20			17				13	12		10			7	6	5	4	3			5S4T-14A464-LA-034
5-1924783-7		49		47											36				32					27	26	25		23	22	21		19	18					13		11		9	8	7	6	5			2		5S4T-14A464-LA-033
5-1924783-6			48												36				32		30					25		23	22	21		19						13		11		9	8	7	6	5			2		5S4T-14A464-LA-032
5-1924783-0	50	49		47	46	45	44			41	40		38		36		34	33		31		29		27	26	25	24		22		20			17				13	12					7	6		4	3	2		5S4T-14A464-LA-031
4-1924783-6	50	49	48	47	46	45	44			41	40	39	38		36		34	33		31		29		27	26	25	24		22		20			17				13	12		10			7	6	5	4	3	2		5S4T-14A464-LA-030
4-1924783-2							44																																						6							5S4T-14A464-LA-029
2-1924783-9	50	49	48	47	46	45	44			41	40		38		36		34	33		31		29		27	26	25	24		22		20			17				13	12		10			7	6	5	4	3	2		5S4T-14A464-LA-028
2-1924783-3	50	49	48	47	46	45	44			41	40		38		36		34	33		31		29		27	26	25	24				20			17							10						5	4	3	2		5S4T-14A464-LA-027
1-1924783-5	50	49	48	47	46	45		43		41	40		38		36		34	33	32	31				27	26	25	24				20	19	18	17		15			12		10						5	4	3	2	1	5S4T-14A464-LA-026
1924783-9	50	49	48	47	46	45	44	43		41	40		38		36		34	33	32	31				27	26	25	24				20	19	18	17		15			12		10		8				5	4	3	2	1	5S4T-14A464-LA-025
1924783-6	50	49	48	47	46	45	44	43		41	40		38		36		34	33	32	31				27	26	25	24				20	19	18	17		15			12		10		8		6	5	4	3		1	5S4T-14A464-LA-024
1924783-4								43	42	41	40	39					34	33	32	31	30	29	28							21	20	19	18	17	16	15							9	8	7	6	5	4				5S4T-14A464-LA-023
3-1438950-2	50	49	48		46		44		42					37	36		34	33		31	30				26	25	24	23	22	21					16			13	12	11	10	9	8	7	6	5	4		2	1	5S4T-14A464-LA-022
2-1438950-3					46		44	43				39	38		36					31		29	28			25			22	21			18	17					13		11											5S4T-14A464-LA-021
2-1438950-2					46		44	43				39	38		36					31		29	28			25			22	21			18	17					13		11										2	5S4T-14A464-LA-020
1-1438950-9					46		44	43				39	38		36					31			28			25			22	21			18	17					13		11										2	5S4T-14A464-LA-019
1438950-6			48	47	46		44	43	42			39			36							29	28	27	26				22	21			18	17	16				13		11	10	9	8	7	6						5S4T-14A464-LA-018
9-1438129-8					46			43	42									33						27												15		13		11	10												5S4T-14A464-LA-017
8-1438129-9					46		44	43				39	38		36					31						25			22	21			18	17					13		11										2	5S4T-14A464-LA-016
8-1438129-5					46																		28	27					22	21				17	16	15			13														5S4T-14A464-LA-015
8-1438129-3					46		44	43	42			39	38		36					31						25			22	21			18	17					13		11											5S4T-14A464-LA-014
7-1438129-8					46		44	43	42										32				28	27	26			23	22	21	20			17	16											6						5S4T-14A464-LA-013
7-1438129-7					46		44	43	42						36			33	32				28	27	26			23	22	21	20			17	16		14										6						5S4T-14A464-LA-012
6-1438129-3					46		44	43				39	38		36					31						25			22	21			18	17					13		11											5S4T-14A464-LA-011
6-1438129-0	50						44	43	42			39	38		36					31						25			22	21			18	17					13		11											5S4T-14A464-LA-010
4-1438129-6					46																		28	27	26				22	21				17	16	15			13														5S4T-14A464-LA-009
3-1438129-7							44	43				39	38		36					31						25			22	21			18	17					13		11											5S4T-14A464-LA-008
3-1438129-6	50		48	47	46		44	43	42				38		36					31		29		27	26				22	21			18	17		15	14	13														5S4T-14A464-LA-007
3-1438129-5					46			43	42			39	38			35		33					28	27	26				22					17	16	15			13		11	10											5S4T-14A464-LA-006
2-1438129-4	50		48	47	46			43	42				38		36					31		29		27	26				22	21						15		13														5S4T-14A464-LA-005
2-1438129-0	50			47	46			43	42				38					33	32	31		29									20		18	17			14			11	10	9	8		6						5S4T-14A464-LA-004
1438129-8					46			43	42									33					28	27					22					17	16	15					11	10											5S4T-14A464-LA-003
1438129-7					46			43	42			39	38			35		33					28	27					22					17	16	15			13		11	10											5S4T-14A464-LA-002
1-1438129-9					46										36								28	27	26									17	16	15	14	13															5S4T-14A464-LA-001
1438129-1																																																				5S4T-14A464-LA-000
TERMINAL HOLE POSITION	50	49	48	47	46	45	44	43	42	41	40	39	38	37	36	35	34	33	32	31	30	29	28	27	26	25	24	23	22	21	20	19	18	17	16	15	14	13	12	11	10	9	8	7	6	5	4	3	2	1	ASSEMBLY PART NUMBER	FORD PART NUMBER

CAVITIES WITH A NUMERIC SYMBOL INDICATES CLOSED TERMINAL LOCATIONS

BLANK CAVITIES INDICATES OPEN TERMINAL HOLE LOCATIONS

5S4T-14A464-L* PIN-OUT CHART

THIS DRAWING IS A CONTROLLED DOCUMENT.

DIMENSIONS: mm

TOLERANCES UNLESS OTHERWISE SPECIFIED:
0 PLC ±-
1 PLC ±0.3
2 PLC ±0.10
3 PLC ±-
4 PLC ±-
ANGLES ±1°

MATERIAL - -
FINISH - -

DWN R. VESTAL 15APR2005
CHK T. VALASEK 15APR2005
APVD T. VALASEK 15APR2005
PRODUCT SPEC -
APPLICATION SPEC -
WEIGHT -

TE Connectivity

NAME PCM 50-WAY HARNESS ASSEMBLY

SIZE A1 | CAGE CODE 00779 | DRAWING NO C-1438129 | RESTRICTED TO -

CUSTOMER DRAWING | SCALE 1:1 | SHEET 3 OF 10 | REV F32

4805 (3/13)

THIS DRAWING IS UNPUBLISHED. RELEASED FOR PUBLICATION 20
© COPYRIGHT 20 BY - ALL RIGHTS RESERVED.

REVISIONS

P	LTR	DESCRIPTION	DATE	DWN	APVD
	-	SEE SHEET 1	-	-	-

KEYING OPTION B

	50	49	48	47	46	45	44	43	42	41	40	39	38	37	36	35	34	33	32	31	30	29	28	27	26	25	24	23	22	21	20	19	18	17	16	15	14	13	12	11	10	9	8	7	6	5	4	3	2	1			
					46			43	42													29		27	26	25	24		22													9		7						1	5-1438950-9	5S4T-14A464-MA-065
					46																		28	27														13				9								1	5-1438950-5	5S4T-14A464-MA-064
					46			43				39	38	37			34		32	31		29					24		22		20					15	14														5-1438950-4	5S4T-14A464-MA-063
					46			43				39		37			34		32	31		29					24		22		20					15															5-1438950-3	5S4T-14A464-MA-062
								43				39		37			34		32	31		29									20					15															5-1438950-2	5S4T-14A464-MA-061
					46			43				39		37			34		32	31		29					24		22							15													2		5-1438950-1	5S4T-14A464-MA-060
					46			43				39	38	37			34		32	31		29					24		22							15	14												2		5-1438950-0	5S4T-14A464-MA-059
								43				39		37			34		32	31		29														15															4-1438950-9	5S4T-14A464-MA-058
								43				39		37			34		32	31	30	29									20	19				15															4-1438950-8	5S4T-14A464-MA-057
									42											31															15	14							7				3	2	1	4-1438950-7	5S4T-14A464-MA-056
					46			43	42			39	38	37				33		31				27		25			22				18		16							8	7					2		4-1438950-3	5S4T-14A464-MA-055
					46						40							33			30	29	28				24		22			19	18	17	16	15	14	13				9		7	6	5				4-1438950-2	5S4T-14A464-MA-054
					46							39		37			34		32	31		29					24		22							15															4-1438950-0	5S4T-14A464-MA-053
					46							39	38	37			34		32	31		29					24		22							15	14														3-1438950-9	5S4T-14A464-MA-052
					46			43				39	38	37				33						27		25			22				18		16							8	7							3-1438950-6	5S4T-14A464-MA-051
																		33	32					27													13				9						3		1	3-1438950-4	5S4T-14A464-MA-050
					46				42					37				33		31	30	29	28				24		22			19	18	17	16		14							6	5	4				3-1438950-0	5S4T-14A464-MA-049
					46				42					37				33		31	30	29	28				24		22			19	18	17	16		14							7	6	5	4			2-1438950-9	5S4T-14A464-MA-048
50					46				42					37				33		31	30	29	28	27			24		22			19	18	17	16		14							7	6	5	4			2-1438950-8	5S4T-14A464-MA-047
								43					38											27		25			22				18		16														1	2-1438950-7	5S4T-14A464-MA-046
50	49										40	39	38	37	36	35		33	32	31	30				26				22	21	20	19	18				14	13	12		10	9	8	7	6	5		2	1	2-1438950-6	5S4T-14A464-MA-045
50	49				46	45	44	43	42		40	39	38	37	36	35	34	33	32	31	30	29	28	27	26			23	22		20	19	18	17	16	15	14	13	12	11	10	9	8	7	6	5	4		2	1	2-1438950-5	5S4T-14A464-MA-044
					46			43	42			39	38	37				33	32	31	30		28	27	26	25	24		22		20	19	18	17	16							9			6	5	4				2-1438950-0	5S4T-14A464-MA-043
					46			43	42			39	38	37			34	33	32	31	30		28	27	26	25	24		22		20	19	18	17	16							9			6	5	4				1-1438950-8	5S4T-14A464-MA-042
					46			43	42				38	37			34		32	31	30	29	28	27	26	25	24		22		20	19	18	17	16							9			6	5	4				1-1438950-7	5S4T-14A464-MA-041
								43	42			39	38	37				33	32	31	30		28	27	26	25	24		22		20	19	18	17	16							9			6	5	4				1-1438950-4	5S4T-14A464-MA-040
					46			43	42				38	37					32	31	30	29	28	27	26	25	24		22		20	19	18	17	16							9			6	5	4				1-1438950-3	5S4T-14A464-MA-039
					46					41				37				33			30	29	28				24		22			19	18	17	16		14								6	5	4			1	1-1438950-0	5S4T-14A464-MA-038
					46						40							33			30	29	28				24		22			19	18	17	16		14	13				9		7	6	5					1438950-8	5S4T-14A464-MA-037
								43				39						33													20					15															1438950-1	5S4T-14A464-MA-036
								43				39	38				34	33	32												20					15	14															9-1438129-9	5S4T-14A464-MA-035
					46			43				39		37				33				29		27		25			22		20		18		16	15							8							1	9-1438129-7	5S4T-14A464-MA-034
					46			43	42				38	37					32	31	30		28	27	26	25	24		22		20	19	18	17	16							9			6	5	4				9-1438129-5	5S4T-14A464-MA-033
									42			39	38	37				33				29							22				18		16	15	14						8						2	1	9-1438129-4	5S4T-14A464-MA-032
									42			39	38				34	33	32	31				27	26	25					20													7						9-1438129-3	5S4T-14A464-MA-031
					46							39		37			34		32	31		29					24		22							15													2	9-1438129-2	5S4T-14A464-MA-030
					46							39	38	37			34		32	31		29					24		22							15	14												2	9-1438129-1	5S4T-14A464-MA-029
					46				42			39		37			34	33	32	31		29			26		24		22							15						9		7					2		9-1438129-0	5S4T-14A464-MA-028
												39	38	37				33				29											18		16	15	14						8							1	8-1438129-8	5S4T-14A464-MA-027
					46																		28	27														13												1	8-1438129-0	5S4T-14A464-MA-026
					46			43	42	41	40	39	38	37			34			31	30	29	28	27	26	25			22			19				15	14	13				9						3	2	1	7-1438129-9	5S4T-14A464-MA-025
					46				42			39	38	37			34	33	32	31		29			26		24		22							15	14					9		7					2		7-1438129-5	5S4T-14A464-MA-024
												39		37			34		32	31	30	29									20	19				15															7-1438129-4	5S4T-14A464-MA-023
									42			39	38				34	33	32	31					26	25					20													7						7-1438129-3	5S4T-14A464-MA-022
								43	42	41	40	39	38	37				33		31	30			27	26		24				20	19				15	14	13				9		7				3			7-1438129-1	5S4T-14A464-MA-021
								43				39		37				33		31				27			24									15															7-1438129-0	5S4T-14A464-MA-020
								43				39		37			34	33	32	31																15															6-1438129-9	5S4T-14A464-MA-019
									42			39	38				34	33	32	31					26	25					20		18											7						6-1438129-5	5S4T-14A464-MA-018
					46				42			39	38	37			34	33	32	31		29			26				22							15	14					9		7							6-1438129-2	5S4T-14A464-MA-017
												39		37			34		32	31		29														15															6-1438129-1	5S4T-14A464-MA-016
									42			39																	22				18		16		14												2	1	5-1438129-3	5S4T-14A464-MA-015
												39																					18		16		14													1	5-1438129-2	5S4T-14A464-MA-014
												39	38	37				33				29											18		16		14						8							1	5-1438129-0	5S4T-14A464-MA-013
												39	38					33				29		27							20		18		16		14						8				3		1	4-1438129-9	5S4T-14A464-MA-012
					46							39	38					33				29							22				18																		4-1438129-8	5S4T-14A464-MA-011
					46					41		39	38	37			34		32			29				25			22				18		16	15	14				9								1	4-1438129-0	5S4T-14A464-MA-010
																																					14													3-1438129-8	5S4T-14A464-MA-009
					46					41		39	38	37			34		32			29			26	25			22				18		16	15	14				9								1	3-1438129-4	5S4T-14A464-MA-008
					46							39	38	37			34		32			29			26	25	24		22				18		16	15	14				9								1	3-1438129-2	5S4T-14A464-MA-007
	50				46									37				33			30	29	28	27			24		22			19	18		16		14							7	6	5	4			1	2-1438129-6	5S4T-14A464-MA-006
					46									37				33			30	29	28				24		22			19	18		16		14							7	6	5	4			1	2-1438129-5	5S4T-14A464-MA-005
	50				46							39	38					33				29							22				18																	1	1-1438129-1	5S4T-14A464-MA-004
																																	18																	1	1-1438129-0	5S4T-14A464-MA-003
												39	38									29		27			24				20		18		16		14						8				3		1	1438129-9	5S4T-14A464-MA-002
					46					41	40			37				33			30	29	28				24					19	18	17	16		14								6	5	4			1	2-1438129-1	5S4T-14A464-MA-001
																																																		1438129-2	5S4T-14A464-MA-000
TERMINAL HOLE POSITION	50	49	48	47	46	45	44	43	42	41	40	39	38	37	36	35	34	33	32	31	30	29	28	27	26	25	24	23	22	21	20	19	18	17	16	15	14	13	12	11	10	9	8	7	6	5	4	3	2	1	ASSEMBLY PART NUMBER	FORD PART NUMBER

CAVITIES WITH A NUMERIC SYMBOL INDICATES CLOSED TERMINAL LOCATIONS

BLANK CAVITIES INDICATES OPEN TERMINAL HOLE LOCATIONS

5S4T-14A464-M* PIN-OUT CHART

THIS DRAWING IS A CONTROLLED DOCUMENT.

DIMENSIONS: mm

TOLERANCES UNLESS OTHERWISE SPECIFIED:
0 PLC ±-
1 PLC ±0.3
2 PLC ±0.10
3 PLC ±-
4 PLC ±-
ANGLES ±1°

MATERIAL - -
FINISH - -

DWN R. VESTAL 15APR2005
CHK T. VALASEK 15APR2005
APVD T. VALASEK 15APR2005
PRODUCT SPEC -
APPLICATION SPEC -
WEIGHT -

TE Connectivity

NAME PCM 50-WAY HARNESS ASSEMBLY

SIZE A1 | CAGE CODE 00779 | DRAWING NO C-1438129 | RESTRICTED TO -

CUSTOMER DRAWING | SCALE 1:1 | SHEET 4 OF 10 | REV F32

4805 (3/13)

THIS DRAWING IS UNPUBLISHED. RELEASED FOR PUBLICATION 20
© COPYRIGHT 20 BY - ALL RIGHTS RESERVED.

REVISIONS

P	LTR	DESCRIPTION	DATE	DWN	APVD
	-	SEE SHEET 1	-	-	-

KEYING OPTION B

	50	49	48	47	46	45	44	43	42	41	40	39	38	37	36	35	34	33	32	31	30	29	28	27	26	25	24	23	22	21	20	19	18	17	16	15	14	13	12	11	10	9	8	7	6	5	4	3	2	1		
					46			43	42	41	40		38	37			34	33	32	31	30	29	28	27	26	25	24				20	19		17	16	15	14	13				9	8	7	6	5	4			1	6-1924783-8	5S4T-14A464-MA-094
					46			43		41	40	39	38	37			34	33	32	31	30	29	28	27	26	25	24		22		20	19		17	16	15	14					9	8	7		5	4		2	1	6-1924783-3	5S4T-14A464-MA-093
																		33	32					27																		9						3		1	4-1924783-3	5S4T-14A464-MA-092
									42		40	39					34	33	32			29			26						20					15		13				9		7				3			2-1924783-4	5S4T-14A464-MA-091
					46			43	42			39					34	33	32			29			26	25			22							15	14					9		7						1	2-1924783-2	5S4T-14A464-MA-090
									42			39					34	33		31				27		25			22		20																					1-1924783-9	5S4T-14A464-MA-089
									42			39					34	33		31						25			22		20																					1-1924783-8	5S4T-14A464-MA-088
					46			43	42			39					34	33	32			29			26	25			22							15	14					9		7							1-1924783-4	5S4T-14A464-MA-087
								43				39					34	33	32			29														15	14														1-1924783-3	5S4T-14A464-MA-086
								43		41	40	39	38	37			34		32	31		29									20					15	14	13										3			1-1924783-2	5S4T-14A464-MA-085
								43	42				38							31		29		27		25			22		20		18		16	15														1	1924783-8	5S4T-14A464-MA-084
								43	42				38							31				27		25			22		20		18		16	15														1	1924783-7	5S4T-14A464-MA-083
								43	42				38							31		29		27		25			22				18		16	15														1	1924783-3	5S4T-14A464-MA-082
								43	42				38							31				27		25			22				18		16	15														1	1924783-2	5S4T-14A464-MA-081
					46																		28	27																		9								1	9-1438950-9	5S4T-14A464-MA-080
									42			39					34	33	32	31					26	25					20																					9-1438950-6	5S4T-14A464-MA-079
									42			39					34	33	32	31				27	26	25					20																					9-1438950-5	5S4T-14A464-MA-078
								43									34	33	32			29														15	14															9-1438950-4	5S4T-14A464-MA-077
					46																		28															13				9								1	9-1438950-1	5S4T-14A464-MA-076
					46			43	42			39	38	37				33		31				27		25			22				18		16									7					2		8-1438950-9	5S4T-14A464-MA-075
					46			43				39	38	37				33						27		25			22				18		16									7							8-1438950-8	5S4T-14A464-MA-074
						45	44				40	39	38	37	36	35	34	33	32	31	30		28	27	26	25	24	23		21	20	19	18	17	16			13			10	9	8	7	6	5	4	3	2	1	8-1438950-7	5S4T-14A464-MA-073
								43				39	38					33			30										20	19				15	14	13													7-1438950-7	5S4T-14A464-MA-072
								43				39						33			30										20	19				15		13														7-1438950-5	5S4T-14A464-MA-071
								43				39					34	33	32												20					15																7-1438950-4	5S4T-14A464-MA-070
CAVITIES WITH A NUMERIC SYMBOL INDICATES CLOSED TERMINAL LOCATIONS									42	41	40	39	38				34	33	32			29			26						20					15	14	13				9		7				3			6-1438950-9	5S4T-14A464-MA-069
								43					38									29		27		25			22				18		16														1	6-1438950-5	5S4T-14A464-MA-068
BLANK CAVITIES INDICATES OPEN TERMINAL HOLE LOCATIONS	50				46				42					37				33		31	30	29	28	27			24		22			19	18	17	16		14							6	5					6-1438950-4	5S4T-14A464-MA-067
					46				42					37				33		31	30	29	28				24		22			19	18	17	16		14							6	5					6-1438950-3	5S4T-14A464-MA-066
TERMINAL HOLE POSITION	50	49	48	47	46	45	44	43	42	41	40	39	38	37	36	35	34	33	32	31	30	29	28	27	26	25	24	23	22	21	20	19	18	17	16	15	14	13	12	11	10	9	8	7	6	5	4	3	2	1		

5S4T-14A464-M* PIN-OUT CHART

ASSEMBLY PART NUMBER

FORD PART NUMBER

THIS DRAWING IS A CONTROLLED DOCUMENT.

DIMENSIONS: mm

TOLERANCES UNLESS OTHERWISE SPECIFIED:
0 PLC ±-
1 PLC ±0.3
2 PLC ±0.10
3 PLC ±-
4 PLC ±-
ANGLES ±1°

MATERIAL - -

FINISH - -

DWN R. VESTAL 15APR2005
CHK T. VALASEK 15APR2005
APVD T. VALASEK 15APR2005

PRODUCT SPEC -

APPLICATION SPEC -

WEIGHT -

TE Connectivity

NAME PCM 50-WAY HARNESS ASSEMBLY

SIZE A1 | CAGE CODE 00779 | DRAWING NO C-1438129 | RESTRICTED TO -

CUSTOMER DRAWING | SCALE 1:1 | SHEET 5 OF 10 | REV F32

4805 (3/13)

8	7	6	5	4	3	2	1

THIS DRAWING IS UNPUBLISHED. RELEASED FOR PUBLICATION 20
© COPYRIGHT 20 BY - ALL RIGHTS RESERVED.

REVISIONS					
P	LTR	DESCRIPTION	DATE	DWN	APVD
	-	SEE SHEET 1	-	-	-

KEYING OPTION C

	50	49	48	47	46	45	44	43	42	41		39	38	37	36	35		33	32	31	30		28			25	24	23	22	21	20	19				15	14	13	12	11		9	8	7	6	5	4	3		1	5-1438950-8	5S4T-14A464-NA-065
		49	48	47	46				42			39	38		36				32	31			28	27	26	25	24		22	21				17				13	12			9		7	6	5		3	2	1	5-1438950-7	5S4T-14A464-NA-064
		49			46				42			39		37		35	34							27				23	22						16	15			12	11			8	7	6	5		3	2	1	5-1438950-6	5S4T-14A464-NA-063
	50	49				45	44				40		38	37	36	35	34	33	32	31	30				26			23	22	21	20	19	18				14		12	11	10	9	8	7	6	5	4		2	1	4-1438950-6	5S4T-14A464-NA-062
		49	48	47	46				42			39	38		36				32	31			28	27	26		24		22	21				17				13	12			9			6	5		3	2	1	4-1438950-5	5S4T-14A464-NA-061
	50	49	48	47	46	45	44	43	42	41	40	39	38	37	36				32	31			28				24		22	21				17				13	12			9			6	5		3	2	1	4-1438950-4	5S4T-14A464-NA-060
	50	49	48			45					40	39	38	37	36	35		33	32	31	30				26	25		23	22	21	20		18				14	13	12		10		8	7	6	5	4	3	2	1	4-1438950-1	5S4T-14A464-NA-059
	50	49	48	47	46	45	44	43	42	41		39	38	37	36	35		33	32	31	30		28				24	23	22	21	20	19				15	14	13	12	11		9	8		6	5	4	3		1	3-1438950-8	5S4T-14A464-NA-058
		49	48	47	46				42			39	38		36				32	31			28	27	26		24		22	21				17					12			9		7	6	5		3	2	1	3-1438950-7	5S4T-14A464-NA-057
	50	49			46	45	44	43	42		40	39	38	37	36	35	34	33	32	31	30	29	28	27	26			23	22		20	19	18	17	16	15	14	13	12	11	10	9	8	7	6	5	4		2	1	3-1438950-5	5S4T-14A464-NA-056
					46	45		43	42			39		37		35	34		32	31	30	29		27					22		20	19			16	15									6	5		3		1	3-1438950-3	5S4T-14A464-NA-055
	50	49				45	44				40	39	38	37	36	35	34	33	32	31	30		28		26				22	21	20	19	18	17	16		14	13	12		10	9	8	7	6	5		3	2	1	3-1438950-1	5S4T-14A464-NA-054
	50	49			46	45	44	43	42		40	39	38	37	36	35	34	33	32	31	30	29	28	27	26			23	22		20	19		17	16	15	14	13	12	11	10	9	8	7	6	5	4		2	1	2-1438950-4	5S4T-14A464-NA-053
	50	49				45	44				40	39	38	37	36	35	34	33		31	30				26			23	22	21	20	19	18				14	13	12		10	9	8	7	6	5	4		2	1	2-1438950-1	5S4T-14A464-NA-052
	50	49									40	39	38	37	36	35	34	33	32	31	30				26			23	22	21	20	19	18				14	13	12		10	9	8	7	6	5			2	1	1-1438950-6	5S4T-14A464-NA-050
	50	49			46	45	44	43	42		40	39	38	37	36	35	34	33	32	31	30	29	28	27	26			23	22	21	20	19	18	17	16	15	14	13	12	11	10	9	8	7	6	5	4		2	1	1-1438950-5	5S4T-14A464-NA-049
	50	49	48								40	39	38	37	36	35	34	33	32	31	30				26	25		23	22	21	20	19	18				14	13	12		10	9	8	7	6	5			2	1	1-1438950-2	5S4T-14A464-NA-048
	50	49	48		46	45	44	43	42		40	39	38	37	36	35	34	33	32	31	30	29	28	27	26	25		23	22	21	20	19	18	17	16	15	14	13	12	11	10	9	8	7	6	5	4		2	1	1-1438950-1	5S4T-14A464-NA-047
						45	44				40		38	37	36	35	34	33	32	31	30				26				22	21	20		18				14					9	8	7	6	5					1438950-9	5S4T-14A464-NA-051
	50	49	48			45					40	39	38	37	36	35		33	32	31	30				26	25		23	22	21	20		18				14	13	12		10		8			5	4	3	2	1	1438950-7	5S4T-14A464-NA-046
	50	49	48		46		44		42					37	36		34	33		31	30				26	25	24	23	22	21					16			13	12	11	10	9	8	7	6	5	4	3	2	1	1438950-5	5S4T-14A464-NA-045
	50	49	48		46		44		42					37	36		34	33		31	30				26	25	24	23	22	21					16			13	12	11	10	9	8	7	6	5	4		2	1	1438950-4	5S4T-14A464-NA-044
	50	49			46	45	44	43	42		40		38	37	36	35	34			31	30		28	27	26			23	22	21	20	19	18	17	16	15	14	13	12	11	10	9	8	7	6	5	4	3	2	1	1438950-3	5S4T-14A464-NA-043
					46	45	44	43	42		40		38	37	36	35	34			31	30		28	27	26				22	21	20		18	17	16		14					9	8	7	6	5					1438950-2	5S4T-14A464-NA-042
	50	49			46	45	44	43	42		40	39	38	37	36	35	34	33		31	30	29	28	27	26			23	22	21	20		18	17	16	15	14	13	12	11	10	9	8	7	6	5	4	3	2	1	9-1438129-6	5S4T-14A464-NA-041
	50			47	46	45	44		42	41	40					35	34	33		31	30	29	28	27	26	25	24	23							16			13		11	10	9	8	7	6	5	4	3	2		8-1438129-7	5S4T-14A464-NA-040
	50	49				45	44				40	39			36	35	34		32	31	30				26			23	22	21	20		18				14	13	12		10	9	8	7	6	5	4		2	1	8-1438129-6	5S4T-14A464-NA-039
	50	49	48	47	46	45	44	43	42	41	40	39	38	37	36	35	34	33	32	31	30	29	28	27	26	25	24	23	22	21	20	19	18	17	16	15	14	13	12	11	10	9	8	7	6	5	4	3	2	1	8-1438129-4	3S4T-14A464-GA
		49			46		44		42			39		37		35	34							27				23	22						16	15		13	12	11			8	7	6	5		3	2	1	8-1438129-2	5S4T-14A464-NA-037
	50	49			46	45	44	43	42		40	39		37	36	35	34	33	32			29	28	27				23	22	21	20	19	18	17	16	15		13	12	11			8	7		5		3	2	1	8-1438129-1	5S4T-14A464-NA-036
	50	49			46	45	44	43	42		40	39	38	37	36	35	34	33	32	31		29	28	27	26			23	22		20	19		17	16	15	14	13	12	11	10	9	8	7	6	5	4		2	1	7-1438129-6	5S4T-14A464-NA-035
					46	45	44	43	42		40		38	37	36	35	34			31	30		28	27	26				22	21			18	17	16		14					9	8	7	6	5					7-1438129-2	5S4T-14A464-NA-034
	50	49				45	44				40	39	38	37	36	35	34	33	32	31	30							23	22	21	20	19	18						12	11	10	9	8	7	6	5	4		2	1	6-1438129-8	5S4T-14A464-NA-033
	50	49				45	44				40	39	38	37	36	35	34	33	32	31	30				26			23	22	21	20	19	18				14		12	11	10	9	8	7	6	5	4		2	1	6-1438129-7	5S4T-14A464-NA-032
					46	45	44	43	42		40		38	37	36	35	34			31	30		28	27	26				22	21			18	17	16		14					9	8	7							6-1438129-6	5S4T-14A464-NA-031
	50	49	48	47		45			42	41	40		38	37	36	35		33	32	31	30				26	25	24			21	20	19	18				14	13	12		10		8		6				2	1	6-1438129-4	5S4T-14A464-NA-030
	50	49									40	39	38	37	36	35		33	32	31	30				26				22	21	20	19	18				14	13	12		10	9	8	7	6	5			2	1	5-1438129-9	5S4T-14A464-NA-029
	50	49			46	45	44	43	42		40	39	38	37	36	35	34	33	32	31	30	29	28	27	26			23	22	21	20		18	17	16	15	14	13	12	11	10	9	8	7	6	5	4	3	2	1	5-1438129-8	5S4T-14A464-NA-028
	50	49			46	45	44	43	42		40	39	38	37	36	35	34	33	32	31	30	29	28	27	26			23	22	21	20	19	18	17	16	15	14	13	12	11	10	9	8	7	6	5	4	3	2	1	5-1438129-7	5S4T-14A464-NA-027
					46	45	44	43	42		40		38	37	36	35	34	33	32	31	30		28	27	26				22	21	20		18	17	16		14					9	8	7	6	5					5-1438129-6	5S4T-14A464-NA-026
			48	47	46	45	44	43	42		40		38	37	36	35	34	33	32	31	30		28	27	26	25	24		22	21	20		18	17	16		14					9	8	7	6	5					5-1438129-5	5S4T-14A464-NA-025
	50	49		47		45			42	41	40		38	37	36	35		33	32	31	30				26	25	24			21	20	19	18				14	13	12		10		8		6				2	1	5-1438129-4	5S4T-14A464-NA-024
	50	49	48	47	46	45	44		42	41	40	39	38	37	36	35	34	33	32	31	30	29	28	27	26	25	24	23			20	19	18	17	16	15		13		11	10	9	8	7	6	5	4	3	2		5-1438129-1	5S4T-14A464-NA-023
	50	49				45	44				40						34								26			23			20		18				14				10	9	8	7	6	5	4		2	1	4-1438129-7	5S4T-14A464-NA-022
	50		48	47		45	44		42	41	40					35	34	33		31	30	29	28	27	26	25	24	23							16			13		11	10					5	4	3	2		4-1438129-5	5S4T-14A464-NA-021
	50	49			46	45	44	43	42		40	39	38	37	36	35		33	32	31	30	29	28	27	26			23	22	21	20	19	18	17	16	15	14	13	12	11	10	9	8	7	6		4	3	2	1	4-1438129-4	5S4T-14A464-NA-020
	50	49	48	47	46	45	44		42	41	40	39	38	37	36	35	34	33	32	31	30	29	28	27	26	25	24	23			20	19		17	16	15	14	13		11	10	9	8	7	6	5	4	3	2		4-1438129-3	5S4T-14A464-NA-019
	50		48	47		45	44		42	41	40					35	34	33		31	30	29	28	27	26	25	24	23							16			13		11	10					5	4	3	2		4-1438129-2	5S4T-14A464-NA-018
	50		48	47		45	44		42	41	40	39	38	37	36	35	34	33	32	31	30	29	28	27	26	25	24	23			20	19		17	16	15	14	13		11	10					5	4	3	2		4-1438129-1	5S4T-14A464-NA-017
	50	49		47		45			42	41	40		38	37	36	35		33	32	31	30				26					21	20	19	18				14	13	12		10		8		6				2	1	3-1438129-9	5S4T-14A464-NA-016
	50	49									40	39	38	37	36	35	34	33	32	31	30				26			23	22	21	20	19					14	13	12	11		9	8	7	6	5					3-1438129-3	5S4T-14A464-NA-015
	50	49			46	45	44	43	42		40	39	38	37	36	35	34	33	32	31		29	28	27	26			23	22		20	19	18	17	16	15	14	13	12	11	10	9	8	7	6	5	4		2	1	3-1438129-1	5S4T-14A464-NA-014
	50	49						43			40	39	38	37	36	35	34	33	32	31	30				26			23	22	21	20	19					14	13	12	11		9	8	7	6	5					3-1438129-0	5S4T-14A464-NA-013
	50	49	48			45	44				40	39	38	37	36	35	34	33	32	31	30		28		26	25			22	21	20	19	18	17	16		14	13	12		10	9	8	7	6	5		3	2	1	2-1438129-9	5S4T-14A464-NA-012
	50	49	48		46	45	44	43	42		40	39	38	37	36	35	34	33	32	31	30	29	28		26	25		23	22	21	20	19	18	17	16	15	14	13	12	11	10	9	8	7	6	5	4		2	1	2-1438129-8	5S4T-14A464-NA-011
	50	49	48			45	44				40	39	38	37	36	35	34	33	32	31	30	29	28		26	25			22	21	20	19	18	17	16		14	13	12	11	10	9	8	7	6	5		3	2	1	2-1438129-7	5S4T-14A464-NA-010
	50	49	48	47		45	44			41	40	39	38	37	36	35	34	33	32	31	30		28		26	25	24		22	21	20	19	18	17	16		14	13	12		10	9	8	7	6	5		3	2	1	2-1438129-3	5S4T-14A464-NA-009
												39	38	37	36	35		33	32	31	30				26				22	21	20	19	18				14	13	12		10	9	8	7	6				2	1	1-1438129-8	5S4T-14A464-NA-008
												39	38	37	36	35		33	32	31	30				26				22	21			18				14	13	12		10				6				2	1	1-1438129-7	5S4T-14A464-NA-007
	50	49										39	38	37	36	35		33	32	31	30				26				22	21	20	19	18				14	13	12		10	9	8	7	6				2	1	1-1438129-6	5S4T-14A464-NA-006
	50			47	46	45	44		42	41	40					35	34	33		31	30	29	28	27	26	25	24	23										13		11	10	9			6	5	4	3	2		1-1438129-5	5S4T-14A464-NA-005
	50			47		45	44		42	41	40					35	34	33		31	30	29	28	27	26	25	24	23							16			13		11	10					5	4	3	2		1-1438129-4	5S4T-14A464-NA-004
CAVITIES WITH A NUMERIC SYMBOL INDICATES CLOSED TERMINAL LOCATIONS	50	49	48	47	46	45	44		42	41	40					35	34	33		31	30	29	28	27	26	25	24	23							16			13		11	10	9	8	7	6	5	4	3	2		1-1438129-3	5S4T-14A464-NA-003
	50	49				45	44	43	42		40	39	38	37	36			33	32	31	30	29	28	27	26			23	22	21	20	19	18	17	16	15	14	13	12	11	10	9	8	7	6		4	3	2	1	1-1438129-2	5S4T-14A464-NA-002
BLANK CAVITIES INDICATES OPEN TERMINAL HOLE LOCATIONS	50	49				45	44			41	40	39	38	37	36	35	34	33	32	31	30		28		26				22	21	20	19	18	17	16		14	13	12		10	9	8	7	6	5		3	2	1	2-1438129-2	5S4T-14A464-NA-001
																																																			1438129-3	5S4T-14A464-NA-000
TERMINAL HOLE POSITION	50	49	48	47	46	45	44	43	42	41	40	39	38	37	36	35	34	33	32	31	30	29	28	27	26	25	24	23	22	21	20	19	18	17	16	15	14	13	12	11	10	9	8	7	6	5	4	3	2	1	ASSEMBLY PART NUMBER	FORD PART NUMBER

5S4T-14A464-N* PIN-OUT CHART

THIS DRAWING IS A CONTROLLED DOCUMENT.

DWN	R. VESTAL	15APR2005
CHK	T. VALASEK	15APR2005
APVD	T. VALASEK	15APR2005

DIMENSIONS: mm

TOLERANCES UNLESS OTHERWISE SPECIFIED:
0 PLC ±-
1 PLC ±0.3
2 PLC ±0.10
3 PLC ±-
4 PLC ±-
ANGLES ±1°

MATERIAL - -
FINISH - -
PRODUCT SPEC -
APPLICATION SPEC -
WEIGHT -

TE Connectivity

NAME: PCM 50-WAY HARNESS ASSEMBLY

SIZE	CAGE CODE	DRAWING NO	RESTRICTED TO
A1	00779	C-1438129	-

CUSTOMER DRAWING

SCALE 1:1 SHEET 6 OF 10 REV F32

4805 (3/13)

THIS DRAWING IS UNPUBLISHED. RELEASED FOR PUBLICATION 20
© COPYRIGHT 20 BY - ALL RIGHTS RESERVED.

REVISIONS					
P	LTR	DESCRIPTION	DATE	DWN	APVD
	-	SEE SHEET 1	-	-	-

KEYING OPTION C

				47					42	41			38	37		35		33	32		30		28	27	26		24	23	22	21	20		18	17		15	14	13	12			9	8	7	6	5	4	3	2		6-1924783-7	5S4T-14A464-NA-131
	50		48		46	45	44	43	42					37	36		34	33	32	31	30					25		23	22		20							13	12	11	10	9	8		6	5			2	1	6-1924783-6	5S4T-14A464-NA-130
	50	49	48	47	46	45	44	43	42	41	40	39	38	37	36	35	34	33	32	31	30	29	28	27		25	24	23	22	21	20	19	18	17	16	15		13	12	11	10	9	8	7	6	5	4	3	2	1	6-1924783-4	5S4T-14A464-NA-129
				47					42				38	37		35		33	32	31			28				24	23	22	21	20		18			15	14	13	12			9	8	7	6	5	4	3	2		6-1924783-2	5S4T-14A464-NA-128
	50		48		46	45	44	43	42	41				37			34	33	32	31	30					25		23	22								14	13	12		10	9	8		6	5		3		1	6-1924783-1	5S4T-14A464-NA-127
			48												36				32	31	30					25		23	22	21		19						13		11		9	8	7	6	5			2		6-1924783-0	5S4T-14A464-NA-126
		49		47											36				32					27		25		23	22	21		19	18					13		11		9	8	7	6	5			2		5-1924783-9	5S4T-14A464-NA-125
			48												36				32		30					25		23	22	21		19						13		11		9	8	7	6	5			2		5-1924783-8	5S4T-14A464-NA-124
			48						42					37	36			33	32	31	30					25		23	22	21		19						13				9	8	7	6	5			2		5-1924783-5	5S4T-14A464-NA-123
				47					42				38	37		35		33	32	31	30		28	27	26		24	23	22	21	20		18	17		15	14	13	12			9	8	7	6	5	4	3	2		5-1924783-4	5S4T-14A464-NA-122
			48	47					42		40		38	37		35		33	32		30		28	27	26		24	23	22	21	20		18	17		15	14	13	12			9	8	7	6	5	4	3	2		5-1924783-3	5S4T-14A464-NA-121
		49		47										37	36			33	32	31				27		25		23	22	21		19	18					13		11		9	8	7	6	5			2		5-1924783-2	5S4T-14A464-NA-120
				47					42				38	37		35		33	32				28				24	23	22	21	20		18			15	14	13	12			9	8	7	6	5	4	3	2		5-1924783-1	5S4T-14A464-NA-119
				47					42			39	38	37		35		33	32	31			28				24	23	22	21	20		18			15	14	13	12			9	8	7	6	5	4	3	2		4-1924783-9	5S4T-14A464-NA-118
		49			46							39				35								27				23	22		20	19			16	15				11			8	7	6	5		3	2		4-1924783-8	5S4T-14A464-NA-117
				47					42			39	38	37		35			32				28				24	23	22	21	20		18			15	14	13	12			9	8	7	6	5	4	3	2		4-1924783-7	5S4T-14A464-NA-116
		49			46							39				35								27				23	22		20	19			16	15				11			8	7	6	5		3	2	1	4-1924783-5	5S4T-14A464-NA-115
					46	45		43				39		37		35				31	30		28	27					22		20	19			16	15								7	6	5		3			4-1924783-4	5S4T-14A464-NA-114
				47					42			39	38	37		35		33	32				28				24	23	22	21	20		18			15	14	13	12			9	8	7	6	5	4	3	2		4-1924783-1	5S4T-14A464-NA-113
				47					42			39	38	37		35	34	33	32				28				24	23	22	21	20		18			15	14	13	12			9	8	7	6	5	4	3	2		4-1924783-0	5S4T-14A464-NA-112
	50			47	46	45	44	43	42			39	38	37		35	34	33	32	31	30		28				24	23	22	21	20	19	18		16	15	14	13	12	11	10	9	8	7	6	5	4	3	2		3-1924783-8	5S4T-14A464-NA-111
	50		48		46	45	44	43	42					37	36		34	33	32	31	30					25		23			20							13	12	11	10	9	8		6	5			2	1	3-1924783-7	5S4T-14A464-NA-110
				47					42				38	37		35		33	32		30		28	27	26		24	23	22	21	20		18	17		15	14	13	12			9	8	7	6	5	4	3	2		3-1924783-6	5S4T-14A464-NA-109
	50		48		46	45	44	43	42	41				37			34	33	32	31	30					25		23	22		20						14	13	12		10	9	8		6	5		3	2	1	3-1924783-5	5S4T-14A464-NA-108
	50			47	46	45	44		42			39	38	37		35	34	33	32	31	30		28				24	23	22	21	20	19	18		16	15	14	13	12	11	10	9	8	7	6	5	4	3	2		3-1924783-4	5S4T-14A464-NA-107
	50	49	48	47	46	45	44	43	42	41		39	38	37	36	35		33	32	31	30	29	28			25	24	23	22	21	20	19				15	14	13	12	11	10	9	8	7	6	5	4	3		1	3-1924783-3	5S4T-14A464-NA-106
		49	48	47	46				42			39	38		36				32	31		29	28	27	26	25	24		22	21				17				13	12		10	9		7	6	5		3	2	1	3-1924783-2	5S4T-14A464-NA-105
	50	49	48	47	46		44	43	42	41		39			36	35	34	33	32	31		29	28			25	24			21	20					15	14	13	12		10	9	8	7	6	5	4	3		1	3-1924783-1	5S4T-14A464-NA-104
			48						42					37	36				32	31	30					25		23	22	21		19						13				9	8	7	6	5			2		3-1924783-0	5S4T-14A464-NA-103
	50		48		46	45	44	43	42	41			38	37	36		34	33	32	31	30					25		23	22		20						14	13	12	11	10	9	8		6	5		3	2	1	2-1924783-8	5S4T-14A464-NA-102
		49		47											36				32	31				27		25		23	22	21		19	18					13		11		9	8	7	6	5			2		2-1924783-7	5S4T-14A464-NA-101
			48											37	36				32	31	30					25		23	22	21		19						13		11		9	8	7	6	5			2		2-1924783-6	5S4T-14A464-NA-100
			48	47	46	45			42		40		38	37	36	35	34	33	32	31	30		28	27	26	25	24		22	21	20		18	17	16		14					9	8	7	6	5					2-1924783-5	5S4T-14A464-NA-099
				47					42				38	37		35			32	31	30		28	27	26		24	23	22	21	20		18	17		15	14	13	12			9	8	7	6	5	4	3	2		2-1924783-1	5S4T-14A464-NA-098
				47					42			39	38	37		35			32		30						24	23	22	21	20		18			15	14	13	12			9	8	7	6	5	4	3	2		2-1924783-0	5S4T-14A464-NA-097
	50		48	47	46	45	44	43		41		39	38	37		35		33	32	31	30		28	27	26	25		23	22		20	19		17		15	14	13	12	11	10		8	7			4		2	1	1-1924783-7	5S4T-14A464-NA-096
					46	45		43				39		37		35			32	31	30	29		27					22		20	19			16	15									6	5		3		1	1-1924783-6	5S4T-14A464-NA-095
		49	48		46								38	37	36							29	28	27	26	25	24	23	22	21	20			17		15		13		11	10	9		7	6	5	4	3	2		1-1924783-1	5S4T-14A464-NA-094
	50		48	47	46	45	44	43		41		39	38	37		35		33	32	31	30		28	27	26	25		23	22		20	19		17		15	14	13		11	10		8	7			4		2	1	1-1924783-0	5S4T-14A464-NA-093
	50		48	47	46	45	44	43		41		39		37		35		33	32	31	30		28	27	26	25		23	22		20	19		17		15	14	13		11	10		8	7			4		2	1	1924783-5	5S4T-14A464-NA-092
	50	49				45	44	43	42		40	39		37	36	35	34	33	32			29	28	27				23	22	21	20	19	18	17	16	15		13	12	11			8	7		5		3	2	1	1924783-1	5S4T-14A464-NA-091
					46	45		43	42			39		37		35	34		32	31	30	29		27					22		20	19			16	15									6	5		3			9-1438950-8	5S4T-14A464-NA-090
	50			47	46	45	44	43	42			39	38	37	36	35	34	33	32	31	30		28	27	26	25	24	23	22	21	20	19	18	17	16	15	14	13	12	11	10	9	8	7	6	5	4	3	2	1	9-1438950-7	5S4T-14A464-NA-089
		49	48		46								38	37	36							29	28	27	26		24	23	22	21	20		18	17	16	15		13		11	10	9			6	5	4	3	2		9-1438950-3	5S4T-14A464-NA-088
		49			46							39		37		35								27				23	22						16	15				11			8	7	6	5		3	2		9-1438950-2	5S4T-14A464-NA-087
	50	49		47	46	45	44	43	42	41		39	38	37	36	35	34	33	32	31	30	29	28	27	26	25	24	23	22	21		19		17		15	14	13	12	11	10	9	8	7	6	5	4	3	2	1	9-1438950-0	5S4T-14A464-NA-086
			48		46	45	44	43	42				38	37	36	35	34	33	32	31	30			27	26	25			22	21	20		18	17	16		14					9	8	7	6	5					8-1438950-6	5S4T-14A464-NA-085
					46	45	44	43	42				38	37	36	35	34	33	32	31	30			27	26				22	21	20		18	17	16		14					9	8	7	6	5					8-1438950-5	5S4T-14A464-NA-084
		49	48		46								38	37	36							29	28	27	26		24	23	22	21	20	19	18	17	16	15		13		11	10	9			6	5	4	3	2		8-1438950-4	5S4T-14A464-NA-083
	50	49		47	46		44	43	42	41		39			36	35	34	33	32	31		29	28			25	24			21						15	14	13	12		10	9	8	7	6	5	4	3		1	8-1438950-3	5S4T-14A464-NA-082
			48	47					42		40		38	37		35			32		30		28	27	26		24	23	22	21	20		18	17		15	14	13	12			9	8	7	6	5	4	3	2		8-1438950-2	5S4T-14A464-NA-081
	50		48	47	46	45	44	43	42		40	39	38	37	36	35	34	33	32	31	30		28			25	24	23	22	21	20	19	18	17	16	15	14	13	12	11	10	9	8	7	6	5	4		2	1	8-1438950-1	5S4T-14A464-NA-080
				47					42				38	37		35			32		30		28	27	26		24	23	22	21	20		18	17		15	14	13	12			9	8	7	6	5	4	3	2		8-1438950-0	5S4T-14A464-NA-079
	50	49	48		46									37	36		34	33		31	30				26	25	24	23	22	21					16			13	12	11	10	9	8	7	6	5	4		2	1	7-1438950-9	5S4T-14A464-NA-078
	50		48	47	46	45	44	43		41		39		37		35		33	32	31	30			27	26	25		23	22		20	19		17		15	14	13		11	10		8	7			4		2	1	7-1438950-8	5S4T-14A464-NA-077
		49	48		46				42			39	38		36				32	31			28	27	26	25	24		22	21				17				13	12		10	9		7	6	5		3	2	1	7-1438950-6	5S4T-14A464-NA-076
	50	49	48	47	46	45			42	41	40	39	38	37	36	35	34	33	32	31	30	29	28	27	26	25	24	23	22	21	20	19	18	17	16	15	14	13	12	11	10	9	8	7	6	5	4	3	2	1	7-1438950-3	5S4T-14A464-NA-075
	50		48	47	46	45	44	43		41		39	38	37		35		33	32	31	30			27	26	25		23	22		20	19		17		15	14	13		11			8	7			4		2	1	7-1438950-2	5S4T-14A464-NA-074
			48	47					42		40		38	37		35			32		30		28	27	26		24	23	22	21	20		18	17		15	14	13	12			9	8		6	5	4	3	2		7-1438950-1	5S4T-14A464-NA-073
				47					42				38	37		35			32		30		28	27	26		24	23	22	21	20		18	17		15	14	13	12			9	8		6	5	4	3	2		7-1438950-0	5S4T-14A464-NA-072
					46	45			42		40		38	37	36	35	34			31	30		28	27	26				22	21	20		18	17	16		14					9	8	7	6	5					6-1438950-8	5S4T-14A464-NA-071
	50	49			46	45			42		40		38	37	36	35	34			31	30	29	28	27	26			23	22	21	20	19	18	17	16	15	14	13	12	11	10	9	8	7	6	5	4	3	2	1	6-1438950-7	5S4T-14A464-NA-070
CAVITIES WITH A NUMERIC SYMBOL INDICATES CLOSED TERMINAL LOCATIONS	50		48	47	46	45	44	43		41		39	38	37		35		33	32	31	30		28	27	26	25		23	22		20	19		17		15	14	13	12	11	10		8	7			4		2	1	6-1438950-6	5S4T-14A464-NA-069
		49	48	47	46				42			39	38		36		34		32	31			28	27	26	25	24		22	21				17				13	12			9		7	6	5		3	2	1	6-1438950-2	5S4T-14A464-NA-068
BLANK CAVITIES INDICATES OPEN TERMINAL HOLE LOCATIONS	50	49	48	47	46	45	44	43	42	41		39	38	37	36	35		33	32	31	30		28			25	24	23	22	21	20	19		17		15	14	13	12	11		9	8	7	6	5	4	3		1	6-1438950-1	5S4T-14A464-NA-067
	50	49	48	47	46	45	44	43	42	41		39	38	37	36	35		33	32	31	30		28				24	23	22	21	20	19		17		15	14	13	12	11		9	8		6	5	4	3		1	6-1438950-0	5S4T-14A464-NA-066
TERMINAL HOLE POSITION	50	49	48	47	46	45	44	43	42	41	40	39	38	37	36	35	34	33	32	31	30	29	28	27	26	25	24	23	22	21	20	19	18	17	16	15	14	13	12	11	10	9	8	7	6	5	4	3	2	1	ASSEMBLY PART NUMBER	FORD PART NUMBER

5S4T-14A464-N* PIN-OUT CHART

THIS DRAWING IS A CONTROLLED DOCUMENT.

DWN R. VESTAL 15APR2005
CHK T. VALASEK 15APR2005
APVD T. VALASEK 15APR2005

DIMENSIONS: mm

TOLERANCES UNLESS OTHERWISE SPECIFIED:
0 PLC ±-
1 PLC ±0.3
2 PLC ±0.10
3 PLC ±-
4 PLC ±-
ANGLES ±1°

PRODUCT SPEC -
APPLICATION SPEC -
WEIGHT -
MATERIAL - -
FINISH - -

TE Connectivity

NAME PCM 50-WAY HARNESS ASSEMBLY

SIZE A1 | CAGE CODE 00779 | DRAWING NO C-1438129 | RESTRICTED TO -

CUSTOMER DRAWING | SCALE 1:1 | SHEET 7 OF 10 | REV F32

4805 (3/13)

THIS DRAWING IS UNPUBLISHED. RELEASED FOR PUBLICATION 20
© COPYRIGHT 20 BY - ALL RIGHTS RESERVED.

REVISIONS					
P	LTR	DESCRIPTION	DATE	DWN	APVD
	-	SEE SHEET 1	-	-	-

D C B A

KEYING OPTION C

CAVITIES WITH A NUMERIC SYMBOL INDICATES CLOSED TERMINAL LOCATIONS																																																				
BLANK CAVITIES INDICATES OPEN TERMINAL HOLE LOCATIONS												39	38	37	36								28		26	25		23			20									11	10		8		6	5					7-1924783-0	5S4T-14A464-NA-132
TERMINAL HOLE POSITION	50	49	48	47	46	45	44	43	42	41	40	39	38	37	36	35	34	33	32	31	30	29	28	27	26	25	24	23	22	21	20	19	18	17	16	15	14	13	12	11	10	9	8	7	6	5	4	3	2	1	ASSEMBLY PART NUMBER	FORD PART NUMBER
5S4T-14A464-N* PIN-OUT CHART																																																				

THIS DRAWING IS A CONTROLLED DOCUMENT.

DIMENSIONS: mm

TOLERANCES UNLESS OTHERWISE SPECIFIED:
0 PLC ±-
1 PLC ±0.3
2 PLC ±0.10
3 PLC ±-
4 PLC ±-
ANGLES ±1°

MATERIAL - -
FINISH - -

DWN R. VESTAL 15APR2005
CHK T. VALASEK 15APR2005
APVD T. VALASEK 15APR2005
PRODUCT SPEC -
APPLICATION SPEC -
WEIGHT -

TE Connectivity

NAME PCM 50-WAY HARNESS ASSEMBLY

SIZE A1 | CAGE CODE 00779 | DRAWING NO C-1438129 | RESTRICTED TO -

CUSTOMER DRAWING | SCALE 1:1 | SHEET 8 OF 10 | REV F32

4805 (3/13)

THIS DRAWING IS UNPUBLISHED. RELEASED FOR PUBLICATION 20
© COPYRIGHT 20 BY - ALL RIGHTS RESERVED.

REVISIONS

P	LTR	DESCRIPTION	DATE	DWN	APVD
	-	SEE SHEET 1	-	-	-

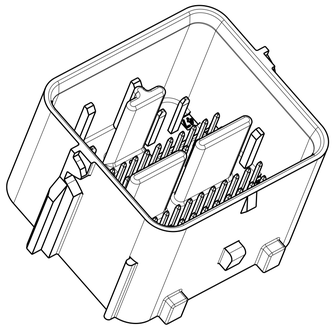

SCALE 2:1

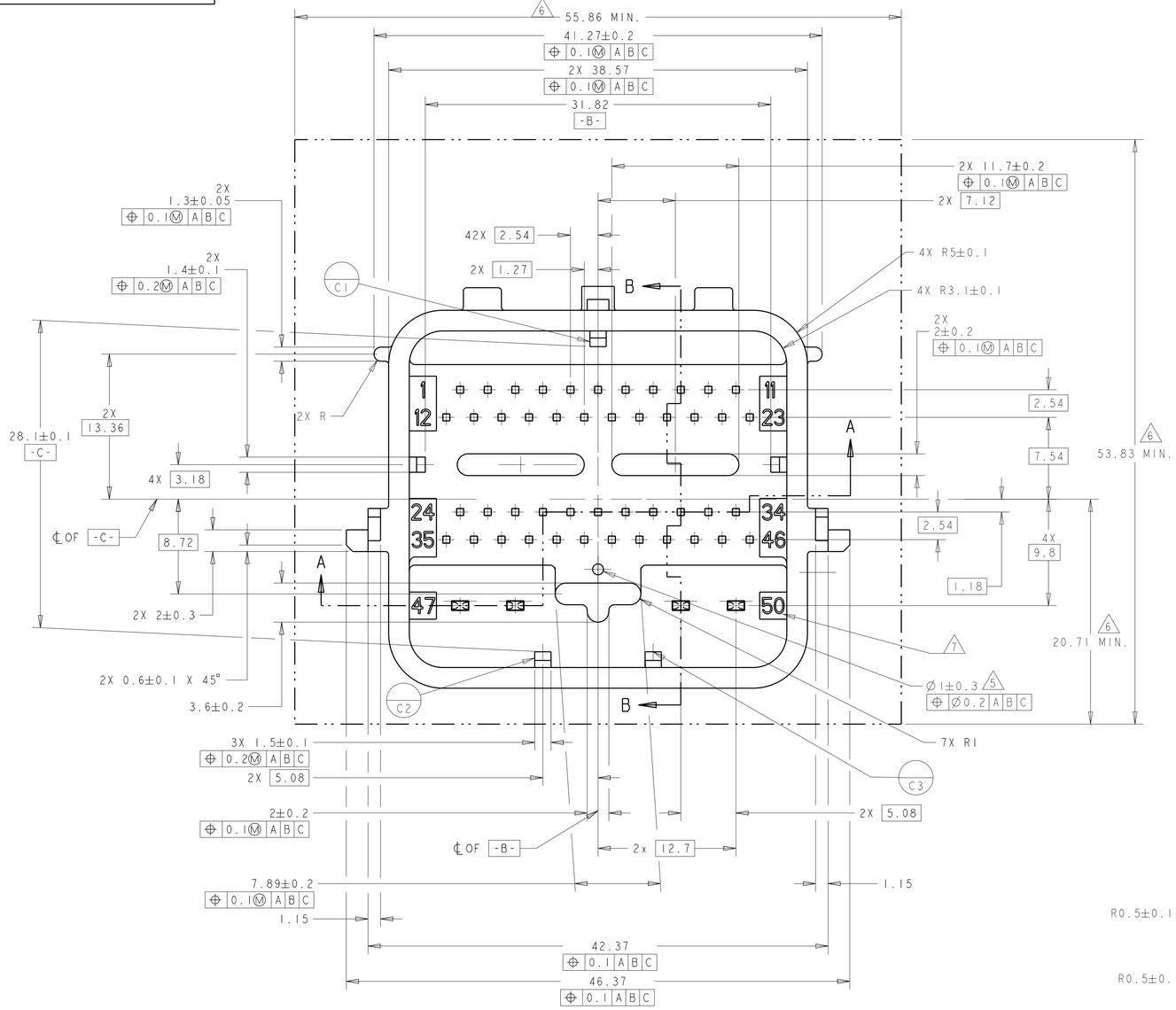

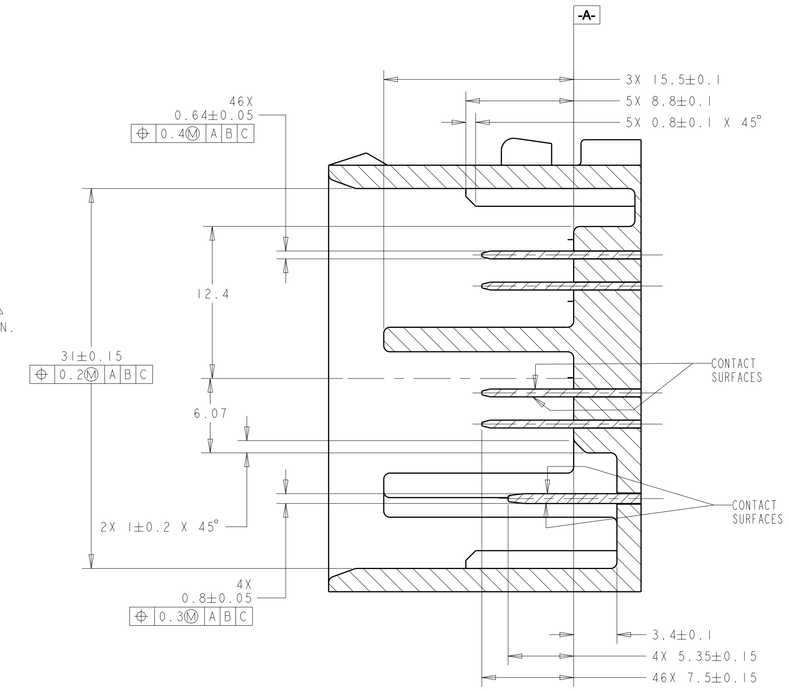

SECTION B-B

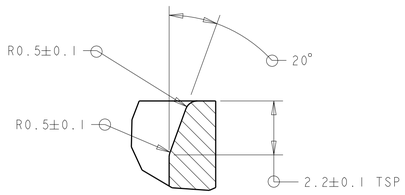

DETAIL E
SCALE 8:1

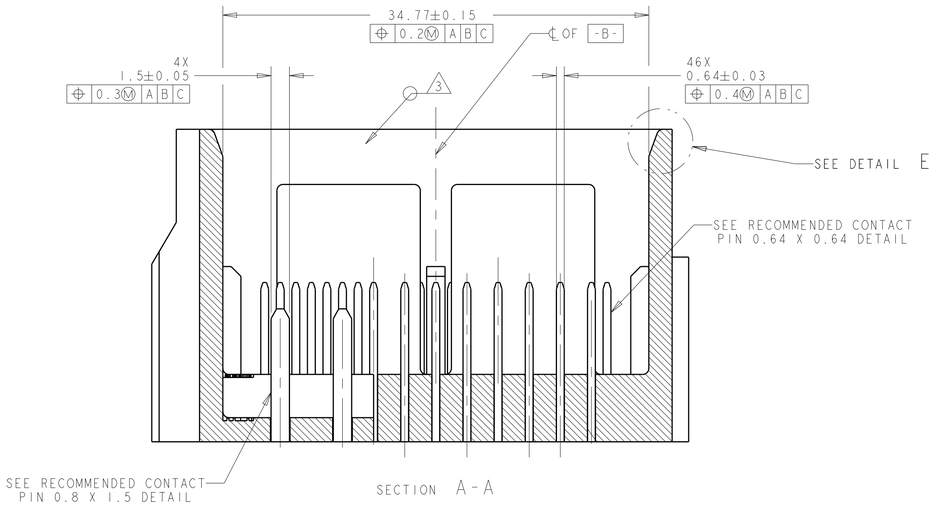

SECTION A-A

NOTES: UNLESS OTHERWISE SPECIFIED

1. GENERAL TOLERANCE:
   ±0.3 ALL ONE PLACE DIMENSIONS
   ±0.10 ALL TWO PLACE DIMENSIONS
   ±1°00′ ALL ANGULAR DIMENSIONS
2. DRAFT ANGLE PERMISSIBLE ONLY WITHIN DRAWING TOLERANCE.
3. SEALING SURFACE, NO WITNESS LINES OR DAMAGE PERMITTED.
4. ALL UNMARKED RADII TO BE 0.5 MAX., UNLESS OTHERWISE SPECIFIED.
5. VENT HOLE SIZE AND LOCATION IS OPTIONAL.
6. THIS AREA TO REMAIN CLEAR FOR THE HARNESS ASSEMBLY.
7. TERMINAL POSITION IDENTIFICATION.
8. MATES WITH TYCO ELECTRONICS PART NUMBERS 1438129-* & 1438950-*

THIS DRAWING IS A CONTROLLED DOCUMENT.

DIMENSIONS: mm

TOLERANCES UNLESS OTHERWISE SPECIFIED:
0 PLC ±-
1 PLC ±0.3
2 PLC ±0.10
3 PLC ±-
4 PLC ±-
ANGLES ±1°

MATERIAL - -
FINISH - -

DWN R. VESTAL 15APR2005
CHK T. VALASEK 15APR2005
APVD T. VALASEK 15APR2005
PRODUCT SPEC -
APPLICATION SPEC -
WEIGHT -

TE Connectivity

NAME PCM 50-WAY HARNESS ASSEMBLY

SIZE	CAGE CODE	DRAWING NO	RESTRICTED TO
A1	00779	C-1438129	-

CUSTOMER DRAWING SCALE 1:1 SHEET 9 OF 10 REV F32

4805 (3/13)

THIS DRAWING IS UNPUBLISHED. RELEASED FOR PUBLICATION 20
© COPYRIGHT 20 BY - ALL RIGHTS RESERVED.

REVISIONS

P	LTR	DESCRIPTION	DATE	DWN	APVD
	-	SEE SHEET 1	-	-	-

HEADER INTERFACE KEYING OPTIONS

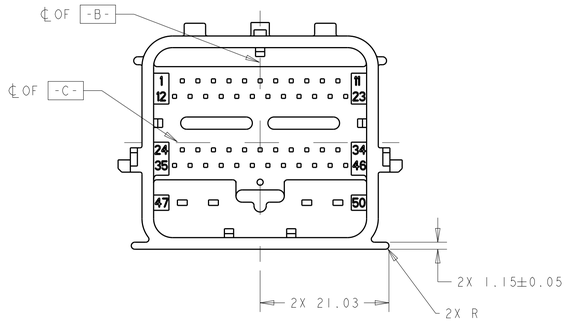

KEYING OPTION "A"
SCALE 2:1

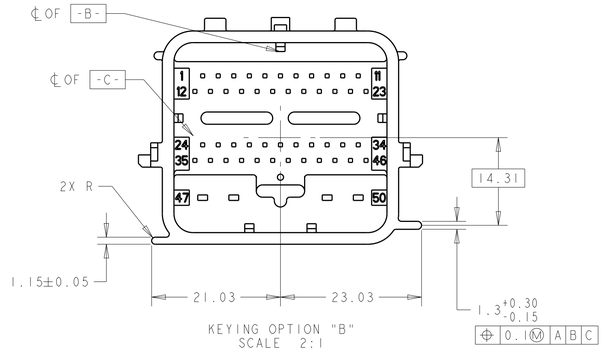

KEYING OPTION "B"
SCALE 2:1

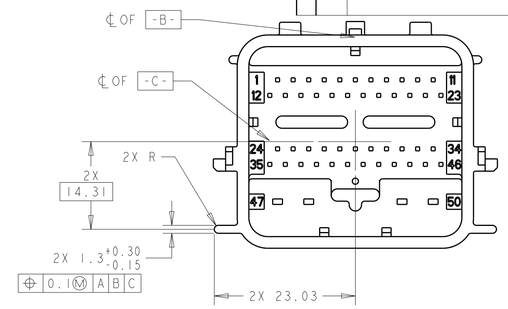

KEYING OPTION "C"
SCALE 2:1

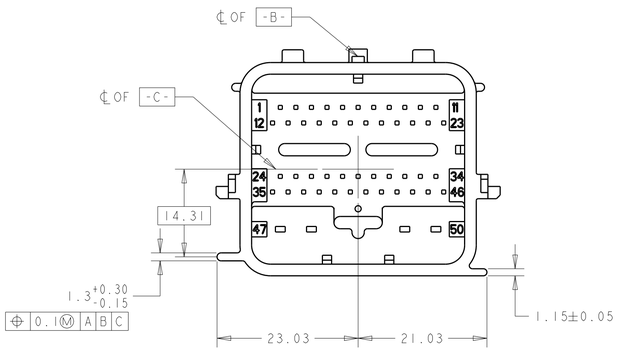

KEYING OPTION "D"
SCALE 2:1

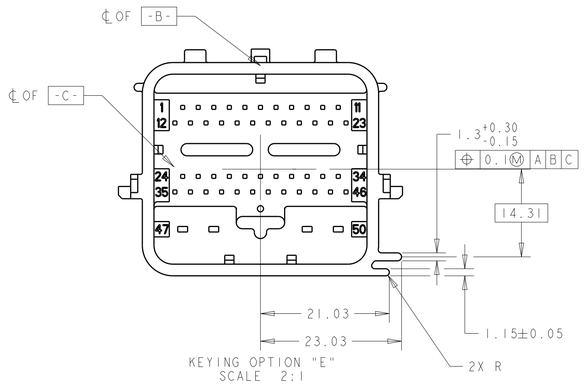

KEYING OPTION "E"
SCALE 2:1

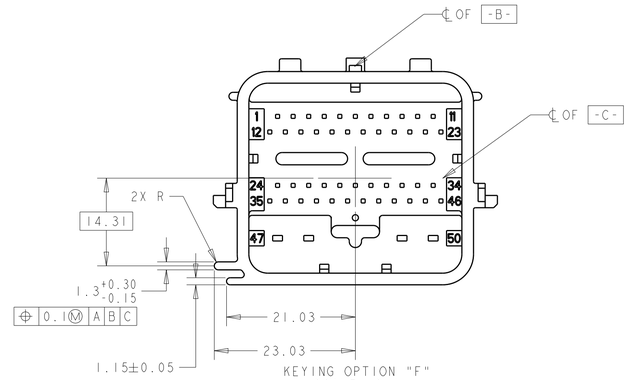

KEYING OPTION "F"
SCALE 2:1

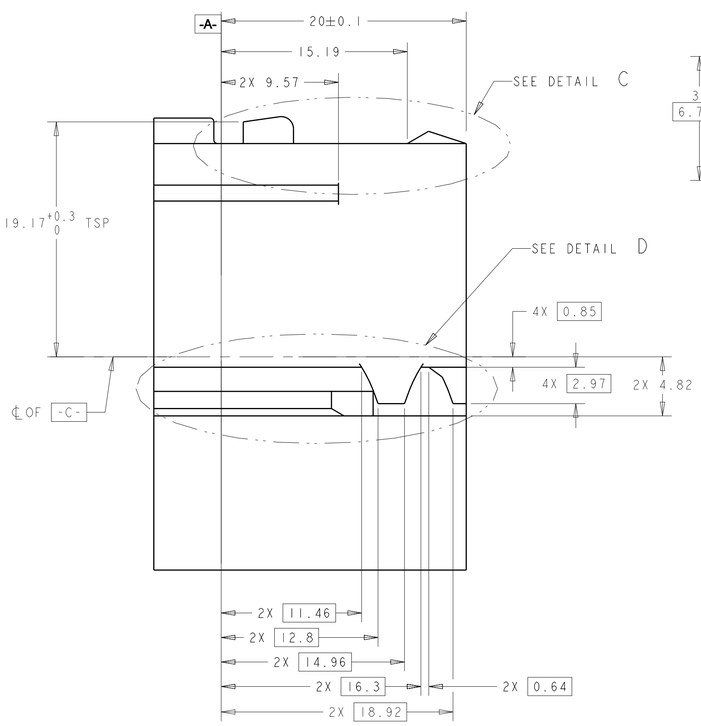

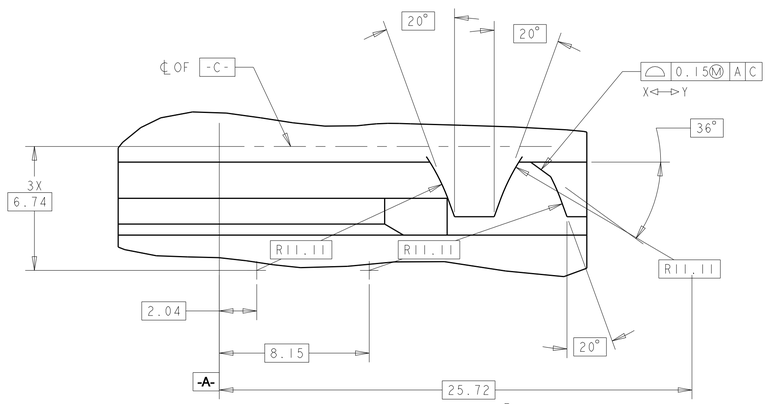

DETAIL D
SCALE 6:1
TYP. 2 PLCS.

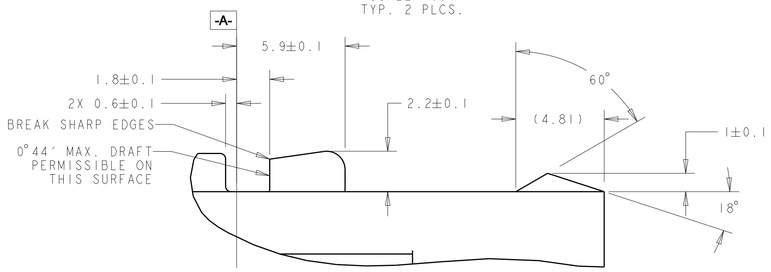

DETAIL C
SCALE 6:1

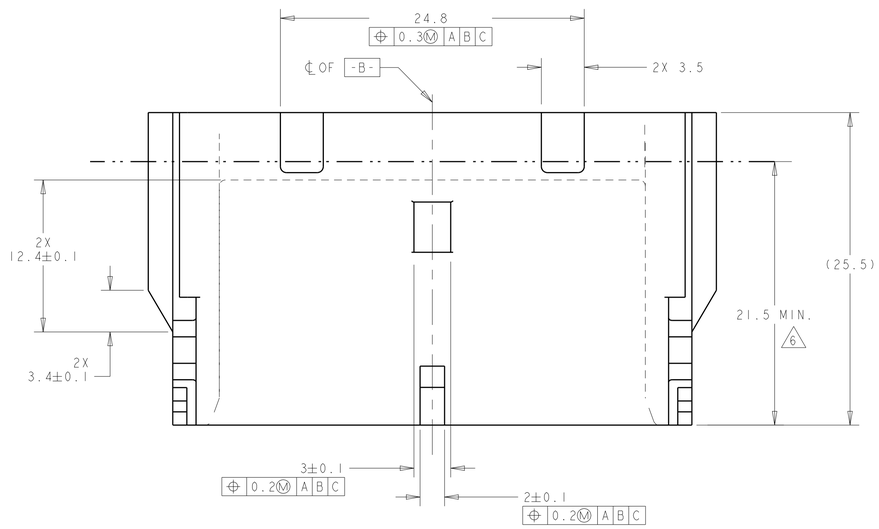

THIS DRAWING IS A CONTROLLED DOCUMENT.	DWN R. VESTAL 15APR2005	TE Connectivity	
DIMENSIONS: mm	CHK T. VALASEK 15APR2005	NAME PCM 50-WAY HARNESS ASSEMBLY	
TOLERANCES UNLESS OTHERWISE SPECIFIED: 0 PLC ±- 1 PLC ±0.3 2 PLC ±0.10 3 PLC ±- 4 PLC ±- ANGLES ±1°	APVD T. VALASEK	PRODUCT SPEC -	
		APPLICATION SPEC -	SIZE A1 / CAGE CODE 00779 / DRAWING NO C-1438129 / RESTRICTED TO -
MATERIAL - -	FINISH - -	WEIGHT -	
		CUSTOMER DRAWING	SCALE 1:1 / SHEET 10 OF 10 / REV F32

4805 (3/13)

OCEAN CHIPS
Океан Электроники
Поставка электронных компонентов

Компания «Океан Электроники» предлагает заключение долгосрочных отношений при поставках импортных электронных компонентов на взаимовыгодных условиях!

Наши преимущества:

- Поставка оригинальных импортных электронных компонентов напрямую с производств Америки, Европы и Азии, а так же с крупнейших складов мира;
- Широкая линейка поставок активных и пассивных импортных электронных компонентов (более 30 млн. наименований);
- Поставка сложных, дефицитных, либо снятых с производства позиций;
- Оперативные сроки поставки под заказ (от 5 рабочих дней);
- Экспресс доставка в любую точку России;
- Помощь Конструкторского Отдела и консультации квалифицированных инженеров;
- Техническая поддержка проекта, помощь в подборе аналогов, поставка прототипов;
- Поставка электронных компонентов под контролем ВП;
- Система менеджмента качества сертифицирована по Международному стандарту ISO 9001;
- При необходимости вся продукция военного и аэрокосмического назначения проходит испытания и сертификацию в лаборатории (по согласованию с заказчиком);
- Поставка специализированных компонентов военного и аэрокосмического уровня качества (Xilinx, Altera, Analog Devices, Intersil, Interpoint, Microsemi, Actel, Aeroflex, Peregrine, VPT, Syfer, Eurofarad, Texas Instruments, MS Kennedy, Miteq, Cobham, E2V, MA-COM, Hittite, Mini-Circuits, General Dynamics и др.);

Компания «Океан Электроники» является официальным дистрибьютором и эксклюзивным представителем в России одного из крупнейших производителей разъемов военного и аэрокосмического назначения **«JONHON»**, а так же официальным дистрибьютором и эксклюзивным представителем в России производителя высокотехнологичных и надежных решений для передачи СВЧ сигналов **«FORSTAR»**.

AVIC JONHON

«JONHON» (основан в 1970 г.)

Разъемы специального, военного и аэрокосмического назначения:

(Применяются в военной, авиационной, аэрокосмической, морской, железнодорожной, горно- и нефтедобывающей отраслях промышленности)

«FORSTAR» (основан в 1998 г.)

ВЧ соединители, коаксиальные кабели, кабельные сборки и микроволновые компоненты:

(Применяются в телекоммуникациях гражданского и специального назначения, в средствах связи, РЛС, а так же военной, авиационной и аэрокосмической отраслях промышленности).

FORSTAR®

Телефон: 8 (812) 309-75-97 (многоканальный)
Факс: 8 (812) 320-03-32
Электронная почта: ocean@oceanchips.ru
Web: http://oceanchips.ru/
Адрес: 198099, г. Санкт-Петербург, ул. Калинина, д. 2, корп. 4, лит. А