TNY253/254/255
TinySwitch™ Family

Energy Efficient, Low Power Off-line Switchers

Product Highlights

Lowest Cost, Low Power Switcher Solution

- Lower cost than RCC, discrete PWM and other integrated/hybrid solutions
- Cost effective replacement for bulky linear adapters
- Lowest component count
- Simple ON/OFF control – no loop compensation devices
- No bias winding – simpler, lower cost transformer
- Allows simple RC type EMI filter for up to 2 W from universal input or 4 W from 115 VAC input

Extremely Energy Efficient

- Consumes only 30/60 mW at 115/230 VAC with no load
- Meets Blue Angel, Energy Star, Energy 2000 and 200 mW European cell phone requirements for standby
- Saves $1 to $4 per year in energy costs (at $0.12/kWHr) compared to bulky linear adapters
- Ideal for cellular phone chargers, standby power supplies for PC, TV and VCR, utility meters, and cordless phones.

High Performance at Low Cost

- High-voltage powered – ideal for charger applications
- Very high loop bandwidth provides excellent transient response and fast turn on with practically no overshoot
- Current limit operation rejects line frequency ripple
- Glitch free output when input is removed
- Built-in current limit and thermal protection
- 44 kHz operation (TNY253/4) with snubber clamp reduces EMI and video noise in TVs and VCRs
- Operates with optocoupler or bias winding feedback

Description

The TinySwitch family uses a breakthrough design to provide the lowest cost, high efficiency, off-line switcher solution in the 0 to 10 W range. These devices integrate a 700 V power MOSFET, oscillator, high-voltage switched current source, current limit and thermal shutdown circuitry. They start-up and run on power derived from the DRAIN voltage, eliminating the need for a transformer bias winding and the associated circuitry. And yet, they consume only about 80 mW at no load, from 265 VAC input. A simple ON/OFF control scheme also eliminates the need for loop compensation.

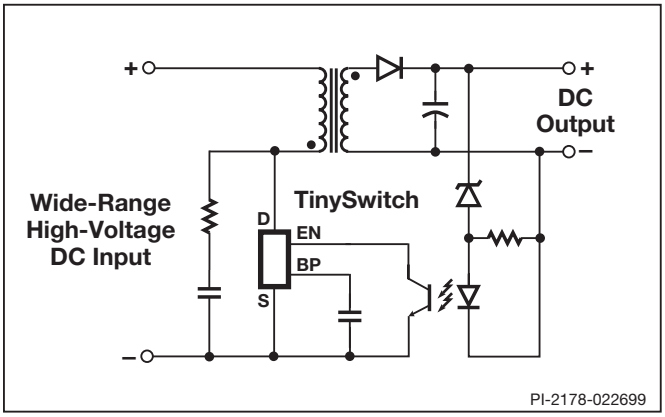

Figure 1. Typical Standby Application.

TinySwitch Selection Guide			
ORDER PART NUMBER	PACKAGE	Recommended Range for Lowest System Cost*	
		230 VAC or 115 VAC w/Doubler	85-265 VAC
TNY253P	DIP-8	0-4 W	0-2 W
TNY253G	SMD-8		
TNY254P	DIP-8	2-5 W	1-4 W
TNY254G	SMD-8		
TNY255P	DIP-8	4-10 W	3.5-6.5 W
TNY255G	SMD-8		

*Table 1. *Please refer to the Key Application Considerations section for details.*

The TNY253 and TNY254 switch at 44 kHz to minimize EMI and to allow a simple snubber clamp to limit DRAIN spike voltage. At the same time, they allow use of low cost EE16 core transformers to deliver up to 5 W. The TNY253 is identical to TNY254 except for its lower current limit, which reduces output short-circuit current for applications under 2.5 W. TNY255 uses higher switching rate of 130 kHz to deliver up to 10 W from the same low cost EE16 core for applications such as PC standby supply. An EE13 or EF13 core with safety spaced bobbin can be used for applications under 2.5 W. Absence of a bias winding eliminates the need for taping/margins in most applications, when triple insulated wire is used for the secondary. This simplifies the transformer construction and reduces cost.

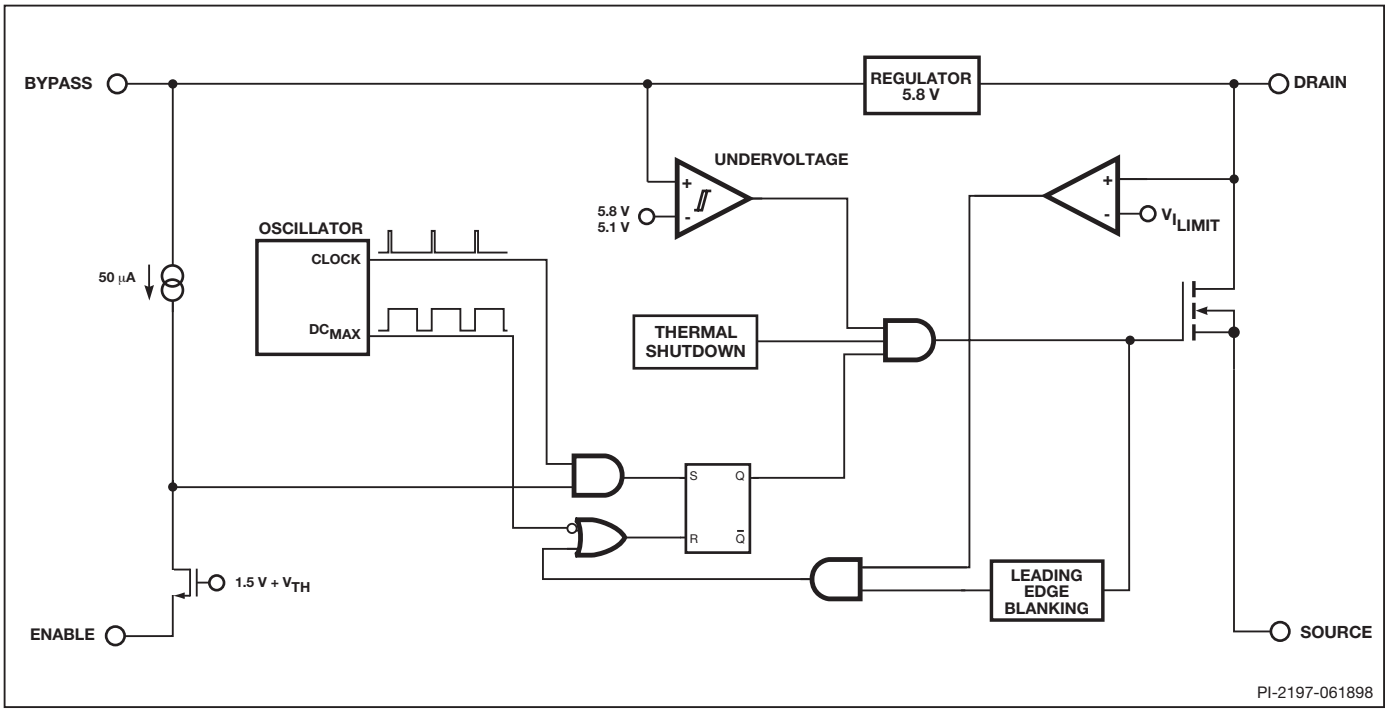

Figure 2. Functional Block Diagram.

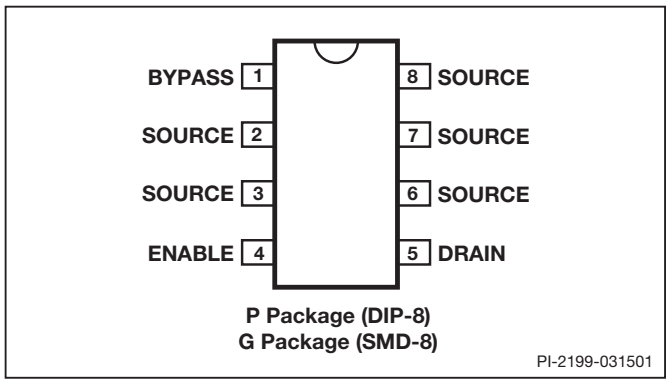

Figure 3. Pin Configuration.

Pin Functional Description

DRAIN (D) Pin:
Power MOSFET drain connection. Provides internal operating current for both start-up and steady-state operation.

BYPASS (BP) Pin:
Connection point for an external bypass capacitor for the internally generated 5.8 V supply. Bypass pin is not intended for sourcing supply current to external circuitry.

ENABLE (EN) Pin:
The power MOSFET switching can be terminated by pulling this pin low. The I-V characteristic of this pin is equivalent to a voltage source of approximately 1.5 V with a source current clamp of 50 µA.

SOURCE (S) Pin:
Power MOSFET source connection. Primary return.

TinySwitch Functional Description

TinySwitch is intended for low power off-line applications. It combines a high-voltage power MOSFET switch with a power supply controller in one device. Unlike a conventional PWM (Pulse Width Modulator) controller, the TinySwitch uses a simple ON/OFF control to regulate the output voltage.

The *TinySwitch* controller consists of an Oscillator, Enable (Sense and Logic) circuit, 5.8 V Regulator, Undervoltage circuit, Hysteretic Over Temperature Protection, Current Limit circuit, Leading Edge Blanking, and a 700 V power MOSFET. Figure 2 shows a functional block diagram with the most important features.

Oscillator
The oscillator frequency is internally set at 44 kHz (130 kHz for the TNY255). The two signals of interest are the Maximum Duty Cycle signal (D_{MAX}) which runs at typically 67% duty cycle and the Clock signal that indicates the beginning of each cycle. When cycles are skipped (see below), the oscillator frequency doubles (except for TNY255 which remains at 130 kHz). This increases the sampling rate at the ENABLE pin for faster loop response.

Enable (Sense and Logic)
The ENABLE pin circuit has a source follower input stage set at 1.5 V. The input current is clamped by a current source set at 50 µA with 10 µA hysteresis. The output of the enable sense

circuit is sampled at the rising edge of the oscillator Clock signal (at the beginning of each cycle). If it is high, then the power MOSFET is turned on (enabled) for that cycle, otherwise the power MOSFET remains in the off state (cycle skipped). Since the sampling is done only once at the beginning of each cycle, any subsequent changes at the ENABLE pin during the cycle are ignored.

5.8 V Regulator

The 5.8 V regulator charges the bypass capacitor connected to the BYPASS pin to 5.8 V by drawing a current from the voltage on the DRAIN, whenever the MOSFET is off. The BYPASS pin is the internal supply voltage node for the TinySwitch. When the MOSFET is on, the TinySwitch runs off of the energy stored in the bypass capacitor. Extremely low power consumption of the internal circuitry allows the TinySwitch to operate continuously from the current drawn from the DRAIN pin. A bypass capacitor value of 0.1 µF is sufficient for both high frequency de-coupling and energy storage.

Undervoltage

The undervoltage circuitry disables the power MOSFET when the BYPASS pin voltage drops below 5.1 V. Once the BYPASS pin voltage drops below 5.1 V, it has to rise back to 5.8 V to enable (turn-on) the power MOSFET.

Hysteretic Over Temperature Protection

The thermal shutdown circuitry senses the die junction temperature. The threshold is set at 135 °C with 70 °C hysteresis. When the junction temperature rises above this threshold (135 °C) the power MOSFET is disabled and remains disabled until the die junction temperature falls by 70 °C, at which point it is re-enabled.

Current Limit

The current limit circuit senses the current in the power MOSFET. When this current exceeds the internal threshold (I_{LIMIT}), the power MOSFET is turned off for the remainder of that cycle.

The leading edge blanking circuit inhibits the current limit comparator for a short time (t_{LEB}) after the power MOSFET is turned on. This leading edge blanking time has been set so that current spikes caused by primary-side capacitance and secondary-side rectifier reverse recovery time will not cause premature termination of the switching pulse.

TinySwitch Operation

TinySwitch is intended to operate in the current limit mode. When enabled, the oscillator turns the power MOSFET on at the beginning of each cycle. The MOSFET is turned off when the current ramps up to the current limit. The maximum on-time of the MOSFET is limited to DC_{MAX} by the oscillator. Since the current limit and frequency of a given TinySwitch device are constant, the power delivered is proportional to the primary inductance of the transformer and is relatively independent of the input voltage. Therefore, the design of the power supply involves calculating the primary inductance of the transformer for the maximum power required. As long as the TinySwitch device chosen is rated for the power level at the lowest input voltage, the calculated inductance will ramp up the current to the current limit before the DC_{MAX} limit is reached.

Enable Function

The TinySwitch senses the ENABLE pin to determine whether or not to proceed with the next switch cycle as described earlier. Once a cycle is started TinySwitch always completes the cycle (even when the ENABLE pin changes state half way through the cycle). This operation results in a power supply whose output voltage ripple is determined by the output capacitor, amount of energy per switch cycle and the delay of the ENABLE feedback.

The ENABLE signal is generated on the secondary by comparing the power supply output voltage with a reference voltage. The ENABLE signal is high when the power supply output voltage is less than the reference voltage.

In a typical implementation, the ENABLE pin is driven by an optocoupler. The collector of the optocoupler transistor is connected to the ENABLE pin and the emitter is connected to the SOURCE pin. The optocoupler LED is connected in series with a Zener across the DC output voltage to be regulated. When the output voltage exceeds the target regulation voltage level (optocoupler diode voltage drop plus Zener voltage), the optocoupler diode will start to conduct, pulling the ENABLE pin low. The Zener could be replaced by a TL431 device for improved accuracy.

The ENABLE pin pull-down current threshold is nominally 50 µA, but is set to 40 µA the instant the threshold is exceeded. This is reset to 50 µA when the ENABLE pull-down current drops below the current threshold of 40 µA.

ON/OFF Control

The internal clock of the TinySwitch runs all the time. At the beginning of each clock cycle the TinySwitch samples the ENABLE pin to decide whether or not to implement a switch cycle. If the ENABLE pin is high (< 40 µA), then a switching cycle takes place. If the ENABLE pin is low (greater than 50 µA) then no switching cycle occurs, and the ENABLE pin status is sampled again at the start of the subsequent clock cycle.

At full load TinySwitch will conduct during the majority of its clock cycles (Figure 4). At loads less than full load, the TinySwitch will “skip” more cycles in order to maintain voltage regulation at the secondary output (Figure 5). At light load or no load, almost all cycles will be skipped (Figure 6). A small percentage of cycles will conduct to support the power consumption of the power supply.

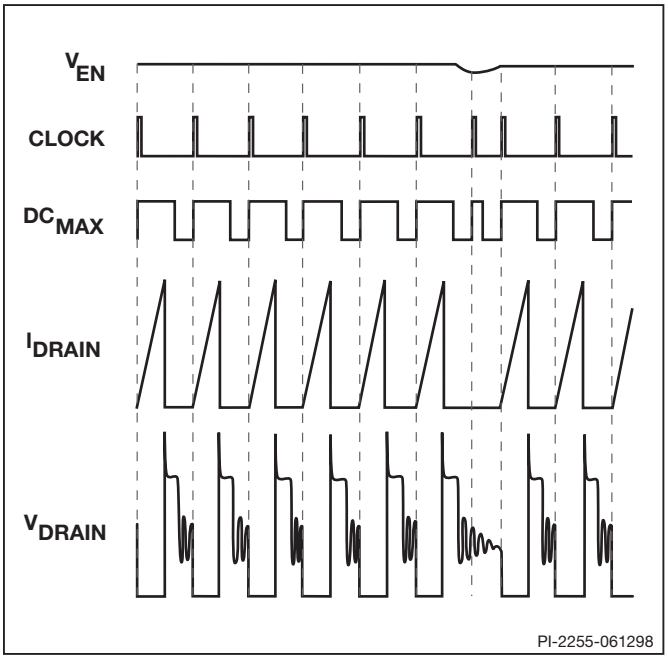

Figure 4. TinySwitch Operation at Heavy Load.

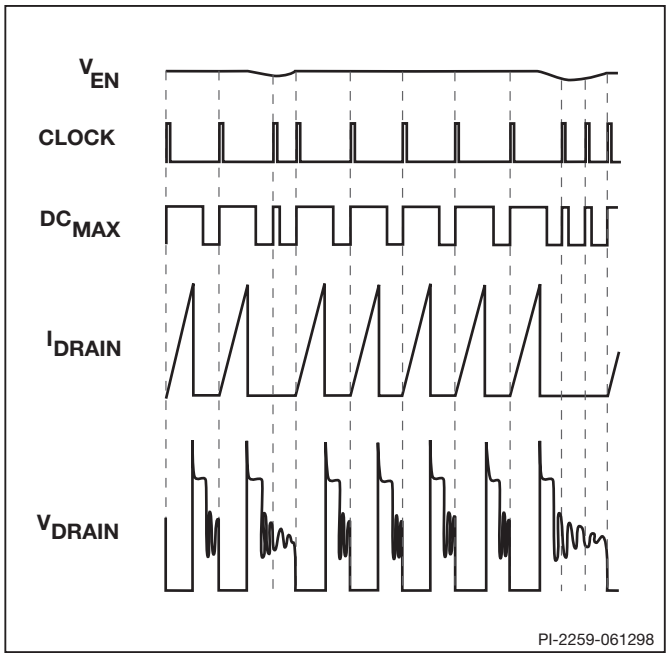

Figure 5. TinySwitch Operation at Medium Load.

The response time of TinySwitch ON/OFF control scheme is very fast compared to normal PWM control. This provides high line ripple rejection and excellent transient response.

Power Up/Down

TinySwitch requires only a 0.1 µF capacitor on the BYPASS pin. Because of the small size of this capacitor, the power-up delay is kept to an absolute minimum, typically 0.3 ms (Figure 7). Due to the fast nature of the ON/OFF feedback, there is no overshoot at the power supply output. During power-down, the power MOSFET will switch until the rectified line voltage drops to approximately 12 V. The power MOSFET will then remain off without any glitches (Figure 8).

Bias Winding Eliminated

TinySwitch does not require a bias winding to provide power to the chip. Instead it draws the power directly from the DRAIN pin (see Functional Description above). This has two main benefits. First for a nominal application, this eliminates the cost of an extra bias winding and associated components. Secondly, for charger applications, the current-voltage characteristic often allows the output voltage to fall to low values while still delivering power. This type of application normally requires a forward-bias winding which has many more associated components, none of which are necessary with TinySwitch.

Current Limit Operation

Each switching cycle is terminated when the DRAIN current reaches the current limit of the TinySwitch. For a given primary inductance and input voltage, the duty cycle is constant. However, duty cycle does change inversely with the input voltage providing "voltage feed-forward" advantages: good line ripple rejection and relatively constant power delivery independent of the input voltage.

44 kHz Switching Frequency (TNY253/254)

Switching frequency (with no cycle skipping) is set at 44 kHz. This provides several advantages. At higher switching frequencies, the capacitive switching losses are a significant proportion of the power losses in a power supply. At higher frequencies, the preferred snubbing schemes are RCD or diode-Zener clamps. However, due to the lower switching frequency of TinySwitch , it is possible to use a simple RC snubber (and even just a capacitor alone in 115 VAC applications at powers levels below 4 W).

Secondly, a low switching frequency also reduces EMI filtering requirements. At 44 kHz, the first, second and third harmonics are all below 150 kHz where the EMI limits are not very restrictive. For power levels below 4 W it is possible to meet worldwide EMI requirements with only resistive and capacitive filter elements (no inductors or chokes). This significantly reduces EMI filter costs.

Finally, if the application requires stringent noise emissions (such as video applications), then the TNY253/254 will allow more effective use of diode snubbing (and other secondary snubbing techniques). The lower switching frequency allows RC snubbers to be used to reduce noise, without significantly impacting the efficiency of the supply.

130 kHz Switching Frequency (TNY255)

The switching frequency (with no cycle skipping) is set at 130 kHz. This allows the TNY255 to deliver 10 W while still using the same size, low cost transformer (EE16) as used by the TNY253/254 for lower power applications.

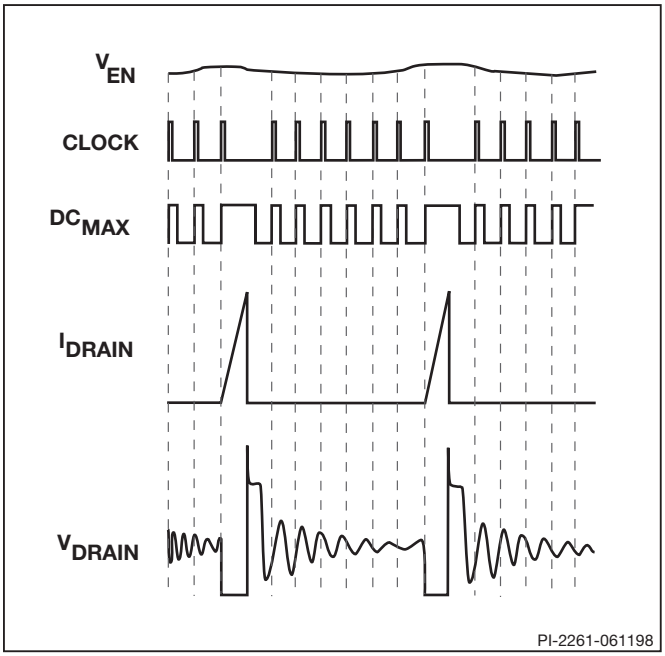

Figure 6. TinySwitch Operation at Light Load.

BYPASS Pin Capacitor
The BYPASS pin uses a small 0.1 µF ceramic capacitor for decoupling the internal power supply of the TinySwitch.

Application Examples

Television Standby

TinySwitch is an ideal solution for low cost, high efficiency standby power supplies used in consumer electronic products such as TVs. Figure 9 shows a 7.5 V, 1.3 W flyback circuit that uses TNY253 for implementing a TV standby supply. The circuit operates from the DC high-voltage already available from the main power supply. This input voltage can range from 120 to 375 VDC depending on the input AC voltage range that the TV is rated for. Capacitor C1 filters the high-voltage DC supply, and is necessary only if there is a long trace length from the source of the DC supply to the inputs of the TV standby circuit. The high-voltage DC bus is applied to the series combination of the primary winding of T1 and the integrated high-voltage MOSFET inside the TNY253. The low operating frequency of the TNY253 (44 kHz), allows a low cost snubber circuit C2 and R1 to be used in place of a primary clamp circuit. In addition to limiting the DRAIN turn off voltage spike to a safe value, the RC snubber also reduces radiated video noise by lowering the dv/dt of the DRAIN waveform, which is critical for video applications such as TV and VCR. On fixed frequency PWM and RCC circuits, use of a snubber will result in an undesirable fixed AC switching loss that is independent of load. The ON/OFF control on the TinySwitch eliminates this problem by scaling the effective switching frequency and therefore,

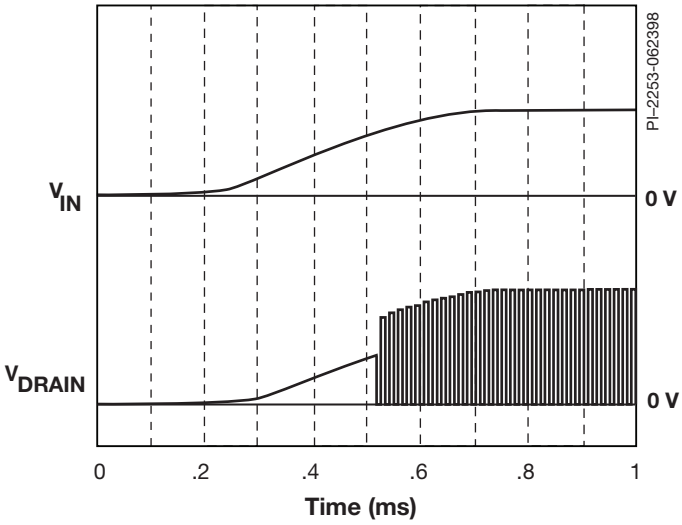

Figure 7. TinySwitch Power-Up Timing Diagram.

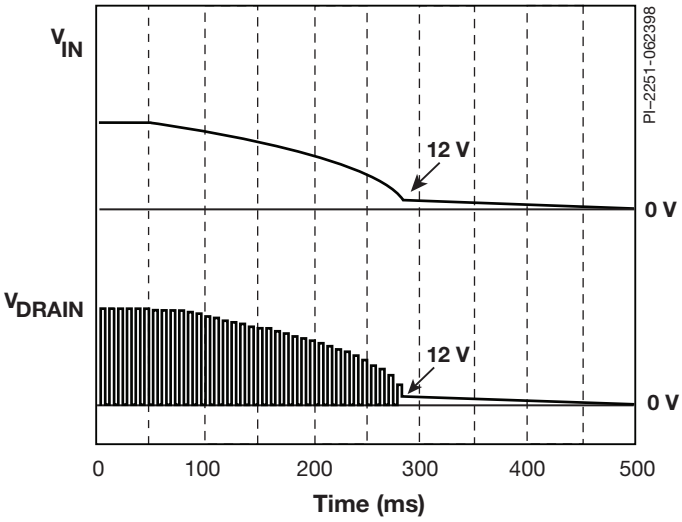

Figure 8. TinySwitch Power Down Timing Diagram.

switching loss linearly with load. Thus the efficiency of the supply stays relatively constant down to a fraction of a watt of output loading.

The secondary winding is rectified and filtered by D1 and C4 to create the 7.5 V output. L1 and C5 provide additional filtering. The output voltage is determined by the sum of the optocoupler U2 LED forward drop (~ 1 V) and Zener diode VR1 voltage. The resistor R2, maintains a bias current through the Zener to improve its voltage tolerance.

10 W Standby

The TNY255 is ideal for standby applications that require up to 10 W of power from 230 VAC or 100/115 VAC with doubler circuit. The TNY255 operates at 130 kHz as opposed to 44 kHz for TNY253/254. The higher frequency operation allows the

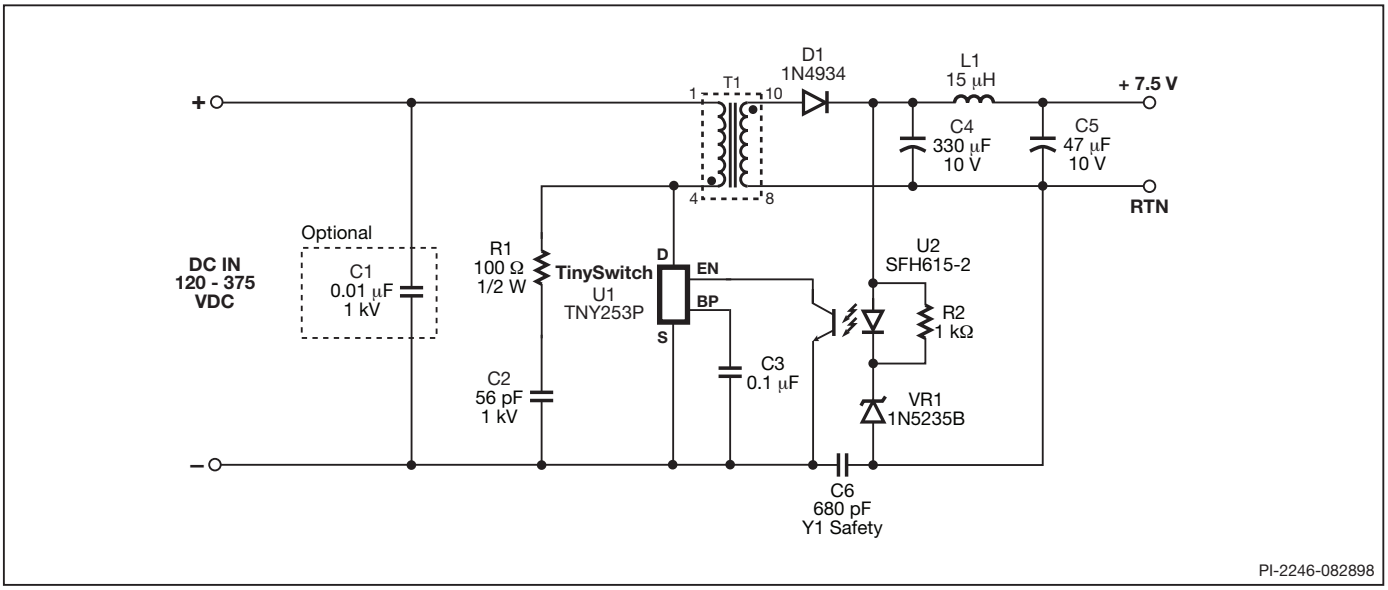

Figure 9. 1.3 W TV Standby Circuit using TNY253.

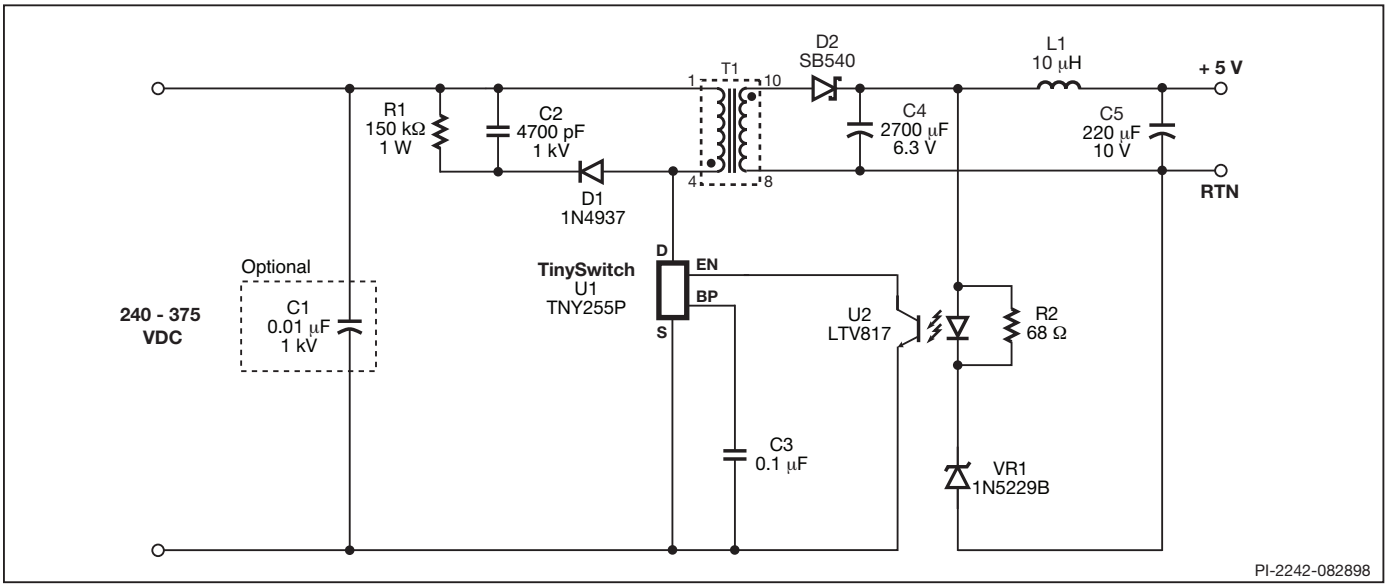

Figure 10. 10 W Standby Supply Circuit.

use of a low cost EE16 core transformer up to the 10 W level. Figure 10 shows a 5 V, 10 W circuit for such an application. The circuit operates from the high-voltage DC supply already available from the main power supply. Capacitor C1 filters the high-voltage DC supply, and is necessary only if there is a long trace length from the source of the DC supply to the inputs of the standby circuit. The high-voltage DC bus is applied to the primary winding of T1 in series with the integrated high-voltage MOSFET inside the TNY255. The diode D1, capacitor C2 and resistor R1 comprise the clamp circuit that limits the turn-off voltage spike on the TinySwitch DRAIN pin to a safe value. The secondary winding is rectified and filtered by D2 and C4 to provide the 5 V ouput. Additional filtering is provided by L1 and C5. The output voltage is determined by the sum of the optocoupler U2 LED forward drop (~ 1 V) and Zener diode VR1 voltage. The resistor R2, maintains a bias current through the Zener to improve its voltage tolerance. For tighter tolerance, a TL431 precision reference IC feedback circuit may be used.

Cellular Phone Charger

The TinySwitch is well suited for applications that require a constant voltage and constant current output. TinySwitch is always powered from the input high-voltage, therefore it does not require bias winding for power. Consequently, its operation is not dependent on the level of the output voltage. This allows for constant current charger designs that work down to zero volts on the output.

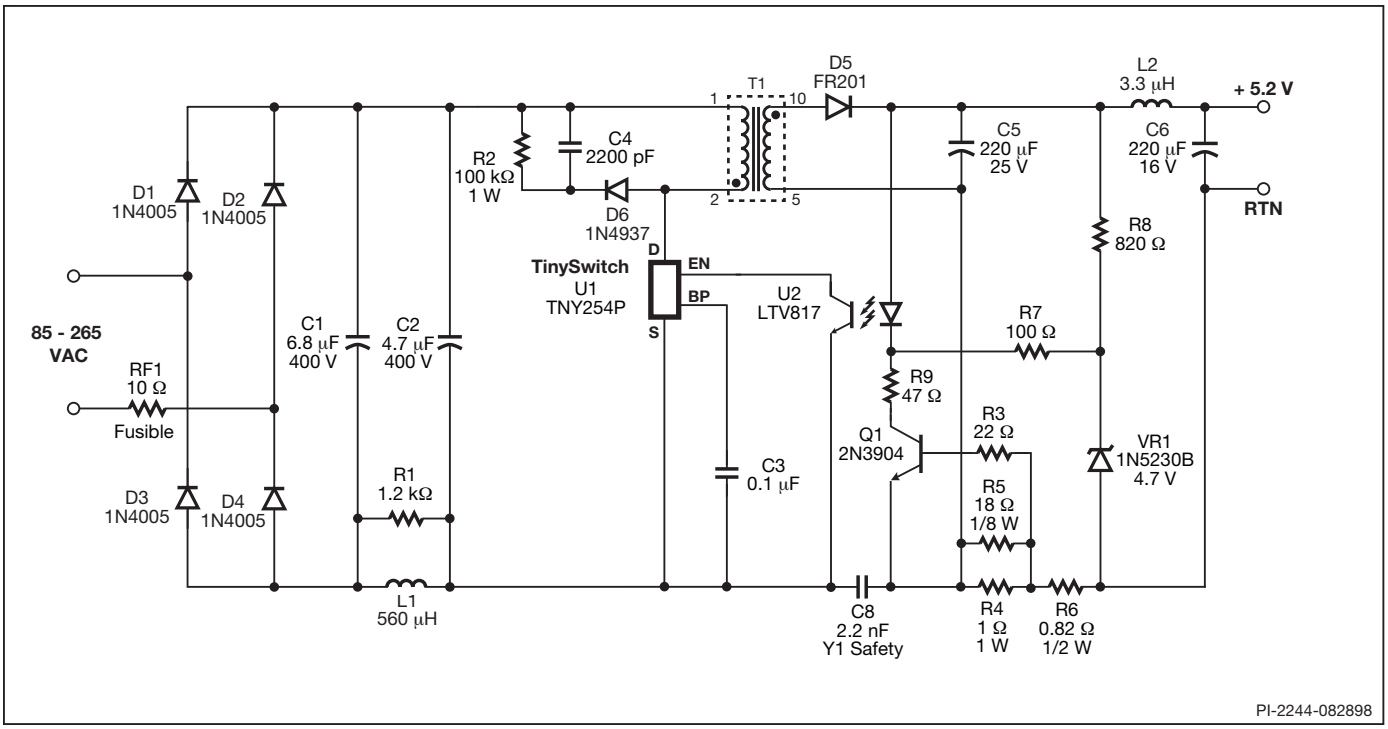

Figure 11. 3.6 W Constant Voltage-Constant Current Cellular Phone Charger Circuit.

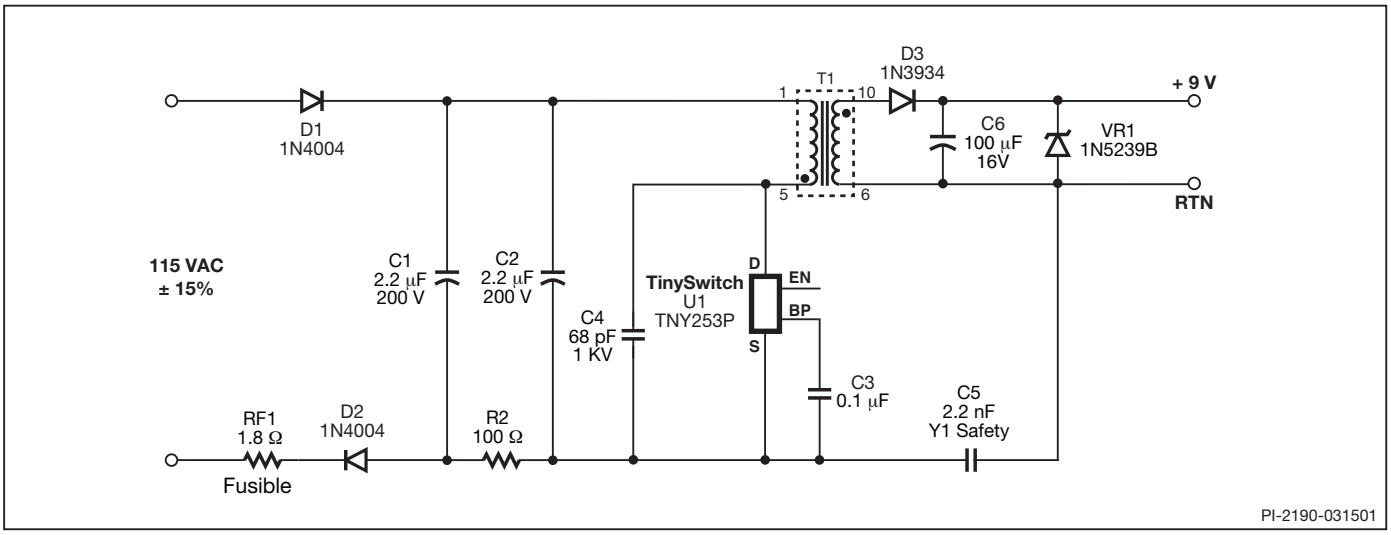

Figure 12. 0.5 W Open Loop AC Adapter Circuit.

Figure 11 shows a 5.2 V, 3.6 W cellular phone charger circuit that uses the TNY254 and provides constant voltage and constant current output over an universal input (85 to 265 VAC) range. The AC input is rectified and filtered by D1 - D4, C1 and C2 to create a high-voltage DC bus connected to T1 in series with the high-voltage MOSFET inside the TNY254. The inductor L1 forms a π-filter in conjunction with C1 and C2. The resistor R1 damps resonances in the inductor L1. The low frequency of operation of TNY254 (44 kHz) allows use of the simple π-filter described above in combination with a single Y1-capacitor C8 to meet worldwide conducted EMI standards. The diode D6, capacitor C4 and resistor R2 comprise the clamp circuit that limits the turn-off voltage spike on the TinySwitch DRAIN pin to a safe value. The secondary winding is rectified and filtered by D5 and C5 to provide the 5.2 V output. Additional filtering is provided by L2 and C6. The output voltage is determined by the sum of the optocoupler U2 LED forward drop (~ 1 V) and Zener diode VR1 voltage. The resistor R8, maintains a bias current through the Zener to improve its voltage tolerance.

A simple constant current circuit is implemented using the V_{BE} of transistor Q1 to sense the voltage across the current sense resistor R4, which can be made up of one or more resistors to

achieve the appropriate value. R3 is a base current limiting resistor. When the drop across R4 exceeds the V_{BE} of transistor Q1, it turns on and takes over the control of the loop by driving the optocoupler LED. R6 drops an additional voltage to keep the control loop in operation down to zero volts on the output. With the output shorted, the drop across R4 and R6 (~ 1.5 V) is sufficient to keep the Q1 and LED circuit active. Resistors R7 and R9 limit the forward current that could be drawn through VR1 by Q1 under output short-circuit conditions, due to the voltage drop across R6 and R4.

AC Adapter

Many consumer electronic products utilize low power 50/60 Hz transformer based AC adapters. The TinySwitch can cost effectively replace these linear adapters with a solution that is lighter, smaller and more energy efficient . Figure 12 shows a 9 V, 0.5 W AC adapter circuit using the TNY253. This circuit operates from a 115 VAC input. To save cost, this circuit runs without any feedback, in discontinuous conduction mode to deliver constant power output relatively independent of input voltage. The output voltage is determined by the voltage drop across Zener diode VR1. The primary inductance of the transformer is chosen to deliver a power that is in excess of the required output power by at least 50% to allow for component tolerances and to maintain some current through the Zener VR1 at full load. At no load, all of the power is delivered to the Zener which should be rated and heat sinked accordingly. In spite of a constant power consumption from the mains input, this solution is still significantly more efficient than linear adapters up to output power levels of approximately 1 W.

The AC input is rectified by diodes D1 and D2. D2 is used to reduce conducted EMI by only allowing noise onto the neutral line during diode conduction. The rectified AC is then filtered by capacitors C1 and C2 to generate a high-voltage DC bus, which is applied to the series combination of the primary winding of T1 and the high-voltage MOSFET inside the TNY253. The resistor R2 along with capacitors C1 and C2 form a π-filter which is sufficient for meeting EMI conducted emissions at these power levels. C5 is a Y capacitor which is used to reduce common mode EMI. Due to the 700 V rating of the TinySwitch MOSFET, a simple capacitive snubber (C4) is adequate to limit the leakage inductance spike in 115 VAC applications, at low power levels. The secondary winding is rectified and filtered by D3 and C6.

Key Application Considerations

For the most up to date information visit our Web site at: www.powerint.com

Design

Output Power Range

The power levels shown in the TinySwitch Selection Guide (Table 1) are approximate, recommended output power ranges that will provide a cost optimum design and are based on following assumptions:

1. The minimum DC input voltage is 90 V or higher for 85 VAC input or 240 V or higher for 230 VAC input or 115 VAC input with a voltage doubler.

2. The TinySwitch is not thermally limited - the source pins are soldered to sufficient copper area to keep the die temperature at or below 100 °C. This limitation does not usually apply to TNY253 and TNY254.

The maximum power capability of a TinySwitch depends on the thermal environment, transformer core size and design (continuous or discontinuous), efficiency required, minimum specified input voltage, input storage capacitance, output voltage, output diode forward drop, etc., and can be different from the values shown in the selection guide.

Audible Noise

At loads other than maximum load, the cycle skipping mode operation used in TinySwitch can generate audio frequency components in the transformer. This can cause the transformer to produce audio noise. Transformer audible noise can be reduced by utilizing appropriate transformer construction techniques and decreasing the peak flux density. For more information on audio suppression techniques, please check the Application Notes section on our Web site at ***www.powerint.com***.

Ceramic capacitors that use dielectrics such as Z5U, when used in clamp and snubber circuits, can also generate audio noise due to electrostriction and piezo-electric effects. If this is the case, replacing them with a capacitor having a different type of dielectric is the simplest solution. Polyester film capacitor is a good alternative.

Short-Circuit Current

The TinySwitch does not have an auto-restart feature. As a result, TinySwitch will continue to deliver power to the load during output short-circuit conditions. In the worst case, peak short-circuit current is equal to the primary current limit (I_{LIMIT}) multiplied by the turns ratio of the transformer (N_p/N_s). In a typical design the average current is 25 to 50% lower than this peak value. At the power levels of TinySwitch this is

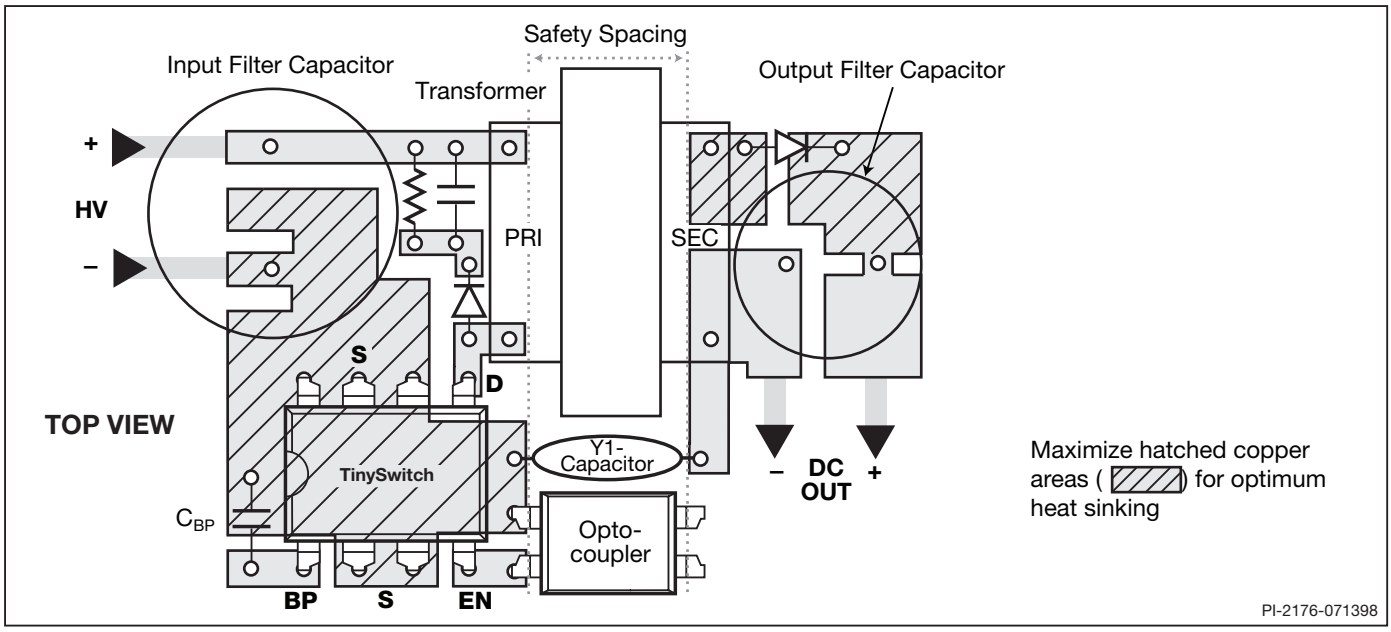

Figure 13. Recommended PC Layout for the TinySwitch.

easily accommodated by rating the output diode to handle the short-circuit current. The short-circuit current can be minimized by choosing the smallest (lowest current limit) TinySwitch for the required power.

Layout

Single Point Grounding
Use a single point ground connection at the SOURCE pin for the BYPASS pin capacitor and the Input Filter Capacitor (see Figure 13).

Primary Loop Area
The area of the primary loop that connects the input filter capacitor, transformer primary and TinySwitch together, should be kept as small as possible.

Primary Clamp Circuit
A clamp or snubber circuit is used to minimize peak voltage and ringing on the DRAIN pin at turn-off. This can be achieved by using an RC snubber for less than 3 W or an RCD clamp as shown in Figure 13 for higher power. A Zener and diode clamp across the primary or a single 550 V Zener clamp from DRAIN to SOURCE can also be used. In all cases care should be taken to minimize the circuit path from the snubber/clamp components to the transformer and TinySwitch.

Thermal Considerations
Copper underneath the TinySwitch acts not only as a single point ground, but also as a heatsink. The hatched area shown in Figure 13 should be maximized for good heat-sinking of TinySwitch and output diode.

Y Capacitor
The placement of the Y capacitor should be directly from the primary single point ground to the common/return terminal on the secondary side. Such placement will maximize the EMI benefit of the Y capacitor.

Optocoupler
It is important to maintain the minimum circuit path from the optocoupler transistor to the TinySwitch ENABLE and SOURCE pins to minimize noise coupling.

Output Diode
For best performance, the area of the loop connecting the secondary winding, the Output Diode and the Output Filter Capacitor, should be minimized. See Figure 13 for optimized layout. In addition, sufficient copper area should be provided at the anode and cathode terminals of the diode to adequately heatsink the diode under output short-circuit conditions.

Input and Output Filter Capacitors
There are constrictions in the traces connected to the input and output filter capacitors. These constrictions are present for two reasons. The first is to force all the high frequency currents to flow through the capacitor (if the trace were wide then it could flow around the capacitor). Secondly, the constrictions minimize the heat transferred from the TinySwitch to the input filter capacitor and from the secondary diode to the output filter capacitor. The common/return (the negative output terminal in Figure 13) terminal of the output filter capacitor should be connected with a short, low resistance path to the secondary winding. In addition, the common/return output connection should be taken directly from the secondary winding pin and not from the Y capacitor connection point.

ABSOLUTE MAXIMUM RATINGS[1]

DRAIN Voltage ..... -0.3 V to 700 V
Peak DRAIN Current (TNY253/4) .....400 (500) mA[6]
Peak DRAIN Current (TNY255) .....530 (660) mA[6]
ENABLE Voltage ..... -0.3 V to 9 V
ENABLE Current ..... 100 mA
BYPASS Voltage ..... -0.3 V to 9 V
Storage Temperature..... -65 to 150 °C
Operating Junction Temperature[2] ..... -40 to 150 °C
Lead Temperature[3] .....260 °C
Thermal Impedance (θ_{JA}).....70 °C/W[4], 55 °C/W[5]
Thermal Impedance (θ_{JC})..... 11 °C/W

1. All voltages referenced to SOURCE, T_A = 25 °C.
2. Normally limited by internal circuitry.
3. 1/16" from case for 5 seconds.
4. Soldered to 0.36 sq. inch (232 mm^2), 2 oz. (610 gm/m^2) copper clad.
5. Soldered to 1 sq. inch (645 mm^2), 2 oz. (610 gm/m^2) copper clad.
6. The higher peak drain current is allowed while the drain voltage is simultaneously less than 400 V.

Parameter	Symbol	Conditions SOURCE = 0 V; T_J = -40 to 125 °C See Figure 14 (Unless Otherwise Specified)		Min	Typ	Max	Units
CONTROL FUNCTIONS							
Output Frequency	f_{OSC}	T_J = 25 °C	TNY253 TNY254	40	44	48	kHz
			TNY255	115	130	140	
Maximum Duty Cycle	DC_{MAX}	S1 Open	TNY253 TNY254	66	68	71	%
			TNY255	64	67	69	
ENABLE Pin Turnoff Threshold Current	I_{DIS}	T_J = -40 °C to 125 °C		-68	-50	-30	µA
		T_J = 125 °C		-68	-52	-45	
ENABLE Pin Hysteresis Current	I_{HYS}	See Note A		-15	-10	-5	µA
ENABLE Pin Voltage	V_{EN}	I_{EN} = -25 µA		1.10	1.45	1.80	V
ENABLE Short-Circuit Current	I_{ENSC}	V_{EN} = 0 V, T_J = -40 °C to 125 °C		-58	-42	-25	µA
		V_{EN} = 0 V, T_J = 125 °C		-58	-45	-38	
DRAIN Supply Current	I_{S1}	V_{EN} = 0 V (MOSFET Not Switching) See Note B	TNY253 TNY254		160	200	µA
			TNY255		170	215	
	I_{S2}	ENABLE Open (MOSFET Switching) See Note B, C	TNY253 TNY254		140	180	µA
			TNY255		215	265	
BYPASS Pin Charge Current	I_{CH1}	V_{BP} = 0 V, T_J = 25 °C See Note D, E	TNY253 TNY254	-5.0	-3.5	-2.0	mA
			TNY255	-6.0	-4.5	-3.0	
	I_{CH2}	V_{BP} = 4 V, T_J = 25 °C See Note D, E	TNY253 TNY254	-4.0	-2.5	-1.0	mA
			TNY255	-4.8	-3.3	-1.8	
BYPASS Pin Voltage	V_{BP}	See Note D		5.6	5.8	6.1	V
BYPASS Hysteresis	V_{BPH}			0.60	0.72	0.85	V

Parameter	Symbol	Conditions SOURCE = 0 V; T_J = -40 to 125 °C See Figure 14 (Unless Otherwise Specified)		Min	Typ	Max	Units
CIRCUIT PROTECTION							
Current Limit	I_{LIMIT} Note F	di/dt = 12.5 mA/µs T_J = 25 °C	TNY253	135	150	165	mA
		di/dt = 25 mA/µs T_J = 25 °C	TNY254	230	255	280	
		di/dt = 80 mA/µs T_J = 25 °C	TNY255	255	280	310	
Initial Current Limit	I_{INIT}	See Figure 17 T_J = 25 °C		0.65 x $I_{LIMIT(MIN)}$			mA
Leading Edge Blanking Time	t_{LEB}	T_J = 25 °C	TNY253 TNY254	170	240		ns
			TNY255	170	215		
Current Limit Delay	t_{ILD}	T_J = 25 °C See Note G	TNY253 TNY254		200	250	ns
			TNY255		100	150	
Thermal Shutdown Temperature				125	135	145	°C
Thermal Shutdown Hysteresis					70		°C
OUTPUT							
ON-State Resistance	$R_{DS(ON)}$	TNY253/TNY254 I_D = 25 mA	T_J = 25 °C		31	36	Ω
			T_J = 100 °C		50	60	
		TNY255 I_D = 33 mA	T_J = 25 °C		23	27	
			T_J = 100 °C		37	45	
OFF-State Drain Leakage Current	I_{DSS}	V_{BP} = 6.2 V, V_{EN} = 0 V, V_{DS} = 560 V, T_J = 125 °C				50	µA
Breakdown Voltage	BV_{DSS}	V_{BP} = 6.2 V, V_{EN} = 0 V, I_{DS} = 100 µA, T_J = 25 °C		700			V
Rise Time	t_R	Measured with Figure 10 Schematic.			50		ns
Fall Time	t_F				50		ns

Parameter	Symbol	Conditions SOURCE = 0 V; T_J = -40 to 125 °C See Figure 14 (Unless Otherwise Specified)		Min	Typ	Max	Units
OUTPUT (cont.)							
DRAIN Supply Voltage				50			V
Output Enable Delay	t_{EN}		TNY253 TNY254			14	µs
			TNY255			10	
Output Disable Setup Time	t_{DST}				0.5		µs

NOTES:

A. For a threshold with a negative value, negative hysteresis is a decrease in magnitude of the corresponding threshold.

B. Total current consumption is the sum of I_{S1} and I_{DSS} when ENABLE pin is shorted to ground (MOSFET not switching) and the sum of I_{S2} and I_{DSS} when ENABLE pin is open (MOSFET switching).

C. Since the output MOSFET is switching, it is difficult to isolate the switching current from the supply current at the DRAIN. An alternative is to measure the BYPASS pin current at 6.2 V.

D. BYPASS pin is not intended for sourcing supply current to external circuitry.

E. See typical performance characteristics section for BYPASS pin start-up charging waveform.

F. For current limit at other di/dt values, refer to current limit vs. di/dt curve under typical performance characteristics.

G. This parameter is derived from the change in current limit measured at 5X and 10X of the di/dt shown in the I_{LIMIT} specification.

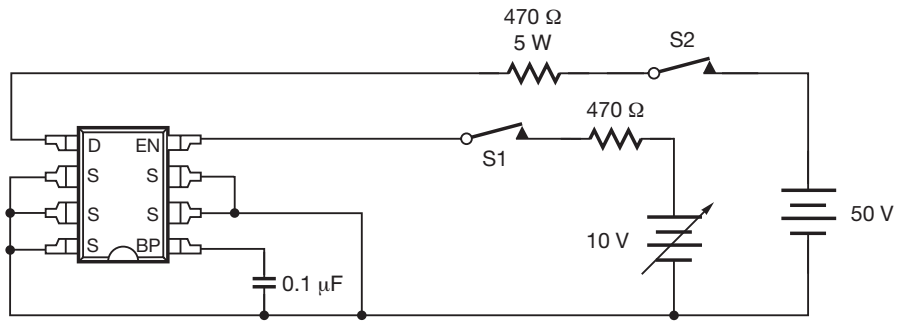

NOTE: This test circuit is not applicable for current limit or output characteristic measurements.

PI-2211-061898

Figure 14. TinySwitch General Test Circuit.

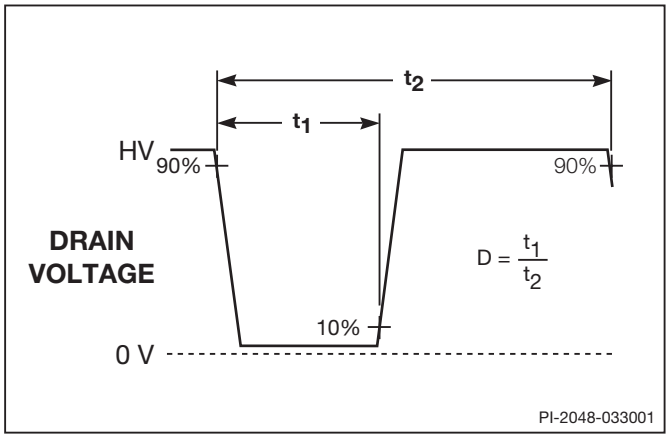

Figure 15. TinySwitch Duty Cycle Measurement.

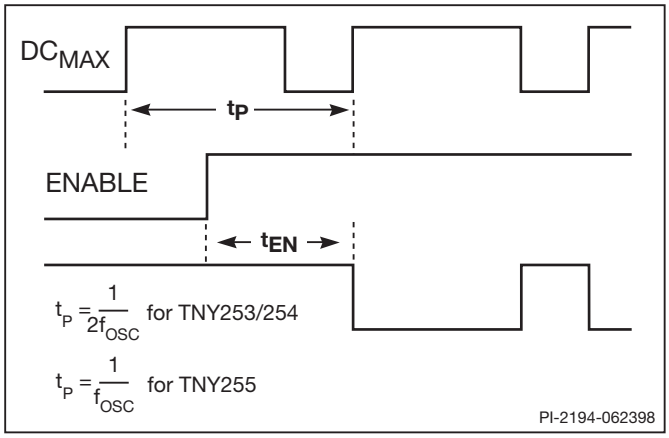

Figure 16. TinySwitch Output Enable Timing.

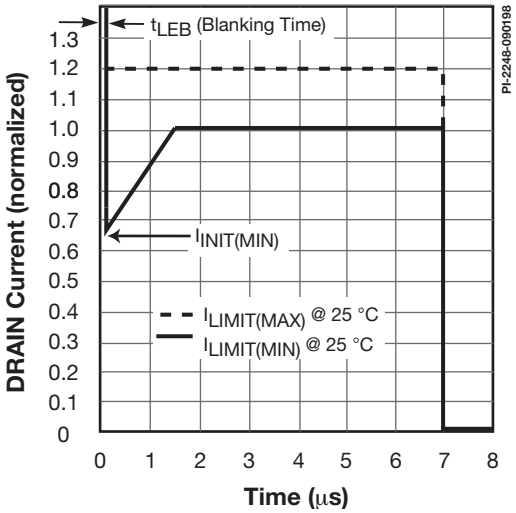

Figure 17. Current Limit Envelope.

Typical Performance Characteristics

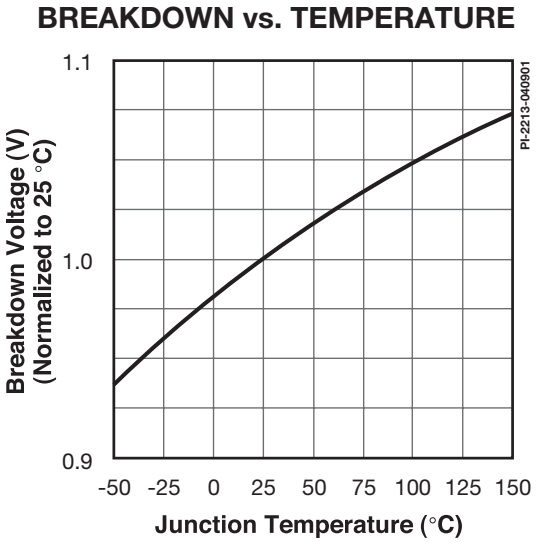

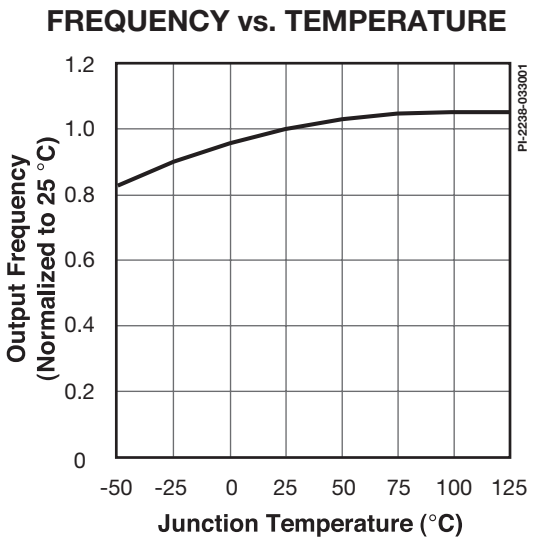

Typical Performance Characteristics (Continued)

CURRENT LIMIT vs. TEMPERATURE

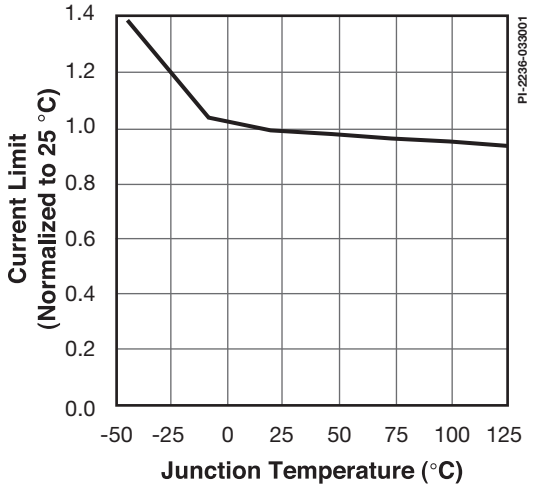

TNY253 CURRENT LIMIT vs. di/dt

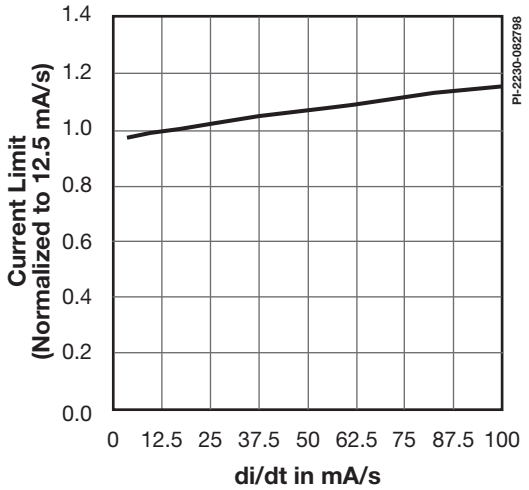

TNY254 CURRENT LIMIT vs. di/dt

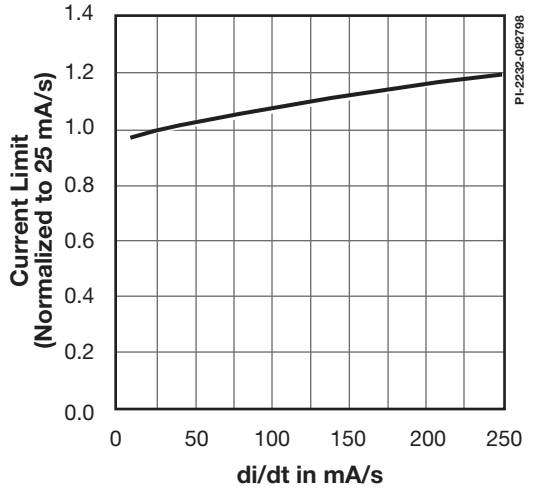

TNY255 CURRENT LIMIT vs. di/dt

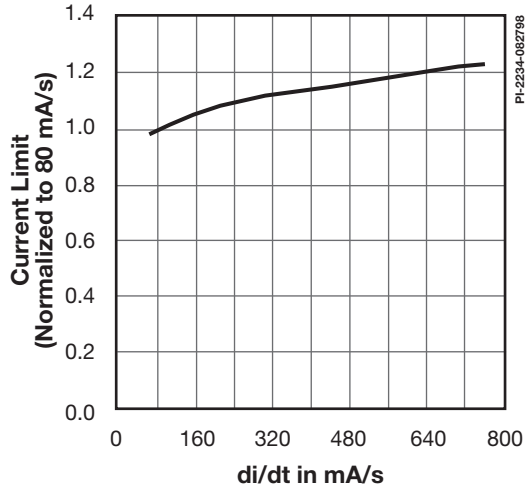

BYPASS PIN START-UP WAVEFORM

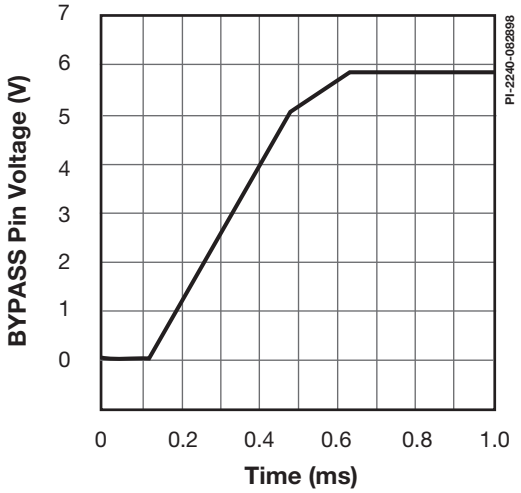

OUTPUT CHARACTERISTIC

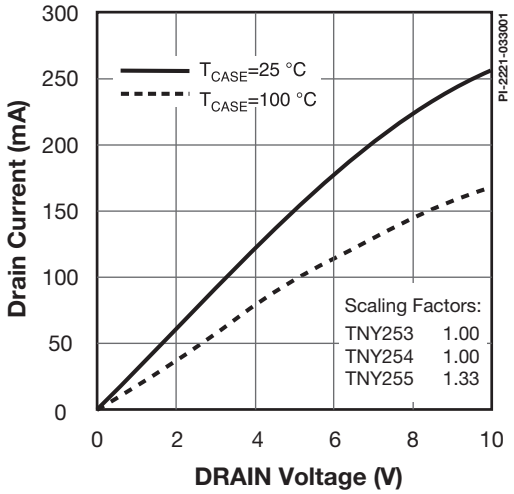

Typical Performance Characteristics (Continued)

C_{OSS} vs. DRAIN VOLTAGE

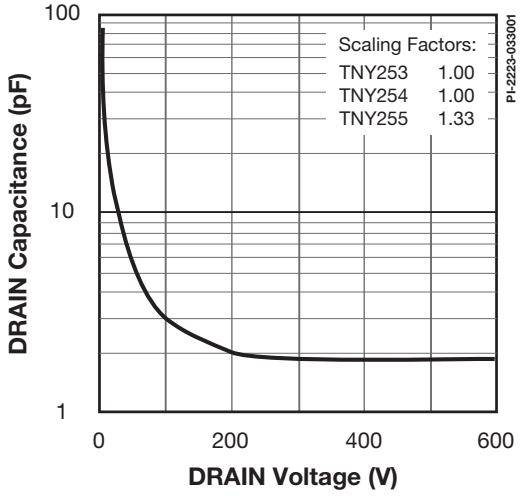

DRAIN CAPACITANCE POWER

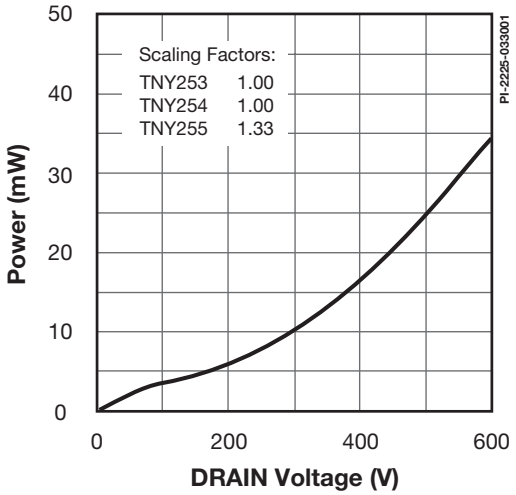

PDIP-8 (P Package)

DIM	Inches	mm
A	0.367-0.387	9.32-9.83
B	0.240-0.260	6.10-6.60
C	0.125-0.145	3.18-3.68
G	0.015-0.040	0.38-1.02
H	0.120-0.140	3.05-3.56
J1	0.057-0.068	1.45-1.73
J2	0.014-0.022	0.36-0.56
K	0.008-0.015	0.20-0.38
L	0.100 BSC	2.54 BSC
M	0.030 (MIN)	0.76 (MIN)
N	0.300-0.320	7.62-8.13
P	0.300-0.390	7.62-9.91
Q	0.300 BSC	7.62 BSC

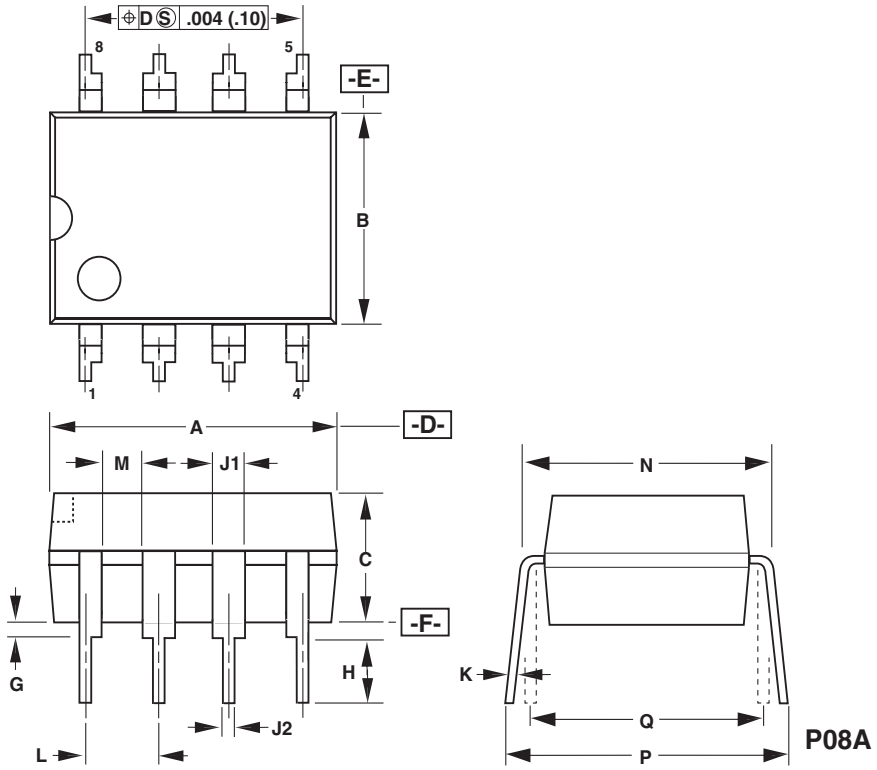

Notes:
1. Package dimensions conform to JEDEC specification MS-001-AB for standard dual in-line (DIP) package .300 inch row spacing (PLASTIC) 8 leads (issue B, 7/85).
2. Controlling dimensions are inches.
3. Dimensions shown do not include mold flash or other protrusions. Mold flash or protrusions shall not exceed .006 (.15) on any side.
4. D, E and F are reference datums on the molded body.

PI-2076-040110

SMD-8 (G Package)

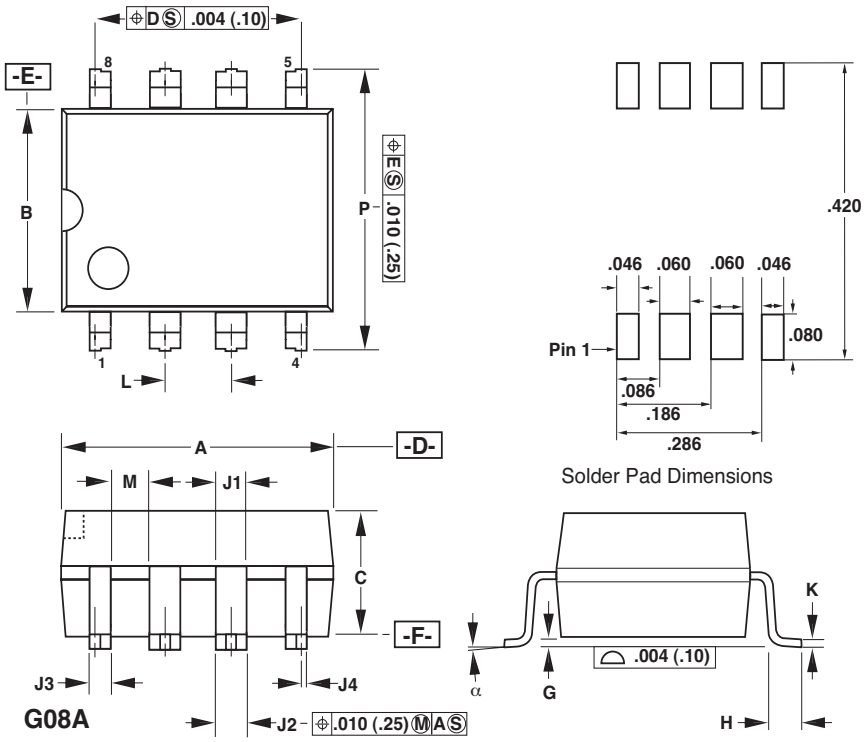

DIM	Inches	mm
A	0.367-0.387	9.32-9.83
B	0.240-0.260	6.10-6.60
C	0.125-0.145	3.18-3.68
G	0.004-0.012	0.10-0.30
H	0.036-0.044	0.91-1.12
J1	0.057-0.068	1.45-1.73
J2	0.048-0.053	1.22-1.35
J3	0.032-0.037	0.81-0.94
J4	0.007-0.011	0.18-0.28
K	0.010-0.012	0.25-0.30
L	0.100 BSC	2.54 BSC
M	0.030 (MIN)	0.76 (MIN)
P	0.372-0.388	9.45-9.86
α	0-8°	0-8°

Notes:
1. **Package dimensions conform to JEDEC specification MS-001-AB (issue B, 7/85) except for lead shape and size.**
2. **Controlling dimensions are inches.**
3. **Dimensions shown do not include mold flash or other protrusions. Mold flash or protrusions shall not exceed .006 (.15) on any side.**
4. **D, E and F are reference datums on the molded body.**

PI-2077-040110

Revision	Notes	Date
A	-	02/99
B	1. Leading edge blanking time (t_{LEB}) typical and minimum values increased to improve design flexibility. 2. Minimum DRAIN supply current (I_{S1}, I_{S2}) eliminated as it has no design revelance.	07/01
C	1. Updated package reference. 2. Corrected VR1 in Figure 12. 3. Corrected storage temperature, θ_{JA} and θ_{JC} and updated nomenclature in parameter table. 4. Corrected spacing and font sizes in figures.	
D	1. Corrected θ_{JA} for P/G package. 2. Updated DIP-8 and SMD-8 Package Drawings. 3. Figure 10 caption and text description modified.	04/03
E	1. Changed SOA limit.	02/12

Notes

For the latest updates, visit our website: www.powerint.com

Power Integrations reserves the right to make changes to its products at any time to improve reliability or manufacturability. Power Integrations does not assume any liability arising from the use of any device or circuit described herein. POWER INTEGRATIONS MAKES NO WARRANTY HEREIN AND SPECIFICALLY DISCLAIMS ALL WARRANTIES INCLUDING, WITHOUT LIMITATION, THE IMPLIED WARRANTIES OF MERCHANTABILITY, FITNESS FOR A PARTICULAR PURPOSE, AND NON-INFRINGEMENT OF THIRD PARTY RIGHTS.

Patent Information

The products and applications illustrated herein (including transformer construction and circuits external to the products) may be covered by one or more U.S. and foreign patents, or potentially by pending U.S. and foreign patent applications assigned to Power Integrations. A complete list of Power Integrations patents may be found at www.powerint.com. Power Integrations grants its customers a license under certain patent rights as set forth at http://www.powerint.com/ip.htm.

Life Support Policy

POWER INTEGRATIONS PRODUCTS ARE NOT AUTHORIZED FOR USE AS CRITICAL COMPONENTS IN LIFE SUPPORT DEVICES OR SYSTEMS WITHOUT THE EXPRESS WRITTEN APPROVAL OF THE PRESIDENT OF POWER INTEGRATIONS. As used herein:

1. A Life support device or system is one which, (i) is intended for surgical implant into the body, or (ii) supports or sustains life, and (iii) whose failure to perform, when properly used in accordance with instructions for use, can be reasonably expected to result in significant injury or death to the user.
2. A critical component is any component of a life support device or system whose failure to perform can be reasonably expected to cause the failure of the life support device or system, or to affect its safety or effectiveness.

The PI logo, TOPSwitch, TinySwitch, LinkSwitch, DPA-Switch, PeakSwitch, CAPZero, SENZero, LinkZero, HiperPFS, HiperTFS, HiperLCS, Qspeed, EcoSmart, Clampless, E-Shield, Filterfuse, StakFET, PI Expert and PI FACTS are trademarks of Power Integrations, Inc. Other trademarks are property of their respective companies. ©2012, Power Integrations, Inc.

Power Integrations Worldwide Sales Support Locations

World Headquarters
5245 Hellyer Avenue
San Jose, CA 95138, USA.
Main: +1-408-414-9200
Customer Service:
Phone: +1-408-414-9665
Fax: +1-408-414-9765
e-mail: usasales@powerint.com

China (Shanghai)
Rm 1601/1610, Tower 1,
Kerry Everbright City
No. 218 Tianmu Road West,
Shanghai, P.R.C. 200070
Phone: +86-21-6354-6323
Fax: +86-21-6354-6325
e-mail: chinasales@powerint.com

China (ShenZhen)
3rd Floor, Block A,
Zhongtou International Business
Center, No. 1061, Xiang Mei Rd,
FuTian District, ShenZhen,
China, 518040
Phone: +86-755-8379-3243
Fax: +86-755-8379-5828
e-mail: chinasales@powerint.com

Germany
Rueckertstrasse 3
D-80336, Munich
Germany
Phone: +49-89-5527-3910
Fax: +49-89-5527-3920
e-mail: eurosales@powerint.com

India
#1, 14th Main Road
Vasanthanagar
Bangalore-560052 India
Phone: +91-80-4113-8020
Fax: +91-80-4113-8023
e-mail: indiasales@powerint.com

Italy
Via De Amicis 2
20091 Bresso MI
Italy
Phone: +39-028-928-6000
Fax: +39-028-928-6009
e-mail: eurosales@powerint.com

Japan
Kosei Dai-3 Bldg.
2-12-11, Shin-Yokomana,
Kohoku-ku
Yokohama-shi Kanagwan
222-0033 Japan
Phone: +81-45-471-1021
Fax: +81-45-471-3717
e-mail: japansales@powerint.com

Korea
RM 602, 6FL
Korea City Air Terminal B/D, 159-6
Samsung-Dong, Kangnam-Gu,
Seoul, 135-728, Korea
Phone: +82-2-2016-6610
Fax: +82-2-2016-6630
e-mail: koreasales@powerint.com

Singapore
51 Newton Road
#15-08/10 Goldhill Plaza
Singapore, 308900
Phone: +65-6358-2160
Fax: +65-6358-2015
e-mail: singaporesales@powerint.com

Taiwan
5F, No. 318, Nei Hu Rd., Sec. 1
Nei Hu Dist.
Taipei, Taiwan 114, R.O.C.
Phone: +886-2-2659-4570
Fax: +886-2-2659-4550
e-mail: taiwansales@powerint.com

Europe HQ
1st Floor, St. James's House
East Street, Farnham
Surrey GU9 7TJ
United Kingdom
Phone: +44 (0) 1252-730-141
Fax: +44 (0) 1252-727-689
e-mail: eurosales@powerint.com

Applications Hotline
World Wide +1-408-414-9660

Applications Fax
World Wide +1-408-414-9760

OCEAN CHIPS
Океан Электроники
Поставка электронных компонентов

Компания «Океан Электроники» предлагает заключение долгосрочных отношений при поставках импортных электронных компонентов на взаимовыгодных условиях!

Наши преимущества:

- Поставка оригинальных импортных электронных компонентов напрямую с производств Америки, Европы и Азии, а так же с крупнейших складов мира;
- Широкая линейка поставок активных и пассивных импортных электронных компонентов (более 30 млн. наименований);
- Поставка сложных, дефицитных, либо снятых с производства позиций;
- Оперативные сроки поставки под заказ (от 5 рабочих дней);
- Экспресс доставка в любую точку России;
- Помощь Конструкторского Отдела и консультации квалифицированных инженеров;
- Техническая поддержка проекта, помощь в подборе аналогов, поставка прототипов;
- Поставка электронных компонентов под контролем ВП;
- Система менеджмента качества сертифицирована по Международному стандарту ISO 9001;
- При необходимости вся продукция военного и аэрокосмического назначения проходит испытания и сертификацию в лаборатории (по согласованию с заказчиком);
- Поставка специализированных компонентов военного и аэрокосмического уровня качества (Xilinx, Altera, Analog Devices, Intersil, Interpoint, Microsemi, Actel, Aeroflex, Peregrine, VPT, Syfer, Eurofarad, Texas Instruments, MS Kennedy, Miteq, Cobham, E2V, MA-COM, Hittite, Mini-Circuits, General Dynamics и др.);

Компания «Океан Электроники» является официальным дистрибьютором и эксклюзивным представителем в России одного из крупнейших производителей разъемов военного и аэрокосмического назначения **«JONHON»**, а так же официальным дистрибьютором и эксклюзивным представителем в России производителя высокотехнологичных и надежных решений для передачи СВЧ сигналов **«FORSTAR»**.

AVIC JONHON

«JONHON» (основан в 1970 г.)

Разъемы специального, военного и аэрокосмического назначения:

(Применяются в военной, авиационной, аэрокосмической, морской, железнодорожной, горно- и нефтедобывающей отраслях промышленности)

«FORSTAR» (основан в 1998 г.)

ВЧ соединители, коаксиальные кабели, кабельные сборки и микроволновые компоненты:

(Применяются в телекоммуникациях гражданского и специального назначения, в средствах связи, РЛС, а так же военной, авиационной и аэрокосмической отраслях промышленности).

FORSTAR®

Телефон: 8 (812) 309-75-97 (многоканальный)
Факс: 8 (812) 320-03-32
Электронная почта: ocean@oceanchips.ru
Web: http://oceanchips.ru/
Адрес: 198099, г. Санкт-Петербург, ул. Калинина, д. 2, корп. 4, лит. А