CY7C64013C
CY7C64113C

Full-Speed USB (12-Mbps) Function

Features

- Full-speed USB Microcontroller
- 8-bit USB Optimized Microcontroller
  - Harvard architecture
  - 6-MHz external clock source
  - 12-MHz internal CPU clock
  - 48-MHz internal clock
- Internal memory
  - 256 bytes of RAM
  - 8 KB of PROM (CY7C64013C, CY7C64113C)
- Integrated Master/Slave I^2C-compatible Controller (100 kHz) enabled through General-Purpose I/O (GPIO) pins
- Hardware Assisted Parallel Interface (HAPI) for data transfer to external devices
- I/O ports
  - Three GPIO ports (Port 0 to 2) capable of sinking 7 mA per pin (typical)
  - An additional GPIO port (Port 3) capable of sinking 12 mA per pin (typical) for high current requirements: LEDs
  - Higher current drive achievable by connecting multiple GPIO pins together to drive a common output
  - Each GPIO port can be configured as inputs with internal pull-ups or open drain outputs or traditional CMOS outputs
  - A Digital to Analog Conversion (DAC) port with programmable current sink outputs is available on the CY7C64113C devices
  - Maskable interrupts on all I/O pins
- 12-bit free-running timer with one microsecond clock ticks
- Watchdog Timer (WDT)
- Internal Power-On Reset (POR)
- USB Specification Compliance
  - Conforms to USB Specification, Version 1.1
  - Conforms to USB HID Specification, Version 1.1
  - Supports up to five user configured endpoints
    - Up to four 8-byte data endpoints
    - Up to two 32-byte data endpoints
  - Integrated USB transceivers
- Improved output drivers to reduce EMI
- Operating voltage from 4.0 V to 5.5 V DC
- Operating temperature from 0 to 70 degrees Celsius
  - CY7C64013C available in 28-pin SOIC and 28-pin PDIP packages
  - CY7C64113C available in 48-pin SSOP packages
- Industry-standard programmer support

Functional Overview

The CY7C64013C and CY7C64113C are 8-bit One Time Programmable microcontrollers that are designed for full-speed USB applications. The instruction set has been optimized specifically for USB operations, although the microcontrollers can be used for a variety of non-USB embedded applications.

GPIO

The CY7C64013C features 19 GPIO pins to support USB and other applications. The I/O pins are grouped into three ports (P0[7:0], P1[2:0], P2[6:2], P3[2:0]) where each port can be configured as inputs with internal pull-ups, open drain outputs, or traditional CMOS outputs. There are 16 GPIO pins (Ports 0 and 1) which are rated at 7 mA typical sink current. Port 3 pins are rated at 12 mA typical sink current, a current sufficient to drive LEDs. Multiple GPIO pins can be connected together to drive a single output for more drive current capacity. Additionally, each GPIO can be used to generate a GPIO interrupt to the microcontroller. All of the GPIO interrupts share the same “GPIO” interrupt vector.

The CY7C64113C has 32 GPIO pins (P0[7:0], P1[7:0], P2[7:0], P3[7:0]).

DAC

The CY7C64113C has four programmable sink current I/O pins (DAC) pins (P4[7,2:0]). Every DAC pin includes an integrated 14-kΩ pull-up resistor. When a ‘1’ is written to a DAC I/O pin, the output current sink is disabled and the output pin is driven HIGH by the internal pull-up resistor. When a ‘0’ is written to a DAC I/O pin, the internal pull-up resistor is disabled and the output pin provides the programmed amount of sink current. A DAC I/O pin can be used as an input with an internal pull-up by writing a ‘1’ to the pin.

The sink current for each DAC I/O pin can be individually programmed to one of 16 values using dedicated Isink registers. DAC bits P4[1:0] can be used as high-current outputs with a programmable sink current range of 3.2 to 16 mA (typical). DAC bits P4[7,2] have a programmable current sink range of 0.2 to 1.0 mA (typical). Multiple DAC pins can be connected together to drive a single output that requires more sink current capacity. Each I/O pin can be used to generate a DAC interrupt to the microcontroller. Also, the interrupt polarity for each DAC I/O pin is individually programmable.

Clock

The microcontroller uses an external 6-MHz crystal and an internal oscillator to provide a reference to an internal PLL-based clock generator. This technology allows the customer application to use an inexpensive 6-MHz fundamental crystal that reduces the clock-related noise emissions (EMI). A PLL clock generator provides the 6-, 12-, and 48-MHz clock signals for distribution within the microcontroller.

[+] Feedback

Memory

The CY7C64013C and CY7C64113C have 8 KB of PROM.

Power on Reset, Watchdog and Free running Time

These parts include power-on reset logic, a Watchdog timer, and a 12-bit free-running timer. The power-on reset (POR) logic detects when power is applied to the device, resets the logic to a known state, and begins executing instructions at PROM address 0x0000. The Watchdog timer is used to ensure the microcontroller recovers after a period of inactivity. The firmware may become inactive for a variety of reasons, including errors in the code or a hardware failure such as waiting for an interrupt that never occurs.

I^2C and HAPI Interface

The microcontroller can communicate with external electronics through the GPIO pins. An I^2C-compatible interface accommodates a 100-kHz serial link with an external device. There is also a Hardware Assisted Parallel Interface (HAPI) which can be used to transfer data to an external device.

Timer

The free-running 12-bit timer clocked at 1 MHz provides two interrupt sources, 128-µs and 1.024-ms. The timer can be used to measure the duration of an event under firmware control by reading the timer at the start of the event and after the event is complete. The difference between the two readings indicates the duration of the event in microseconds. The upper four bits of the timer are latched into an internal register when the firmware reads the lower eight bits. A read from the upper four bits actually reads data from the internal register, instead of the timer. This feature eliminates the need for firmware to try to compensate if the upper four bits increment immediately after the lower eight bits are read.

Interrupts

The microcontroller supports 11 maskable interrupts in the vectored interrupt controller. Interrupt sources include the USB Bus Reset interrupt, the 128-µs (bit 6) and 1.024-ms (bit 9) outputs from the free-running timer, five USB endpoints, the DAC port, the GPIO ports, and the I^2C-compatible master mode interface. The timer bits cause an interrupt (if enabled) when the bit toggles from LOW ‘0’ to HIGH ‘1.’ The USB endpoints interrupt after the USB host has written data to the endpoint FIFO or after the USB controller sends a packet to the USB host. The DAC ports have an additional level of masking that allows the user to select which DAC inputs can cause a DAC interrupt. The GPIO ports also have a level of masking to select which GPIO inputs can cause a GPIO interrupt. For additional flexibility, the input transition polarity that causes an interrupt is programmable for each pin of the DAC port. Input transition polarity can be programmed for each GPIO port as part of the port configuration. The interrupt polarity can be rising edge (‘0’ to ‘1’) or falling edge (‘1’ to ‘0’).

[+] Feedback

Logic Block Diagram

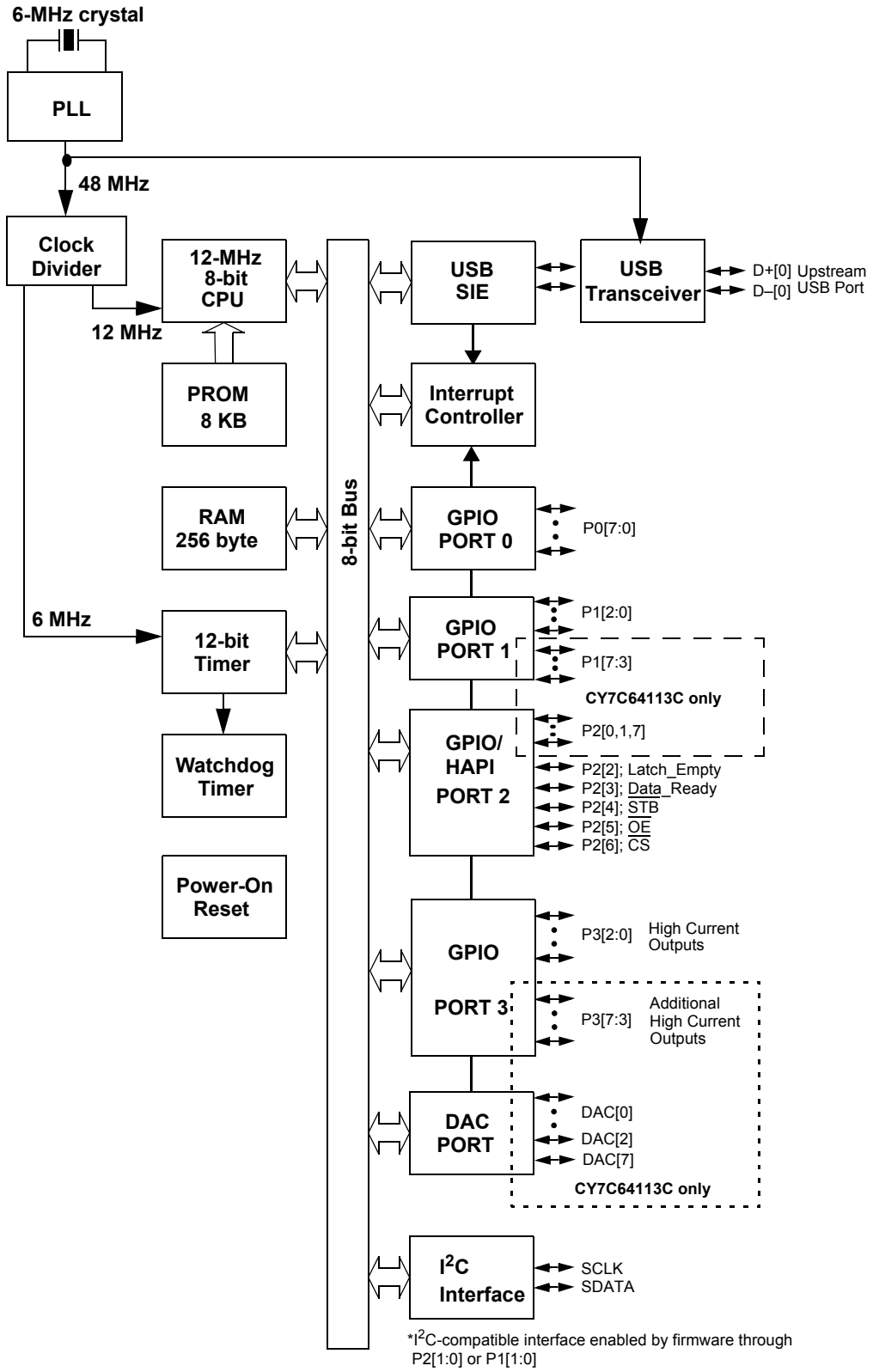

[+] Feedback

Contents

Pin Configurations **5**
Product Summary Tables **6**
Pin Assignments 6
I/O Register Summary 6
Instruction Set Summary 9
Programming Model **10**
14-Bit Program Counter (PC) 10
8-Bit Accumulator (A) 12
8-Bit Temporary Register (X) 12
8-Bit Program Stack Pointer (PSP) 12
8-Bit Data Stack Pointer (DSP) 13
Address Modes 13
Clocking **13**
Reset **14**
Power-On Reset (POR) 14
Watchdog Reset (WDR) 14
Suspend Mode **14**
General-Purpose I/O (GPIO) Ports **15**
GPIO Configuration Port 16
GPIO Interrupt Enable Ports 17
DAC Port **18**
DAC Isink Registers 19
DAC Port Interrupts 20
12-Bit Free-Running Timer **20**
I^2C and HAPI Configuration Register **21**
I2C-compatible Controller **22**
Hardware Assisted Parallel Interface (HAPI) **24**
Processor Status and Control Register **25**
Interrupts **26**
Interrupt Vectors 27
Interrupt Latency 29
USB Bus Reset Interrupt 29
Timer Interrupt 29
USB Endpoint Interrupts 29
DAC Interrupt 29
GPIO/HAPI Interrupt 29
I^2C Interrupt 30
USB Overview **30**
USB Serial Interface Engine (SIE) 31
USB Enumeration 31
USB Upstream Port Status and Control 31
USB Serial Interface Engine Operation **32**
USB Device Address 32
USB Device Endpoints 32
USB Control Endpoint Mode Register 32
USB Non-Control Endpoint Mode Registers 33
USB Endpoint Counter Registers 34
Endpoint Mode/Count Registers Update and Locking Mechanism 34
USB Mode Tables **36**
Register Summary **41**
Sample Schematic **44**
Absolute Maximum Ratings **45**
Electrical Characteristics **45**
Switching Characteristics **46**
Ordering Information **48**
Ordering Code Definitions 48
Package Diagrams **49**
Acronyms **51**
Document Conventions **51**
Units of Measure 51
Document History Page **52**
Sales, Solutions, and Legal Information **53**
Worldwide Sales and Design Support 53
Products 53
PSoC Solutions 53

[+] Feedback

Pin Configurations

TOP VIEW

CY7C64013C
28-pin SOIC

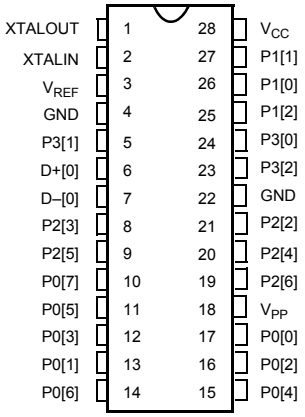

CY7C64013C
28-pin PDIP

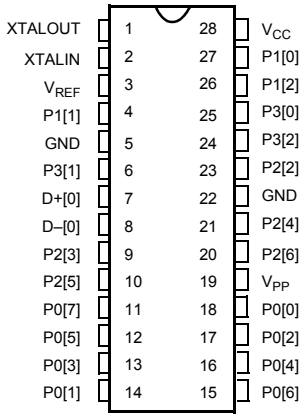

CY7C64113C
48-pin SSOP

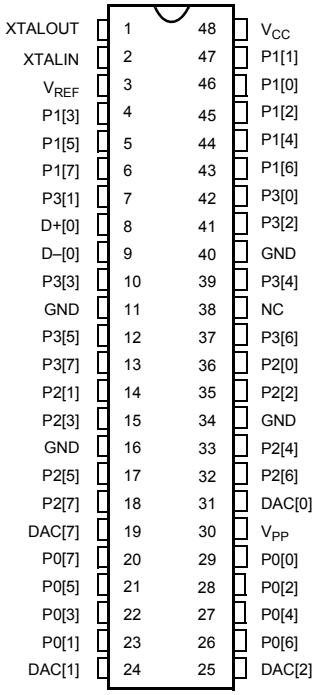

[+] Feedback

Product Summary Tables

Pin Assignments

Table 1. Pin Assignments

Name	I/O	28-pin SOIC	28-pin PDIP	48-pin SSOP	Description
D+[0], D–[0]	I/O	6, 7	7, 8	7, 8	Upstream port, USB differential data.
P0	I/O	P0[7:0] 10, 14, 11, 15, 12, 16, 13, 17	P0[7:0] 11, 15, 12, 16, 13, 17, 14, 18	P0[7:0] 20, 26, 21, 27, 22, 28, 23, 29	GPIO Port 0 capable of sinking 7 mA (typical).
P1	I/O	P1[2:0] 25, 27, 26	P1[2:0] 26, 4, 27	P1[7:0] 6, 43, 5, 44, 4, 45, 47, 46	GPIO Port 1 capable of sinking 7 mA (typical).
P2	I/O	P2[6:2] 19, 9, 20, 8, 21	P2[6:2] 20, 10, 21, 9, 23	P2[7:0] 18, 32, 17, 33, 15, 35, 14, 36	GPIO Port 2 capable of sinking 7 mA (typical). HAPI is also supported through P2[6:2].
P3	I/O	P3[2:0] 23, 5, 24	P3[2:0] 24, 6, 25	P3[7:0] 13, 37, 12, 39, 10, 41, 7, 42	GPIO Port 3, capable of sinking 12 mA (typical).
DAC	I/O			DAC[7,2:0] 19, 25, 24, 31	DAC Port with programmable current sink outputs. DAC[1:0] offer a programmable range of 3.2 to 16 mA typical. DAC[7,2] have a programmable sink current range of 0.2 to 1.0 mA typical.
$XTAL_{IN}$	IN	2	2	2	6-MHz crystal or external clock input.
$XTAL_{OUT}$	OUT	1	1	1	6-MHz crystal out.
V_{PP}	IN	18	19	30	Programming voltage supply, tie to ground during normal operation.
V_{CC}	IN	28	28	48	Voltage supply.
GND	IN	4, 22	5, 22	11, 16, 34, 40	Ground.
V_{REF}	IN	3	3	3	External 3.3 V supply voltage for the differential data output buffers and the D+ pull-up.
NC				38	No Connect.

I/O Register Summary

I/O registers are accessed via the I/O Read (IORD) and I/O Write (IOWR, IOWX) instructions. IORD reads data from the selected port into the accumulator. IOWR performs the reverse; it writes data from the accumulator to the selected port. Indexed I/O Write (IOWX) adds the contents of X to the address in the instruction to form the port address and writes data from the accumulator to the specified port. Specifying address 0 (e.g., IOWX 0h) means the I/O register is selected solely by the contents of X.

All undefined registers are reserved. It is important not to write to reserved registers as this may cause an undefined operation or increased current consumption during operation. When writing to registers with reserved bits, the reserved bits must be written with ‘0.’

[+] Feedback

Table 2. I/O Register Summary

Register Name	I/O Address	Read/Write	Function	Page
Port 0 Data	0x00	R/W	GPIO Port 0 Data	15
Port 1 Data	0x01	R/W	GPIO Port 1 Data	16
Port 2 Data	0x02	R/W	GPIO Port 2 Data	16
Port 3 Data	0x03	R/W	GPIO Port 3 Data	16
Port 0 Interrupt Enable	0x04	W	Interrupt Enable for Pins in Port 0	17
Port 1 Interrupt Enable	0x05	W	Interrupt Enable for Pins in Port 1	17
Port 2 Interrupt Enable	0x06	W	Interrupt Enable for Pins in Port 2	18
Port 3 Interrupt Enable	0x07	W	Interrupt Enable for Pins in Port 3	18
GPIO Configuration	0x08	R/W	GPIO Port Configurations	16
HAPI and I^2C Configuration	0x09	R/W	HAPI Width and I^2C Position Configuration	21
USB Device Address A	0x10	R/W	USB Device Address A	32
EP A0 Counter Register	0x11	R/W	USB Address A, Endpoint 0 Counter	32
EP A0 Mode Register	0x12	R/W	USB Address A, Endpoint 0 Configuration	32
EP A1 Counter Register	0x13	R/W	USB Address A, Endpoint 1 Counter	32
EP A1 Mode Register	0x14	R/W	USB Address A, Endpoint 1 Configuration	32
EP A2 Counter Register	0x15	R/W	USB Address A, Endpoint 2 Counter	32
EP A2 Mode Register	0x16	R/W	USB Address A, Endpoint 2 Configuration	32
USB Status & Control	0x1F	R/W	USB Upstream Port Traffic Status and Control	31
Global Interrupt Enable	0x20	R/W	Global Interrupt Enable	26
Endpoint Interrupt Enable	0x21	R/W	USB Endpoint Interrupt Enables	27
Timer (LSB)	0x24	R	Lower 8 Bits of Free-running Timer (1 MHz)	20
Timer (MSB)	0x25	R	Upper 4 Bits of Free-running Timer	21
WDT Clear	0x26	W	Watchdog Timer Clear	14
I^2C Control & Status	0x28	R/W	I^2C Status and Control	22
I^2C Data	0x29	R/W	I^2C Data	22
DAC Data	0x30	R/W	DAC Data	19
DAC Interrupt Enable	0x31	W	Interrupt Enable for each DAC Pin	20
DAC Interrupt Polarity	0x32	W	Interrupt Polarity for each DAC Pin	20
DAC Isink	0x38-0x3F	W	Input Sink Current Control for each DAC Pin	19
Reserved	0x40		Reserved	
EP A3 Counter Register	0x41	R/W	USB Address A, Endpoint 3 Counter	32
EP A3 Mode Register	0x42	R/W	USB Address A, Endpoint 3 Configuration	32
EP A4 Counter Register	0x43	R/W	USB Address A, Endpoint 4 Counter	32
EP A4 Mode Register	0x44	R/W	USB Address A, Endpoint 4 Configuration	32
Reserved	0x48		Reserved	
Reserved	0x49		Reserved	
Reserved	0x4A		Reserved	
Reserved	0x4B		Reserved	
Reserved	0x4C		Reserved	

[+] Feedback

Table 2. I/O Register Summary *(continued)*

Register Name	I/O Address	Read/Write	Function	Page
Reserved	0x4D		Reserved	
Reserved	0x4E		Reserved	
Reserved	0x4F		Reserved	
Reserved	0x50		Reserved	
Reserved	0x51		Reserved	
Processor Status & Control	0xFF	R/W	Microprocessor Status and Control Register	23

[+] Feedback

Instruction Set Summary

Refer to the *CYASM Assembler User's Guide* for more details.

Table 3. Instruction Set Summary

MNEMONIC	operand	opcode	cycles
HALT		00	7
ADD A,expr	data	01	4
ADD A,[expr]	direct	02	6
ADD A,[X+expr]	index	03	7
ADC A,expr	data	04	4
ADC A,[expr]	direct	05	6
ADC A,[X+expr]	index	06	7
SUB A,expr	data	07	4
SUB A,[expr]	direct	08	6
SUB A,[X+expr]	index	09	7
SBB A,expr	data	0A	4
SBB A,[expr]	direct	0B	6
SBB A,[X+expr]	index	0C	7
OR A,expr	data	0D	4
OR A,[expr]	direct	0E	6
OR A,[X+expr]	index	0F	7
AND A,expr	data	10	4
AND A,[expr]	direct	11	6
AND A,[X+expr]	index	12	7
XOR A,expr	data	13	4
XOR A,[expr]	direct	14	6
XOR A,[X+expr]	index	15	7
CMP A,expr	data	16	5
CMP A,[expr]	direct	17	7
CMP A,[X+expr]	index	18	8
MOV A,expr	data	19	4
MOV A,[expr]	direct	1A	5
MOV A,[X+expr]	index	1B	6
MOV X,expr	data	1C	4
MOV X,[expr]	direct	1D	5
reserved		1E	
XPAGE		1F	4
MOV A,X		40	4
MOV X,A		41	4
MOV PSP,A		60	4
CALL	addr	50 - 5F	10
JMP	addr	80-8F	5
CALL	addr	90-9F	10
JZ	addr	A0-AF	5
JNZ	addr	B0-BF	5

MNEMONIC	operand	opcode	cycles
NOP		20	4
INC A	acc	21	4
INC X	x	22	4
INC [expr]	direct	23	7
INC [X+expr]	index	24	8
DEC A	acc	25	4
DEC X	x	26	4
DEC [expr]	direct	27	7
DEC [X+expr]	index	28	8
IORD expr	address	29	5
IOWR expr	address	2A	5
POP A		2B	4
POP X		2C	4
PUSH A		2D	5
PUSH X		2E	5
SWAP A,X		2F	5
SWAP A,DSP		30	5
MOV [expr],A	direct	31	5
MOV [X+expr],A	index	32	6
OR [expr],A	direct	33	7
OR [X+expr],A	index	34	8
AND [expr],A	direct	35	7
AND [X+expr],A	index	36	8
XOR [expr],A	direct	37	7
XOR [X+expr],A	index	38	8
IOWX [X+expr]	index	39	6
CPL		3A	4
ASL		3B	4
ASR		3C	4
RLC		3D	4
RRC		3E	4
RET		3F	8
DI		70	4
EI		72	4
RETI		73	8
JC	addr	C0-CF	5
JNC	addr	D0-DF	5
JACC	addr	E0-EF	7
INDEX	addr	F0-FF	14

[+] Feedback

Programming Model

14-Bit Program Counter (PC)

The 14-bit program counter (PC) allows access to up to 8 KB of PROM available with the CY7C64x13C architecture. The top 32 bytes of the ROM in the 8 Kb part are reserved for testing purposes. The program counter is cleared during reset, such that the first instruction executed after a reset is at address 0x0000h. Typically, this is a jump instruction to a reset handler that initializes the application (see Interrupt Vectors on page 27).

The lower eight bits of the program counter are incremented as instructions are loaded and executed. The upper six bits of the program counter are incremented by executing an XPAGE instruction. As a result, the last instruction executed within a 256-byte “page” of sequential code should be an XPAGE instruction. The assembler directive “XPAGEON” causes the assembler to insert XPAGE instructions automatically. Because instructions can be either one or two bytes long, the assembler may occasionally need to insert a NOP followed by an XPAGE to execute correctly.

The address of the next instruction to be executed, the carry flag, and the zero flag are saved as two bytes on the program stack during an interrupt acknowledge or a CALL instruction. The program counter, carry flag, and zero flag are restored from the program stack during a RETI instruction. Only the program counter is restored during a RET instruction.

The program counter cannot be accessed directly by the firmware. The program stack can be examined by reading SRAM from location 0x00 and up.

[+] Feedback

Program Memory Organization

after reset 14-bit PC	Address	
→	0x0000	Program execution begins here after a reset
	0x0002	USB Bus Reset interrupt vector
	0x0004	128-µs timer interrupt vector
	0x0006	1.024-ms timer interrupt vector
	0x0008	USB address A endpoint 0 interrupt vector
	0x000A	USB address A endpoint 1 interrupt vector
	0x000C	USB address A endpoint 2 interrupt vector
	0x000E	USB address A endpoint 3 interrupt vector
	0x0010	USB address A endpoint 4 interrupt vector
	0x0012	Reserved
	0x0014	DAC interrupt vector
	0x0016	GPIO interrupt vector
	0x0018	I^2C interrupt vector
	0x001A	**Program Memory begins here**
	0x1FDF	**8 KB (-32) PROM ends here (CY7C64013C, CY7C64113C)**

[+] Feedback

8-Bit Accumulator (A)

The accumulator is the general-purpose register for the microcontroller.

8-Bit Temporary Register (X)

The "X" register is available to the firmware for temporary storage of intermediate results. The microcontroller can perform indexed operations based on the value in X. Refer to Indexed on page 13 for additional information.

8-Bit Program Stack Pointer (PSP)

During a reset, the program stack pointer (PSP) is set to 0x00 and "grows" upward from this address. The PSP may be set by firmware, using the MOV PSP,A instruction. The PSP supports interrupt service under hardware control and CALL, RET, and RETI instructions under firmware control. The PSP is not readable by the firmware.

During an interrupt acknowledge, interrupts are disabled and the 14-bit program counter, carry flag, and zero flag are written as two bytes of data memory. The first byte is stored in the memory addressed by the PSP, then the PSP is incremented. The second byte is stored in memory addressed by the PSP, and the PSP is incremented again. The overall effect is to store the program counter and flags on the program "stack" and increment the PSP by two.

The Return from Interrupt (RETI) instruction decrements the PSP, then restores the second byte from memory addressed by the PSP. The PSP is decremented again and the first byte is restored from memory addressed by the PSP. After the program counter and flags have been restored from stack, the interrupts are enabled. The overall effect is to restore the program counter and flags from the program stack, decrement the PSP by two, and reenable interrupts.

The Call Subroutine (CALL) instruction stores the program counter and flags on the program stack and increments the PSP by two.

The Return from Subroutine (RET) instruction restores the program counter but not the flags from the program stack and decrements the PSP by two.

Data Memory Organization

The CY7C64x13C microcontrollers provide 256 bytes of data RAM. Normally, the SRAM is partitioned into four areas: program stack, user variables, data stack, and USB endpoint FIFOs. The following is one example of where the program stack, data stack, and user variables areas could be located.

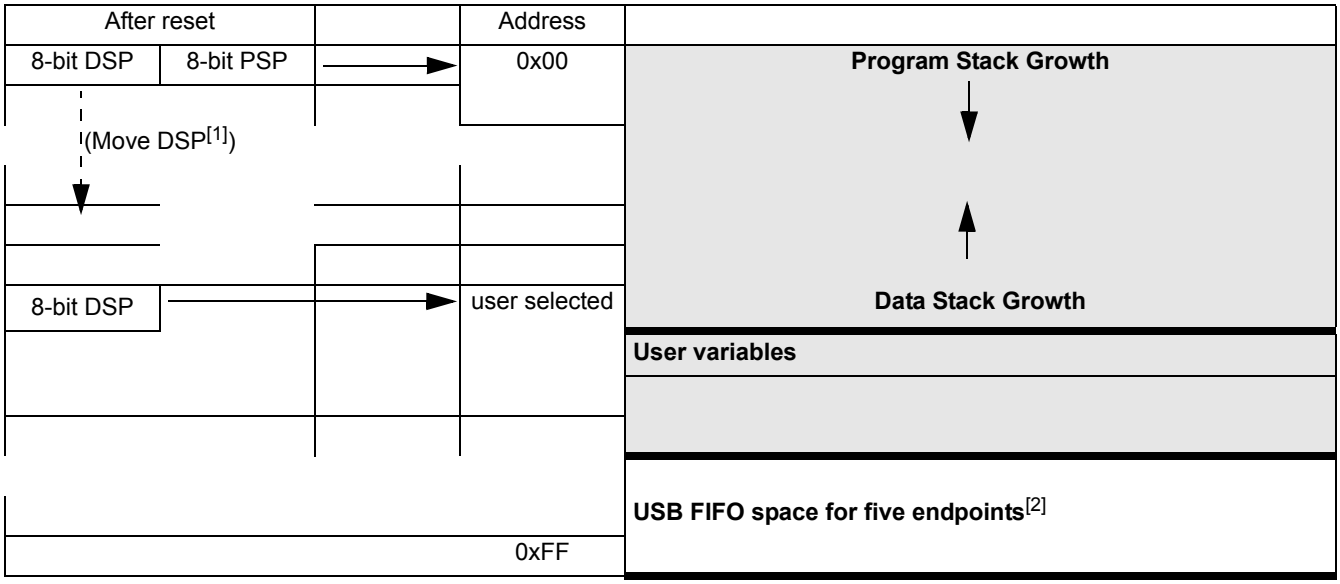

Notes
1. Refer to 8-Bit Data Stack Pointer (DSP) on page 13 for a description of DSP.
2. Endpoint sizes are fixed by the Endpoint Size Bit (I/O register 0x1F, Bit 7), see Table 34 on page 32.

[+] Feedback

8-Bit Data Stack Pointer (DSP)

The data stack pointer (DSP) supports PUSH and POP instructions that use the data stack for temporary storage. A PUSH instruction pre-decrements the DSP, then writes data to the memory location addressed by the DSP. A POP instruction reads data from the memory location addressed by the DSP, then post-increments the DSP.

During a reset, the DSP is reset to 0x00. A PUSH instruction when DSP equals 0x00 writes data at the top of the data RAM (address 0xFF). This writes data to the memory area reserved for USB endpoint FIFOs. Therefore, the DSP should be indexed at an appropriate memory location that does not compromise the Program Stack, user-defined memory (variables), or the USB endpoint FIFOs.

For USB applications, the firmware should set the DSP to an appropriate location to avoid a memory conflict with RAM dedicated to USB FIFOs. The memory requirements for the USB endpoints are described in USB Device Endpoints on page 32. Example assembly instructions to do this with two device addresses (FIFOs begin at 0xD8) are shown below:

```
MOV A,20h     ; Move 20 hex into Accumulator (must be D8h or less)
SWAP A,DSP    ; swap accumulator value into DSP register
```

Address Modes

The CY7C64013C and CY7C64113C microcontrollers support three addressing modes for instructions that require data operands: data, direct, and indexed.

Data (Immediate)

"Data" address mode refers to a data operand that is actually a constant encoded in the instruction. As an example, consider the instruction that loads A with the constant 0xD8:

■ MOV A,0D8h

This instruction requires two bytes of code where the first byte identifies the "MOV A" instruction with a data operand as the second byte. The second byte of the instruction is the constant "0xD8." A constant may be referred to by name if a prior "EQU" statement assigns the constant value to the name. For example, the following code is equivalent to the example shown above:

■ DSPINIT: EQU 0D8h

■ MOV A,DSPINIT

Direct

"Direct" address mode is used when the data operand is a variable stored in SRAM. In that case, the one byte address of the variable is encoded in the instruction. As an example, consider an instruction that loads A with the contents of memory address location 0x10:

■ MOV A,[10h]

Normally, variable names are assigned to variable addresses using "EQU" statements to improve the readability of the assembler source code. As an example, the following code is equivalent to the example shown above:

■ buttons: EQU 10h

■ MOV A,[buttons]

Indexed

"Indexed" address mode allows the firmware to manipulate arrays of data stored in SRAM. The address of the data operand is the sum of a constant encoded in the instruction and the contents of the "X" register. Normally, the constant is the "base" address of an array of data and the X register contains an index that indicates which element of the array is actually addressed:

■ array: EQU 10h

■ MOV X,3

■ MOV A,[X+array]

This would have the effect of loading A with the fourth element of the SRAM "array" that begins at address 0x10. The fourth element would be at address 0x13.

Clocking

Figure 1. Clock Oscillator On-Chip Circuit

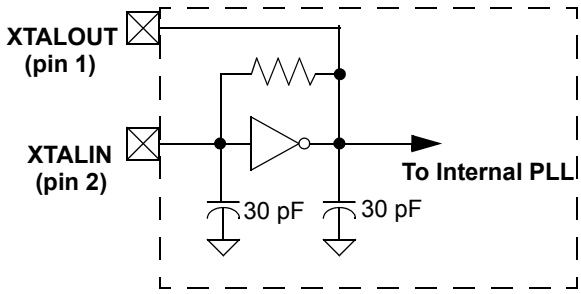

The XTALIN and XTALOUT are the clock pins to the microcontroller. The user can connect an external oscillator or a crystal to these pins. When using an external crystal, keep PCB traces between the chip leads and crystal as short as possible (less than 2 cm). A 6-MHz fundamental frequency parallel resonant crystal can be connected to these pins to provide a reference frequency for the internal PLL. The two internal 30-pF load caps appear in series to the external crystal and would be equivalent to a 15-pF load. Therefore, the crystal must have a required load capacitance of about 15–18 pF. A ceramic

[+] Feedback

resonator does not allow the microcontroller to meet the timing specifications of full speed USB and therefore a ceramic resonator is not recommended with these parts.

An external 6-MHz clock can be applied to the XTALIN pin if the XTALOUT pin is left open. Grounding the XTALOUT pin when driving XTALIN with an oscillator does not work because the internal clock is effectively shorted to ground.

Reset

The CY7C64x13C supports two resets: Power-On Reset (POR) and a Watchdog Reset (WDR). Each of these resets causes:

- all registers to be restored to their default states,
- the USB Device Address to be set to 0,
- all interrupts to be disabled,
- the PSP and Data Stack Pointer (DSP) to be set to memory address 0x00.

The occurrence of a reset is recorded in the Processor Status and Control Register, as described in Processor Status and Control Register on page 25. Bits 4 and 6 are used to record the occurrence of POR and WDR, respectively. Firmware can interrogate these bits to determine the cause of a reset.

Program execution starts at ROM address 0x0000 after a reset. Although this looks like interrupt vector 0, there is an important difference. Reset processing does NOT push the program counter, carry flag, and zero flag onto program stack. The firmware reset handler should configure the hardware before the “main” loop of code. Attempting to execute a RET or RETI in the firmware reset handler causes unpredictable execution results.

Power-On Reset (POR)

When V_{CC} is first applied to the chip, the Power-On Reset (POR) signal is asserted and the CY7C64x13C enters a “semi-suspend” state. During the semi-suspend state, which is different from the suspend state defined in the USB specification, the oscillator and all other blocks of the part are functional, except for the CPU. This semi-suspend time ensures that both a valid V_{CC} level is reached and that the internal PLL has time to stabilize before full operation begins. When the V_{CC} has risen above approximately 2.5 V, and the oscillator is stable, the POR is deasserted and the on-chip timer starts counting. The first 1 ms of suspend time is not interruptible, and the semi-suspend state continues for an additional 95 ms unless the count is bypassed by a USB Bus Reset on the upstream port. The 95 ms provides time for V_{CC} to stabilize at a valid operating voltage before the chip executes code.

If a USB Bus Reset occurs on the upstream port during the 95-ms semi-suspend time, the semi-suspend state is aborted and program execution begins immediately from address 0x0000. In this case, the Bus Reset interrupt is pending but not serviced until firmware sets the USB Bus Reset Interrupt Enable bit (bit 0 of register 0x20) and enables interrupts with the EI command.

The POR signal is asserted whenever V_{CC} drops below approximately 2.5 V, and remains asserted until V_{CC} rises above this level again. Behavior is the same as described above.

Watchdog Reset (WDR)

The Watchdog Timer Reset (WDR) occurs when the internal Watchdog timer rolls over. Writing any value to the write-only Watchdog Restart Register at address 0x26 clears the timer. The timer rolls over and WDR occurs if it is not cleared within t_{WATCH} (8 ms minimum) of the last clear. Bit 6 of the Processor Status and Control Register is set to record this event (the register contents are set to 010X0001 by the WDR). A Watchdog Timer Reset lasts for 2 ms, after which the microcontroller begins execution at ROM address 0x0000.

Figure 2. Watchdog Reset (WDR)

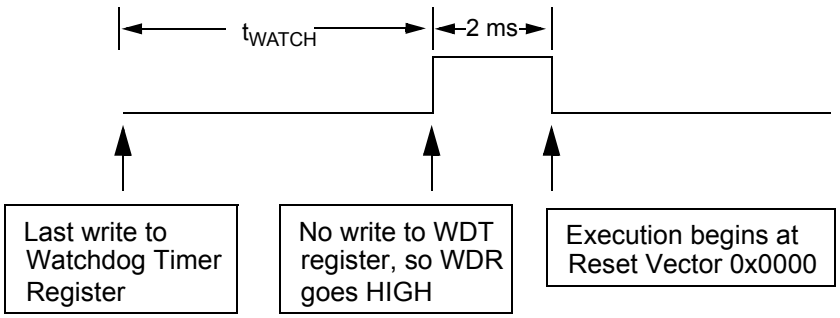

The USB transmitter is disabled by a Watchdog Reset because the USB Device Address Register is cleared. Otherwise, the USB Controller would respond to all address 0 transactions.

It is possible for the WDR bit of the Processor Status and Control Register (0xFF) to be set following a POR event. The WDR bit should be ignored If the firmware interrogates the Processor Status and Control Register for a Set condition on the WDR bit and if the POR (bit 3 of register 0xFF) bit is set.

Suspend Mode

The CY7C64x13C can be placed into a low-power state by setting the Suspend bit of the Processor Status and Control register. All logic blocks in the device are turned off except the GPIO interrupt logic and the USB receiver. The clock oscillator and PLL, as well as the free-running and Watchdog timers, are shut down. Only the occurrence of an enabled GPIO interrupt or non-idle bus activity at a USB upstream or downstream port

[+] Feedback

wakes the part out of suspend. The Run bit in the Processor Status and Control Register must be set to resume a part out of suspend.

The clock oscillator restarts immediately after exiting suspend mode. The microcontroller returns to a fully functional state 1 ms after the oscillator is stable. The microcontroller executes the instruction following the I/O write that placed the device into suspend mode before servicing any interrupt requests.

The GPIO interrupt allows the controller to wake-up periodically and poll system components while maintaining a very low average power consumption. To achieve the lowest possible current during suspend mode, all I/O should be held at V_{CC} or Gnd. This also applies to internal port pins that may not be bonded in a particular package.

Typical code for entering suspend is shown below:

```
...          ; All GPIO set to low-power state (no floating pins)
...          ; Enable GPIO interrupts if desired for wake-up
mov a, 09h   ; Set suspend and run bits
iowr FFh     ; Write to Status and Control Register - Enter suspend, wait for USB activity (or GPIO Interrupt)
nop          ; This executes before any ISR
...          ; Remaining code for exiting suspend routine
```

General-Purpose I/O (GPIO) Ports

Figure 3. Block Diagram of a GPIO Pin

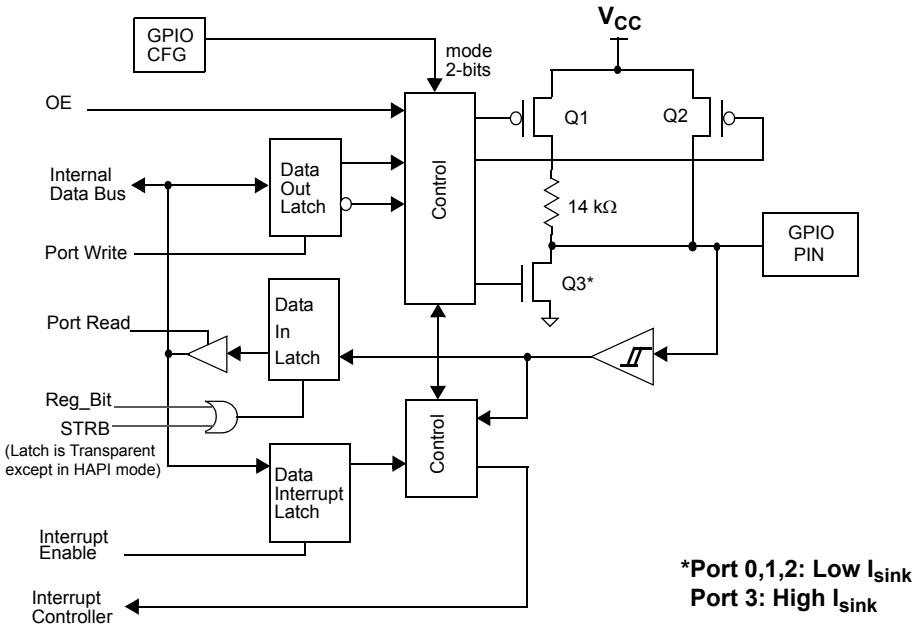

There are up to 32 GPIO pins (P0[7:0], P1[7:0], P2[7:0], and P3[7:0]) for the hardware interface. The number of GPIO pins changes based on the package type of the chip. Each port can be configured as inputs with internal pull-ups, open drain outputs, or traditional CMOS outputs. Port 3 offers a higher current drive, with typical current sink capability of 12 mA. The data for each GPIO port is accessible through the data registers. Port data registers are shown in Table 4 through Table 7, and are set to 1 on reset.

Table 4. Port 0 Data

Port 0 Data **ADDRESS 0x00**

Bit #	7	6	5	4	3	2	1	0
Bit Name	P0.7	P0.6	P0.5	P0.4	P0.3	P0.2	P0.1	P0.0
Read/Write	R/W	R/W	R/W	R/W	R/W	R/W	R/W	R/W
Reset	1	1	1	1	1	1	1	1

[+] Feedback

Table 5. Port 1 Data

Port 1 Data								ADDRESS 0x01
Bit #	7	6	5	4	3	2	1	0
Bit Name	P1.7	P1.6	P1.5	P1.4	P1.3	P1.2	P1.1	P1.0
Read/Write	R/W	R/W	R/W	R/W	R/W	R/W	R/W	R/W
Reset	1	1	1	1	1	1	1	1

Table 6. Port 2 Data

Port 2 Data								ADDRESS 0x02
Bit #	7	6	5	4	3	2	1	0
Bit Name	P2.7	P2.6	P2.5	P2.4	P2.3	P2.2	P2.1	P2.0
Read/Write	R/W	R/W	R/W	R/W	R/W	R/W	R/W	R/W
Reset	1	1	1	1	1	1	1	1

Table 7. Port 3 Data

Port 3 Data								ADDRESS 0x03
Bit #	7	6	5	4	3	2	1	0
Bit Name	P3.7	P3.6	P3.5	P3.4	P3.3	P32	P3.1	P3.0
Read/Write	R/W	R/W	R/W	R/W	R/W	R/W	R/W	R/W
Reset	1	1	1	1	1	1	1	1

Special care should be taken with any unused GPIO data bits. An unused GPIO data bit, either a pin on the chip or a port bit that is not bonded on a particular package, must not be left floating when the device enters the suspend state. If a GPIO data bit is left floating, the leakage current caused by the floating bit may violate the suspend current limitation specified by the USB Specifications. If a ‘1’ is written to the unused data bit and the port is configured with open drain outputs, the unused data bit remains in an indeterminate state. Therefore, if an unused port bit is programmed in open-drain mode, it must be written with a ‘0.’ Notice that the CY7C64013C part always requires that the data bits P1[7:3], P2[7,1,0], and P3[7:3] be written with a ‘0.’

In normal non-HAPI mode, reads from a GPIO port always return the present state of the voltage at the pin, independent of the settings in the Port Data Registers. If HAPI mode is activated for a port, reads of that port return latched data as controlled by the HAPI signals (see Hardware Assisted Parallel Interface (HAPI) on page 24). During reset, all of the GPIO pins are set to a high-impedance input state (‘1’ in open drain mode). Writing a ‘0’ to a GPIO pin drives the pin LOW. In this state, a ‘0’ is always read on that GPIO pin unless an external source overdrives the internal pull-down device.

GPIO Configuration Port

Every GPIO port can be programmed as inputs with internal pull-ups, outputs LOW or HIGH, or Hi-Z (floating, the pin is not driven internally). In addition, the interrupt polarity for each port can be programmed. The Port Configuration bits (Table 8) and the Interrupt Enable bit (Table 10 on page 17 through Table 13 on page 18) determine the interrupt polarity of the port pins.

Table 8. GPIO Configuration Register

GPIO Configuration								ADDRESS 0x08
Bit #	7	6	5	4	3	2	1	0
Bit Name	Port 3 Config Bit 1	Port 3 Config Bit 0	Port 2 Config Bit 1	Port 2 Config Bit 0	Port 1 Config Bit 1	Port 1 Config Bit 0	Port 0 Config Bit 1	Port 0 Config Bit 0
Read/Write	R/W	R/W	R/W	R/W	R/W	R/W	R/W	R/W
Reset	0	0	0	0	0	0	0	0

As shown in Table 9 on page 17 below, a positive polarity on an input pin represents a rising edge interrupt (LOW to HIGH), and a negative polarity on an input pin represents a falling edge interrupt (HIGH to LOW).

The GPIO interrupt is generated when all of the following conditions are met: the Interrupt Enable bit of the associated Port Interrupt Enable Register is enabled, the GPIO Interrupt Enable bit of the Global Interrupt Enable Register (Table 28 on page 26) is enabled, the Interrupt Enable Sense (bit 2, Table 27 on page 25) is set, and the GPIO pin of the port sees an event matching the interrupt polarity.

[+] Feedback

The driving state of each GPIO pin is determined by the value written to the pin's Data Register (Table 4 on page 15 through Table 7 on page 16) and by its associated Port Configuration bits as shown in the GPIO Configuration Register (Table 8 on page 16). These ports are configured on a per-port basis, so all pins in a given port are configured together. The possible port configurations are detailed in Table 9. As shown in this table below, when a GPIO port is configured with CMOS outputs, interrupts from that port are disabled.

During reset, all of the bits in the GPIO Configuration Register are written with '0' to select Hi-Z mode for all GPIO ports as the default configuration.

Table 9. GPIO Port Output Control Truth Table and Interrupt Polarity

Port Config Bit 1	Port Config Bit 0	Data Register	Output Drive Strength	Interrupt Enable Bit	Interrupt Polarity
1	1	0	Output LOW	0	Disabled
		1	Resistive	1	– (Falling Edge)
1	0	0	Output LOW	0	Disabled
		1	Output HIGH	1	Disabled
0	1	0	Output LOW	0	Disabled
		1	Hi-Z	1	– (Falling Edge)
0	0	0	Output LOW	0	Disabled
		1	Hi-Z	1	+ (Rising Edge)

Q1, Q2, and Q3 discussed below are the transistors referenced in Figure 3 on page 15. The available GPIO drive strength are:

- Output LOW Mode: The pin's Data Register is set to '0'

  Writing '0' to the pin's Data Register puts the pin in output LOW mode, regardless of the contents of the Port Configuration Bits[1:0]. In this mode, Q1 and Q2 are OFF. Q3 is ON. The GPIO pin is driven LOW through Q3.

- Output HIGH Mode: The pin's Data Register is set to 1 and the Port Configuration Bits[1:0] is set to '10'

  In this mode, Q1 and Q3 are OFF. Q2 is ON. The GPIO is pulled up through Q2. The GPIO pin is capable of sourcing of current.

- Resistive Mode: The pin's Data Register is set to 1 and the Port Configuration Bits[1:0] is set to '11'

  Q2 and Q3 are OFF. Q1 is ON. The GPIO pin is pulled up with an internal 14 kΩ resistor. In resistive mode, the pin may serve as an input. Reading the pin's Data Register returns a logic HIGH if the pin is not driven LOW by an external source.

- Hi-Z Mode: The pin's Data Register is set to1 and Port Configuration Bits[1:0] is set either '00' or '01'

  Q1, Q2, and Q3 are all OFF. The GPIO pin is not driven internally. In this mode, the pin may serve as an input. Reading the Port Data Register returns the actual logic value on the port pins.

GPIO Interrupt Enable Ports

Each GPIO pin can be individually enabled or disabled as an interrupt source. The Port 0–3 Interrupt Enable registers provide this feature with an interrupt enable bit for each GPIO pin. When HAPI mode (discussed in Hardware Assisted Parallel Interface (HAPI) on page 24) is enabled the GPIO interrupts are blocked, including ports not used by HAPI, so GPIO pins cannot be used as interrupt sources.

During a reset, GPIO interrupts are disabled by clearing all of the GPIO interrupt enable ports. Writing a '1' to a GPIO Interrupt Enable bit enables GPIO interrupts from the corresponding input pin. All GPIO pins share a common interrupt, as discussed in GPIO/HAPI Interrupt on page 29.

Table 10. Port 0 Interrupt Enable

Port 0 Interrupt Enable — **ADDRESS 0x04**

Bit #	7	6	5	4	3	2	1	0
Bit Name	P0.7 Intr Enable	P0.6 Intr Enable	P0.5 Intr Enable	P0.4 Intr Enable	P0.3 Intr Enable	P0.2 Intr Enable	P0.1 Intr Enable	P0.0 Intr Enable
Read/Write	W	W	W	W	W	W	W	W
Reset	0	0	0	0	0	0	0	0

Table 11. Port 1 Interrupt Enable

Port 1 Interrupt Enable — **ADDRESS 0x05**

Bit #	7	6	5	4	3	2	1	0
Bit Name	P1.7 Intr Enable	P1.6 Intr Enable	P1.5 Intr Enable	P1.4 Intr Enable	P1.3 Intr Enabl	P1.2 Intr Enable	P1.1 Intr Enable	P1.0 Intr Enable
Read/Write	W	W	W	W	W	W	W	W
Reset	0	0	0	0	0	0	0	0

[+] Feedback

Table 12. Port 2 Interrupt Enable

Port 2 Interrupt Enable **ADDRESS 0x06**

Bit #	7	6	5	4	3	2	1	0
Bit Name	P2.7 Intr Enable	P2.6 Intr Enable	P2.5 Intr Enable	P2.4 Intr Enable	P2.3 Intr Enable	P2.2 Intr Enable	P2.1 Intr Enable	P2.0 Intr Enable
Read/Write	W	W	W	W	W	W	W	W
Reset	0	0	0	0	0	0	0	0

Table 13. Port 3 Interrupt Enable

Port 3 Interrupt Enable **ADDRESS 0x07**

Bit #	7	6	5	4	3	2	1	0
Bit Name	Reserved (Set to 0)	P3.6 Intr Enable	P3.5 Intr Enable	P3.4 Intr Enable	P3.3 Intr Enable	P3.2 Intr Enable	P3.1 Intr Enable	P3.0 Intr Enable
Read/Write	W	W	W	W	W	W	W	W
Reset	0	0	0	0	0	0	0	0

DAC Port

The CY7C64113C features a programmable current sink 4 bit port which is also known as a DAC port. Each of these port I/O pins have a programmable current sink. Writing a ‘1’ to a DAC I/O pin disables the output current sink (Isink DAC) and drives the I/O pin HIGH through an integrated 14-kΩ resistor. When a ‘0’ is written to a DAC I/O pin, the Isink DAC is enabled and the pull-up resistor is disabled. This causes the I_{sink} DAC to sink current to drive the output LOW. Figure 4 shows a block diagram of the DAC port pin.

[+] Feedback

Figure 4. Block Diagram of a DAC Pin

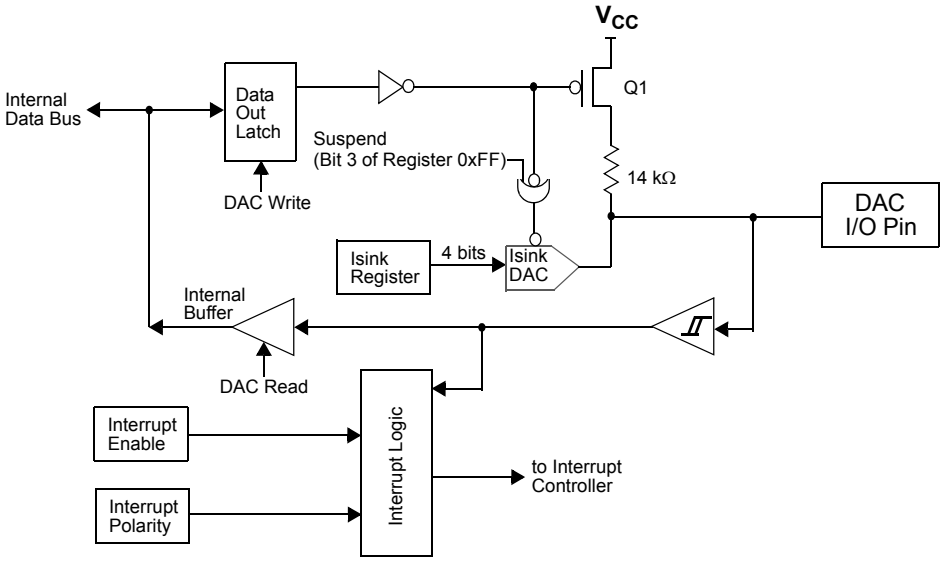

The amount of sink current for the DAC I/O pin is programmable over 16 values based on the contents of the DAC Isink Register for that output pin. DAC[1:0] are high-current outputs that are programmable from 3.2 mA to 16 mA (typical). DAC[7:2] are low-current outputs, programmable from 0.2 mA to 1.0 mA (typical).

When the suspend bit in Processor Status and Control Register (see Table 27 on page 25) is set, the Isink DAC block of the DAC circuitry is disabled. Special care should be taken when the CY7C64x13C device is placed in the suspend mode. The DAC Port Data Register (see Table 14) should normally be loaded with all '1's (0xFF) before setting the suspend bit. If any of the DAC bits are set to '0' when the device is suspended, that DAC input will float. The floating pin could result in excessive current consumption by the device, unless an external load places the pin in a deterministic state.

Table 14. DAC Port Data

DAC Port Data — **ADDRESS 0x30**

Bit #	7	6	5	4	3	2	1	0
Bit Name	DAC[7]	Reserved	Reserved	Reserved	Reserved	DAC[2]	DAC[1]	DAC[0]
Read/Write	R/W	R/W	R/W	R/W	R/W	R/W	R/W	R/W
Reset	1	1	1	1	1	1	1	1

Bit [1..0]: High Current Output 3.2 mA to 16 mA typical

1= I/O pin is an output pulled HGH through the 14-kΩ resistor.

0 = I/O pin is an input with an internal 14-kΩ pull-up resistor

Bit [3..2]: Low Current Output 0.2 mA to 1 mA typical

1= I/O pin is an output pulled HGH through the 14-kΩ resistor.

0 = I/O pin is an input with an internal 14-kΩ pull-up resistor

DAC Isink Registers

Each DAC I/O pin has an associated DAC Isink register to program the output sink current when the output is driven LOW. The first Isink register (0x38) controls the current for DAC[0], the second (0x39) for DAC[1], and so on until the Isink register at 0x3F controls the current to DAC[7].

Table 15. DAC Sink Register

DAC Sink Register — **ADDRESS 0x38 -0x3F**

Bit #	7	6	5	4	3	2	1	0
Bit Name	Reserved	Reserved	Reserved	Reserved	Isink[3]	Isink[2]	Isink[1]	Isink[0]
Read/Write					W	W	W	W
Reset	-	-	-	-	0	0	0	0

[+] Feedback

Bit [4..0]: Isink [x] (x= 0..4)

Writing all ‘0’s to the Isink register causes 1/5 of the max current to flow through the DAC I/O pin. Writing all ‘1’s to the Isink register provides the maximum current flow through the pin. The other 14 states of the DAC sink current are evenly spaced between these two values.

Bit [7..5]: Reserved

DAC Port Interrupts

A DAC port interrupt can be enabled/disabled for each pin individually. The DAC Port Interrupt Enable register provides this feature with an interrupt enable bit for each DAC I/O pin.All of the DAC Port Interrupt Enable register bits are cleared to ‘0’ during a reset. All DAC pins share a common interrupt, as explained in DAC Interrupt on page 29.

Table 16. DAC Port Interrupt Enable

DAC Port Interrupt **ADDRESS 0x31**

Bit #	7	6	5	4	3	2	1	0
Bit Name	Enable Bit 7	Reserved	Reserved	Reserved	Reserved	Enable Bit 2	Enable Bit 1	Enable Bit 0
Read/Write	W	W	W	W	W	W	W	W
Reset	0	0	0	0	0	0	0	0

Bit [7..0]: Enable bit x (x= 0..2, 7)

1= Enables interrupts from the corresponding bit position;

0= Disables interrupts from the corresponding bit position

As an additional benefit, the interrupt polarity for each DAC pin is programmable with the DAC Port Interrupt Polarity register. Writing a ‘0’ to a bit selects negative polarity (falling edge) that causes an interrupt (if enabled) if a falling edge transition occurs on the corresponding input pin. Writing a ‘1’ to a bit in this register selects positive polarity (rising edge) that causes an interrupt (if enabled) if a rising edge transition occurs on the corresponding input pin. All of the DAC Port Interrupt Polarity register bits are cleared during a reset.

Table 17. DAC Port Interrupt Polarity

DAC Port Interrupt Polarity **ADDRESS 0x32**

Bit #	7	6	5	4	3	2	1	0
Bit Name	Enable Bit 7	Reserved	Reserved	Reserved	Reserved	Enable Bit 2	Enable Bit 1	Enable Bit 0
Read/Write	W	W	W	W	W	W	W	W
Reset	0	0	0	0	0	0	0	0

Bit [7..0]: Enable bit x (x= 0..2, 7)

1= Selects positive polarity (rising edge) that causes an interrupt (if enabled);

0= Selects negative polarity (falling edge) that causes an interrupt (if enabled)

12-Bit Free-Running Timer

The 12-bit timer provides two interrupts (128-µs and 1.024-ms) and allows the firmware to directly time events that are up to 4 ms in duration. The lower 8 bits of the timer can be read directly by the firmware. Reading the lower 8 bits latches the upper 4 bits into a temporary register. When the firmware reads the upper 4 bits of the timer, it is accessing the count stored in the temporary register. The effect of this logic is to ensure a stable 12-bit timer value can be read, even when the two reads are separated in time.

Table 18. Timer LSB Register

Timer LSB **ADDRESS 0x24**

Bit #	7	6	5	4	3	2	1	0
Bit Name	Timer Bit 7	Timer Bit 6	Timer Bit 5	Timer Bit 4	Timer Bit 3	Timer Bit 2	Timer Bit 1	Timer Bit 0
Read/Write	R	R	R	R	R	R	R	R
Reset	0	0	0	0	0	0	0	0

[+] Feedback

Bit [7:0]: Timer lower 8 bits

Table 19. Timer MSB Register

Timer MSB **ADDRESS 0x25**

Bit #	7	6	5	4	3	2	1	0
Bit Name	Reserved	Reserved	Reserved	Reserved	Timer Bit 11	Timer Bit 10	Timer Bit 9	Timer Bit 8
Read/Write	-	-	-	-	R	R	R	R
Reset	0	0	0	0	0	0	0	0

Bit [3:0]: Timer higher nibble **Bit [7:4]: Reserved**

Figure 5. Timer Block Diagram

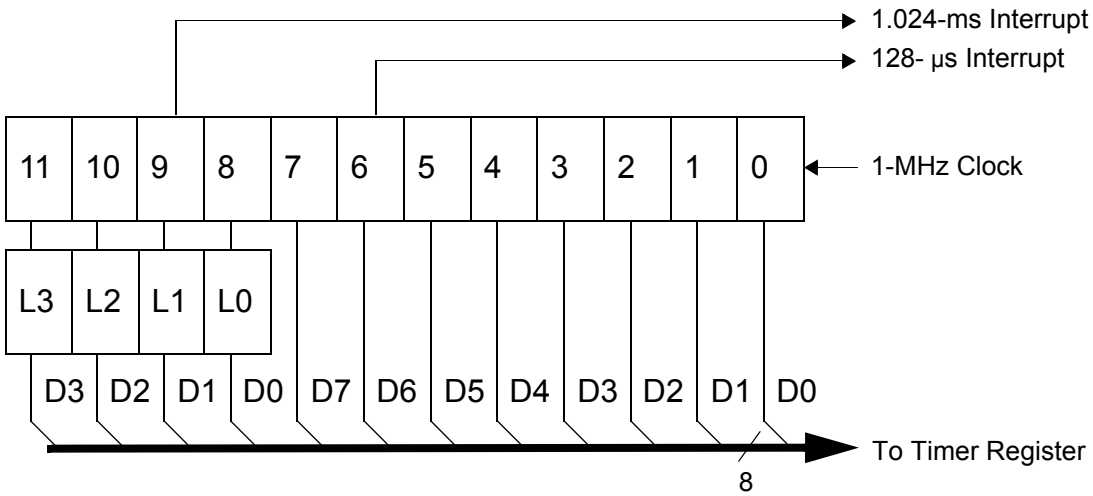

I²C and HAPI Configuration Register

Internal hardware supports communication with external devices through two interfaces: a two-wire I²C-compatible interface, and a HAPI for 1, 2, or 3 byte transfers. The I²C-compatible interface and HAPI functions, discussed in detail in I2C-compatible Controller on page 22 and Hardware Assisted Parallel Interface (HAPI) on page 24, share a common configuration register (see Table 21). All bits of this register are cleared on reset.

Table 20. HAPI/I²C Configuration Register

I²C Configuration **ADDRESS 0x09**

Bit #	7	6	5	4	3	2	1	0
Bit Name	I²C Position	Reserved	LEMPTY Polarity	DRDY Polarity	Latch Empty	Data Ready	HAPI Port Width Bit 1	HAPI Port Width Bit 0
Read/Write	R/W	-	R/W	R/W	R	R	R/W	R/W
Reset	0	0	0	0	0	0	0	0

Note: *I²C-compatible function must be separately enabled as described in I2C-compatible Controller on page 22.*

Bits [7,1:0] of the HAPI/I²C Configuration Register control the pin out configuration of the HAPI and I²C-compatible interfaces. Bits [5:2] are used in HAPI mode only, and are described in Hardware Assisted Parallel Interface (HAPI) on page 24. Table 21 on page 22 shows the HAPI port configurations, and Table 22 on page 22 shows I²C pin location configuration options. These I²C-compatible options exist due to pin limitations in certain packages, and to allow simultaneous HAPI and I²C-compatible operation.

HAPI operation is enabled whenever either HAPI Port Width Bit (Bit 1 or 0) is non-zero. This affects GPIO operation as described in Hardware Assisted Parallel Interface (HAPI) on page 24. I²C-compatible blocks must be separately enabled as described in I2C-compatible Controller on page 22.

[+] Feedback

Table 21. HAPI Port Configuration

Port Width (Bits[1:0])	HAPI Port Width
11	24 Bits: P3[7:0], P1[7:0], P0[7:0]
10	16 Bits: P1[7:0], P0[7:0]
01	8 Bits: P0[7:0]
00	No HAPI Interface

Table 22. I²C Port Configuration

I²C Position (Bit[7])	Port Width (Bit[1])	I²C Position
X	1	I²C on P2[1:0], 0:SCL, 1:SDA
0	0	I²C on P1[1:0], 0:SCL, 1:SDA
1	0	I²C on P2[1:0], 0:SCL, 1:SDA

I²C-compatible Controller

The I²C-compatible block provides a versatile two-wire communication with external devices, supporting master, slave, and multi-master modes of operation. The I²C-compatible block functions by handling the low-level signaling in hardware, and issuing interrupts as needed to allow firmware to take appropriate action during transactions. While waiting for firmware response, the hardware keeps the I²C-compatible bus idle if necessary.

The I²C-compatible block generates an interrupt to the microcontroller at the end of each received or transmitted byte, when a stop bit is detected by the slave when in receive mode, or when arbitration is lost. Details of the interrupt responses are given in I²C Interrupt on page 30.

The I²C-compatible interface consists of two registers, an I²C Data Register (Table 23) and an I²C Status and Control Register (Table 24). The Data Register is implemented as separate read and write registers. Generally, the I²C Status and Control Register should only be monitored after the I²C interrupt, as all bits are valid at that time. Polling this register at other times could read misleading bit status if a transaction is underway.

The I²C SCL clock is connected to bit 0 of GPIO port 1 or GPIO port 2, and the I²C SDA data is connected to bit 1 of GPIO port 1 or GPIO port 2. Refer to I²C and HAPI Configuration Register on page 21 for the bit definitions and functionality of the HAPI/I²C Configuration Register, which is used to set the locations of the configurable I²C-compatible pins. Once the I²C-compatible functionality is enabled by setting bit 0 of the I²C Status & Control Register, the two LSB bits ([1:0]) of the corresponding GPIO port are placed in Open Drain mode, regardless of the settings of the GPIO Configuration Register.The electrical characteristics of the I²C-compatible interface is the same as that of GPIO ports 1 and 2. Note that the I_{OL} (max) is 2 mA @ V_{OL} = 2.0 V for ports 1 and 2.

All control of the I²C clock and data lines is performed by the I²C-compatible block.

Table 23. I²C Data Register

I²C Data **ADDRESS 0x29**

Bit #	7	6	5	4	3	2	1	0
Bit Name	I²C Data 7	I²C Data 6	I²C Data 5	I²C Data 4	I²C Data 3	I²C Data 2	I²C Data 1	I²C Data 0
Read/Write	R/W	R/W	R/W	R/W	R/W	R/W	R/W	R/W
Reset	X	X	X	X	X	X	X	X

Bits [7..0] : I²C Data

Contains the 8 bit data on the I²C Bus

Table 24. I²C Status and Control Register

I²C Status and Control

Bit #	7	6	5	4	3	2	1	0
Bit Name	MSTR Mode	Continue/Busy	Xmit Mode	ACK	Addr	ARB Lost/Restart	Received Stop	I²C Enable
Read/Write	R/W	R/W	R/W	R/W	R/W	R/W	R/W	R/W
Reset	0	0	0	0	0	0	0	0

The I²C Status and Control register bits are defined in Table 26 on page 24, with a more detailed description following.

[+] Feedback

Table 25. I²C Status and Control Register Bit Definitions

Bit	Name	Description
0	I²C Enable	When set to '1', the I²C-compatible function is enabled. When cleared, I²C GPIO pins operate normally.
1	Received Stop	Reads 1 only in slave receive mode, when I²C Stop bit detected (unless firmware did not ACK the last transaction).
2	ARB Lost/Restart	Reads 1 to indicate master has lost arbitration. Reads 0 otherwise. Write to 1 in master mode to perform a restart sequence (also set Continue bit).
3	Addr	Reads 1 during first byte after start/restart in slave mode, or if master loses arbitration. Reads 0 otherwise. This bit should always be written as 0.
4	ACK	In receive mode, write 1 to generate ACK, 0 for no ACK. In transmit mode, reads 1 if ACK was received, 0 if no ACK received.
5	Xmit Mode	Write to 1 for transmit mode, 0 for receive mode.
6	Continue/Busy	Write 1 to indicate ready for next transaction. Reads 1 when I²C-compatible block is busy with a transaction, 0 when transaction is complete.
7	MSTR Mode	Write to 1 for master mode, 0 for slave mode. This bit is cleared if master loses arbitration. Clearing from 1 to 0 generates Stop bit.

Bit 7 : MSTR Mode

Setting this bit to 1 causes the I²C-compatible block to initiate a master mode transaction by sending a start bit and transmitting the first data byte from the data register (this typically holds the target address and R/W bit). Subsequent bytes are initiated by setting the Continue bit, as described below.

Clearing this bit (set to 0) causes the GPIO pins to operate normally

In master mode, the I²C-compatible block generates the clock (SCK), and drives the data line as required depending on transmit or receive state. The I²C-compatible block performs any required arbitration and clock synchronization. IN the event of a loss of arbitration, this MSTR bit is cleared, the ARB Lost bit is set, and an interrupt is generated by the microcontroller. If the chip is the target of an external master that wins arbitration, then the interrupt is held off until the transaction from the external master is completed.

When MSTR Mode is cleared from 1 to 0 by a firmware write, an I²C Stop bit is generated.

Bit 6 : Continue / Busy

This bit is written by the firmware to indicate that the firmware is ready for the next byte transaction to begin. In other words, the bit has responded to an interrupt request and has completed the required update or read of the data register. During a read this bit indicates if the hardware is busy and is locking out additional writes to the I²C Status and Control register. This locking allows the hardware to complete certain operations that may require an extended period of time. Following an I²C interrupt, the I²C-compatible block does not return to the Busy state until firmware sets the Continue bit. This allows the firmware to make one control register write without the need to check the Busy bit.

Bit 5 : Xmit Mode

This bit is set by firmware to enter transmit mode and perform a data transmit in master or slave mode. Clearing this bit sets the part in receive mode. Firmware generally determines the value of this bit from the R/W bit associated with the I²C address packet. The Xmit Mode bit state is ignored when initially writing the MSTR Mode or the Restart bits, as these cases always cause transmit mode for the first byte.

Bit 4 : ACK

This bit is set or cleared by firmware during receive operation to indicate if the hardware should generate an ACK signal on the I²C-compatible bus. Writing a 1 to this bit generates an ACK (SDA LOW) on the I²C-compatible bus at the ACK bit time. During transmits (Xmit Mode = 1), this bit should be cleared.

Bit 3 : Addr

This bit is set by the I²C-compatible block during the first byte of a slave receive transaction, after an I²C start or restart. The Addr bit is cleared when the firmware sets the Continue bit. This bit allows the firmware to recognize when the master has lost arbitration, and in slave mode it allows the firmware to recognize that a start or restart has occurred.

Bit 2 : ARB Lost/Restart

This bit is valid as a status bit (ARB Lost) after master mode transactions. In master mode, set this bit (along with the Continue and MSTR Mode bits) to perform an I²C restart sequence. The I²C target address for the restart must be written to the data register before setting the Continue bit. To prevent false ARB Lost signals, the Restart bit is cleared by hardware during the restart sequence.

[+] Feedback

Bit 1 : Receive Stop

This bit is set when the slave is in receive mode and detects a stop bit on the bus. The Receive Stop bit is not set if the firmware terminates the I^2C transaction by not acknowledging the previous byte transmitted on the I^2C-compatible bus, e.g. in receive mode if firmware sets the Continue bit and clears the ACK bit.

Bit 0 : I^2C Enable

Set this bit to override GPIO definition with I^2C-compatible function on the two I^2C-compatible pins. When this bit is cleared, these pins are free to function as GPIOs. In I^2C-compatible mode, the two pins operate in open drain mode, independent of the GPIO configuration setting.

Hardware Assisted Parallel Interface (HAPI)

The CY7C64x13C processor provides a hardware assisted parallel interface for bus widths of 8, 16, or 24 bits, to accommodate data transfer with an external microcontroller or similar device. Control bits for selecting the byte width are in the HAPI/I^2C Configuration Register (Table 20 on page 21), bits 1 and 0.

Signals are provided on Port 2 to control the HAPI interface. Table 26 describes these signals and the HAPI control bits in the HAPI/I^2C Configuration Register. Enabling HAPI causes the GPIO setting in the GPIO Configuration Register (0x08) to be overridden. The Port 2 output pins are in CMOS output mode and Port 2 input pins are in input mode (open drain mode with Q3 OFF in Figure 3 on page 15).

Table 26. Port 2 Pin and HAPI Configuration Bit Definitions

Pin	Name	Direction	Description (Port 2 Pin)
P2[2]	LatEmptyPin	Out	Ready for more input data from external interface.
P2[3]	DReadyPin	Out	Output data ready for external interface.
P2[4]	$\overline{STB}$	In	Strobe signal for latching incoming data.
P2[5]	$\overline{OE}$	In	Output Enable, causes chip to output data.
P2[6]	$\overline{CS}$	In	Chip Select (Gates $\overline{STB}$ and $\overline{OE}$).
Bit	**Name**	**R/W**	**Description (HAPI/I^2C Configuration Register)**
2	Data Ready	R	Asserted after firmware writes data to Port 0, until $\overline{OE}$ driven LOW.
3	Latch Empty	R	Asserted after firmware reads data from Port 0, until $\overline{STB}$ driven LOW.
4	DRDY Polarity	R/W	Determines polarity of Data Ready bit and DReadyPin: If 0, Data Ready is active LOW, DReadyPin is active HIGH. If 1, Data Ready is active HIGH, DReadyPin is active LOW.
5	LEMPTY Polarity	R/W	Determines polarity of Latch Empty bit and LatEmptyPin: If 0, Latch Empty is active LOW, LatEmptyPin is active HIGH. If 1, Latch Empty is active HIGH, LatEmptyPin is active LOW.

HAPI Read by External Device from CY7C64x13C:

In this case (see Figure 12), firmware writes data to the GPIO ports. If 16-bit or 24-bit transfers are being made, Port 0 should be written last, since writes to Port 0 asserts the Data Ready bit and the DReady Pin to signal the external device that data is available.

The external device then drives the $\overline{OE}$ and $\overline{CS}$ pins active (LOW), which causes the HAPI data to be output on the port pins. When $\overline{OE}$ is returned HIGH (inactive), the HAPI/GPIO interrupt is generated. At that point, firmware can reload the HAPI latches for the next output, again writing Port 0 last.

The Data Ready bit reads the opposite state from the external DReadyPin on pin P2[3]. If the DRDY Polarity bit is 0, DReadyPin is active HIGH, and the Data Ready bit is active LOW.

HAPI Write by External Device to CY7C64x13C:

In this case (see Figure 13 on page 48), the external device drives the $\overline{STB}$ and $\overline{CS}$ pins active (LOW) when it drives new data onto the port pins. When this happens, the internal latches become full, which causes the Latch Empty bit to be deasserted. When $\overline{STB}$ is returned HIGH (inactive), the HAPI/GPIO interrupt is generated. Firmware then reads the parallel ports to empty the HAPI latches. If 16-bit or 24-bit transfers are being made, Port 0 should be read last because reads from Port 0 assert the Latch Empty bit and the LatEmptyPin to signal the external device for more data.

The Latch Empty bit reads the opposite state from the external LatEmptyPin on pin P2[2]. If the LEMPTY Polarity bit is 0, LatEmptyPin is active HIGH, and the Latch Empty bit is active LOW.

[+] Feedback

Processor Status and Control Register

Table 27. Processor Status and Control Register

Processor Status and Control — **ADDRESS 0xFF**

Bit #	7	6	5	4	3	2	1	0
Bit Name	IRQ Pending	Watchdog Reset	USB Bus Reset Interrupt	Power-On Reset	Suspend	Interrupt Enable Sense	Reserved	Run
Read/Write	R	R/W	R/W	R/W	R/W	R	R/W	R/W
Reset	0	0	0	1	0	0	0	1

Bit 0: Run

This bit is manipulated by the HALT instruction. When Halt is executed, all the bits of the Processor Status and Control Register are cleared to 0. Since the run bit is cleared, the processor stops at the end of the current instruction. The processor remains halted until an appropriate reset occurs (power-on or Watchdog). This bit should normally be written as a '1.'

Bit 1: Reserved

Bit 1 is reserved and must be written as a zero.

Bit 2: Interrupt Enable Sense

This bit indicates whether interrupts are enabled or disabled. Firmware has no direct control over this bit as writing a zero or one to this bit position has no effect on interrupts. A '0' indicates that interrupts are masked off and a '1' indicates that the interrupts are enabled. This bit is further gated with the bit settings of the Global Interrupt Enable Register (Table 28 on page 26) and USB End Point Interrupt Enable Register (Table 29 on page 27). Instructions DI, EI, and RETI manipulate the state of this bit.

Bit 3: Suspend

Writing a '1' to the Suspend bit halts the processor and cause the microcontroller to enter the suspend mode that significantly reduces power consumption. A pending, enabled interrupt or USB bus activity causes the device to come out of suspend. After coming out of suspend, the device resumes firmware execution at the instruction following the IOWR which put the part into suspend. An IOWR attempting to put the part into suspend is ignored if USB bus activity is present. See Suspend Mode on page 14 for more details on suspend mode operation.

Bit 4: Power-On Reset

The Power-On Reset is set to '1' during a power-on reset. The firmware can check bits 4 and 6 in the reset handler to determine whether a reset was caused by a power-on condition or a Watchdog timeout. A POR event may be followed by a Watchdog reset before firmware begins executing, as explained below.

Bit 5: USB Bus Reset Interrupt

The USB Bus Reset Interrupt bit is set when the USB Bus Reset is detected on receiving a USB Bus Reset signal on the upstream port. The USB Bus Reset signal is a single-ended zero (SE0) that lasts from 12 to 16 µs. An SE0 is defined as the condition in which both the D+ line and the D– line are LOW at the same time.

Bit 6: Watchdog Reset

The Watchdog Reset is set during a reset initiated by the Watchdog Timer. This indicates the Watchdog Timer went for more than t_{WATCH} (8 ms minimum) between Watchdog clears. This can occur with a POR event, as noted below.

Bit 7: IRQ Pending

The IRQ pending, when set, indicates that one or more of the interrupts has been recognized as active. An interrupt remains pending until its interrupt enable bit is set (Table 28 on page 26, Table 29 on page 27) and interrupts are globally enabled. At that point, the internal interrupt handling sequence clears this bit until another interrupt is detected as pending.

During power-up, the Processor Status and Control Register is set to 00010001, which indicates a POR (bit 4 set) has occurred and no interrupts are pending (bit 7 clear). During the 96 ms suspend at start-up (explained in Power-On Reset (POR) on page 14), a Watchdog Reset also occurs unless this suspend is aborted by an upstream SE0 before 8 ms. If a WDR occurs during the power-up suspend interval, firmware reads 01010001 from the Status and Control Register after power-up. Normally, the POR bit should be cleared so a subsequent WDR can be clearly identified. If an upstream bus reset is received before firmware examines this register, the Bus Reset bit may also be set.

During a Watchdog Reset, the Processor Status and Control Register(Table 27 on page 25) is set to 01XX0001b, which indicates a Watchdog Reset (bit 6 set) has occurred and no interrupts are pending (bit 7 clear). The Watchdog Reset does not effect the state of the POR and the Bus Reset Interrupt bits.

[+] Feedback

Interrupts

Interrupts are generated by the GPIO/DAC pins, the internal timers, I^2C-compatible interface or HAPI operation, or on various USB traffic conditions. All interrupts are maskable by the Global Interrupt Enable Register and the USB End Point Interrupt Enable Register. Writing a '1' to a bit position enables the interrupt associated with that bit position.

Table 28. Global Interrupt Enable Register

Global Interrupt Enable Register **ADDRESS 0X20**

Bit #	7	6	5	4	3	2	1	0
Bit Name	Reserved	I^2C Interrupt Enable	GPIO Interrupt Enable	DAC Interrupt enable	Reserved	1.024-ms Interrupt Enable	128-µs Interrupt Enable	USB Bus RST Interrupt Enable
Read/Write	-	R/W	R/W	-	R/W	R/W	R/W	R/W
Reset	-	0	0	X	0	0	0	0

Bit 0 : USB Bus RST Interrupt Enable

1= Enable Interrupt on a USB Bus Reset; 0 = Disable interrupt on a USB Bus Reset (Refer to USB Bus Reset Interrupt on page 29)

Bit 1 :128-µs Interrupt Enable

1 = Enable Timer interrupt every 128 µs; 0 = Disable Timer Interrupt for every 128 µs.

Bit 2 : 1.024-ms Interrupt Enable

1= Enable Timer interrupt every 1.024 ms; 0 = Disable Timer Interrupt every 1.024 ms.

Bit 3 : Reserved

Bit 4 : DAC Interrupt Enable

1 = Enable DAC Interrupt; 0 = Disable DAC interrupt

Bit 5 : GPIO Interrupt Enable

1 = Enable Interrupt on falling/rising edge on any GPIO; 0 = Disable Interrupt on falling/rising edge on any GPIO (Refer to GPIO Configuration Port on page 16 and GPIO Interrupt Enable Ports on page 17.)

Bit 6 : I^2C Interrupt Enable

1= Enable Interrupt on I2C related activity; 0 = Disable I2C related activity interrupt.
(Refer to I^2C Interrupt on page 30).

Bit 7 : Reserved

[+] Feedback

Table 29. USB Endpoint Interrupt Enable Register

USB Endpoint Interrupt Enable **ADDRESS 0X21**

Bit #	7	6	5	4	3	2	1	0
Bit Name	Reserved	Reserved	Reserved	EPB1 Interrupt Enable	EPB0 Interrupt Enable	EPA2 Interrupt Enable	EPA1 Interrupt Enable	EPA0 Interrupt Enable
Read/Write	-	-	-	R/W	R/W	R/W	R/W	R/W
Reset	-	-	-	0	0	0	0	0

Figure 6. USB Endpoint Interrupt Enable Register

Bit 0: **EPA0 Interrupt Enable**

1= Enable Interrupt on data activity through endpoint A0;
0= Disable Interrupt on data activity through endpoint A0

Bit 1: **EPA1 Interrupt Enable**

1= Enable Interrupt on data activity through endpoint A1;
0= Disable Interrupt on data activity through endpoint A1

Bit 2: **EPA2 Interrupt Enable**

1= Enable Interrupt on data activity through endpoint A2;
0= Disable Interrupt on data activity through endpoint A2.

Bit 3: **EPB0 Interrupt Enable**

1= Enable Interrupt on data activity through endpoint B0;
0= Disable Interrupt on data activity through endpoint B0

Bit 4: **EPB1 Interrupt Enable**

1= Enable Interrupt on data activity through endpoint B1;
0= Disable Interrupt on data activity through endpoint B1

Bit [7..5] : Reserved

During a reset, the contents the Global Interrupt Enable Register and USB End Point Interrupt Enable Register are cleared, effectively, disabling all interrupts

The interrupt controller contains a separate flip-flop for each interrupt. See Figure 7 on page 28 for the logic block diagram of the interrupt controller. When an interrupt is generated, it is first registered as a pending interrupt. It stays pending until it is serviced or a reset occurs. A pending interrupt only generates an interrupt request if it is enabled by the corresponding bit in the interrupt enable registers. The highest priority interrupt request is serviced following the completion of the currently executing instruction.

When servicing an interrupt, the hardware does the following

1. Disables all interrupts by clearing the Global Interrupt Enable bit in the CPU (the state of this bit can be read at Bit 2 of the Processor Status and Control Register, Table 27 on page 25).
2. Clears the flip-flop of the current interrupt.
3. Generates an automatic CALL instruction to the ROM address associated with the interrupt being serviced (i.e., the Interrupt Vector, see Interrupt Vectors).

The instruction in the interrupt table is typically a JMP instruction to the address of the Interrupt Service Routine (ISR). The user can re-enable interrupts in the interrupt service routine by executing an EI instruction. Interrupts can be nested to a level limited only by the available stack space.

The Program Counter value as well as the Carry and Zero flags (CF, ZF) are stored onto the Program Stack by the automatic CALL instruction generated as part of the interrupt acknowledge process. The user firmware is responsible for ensuring that the processor state is preserved and restored during an interrupt. The PUSH A instruction should typically be used as the first command in the ISR to save the accumulator value and the POP A instruction should be used to restore the accumulator value just before the RETI instruction. The program counter CF and ZF are restored and interrupts are enabled when the RETI instruction is executed.

The DI and EI instructions can be used to disable and enable interrupts, respectively. These instructions affect only the Global Interrupt Enable bit of the CPU. If desired, EI can be used to re-enable interrupts while inside an ISR, instead of waiting for the RETI that exists the ISR. While the global interrupt enable bit is cleared, the presence of a pending interrupt can be detected by examining the IRQ Sense bit (Bit 7 in the Processor Status and Control Register).

Interrupt Vectors

The Interrupt Vectors supported by the USB Controller are listed in Table 30 on page 29. The lowest-numbered interrupt (USB Bus Reset interrupt) has the highest priority, and the highest-numbered interrupt (I^2C interrupt) has the lowest priority.

[+] Feedback

Figure 7. Interrupt Controller Function Diagram

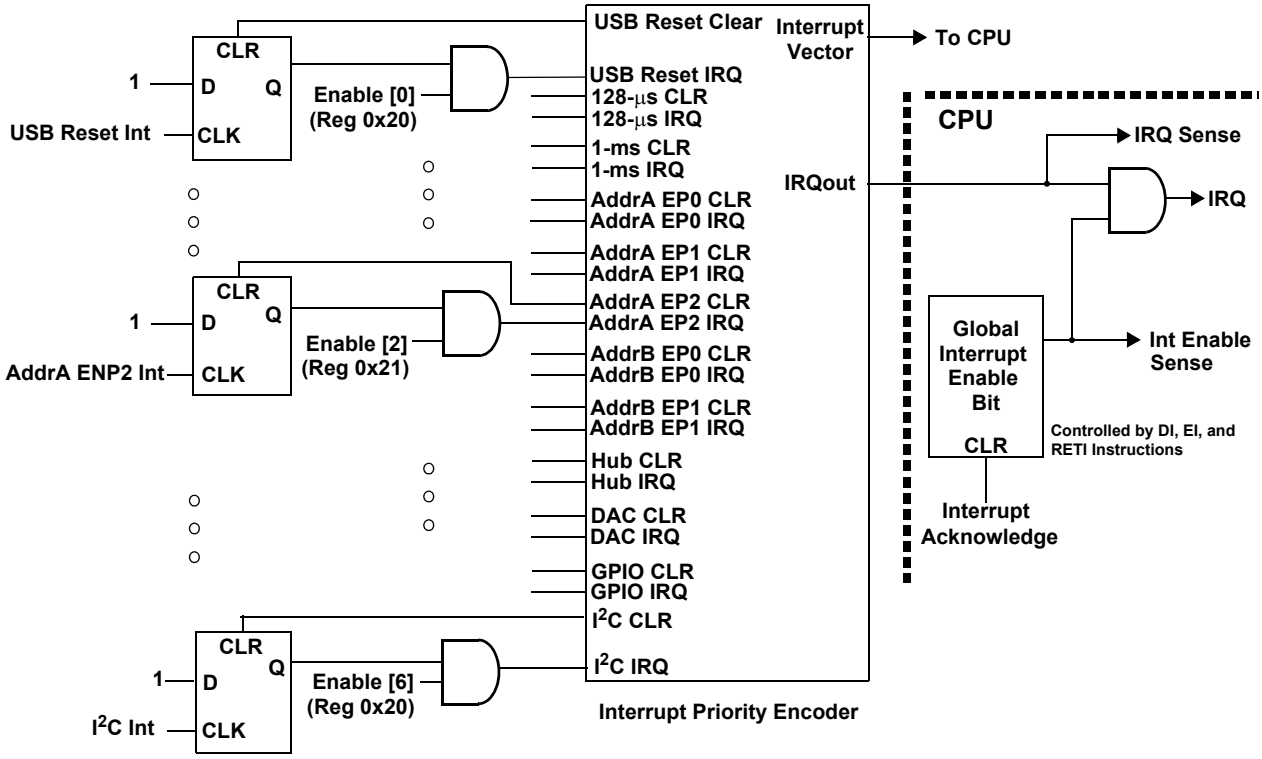

Although Reset is not an interrupt, the first instruction executed after a reset is at PROM address 0x0000h—which corresponds to the first entry in the Interrupt Vector Table. Because the JMP instruction is two bytes long, the interrupt vectors occupy two bytes.

[+] Feedback

Table 30. Interrupt Vector Assignments

Interrupt Vector Number	ROM Address	Function
Not Applicable	0x0000	Execution after Reset begins here
1	0x0002	USB Bus Reset interrupt
2	0x0004	128- µs timer interrupt
3	0x0006	1.024-ms timer interrupt
4	0x0008	USB Address A Endpoint 0 interrupt
5	0x000A	USB Address A Endpoint 1 interrupt
6	0x000C	USB Address A Endpoint 2 interrupt
7	0x000E	USB Address A Endpoint 3 interrupt
8	0x0010	USB Address A Endpoint 4 interrupt
9	0x0012	Reserved
10	0x0014	DAC interrupt
11	0x0016	GPIO interrupt
12	0x0018	I^2C interrupt

Interrupt Latency

Interrupt latency can be calculated from the following equation:

Interrupt latency = (Number of clock cycles remaining in the current instruction) + (10 clock cycles for the CALL instruction) + (5 clock cycles for the JMP instruction)

For example, if a 5 clock cycle instruction such as JC is being executed when an interrupt occurs, the first instruction of the Interrupt Service Routine executes a minimum of 16 clocks (1+10+5) or a maximum of 20 clocks (5+10+5) after the interrupt is issued. For a 12-MHz internal clock (6-MHz crystal), 20 clock periods is 20 / 12 MHz = 1.667 µs.

USB Bus Reset Interrupt

The USB Controller recognizes a USB Reset when a Single Ended Zero (SE0) condition persists on the upstream USB port for 12–16 µs (the Reset may be recognized for an SE0 as short as 12 µs, but is always recognized for an SE0 longer than 16 µs). SE0 is defined as the condition in which both the D+ line and the D– line are LOW. Bit 5 of the Status and Control Register is set to record this event. The interrupt is asserted at the end of the Bus Reset. If the USB reset occurs during the start-up delay following a POR, the delay is aborted as described in Power-On Reset (POR) on page 14. The USB Bus Reset Interrupt is generated when the SE0 state is deasserted.

A USB Bus Reset clears the following registers:

SIE Section:USB Device Address Registers (0x10, 0x40)

Timer Interrupt

There are two periodic timer interrupts: the 128- µs interrupt and the 1.024-ms interrupt. The user should disable both timer interrupts before going into the suspend mode to avoid possible conflicts between servicing the timer interrupts first or the suspend request first.

USB Endpoint Interrupts

There are five USB endpoint interrupts, one per endpoint. A USB endpoint interrupt is generated after the USB host writes to a USB endpoint FIFO or after the USB controller sends a packet to the USB host. The interrupt is generated on the last packet of the transaction (e.g., on the host's ACK during an IN, or on the device ACK during on OUT). If no ACK is received during an IN transaction, no interrupt is generated.

DAC Interrupt

Each DAC I/O pin can generate an interrupt, if enabled. The interrupt polarity for each DAC I/O pin is programmable. A positive polarity is a rising edge input while a negative polarity is a falling edge input. All of the DAC pins share a single interrupt vector, which means the firmware needs to read the DAC port to determine which pin or pins caused an interrupt.

If one DAC pin has triggered an interrupt, no other DAC pins can cause a DAC interrupt until that pin has returned to its inactive (non-trigger) state or the corresponding interrupt enable bit is cleared. The USB Controller does not assign interrupt priority to different DAC pins and the DAC Interrupt Enable Register is not cleared during the interrupt acknowledge process.

GPIO/HAPI Interrupt

Each of the GPIO pins can generate an interrupt, if enabled. The interrupt polarity can be programmed for each GPIO port as part of the GPIO configuration. All of the GPIO pins share a single interrupt vector, which means the firmware needs to read the GPIO ports with enabled interrupts to determine which pin or pins caused an interrupt. A block diagram of the GPIO interrupt logic is shown in Figure 8 on page 30. Refer to GPIO Configuration Port on page 16 and GPIO Interrupt Enable Ports on page 17 for more information of setting GPIO interrupt polarity and enabling individual GPIO interrupts.

If one port pin has triggered an interrupt, no other port pins can cause a GPIO interrupt until that port pin has returned to its inactive (non-trigger) state or its corresponding port interrupt enable bit is cleared. The USB Controller does not assign interrupt priority to different port pins and the Port Interrupt Enable Registers are not cleared during the interrupt acknowledge process.

[+] Feedback

Figure 8. GPIO Interrupt Structure

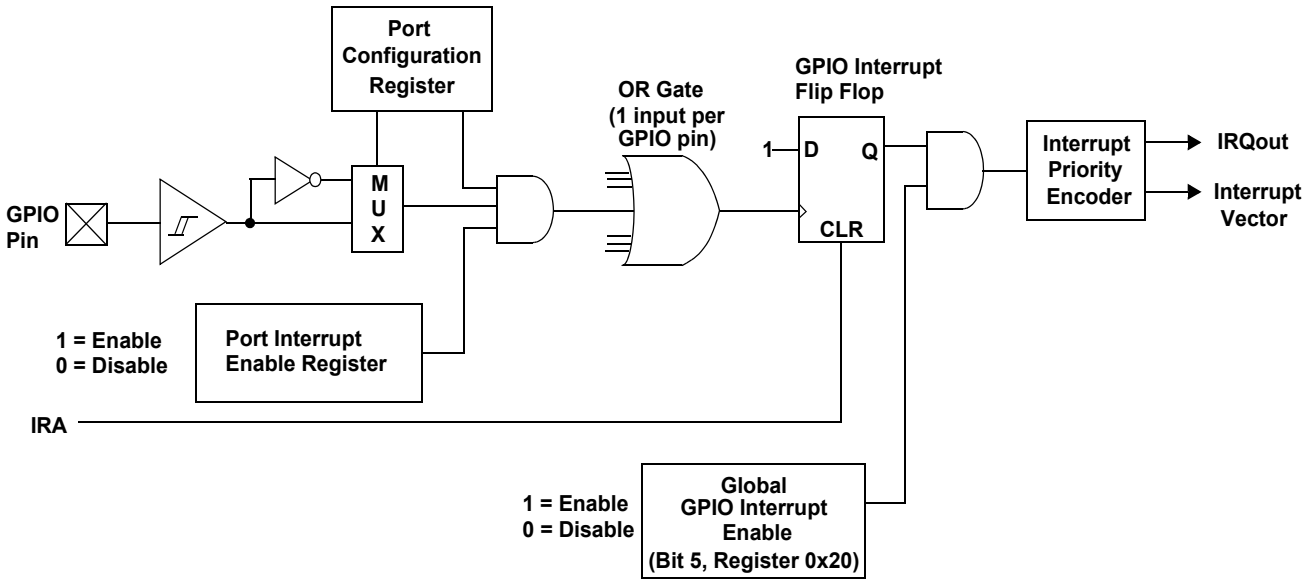

When HAPI is enabled, the HAPI logic takes over the interrupt vector and blocks any interrupt from the GPIO bits, including ports/bits not being used by HAPI. Operation of the HAPI interrupt is independent of the GPIO specific bit interrupt enables, and is enabled or disabled only by bit 5 of the Global Interrupt Enable Register (Table 28 on page 26) when HAPI is enabled. The settings of the GPIO bit interrupt enables on ports/bits not used by HAPI still effect the CMOS mode operation of those ports/bits. The effect of modifying the interrupt bits while the Port Config bits are set to “10” is shown in Table 9. The events that generate HAPI interrupts are described in Hardware Assisted Parallel Interface (HAPI) on page 24.

I^{2}C Interrupt

The I^{2}C interrupt occurs after various events on the I^{2}C-compatible bus to signal the need for firmware interaction. This generally involves reading the I^{2}C Status and Control Register (Table 24 on page 22) to determine the cause of the interrupt, loading/reading the I^{2}C Data Register as appropriate, and finally writing the Status and Control Register to initiate the subsequent transaction. The interrupt indicates that status bits are stable and it is safe to read and write the I^{2}C registers. Refer to I2C-compatible Controller on page 22 for details on the I^{2}C registers.

When enabled, the I^{2}C-compatible state machines generate interrupts on completion of the following conditions. The referenced bits are in the I^{2}C Status and Control Register.

1. In **slave receive** mode, after the slave receives a byte of data: The *Addr* bit is set, if this is the first byte since a start or restart signal was sent by the external master. Firmware must read or write the data register as necessary, then set the *ACK, Xmit MODE,* and *Continue/Busy* bits appropriately for the next byte.
2. In **slave receive** mode, after a stop bit is detected: The *Received Stop* bit is set, if the stop bit follows a slave receive transaction where the *ACK* bit was cleared to 0, no stop bit detection occurs.
3. In **slave transmit** mode, after the slave transmits a byte of data: The *ACK* bit indicates if the master that requested the byte acknowledged the byte. If more bytes are to be sent, firmware writes the next byte into the Data Register and then sets the *Xmit MODE* and *Continue/Busy* bits as required.
4. In **master transmit** mode, after the master sends a byte of data. Firmware should load the Data Register if necessary, and set the *Xmit MODE, MSTR MODE*, and *Continue/Busy* bits appropriately. Clearing the *MSTR MODE* bit issues a stop signal to the I^{2}C-compatible bus and return to the idle state.
5. In **master receive** mode, after the master receives a byte of data: Firmware should read the data and set the *ACK* and *Continue/Busy* bits appropriately for the next byte. Clearing the *MSTR MODE* bit at the same time causes the master state machine to issue a stop signal to the I^{2}C-compatible bus and leave the I^{2}C-compatible hardware in the idle state.
6. When the master loses arbitration: This condition clears the *MSTR MODE* bit and sets the *ARB Lost/Restart* bit immediately and then waits for a stop signal on the I^{2}C-compatible bus to generate the interrupt.

The *Continue/Busy* bit is cleared by hardware prior to interrupt conditions 1 to 4. Once the Data Register has been read or written, firmware should configure the other control bits and set the *Continue/Busy* bit for subsequent transactions. Following an interrupt from master mode, firmware should perform only one write to the Status and Control Register that sets the *Continue/Busy* bit, without checking the value of the *Continue/Busy* bit. The Busy bit may otherwise be active and I^{2}C register contents may be changed by the hardware during the transaction, until the I^{2}C interrupt occurs.

USB Overview

The USB hardware consists of the logic for a full-speed USB Port. The full-speed serial interface engine (SIE) interfaces the microcontroller to the USB bus. An external series resistor (R_{ext}) must be placed in series with the D+ and D– lines, as close to

[+] Feedback

the corresponding pins as possible, to meet the USB driver requirements of the USB specifications.

USB Serial Interface Engine (SIE)

The SIE allows the CY7C64x13C microcontroller to communicate with the USB host. The SIE simplifies the interface between the microcontroller and USB by incorporating hardware that handles the following USB bus activity independently of the microcontroller:

- Bit stuffing/unstuffing
- Checksum generation/checking
- ACK/NAK/STALL
- Token type identification
- Address checking

Firmware is required to handle the following USB interface tasks:

- Coordinate enumeration by responding to SETUP packets
- Fill and empty the FIFOs
- Suspend/Resume coordination
- Verify and select DATA toggle values

USB Enumeration

The USB device is enumerated under firmware control. The following is a brief summary of the typical enumeration process of the CY7C64x13C by the USB host. For a detailed description of the enumeration process, refer to the USB specification.

In this description, 'Firmware' refers to embedded firmware in the CY7C64x13C controller.

1. The host computer sends a SETUP packet followed by a DATA packet to USB address 0 requesting the Device descriptor.
2. Firmware decodes the request and retrieves its Device descriptor from the program memory tables.
3. The host computer performs a control read sequence and Firmware responds by sending the Device descriptor over the USB bus, via the on-chip FIFOs.
4. After receiving the descriptor, the host sends a SETUP packet followed by a DATA packet to address 0 assigning a new USB address to the device.
5. Firmware stores the new address in its USB Device Address Register after the no-data control sequence completes.
6. The host sends a request for the Device descriptor using the new USB address.
7. Firmware decodes the request and retrieves the Device descriptor from program memory tables.
8. The host performs a control read sequence and Firmware responds by sending its Device descriptor over the USB bus.
9. The host generates control reads from the device to request the Configuration and Report descriptors.
10. Once the device receives a Set Configuration request, its functions may now be used.

USB Upstream Port Status and Control

USB status and control is regulated by the USB Status and Control Register, as shown in Table 31. All bits in the register are cleared during reset.

Table 31. USB Status and Control Register

USB Status and Control — **ADDRESS 0x1F**

Bit #	7	6	5	4	3	2	1	0
Bit Name	Endpoint Size	Endpoint Mode	D+ Upstream	D– Upstream	Bus Activity	Control Action Bit 2	Control Action Bit 1	Control Action Bit 0
Read/Write	R/W	R/W	R	R	R/W	R/W	R/W	R/W
Reset	0	0	0	0	0	0	0	0

Bits[2..0] : Control Action

Set to control action as per Table 32.The three control bits allow the upstream port to be driven manually by firmware. For normal USB operation, all of these bits must be cleared. Table 32 shows how the control bits affect the upstream port.

Table 32. Control Bit Definition for Upstream Port

Control Bits	Control Action
000	Not Forcing (SIE Controls Driver)
001	Force D+[0] HIGH, D–[0] LOW
010	Force D+[0] LOW, D–[0] HIGH
011	Force SE0; D+[0] LOW, D–[0] LOW
100	Force D+[0] LOW, D–[0] LOW
101	Force D+[0] HiZ, D–[0] LOW
110	Force D+[0] LOW, D–[0] HiZ
111	Force D+[0] HiZ, D–[0] HiZ

[+] Feedback

Bit 3 : Bus Activity

This is a "sticky" bit that indicates if any non-idle USB event has occurred on the upstream USB port. Firmware should check and clear this bit periodically to detect any loss of bus activity. Writing a '0' to the Bus Activity bit clears it, while writing a '1' preserves the current value. In other words, the firmware can clear the Bus Activity bit, but only the SIE can set it.

Bits 4 and 5 : D– Upstream and D+ Upstream

These bits give the state of each upstream port pin individually: 1 = HIGH, 0 = LOW.

Bit 6 : Endpoint Mode

This bit used to configure the number of USB endpoints. See USB Device Endpoints on page 32 for a detailed description.

Bit 7 : Endpoint Size

This bit used to configure the number of USB endpoints. See USB Device Endpoints on page 32 for a detailed description.

USB Serial Interface Engine Operation

USB Device Address A includes up to five endpoints: EPA0, EPA1, EPA2, EPA3, and EPA4. Endpoint (EPA0) allows the USB host to recognize, set-up, and control the device. In particular, EPA0 is used to receive and transmit control (including set-up) packets.

USB Device Address

The USB Controller provides one USB Device Address with five endpoints. The USB Device Address Register contents are cleared during a reset, setting the USB device address to zero and marking this address as disabled. Table 33 shows the format of the USB Address Registers.

Table 33. USB Device Address Registers

USB Device Address **ADDRESSES 0x10**

Bit #	7	6	5	4	3	2	1	0
Bit Name	Device Address Enable	Device Address Bit 6	Device Address Bit 5	Device Address Bit 4	Device Address Bit 3	Device Address Bit 2	Device Address Bit 1	Device Address Bit 0
Read/Write	R/W	R/W	R/W	R/W	R/W	R/W	R/W	R/W
Reset	0	0	0	0	0	0	0	0

Bits[6..0] :Device Address

Firmware writes this bits during the USB enumeration process to the non-zero address assigned by the USB host.

Bit 7 :Device Address Enable

Must be set by firmware before the SIE can respond to USB traffic to the Device Address.

Bit 7 (Device Address Enable) in the USB Device Address Register must be set by firmware before the SIE can respond to USB traffic to this address. The Device Addresses in bits [6:0] are set by firmware during the USB enumeration process to the non-zero address assigned by the USB host.

USB Device Endpoints

The CY7C64x13C controller supports one USB device address and five endpoints for communication with the host. The configuration of these endpoints, and associated FIFOs, is controlled by bits [7,6] of the USB Status and Control Register (0x1F). Bit 7 controls the size of the endpoints and bit 6 controls the number of endpoints. These configuration options are detailed in Table 34. The "unused" FIFO areas in the following table can be used by the firmware as additional user RAM space.

Table 34. Memory Allocation for Endpoints

USB Status And Control Register (0x1F) Bits [7, 6]											
[0,0]			[1,0]			[0,1]			[1,1]		
Label	Start Address	Size	Label	Start Address	Size	Label	Start Address	Size	Label	Start Address	Size
unused	0xD8	8	unused	0xA8	8	EPA4	0xD8	8	EPA4	0xB0	8
unused	0xE0	8	unused	0xB0	8	EPA3	0xE0	8	EPA3	0xA8	8
EPA2	0xE8	8	EPA0	0xB8	8	EPA2	0xE8	8	EPA0	0xB8	8
EPA1	0xF0	8	EPA1	0xC0	32	EPA1	0xF0	8	EPA1	0xC0	32
EPA0	0xF8	8	EPA2	0xE0	32	EPA0	0xF8	8	EPA2	0xE0	32

When the SIE writes data to a FIFO, the internal data bus is driven by the SIE; not the CPU. This causes a short delay in the CPU operation. The delay is three clock cycles per byte. For example, an 8-byte data write by the SIE to the FIFO generates a delay of 2 µs (3 cycles/byte * 83.33 ns/cycle * 8 bytes).

USB Control Endpoint Mode Register

All USB devices are required to have a Control Endpoint 0 (EPA0) that is used to initialize and control each USB address. Endpoint 0 provides access to the device configuration information and allows generic USB status and control accesses.

[+] Feedback

Endpoint 0 is bidirectional to both receive and transmit data. The other endpoints are unidirectional, but selectable by the user as IN or OUT endpoints.

The endpoint mode register is cleared during reset. The endpoint zero EPA0 mode register uses the format shown in Table 35.

Table 35. USB Device Endpoint Zero Mode Registers

USB Device Endpoint Zero Mode — **ADDRESSES 0x12**

Bit #	7	6	5	4	3	2	1	0
Bit Name	Endpoint 0 SETUP Received	Endpoint 0 IN Received	Endpoint 0 OUT Received	ACK	Mode Bit 3	Mode Bit 2	Mode Bit 1	Mode Bit 0
Read/Write	R/W	R/W	R/W	R/W	R/W	R/W	R/W	R/W
Reset	0	0	0	0	0	0	0	0

Bits[3..0] : Mode

These sets the mode which control how the control endpoint responds to traffic.

Bit 4 : ACK

This bit is set whenever the SIE engages in a transaction to the register's endpoint that completes with an ACK packet.

Bit 5: Endpoint 0 OUT Received

1 = Token received is an OUT token. 0 = Token received is not an OUT token. This bit is set by the SIE to report the type of token received by the corresponding device address is an OUT token. The bit must be cleared by firmware as part of the USB processing.

Bit 6: Endpoint 0 IN Received

1= Token received is an IN token. 0= Token received is not an IN token. This bit is set by the SIE to report the type of token received by the corresponding device address is an IN token. The bit must be cleared by firmware as part of the USB processing.

Bit 7: Endpoint 0 SETUP Received

1= Token received is a SETUP token. 0= Token received is not a SETUP token. This bit is set ONLY by the SIE to report the type of token received by the corresponding device address is a SETUP token. Any write to this bit by the CPU will clear it (set it to 0). The bit is forced HIGH from the start of the data packet phase of the SETUP transaction until the start of the ACK packet returned by the SIE. The CPU should not clear this bit during this interval, and subsequently, until the CPU first does an IORD to this endpoint 0 mode register. The bit must be cleared by firmware as part of the USB processing.

Bits[6:0] of the endpoint 0 mode register are locked from CPU write operations whenever the SIE has updated one of these bits, which the SIE does only at the end of the token phase of a transaction (SETUP... Data... ACK, OUT... Data... ACK, or IN... Data... ACK). The CPU can unlock these bits by doing a subsequent read of this register. Only endpoint 0 mode registers are locked when updated. The locking mechanism does not apply to the mode registers of other endpoints.

Because of these hardware locking features, firmware must perform an IORD after an IOWR to an endpoint 0 register. This verifies that the contents have changed as desired, and that the SIE has not updated these values.

While the SETUP bit is set, the CPU cannot write to the endpoint zero FIFOs. This prevents firmware from overwriting an incoming SETUP transaction before firmware has a chance to read the SETUP data. Refer to Table 34 for the appropriate endpoint zero memory locations.

The Mode bits (bits [3:0]) control how the endpoint responds to USB bus traffic. The mode bit encoding is shown inTable 38. Additional information on the mode bits can be found inTable 39.

USB Non-Control Endpoint Mode Registers

The format of the non-control endpoint mode register is shown in Table 36.

Table 36. USB Non-Control Device Endpoint Mode Registers

USB Non-Control Device Endpoint Mode — **ADDRESSES 0x14, 0x16, 0x42, 0x44**

Bit #	7	6	5	4	3	2	1	0
Bit Name	STALL	Reserved	Reserved	ACK	Mode Bit 3	Mode Bit 2	Mode Bit 1	Mode Bit 0
Read/Write	R/W	R/W	R/W	R/W	R/W	R/W	R/W	R/W
Reset	0	0	0	0	0	0	0	0

Bits[3..0] : Mode

These sets the mode which control how the control endpoint responds to traffic. The mode bit encoding is shown in Table 38

[+] Feedback

Bit 4 : ACK

This bit is set whenever the SIE engages in a transaction to the register's endpoint that completes with an ACK packet.

Bits[6..5] : Reserved

Must be written zero during register writes.

Bit 7 : STALL

If this STALL is set, the SIE stalls an OUT packet if the mode bits are set to ACK-IN, and the SIE stalls an IN packet if the mode bits are set to ACK-OUT. For all other modes, the STALL bit must be a LOW.

USB Endpoint Counter Registers

There are five Endpoint Counter registers, with identical formats for both control and non-control endpoints. These registers contain byte count information for USB transactions, as well as bits for data packet status. The format of these registers is shown in Table 37:

Table 37. USB Endpoint Counter Registers

USB Endpoint Counter **ADDRESSES 0x11, 0x13, 0x15, 0x41, 0x43**

Bit #	7	6	5	4	3	2	1	0
Bit Name	Data 0/1 Toggle	Data Valid	Byte Count Bit 5	Byte Count Bit 4	Byte Count Bit 3	Byte Count Bit 2	Byte Count Bit 1	Byte Count Bit 0
Read/Write	R/W	R/W	R/W	R/W	R/W	R/W	R/W	R/W
Reset	0	0	0	0	0	0	0	0

Bits[5..0] : Byte Count

These counter bits indicate the number of data bytes in a transaction. For IN transactions, firmware loads the count with the number of bytes to be transmitted to the host from the endpoint FIFO. Valid values are 0 to 32, inclusive. For OUT or SETUP transactions, the count is updated by hardware to the number of data bytes received, plus 2 for the CRC bytes. Valid values are 2 to 34, inclusive.

Bit 6 : Data Valid

This bit is set on receiving a proper CRC when the endpoint FIFO buffer is loaded with data during transactions. This bit is used OUT and SETUP tokens only. If the CRC is not correct, the endpoint interrupt occurs, but Data Valid is cleared to a zero.

Bit 7 : Data 0/1 Toggle

This bit selects the DATA packet's toggle state: 0 for DATA0, 1 for DATA1. For IN transactions, firmware must set this bit to the desired state. For OUT or SETUP transactions, the hardware sets this bit to the state of the received Data Toggle bit.

Whenever the count updates from a SETUP or OUT transaction on endpoint 0, the counter register locks and cannot be written by the CPU. Reading the register unlocks it. This prevents firmware from overwriting a status update on incoming SETUP or OUT transactions before firmware has a chance to read the data. Only endpoint 0 counter register is locked when updated. The locking mechanism does not apply to the count registers of other endpoints.

Endpoint Mode/Count Registers Update and Locking Mechanism

The contents of the endpoint mode and counter registers are updated, based on the packet flow diagram in Figure 9. Two time points, UPDATE and SETUP, are shown in the same figure. The following activities occur at each time point:

SETUP:

The SETUP bit of the endpoint 0 mode register is forced HIGH at this time. This bit is forced HIGH by the SIE until the end of the data phase of a control write transfer. The SETUP bit can not be cleared by firmware during this time.

The affected mode and counter registers of endpoint 0 are locked from any CPU writes once they are updated. These registers can be unlocked by a CPU read, only if the read operation occurs after the UPDATE. The firmware needs to perform a register read as a part of the endpoint ISR processing to unlock the effected registers. The locking mechanism on mode and counter registers ensures that the firmware recognizes the changes that the SIE might have made since the previous IO read of that register.

UPDATE:

1. Endpoint Mode Register – All the bits are updated (except the SETUP bit of the endpoint 0 mode register).
2. Counter Registers – All bits are updated.
3. Interrupt – If an interrupt is to be generated as a result of the transaction, the interrupt flag for the corresponding endpoint is set at this time. For details on what conditions are required to generate an endpoint interrupt, refer to Table 39.
4. The contents of the updated endpoint 0 mode and counter registers are locked, except the SETUP bit of the endpoint 0 mode register which was locked earlier.

[+] Feedback

Figure 9. Token/Data Packet Flow Diagram

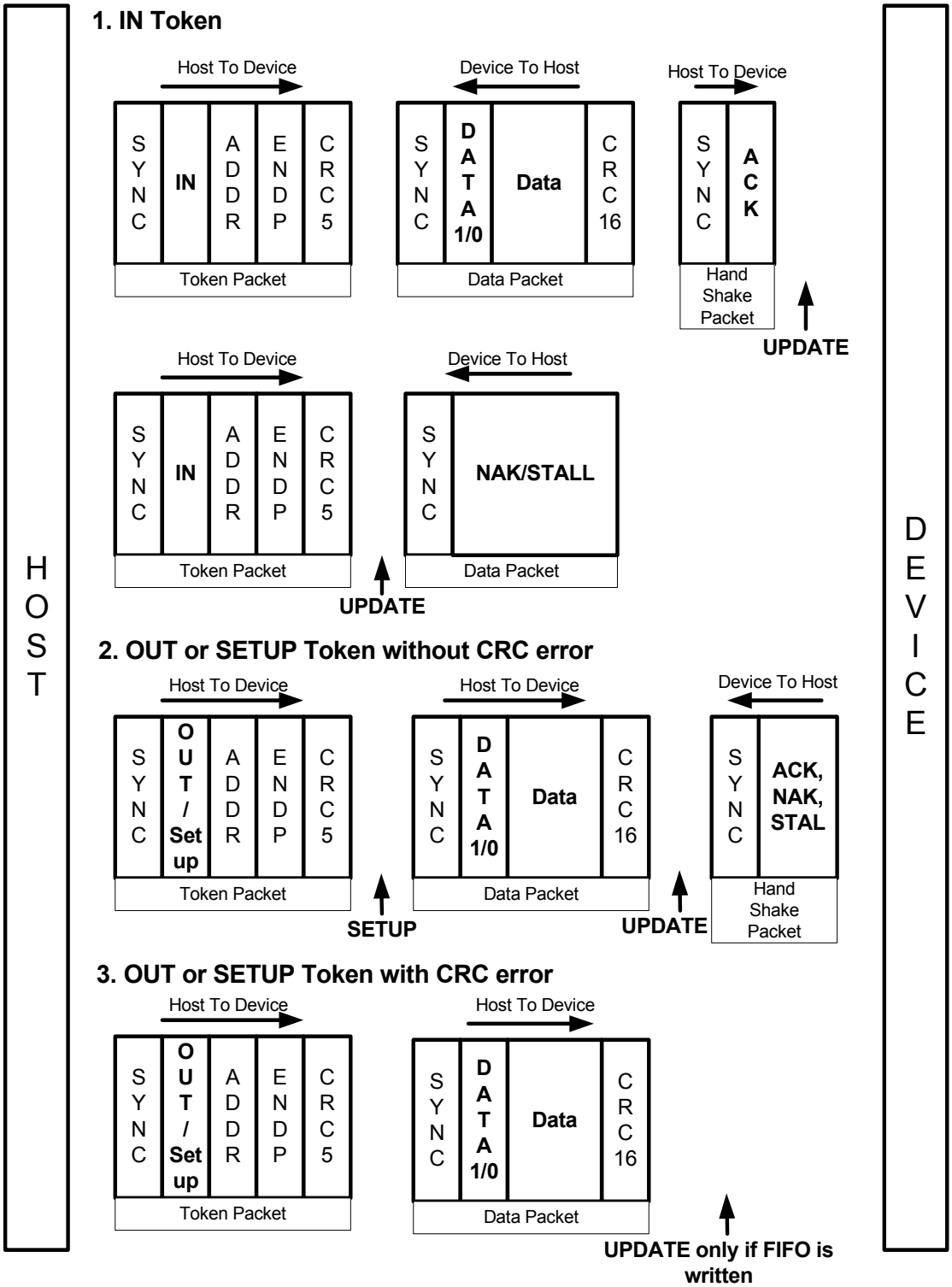

[+] Feedback

USB Mode Tables

Table 38. USB Register Mode Encoding

Mode	Mode Bits	SETUP	IN	OUT	Comments
Disable	0000	ignore	ignore	ignore	Ignore all USB traffic to this endpoint
Nak In/Out	0001	accept	NAK	NAK	Forced from Setup on Control endpoint, from modes other than 0000
Status Out Only	0010	accept	stall	check	For Control endpoints
Stall In/Out	0011	accept	stall	stall	For Control endpoints
Ignore In/Out	0100	accept	ignore	ignore	For Control endpoints
Isochronous Out	0101	ignore	ignore	always	For Isochronous endpoints
Status In Only	0110	accept	TX 0 BYte	stall	For Control Endpoints
Isochronous In	0111	ignore	TX Count	ignore	For Isochronous endpoints
Nak Out	1000	ignore	ignore	NAK	Is set by SIE on an ACK from mode 1001 (Ack Out)
Ack Out(STALL[3]=0) Ack Out(STALL[3]=1)	1001 1001	ignore ignore	ignore ignore	ACK stall	On issuance of an ACK this mode is changed by SIE to 1000 (NAK Out)
Nak Out - Status In	1010	accept	TX 0 BYte	NAK	Is set by SIE on an ACK from mode 1011 (Ack Out- Status In)
Ack Out - Status In	1011	accept	TX 0 BYte	ACK	On issuance of an ACK this mode is changed by SIE to 1010 (NAK Out - Status In)
Nak In	1100	ignore	NAK	ignore	Is set by SIE on an ACK from mode 1101 (Ack In)
Ack IN(STALL[3]=0) Ack IN(STALL[3]=1)	1101 1101	ignore ignore	TX Count stall	ignore ignore	On issuance of an ACK this mode is changed by SIE to 1100 (NAK In)
Nak In - Status Out	1110	accept	NAK	check	Is set by SIE on an ACK from mode 1111 (Ack In - Status Out)
Ack In - Status Out	1111	accept	TX Count	check	On issuance of an ACK this mode is changed by SIE to 1110 (NAK In - Status Out)

Mode

This lists the mnemonic given to the different modes that can be set in the Endpoint Mode Register by writing to the lower nibble (bits 0..3). The bit settings for different modes are covered in the column marked “Mode Bits”. The Status IN and Status OUT represent the Status stage in the IN or OUT transfer involving the control endpoint.

Mode Bits

These column lists the encoding for different modes by setting Bits[3..0] of the Endpoint Mode register. This modes represents how the SIE responds to different tokens sent by the host to an endpoint. For instance, if the mode bits are set to “0001” (NAK IN/OUT), the SIE will respond with an

- ACK on receiving a SETUP token from the host
- NAK on receiving an OUT token from the host
- NAK on receiving an IN token from the host

Refer to I2C-compatible Controller on page 22 for more information on the SIE functioning

SETUP, IN and OUT

These columns shows the SIE’s response to the host on receiving a SETUP, IN and OUT token depending on the mode set in the Endpoint Mode Register.

A “Check” on the OUT token column, implies that on receiving an OUT token the SIE checks to see whether the OUT packet is of zero length and has a Data Toggle (DTOG) set to ‘1.’ If the DTOG bit is set and the received OUT Packet has zero length, the OUT is ACKed to complete the transaction. If either of this condition is not met the SIE will respond with a STALLL or just ignore the transaction.

A “TX Count” entry in the IN column implies that the SIE transmit the number of bytes specified in the Byte Count (bits 3..0 of the Endpoint Count Register) to the host in response to the IN token received.

A “TX0 Byte” entry in the IN column implies that the SIE transmit a zero length byte packet in response to the IN token received from the host.

An “Ignore” in any of the columns means that the device will not send any handshake tokens (no ACK) to the host.

An “Accept” in any of the columns means that the device will respond with an ACK to a valid SETUP transaction tot he host.

Comments

Some Mode Bits are automatically changed by the SIE in response to certain USB transactions. For example, if the Mode Bits [3:0] are set to '1111' which is ACK IN-Status OUT mode, the SIE will change the endpoint Mode Bits [3:0] to NAK IN-Status OUT mode (1110) after ACK’ing a valid status stage OUT token.

[+] Feedback

The firmware needs to update the mode for the SIE to respond appropriately. See Table 34 on page 32 for more details on what modes will be changed by the SIE. A disabled endpoint will remain disabled until changed by firmware, and all endpoints reset to the disabled mode (0000). Firmware normally enables the endpoint mode after a SetConfiguration request.

Any SETUP packet to an enabled endpoint with mode set to accept SETUPs will be changed by the SIE to 0001 (NAKing INs and OUTs). Any mode set to accept a SETUP will send an ACK handshake to a valid SETUP token.

The control endpoint has three status bits for identifying the token type received (SETUP, IN, or OUT), but the endpoint must be placed in the correct mode to function as such. Non-Control endpoints should not be placed into modes that accept SETUPs. Note that most modes that control transactions involving an ending ACK, are changed by the SIE to a corresponding mode which NAKs subsequent packets following the ACK. Exceptions are modes 1010 and 1110.

Note: *The SIE offers an "Ack out–Status in" mode and not an "Ack out–Nak in" mode. Therefore, if following the status stage of a Control Write transfer a USB host were to immediately start the next transfer, the new Setup packet could override the data payload of the data stage of the previous Control Write.*

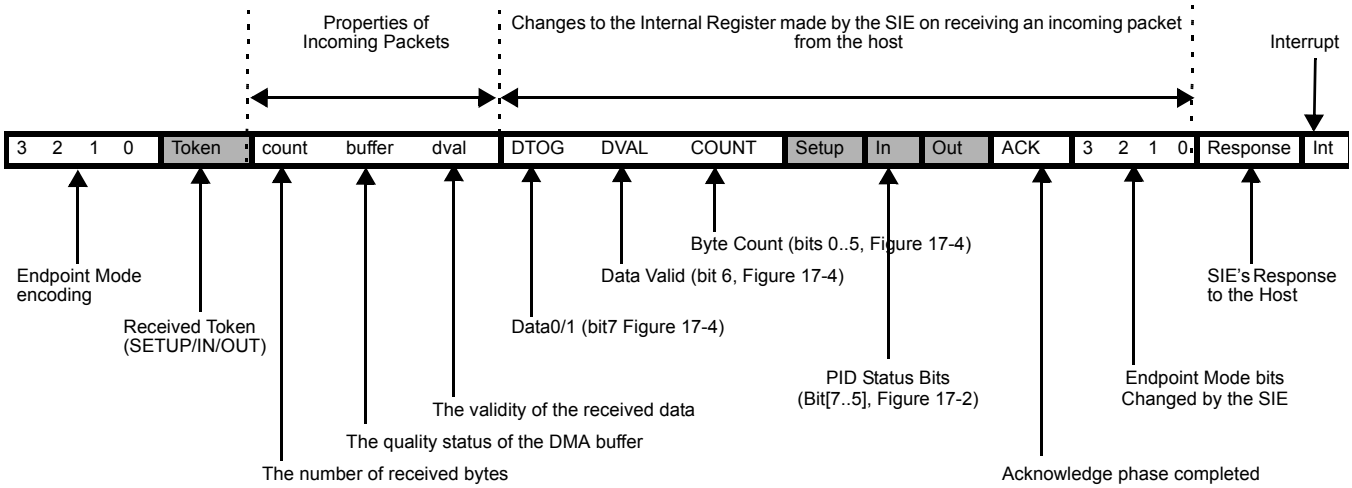

Legend:

TX : transmit	UC : unchanged
RX : receive	TX0 :Transmit 0 length packet
	available for Control endpoint only
x: don't care	

The response of the SIE can be summarized as follows:

1. The SIE will only respond to valid transactions, and will ignore non-valid ones.
2. The SIE will generate an interrupt when a valid transaction is completed or when the FIFO is corrupted. FIFO corruption occurs during an OUT or SETUP transaction to a valid internal address, that ends with a non-valid CRC.
3. An incoming Data packet is valid if the count is ≤ Endpoint Size + 2 (includes CRC) and passes all error checking;
4. An IN will be ignored by an OUT configured endpoint and visa versa.
5. The IN and OUT PID status is updated at the end of a transaction.
6. The SETUP PID status is updated at the beginning of the Data packet phase.
7. The entire Endpoint 0 mode register and the Count register are locked to CPU writes at the end of any transaction to that endpoint in which an ACK is transferred. These registers are only unlocked by a CPU read of the register, which should be done by the firmware only after the transaction is complete. This represents about a 1- µs window in which the CPU is locked from register writes to these USB registers. Normally the firmware should perform a register read at the beginning of the Endpoint ISRs to unlock and get the mode register information. The interlock on the Mode and Count registers ensures that the firmware recognizes the changes that the SIE might have made during the previous transaction. Note that the setup bit of the mode register is NOT locked. This means that before writing to the mode register, firmware must first read the register to make sure that the setup bit is not set (which indicates a setup was received, while processing the current USB request). This read will of course unlock the register. So care must be taken not to overwrite the register elsewhere.

[+] Feedback

Table 39. Details of Modes for Differing Traffic Conditions (see Table 38 for the decode legend)

SETUP (if accepting SETUPs)																		
Properties of Incoming Packet								**Changes made by SIE to Internal Registers and Mode Bits**										
Mode Bits				**token**	**count**	**buffer**	**dval**	**DTOG**	**DVAL**	**COUNT**	**Setup**	**In**	**Out**	**ACK**	**Mode Bits**				**Response**	**Intr**
See Table 38				Setup	<= 10	data	valid	updates	1	updates	1	UC	UC	1	0	0	0	1	ACK	yes
See Table 38				Setup	> 10	junk	x	updates	updates	updates	1	UC	UC	UC	NoChange				ignore	yes
See Table 38				Setup	x	junk	invalid	updates	0	updates	1	UC	UC	UC	NoChange				ignore	yes
Properties of Incoming Packet								**Changes made by SIE to Internal Registers and Mode Bits**										
Mode Bits				**token**	**count**	**buffer**	**dval**	**DTOG**	**DVAL**	**COUNT**	**Setup**	**In**	**Out**	**ACK**	**Mode Bits**				**Response**	**Intr**
DISABLED																				
0	0	0	0	x	x	UC	x	UC	UC	UC	UC	UC	UC	UC	NoChange				ignore	no
Nak In/Out																				
0	0	0	1	Out	x	UC	x	UC	UC	UC	UC	UC	1	UC	NoChange				NAK	yes
0	0	0	1	In	x	UC	x	UC	UC	UC	UC	1	UC	UC	NoChange				NAK	yes
Ignore In/Out																				
0	1	0	0	Out	x	UC	x	UC	UC	UC	UC	UC	UC	UC	NoChange				ignore	no
0	1	0	0	In	x	UC	x	UC	UC	UC	UC	UC	UC	UC	NoChange				ignore	no
Stall In/Out																				
0	0	1	1	Out	x	UC	x	UC	UC	UC	UC	UC	1	UC	NoChange				Stall	yes
0	0	1	1	In	x	UC	x	UC	UC	UC	UC	1	UC	UC	NoChange				Stall	yes
CONTROL WRITE																				
Properties of Incoming Packet								**Changes made by SIE to Internal Registers and Mode Bits**										
Mode Bits				**token**	**count**	**buffer**	**dval**	**DTOG**	**DVAL**	**COUNT**	**Setup**	**In**	**Out**	**ACK**	**Mode Bits**				**Response**	**Intr**
Normal Out/premature status In																				
1	0	1	1	Out	<= 10	data	valid	updates	1	updates	UC	UC	1	1	1	0	1	0	ACK	yes
1	0	1	1	Out	> 10	junk	x	updates	updates	updates	UC	UC	1	UC	NoChange				ignore	yes
1	0	1	1	Out	x	junk	invalid	updates	0	updates	UC	UC	1	UC	NoChange				ignore	yes
1	0	1	1	In	x	UC	x	UC	UC	UC	UC	1	UC	1	NoChange				TX 0	yes
NAK Out/premature status In																				
1	0	1	0	Out	<= 10	UC	valid	UC	UC	UC	UC	UC	1	UC	NoChange				NAK	yes
1	0	1	0	Out	> 10	UC	x	UC	UC	UC	UC	UC	UC	UC	NoChange				ignore	no
1	0	1	0	Out	x	UC	invalid	UC	UC	UC	UC	UC	UC	UC	NoChange				ignore	no
1	0	1	0	In	x	UC	x	UC	UC	UC	UC	1	UC	1	NoChange				TX 0	yes

[+] Feedback

Table 39. Details of Modes for Differing Traffic Conditions (see Table 38 for the decode legend) *(continued)*

Status In/extra Out																				
0	1	1	0	Out	<= 10	UC	valid	UC	UC	UC	UC	UC	1	UC	0	0	1	1	Stall	yes
0	1	1	0	Out	> 10	UC	x	UC	UC	UC	UC	UC	UC	UC	NoChange				ignore	no
0	1	1	0	Out	x	UC	invalid	UC	UC	UC	UC	UC	UC	UC	NoChange				ignore	no
0	1	1	0	In	x	UC	x	UC	UC	UC	UC	1	UC	1	NoChange				TX 0	yes
CONTROL READ																				
Properties of Incoming Packet								**Changes made by SIE to Internal Registers and Mode Bits**												
Mode Bits				**token**	**count**	**buffer**	**dval**	**DTOG**	**DVAL**	**COUNT**	**Setup**	**In**	**Out**	**ACK**	**Mode Bits**				**Response**	**Intr**
Normal In/premature status Out																				
1	1	1	1	Out	2	UC	valid	1	1	updates	UC	UC	1	1	NoChange				ACK	yes
1	1	1	1	Out	2	UC	valid	0	1	updates	UC	UC	1	UC	0	0	1	1	Stall	yes
1	1	1	1	Out	!=2	UC	valid	updates	1	updates	UC	UC	1	UC	0	0	1	1	Stall	yes
1	1	1	1	Out	> 10	UC	x	UC	UC	UC	UC	UC	UC	UC	NoChange				ignore	no
1	1	1	1	Out	x	UC	invalid	UC	UC	UC	UC	UC	UC	UC	NoChange				ignore	no
1	1	1	1	In	x	UC	x	UC	UC	UC	UC	1	UC	1	1	1	1	0	ACK (back)	yes
Nak In/premature status Out																				
1	1	1	0	Out	2	UC	valid	1	1	updates	UC	UC	1	1	NoChange				ACK	yes
1	1	1	0	Out	2	UC	valid	0	1	updates	UC	UC	1	UC	0	0	1	1	Stall	yes
1	1	1	0	Out	!=2	UC	valid	updates	1	updates	UC	UC	1	UC	0	0	1	1	Stall	yes
1	1	1	0	Out	> 10	UC	x	UC	UC	UC	UC	UC	UC	UC	NoChange				ignore	no
1	1	1	0	Out	x	UC	invalid	UC	UC	UC	UC	UC	UC	UC	NoChange				ignore	no
1	1	1	0	In	x	UC	x	UC	UC	UC	UC	1	UC	UC	NoChange				NAK	yes
Status Out/extra In																				
0	0	1	0	Out	2	UC	valid	1	1	updates	UC	UC	1	1	NoChange				ACK	yes
0	0	1	0	Out	2	UC	valid	0	1	updates	UC	UC	1	UC	0	0	1	1	Stall	yes
0	0	1	0	Out	!=2	UC	valid	updates	1	updates	UC	UC	1	UC	0	0	1	1	Stall	yes
0	0	1	0	Out	> 10	UC	x	UC	UC	UC	UC	UC	UC	UC	NoChange				ignore	no
0	0	1	0	Out	x	UC	invalid	UC	UC	UC	UC	1	UC	UC	NoChange				ignore	no
0	0	1	0	In	x	UC	x	UC	UC	UC	UC	1	UC	UC	0	0	1	1	Stall	yes

OUT ENDPOINT															
Properties of Incoming Packet					**Changes made by SIE to Internal Registers and Mode Bits**										
Mode Bits	**token**	**count**	**buffer**	**dval**	**DTOG**	**DVAL**	**COUNT**	**Setup**	**In**	**Out**	**ACK**	**Mode Bits**		**Response**	**Intr**

[+] Feedback

Table 39. Details of Modes for Differing Traffic Conditions (see Table 38 for the decode legend) *(continued)*

Normal Out/erroneous In																			
1	0	0	1	Out	<= 10	data	valid	updates	1	updates	UC	UC	UC	1	1	0	0	0	ACK	yes
1	0	0	1	Out	> 10	junk	x	updates	updates	updates	UC	UC	UC	UC	NoChange				ignore	yes
1	0	0	1	Out	x	junk	invalid	updates	0	updates	UC	UC	UC	UC	NoChange				ignore	yes
1	0	0	1	In	x	UC	x	UC	UC	UC	UC	UC	UC	UC	NoChange				ignore	no
																			(STALL[3] = 0)	
1	0	0	1	In	x	UC	x	UC	UC	UC	UC	UC	UC	UC	NoChange				Stall	no
																			(STALL[3] = 1)	
NAK Out/erroneous In																			
1	0	0	0	Out	<= 10	UC	valid	UC	UC	UC	UC	UC	1	UC	NoChange				NAK	yes
1	0	0	0	Out	> 10	UC	x	UC	UC	UC	UC	UC	UC	UC	NoChange				ignore	no
1	0	0	0	Out	x	UC	invalid	UC	UC	UC	UC	UC	UC	UC	NoChange				ignore	no
1	0	0	0	In	x	UC	x	UC	UC	UC	UC	UC	UC	UC	NoChange				ignore	no
Isochronous endpoint (Out)																			
0	1	0	1	Out	x	updates	updates	updates	updates	updates	UC	UC	1	1	NoChange				RX	yes
0	1	0	1	In	x	UC	x	UC	UC	UC	UC	UC	UC	UC	NoChange				ignore	no
IN ENDPOINT																			
Properties of Incoming Packet								**Changes made by SIE to Internal Registers and Mode Bits**											
Mode Bits				**token**	**count**	**buffer**	**dval**	**DTOG**	**DVAL**	**COUNT**	**Setup**	**In**	**Out**	**ACK**	**Mode Bits**				**Response**	**Intr**
Normal In/erroneous Out																			
1	1	0	1	Out	x	UC	x	UC	UC	UC	UC	UC	UC	UC	NoChange				ignore	no
																			(STALL[3] = 0)	
1	1	0	1	Out	x	UC	x	UC	UC	UC	UC	UC	UC	UC	NoChange				stall	no
																			(STALL[3] = 1)	
1	1	0	1	In	x	UC	x	UC	UC	UC	UC	1	UC	1	1	1	0	0	ACK (back)	yes
NAK In/erroneous Out																			
1	1	0	0	Out	x	UC	x	UC	UC	UC	UC	UC	UC	UC	NoChange				ignore	no
1	1	0	0	In	x	UC	x	UC	UC	UC	UC	1	UC	UC	NoChange				NAK	yes
Isochronous endpoint (In)																			
0	1	1	1	Out	x	UC	x	UC	UC	UC	UC	UC	UC	UC	NoChange				ignore	no
0	1	1	1	In	x	UC	x	UC	UC	UC	UC	1	UC	UC	NoChange				TX	yes

Note:
3. STALL bit is bit 7 of the USB Non-Control Device Endpoint Mode registers. For more information, refer to Sec.

[+] Feedback

Register Summary

	Address	Register Name	Bit 7	Bit 6	Bit 5	Bit 4	Bit 3	Bit 2	Bit 1	Bit 0	Read/Write/Both/-	Default/Reset
GPIO CONFIGURATION PORTS 0, 1, 2 AND 3	0x00	Port 0 Data	P0.7	P0.6	P0.5	P0.4	P0.3	P0.2	P0.1	P0.0	bbbbbbbb	11111111
	0x01	Port 1 Data	P1.7	P1.6	P1.5	P1.4	P1.3	P1.2	P1.1	P1.0	bbbbbbbb	11111111
	0x02	Port 2 Data	P2.7	P2.6	P2.5	P2.4	P2.3	P2.2	P2.1	P2.0	bbbbbbbb	11111111
	0x03	Port 3 Data	P3.7	P3.6	P3.5	P3.4	P3.3	P3.2	P3.1	P3.0	bbbbbbbb	11111111
	0x04	Port 0 Interrupt Enable	P0.7 Intr Enable	P0.6 Intr Enable	P0.5 Intr Enable	P0.4 Intr Enable	P0.3 Intr Enable	P0.2 Intr Enable	P0.1 Intr Enable	P0.0 Intr Enable	wwwwwwww	00000000
	0x05	Port 1 Interrupt Enable	P1.7 Intr Enable	P1.6 Intr Enable	P1.5 Intr Enable	P1.4 Intr Enable	Reserved	P1.2 Intr Enable	P1.1 Intr Enable	P1.0 Intr Enable	wwwwwwww	00000000
	0x06	Port 2 Interrupt Enable	P2.7 Intr Enable	P2.6 Intr Enable	P2.5 Intr Enable	P2.4 Intr Enable	P2.3 Intr Enable	Reserved	Reserved	Reserved	wwwwwwww	00000000
	0x07	Port 3 Interrupt Enable	Reserved	Reserved	Reserved	Reserved	Reserved	Reserved	P3.1 Intr Enable	P3.0 Intr Enable	wwwwwwww	00000000
	0x08	GPIO Configuration	Port 3 Config Bit 1	Port 3 Config Bit 0	Port 2 Config Bit 1	Port 2 Config Bit 0	Port 1 Config Bit 1	Port 1 Config Bit 0	Port 0 Config Bit 1	Port 0 Config Bit 0	bbbbbbbb	00000000
HAPI	0x09	HAPI/I^2C Configuration	I^2C Position	Reserved	Reserved	Reserved	Reserved	Reserved	I^2C Port Width	Reserved	bbbbbbbb	00000000
ENDPOINT A0, AI AND A2	0x10	USB Device Address A	Device Address A Enable	Device Address A Bit 6	Device Address A Bit 5	Device Address A Bit 4	Device Address A Bit 3	Device Address A Bit 2	Device Address A Bit 1	Device Address A Bit 0	bbbbbbbb	00000000
	0x11	EP A0 Counter Register	Data 0/1 Toggle	Data Valid	Byte Count Bit 5	Byte Count Bit 4	Byte Count Bit 3	Byte Count Bit 2	Byte Count Bit 1	Byte Count Bit 0	bbbbbbbb	00000000
	0x12	EP A0 Mode Register	Endpoint0 SETUP Received	Endpoint0 IN Received	Endpoint0 OUT Received	ACK	Mode Bit 3	Mode Bit 2	Mode Bit 1	Mode Bit 0	bbbbbbbb	00000000
	0x13	EP A1 Counter Register	Data 0/1 Toggle	Data Valid	Byte Count Bit 5	Byte Count Bit 4	Byte Count Bit 3	Byte Count Bit 2	Byte Count Bit 1	Byte Count Bit 0	bbbbbbbb	00000000
	0x14	EP A1 Mode Register	STALL	-	-	ACK	Mode Bit 3	Mode Bit 2	Mode Bit 1	Mode Bit 0	bbbbbbbb	00000000
	0x15	EP A2 Counter Register	Data 0/1 Toggle	Data Valid	Byte Count Bit 5	Byte Count Bit 4	Byte Count Bit 3	Byte Count Bit 2	Byte Count Bit 1	Byte Count Bit 0	bbbbbbbb	00000000
	0x16	EP A2 Mode Register	STALL	-	-	ACK	Mode Bit 3	Mode Bit 2	Mode Bit 1	Mode Bit 0	bbbbbbbb	00000000

[+] Feedback

Register Summary *(continued)*

	Address	Register Name	Bit 7	Bit 6	Bit 5	Bit 4	Bit 3	Bit 2	Bit 1	Bit 0	Read/Write/Both/-	Default/Reset
USB	0x1F	USB Status and Control	Endpoint Size	Endpoint Mode	D+ Upstream	D– Upstream	Bus Activity	Control Bit 2	Control Bit 1	Control Bit 0	bbrrbbbb	-0xx0000
INTERRUPT	0x20	Global Interrupt Enable	Reserved	I^2C Interrupt Enable	GPIO Interrupt Enable	Reserved	USB Hub Interrupt Enable	1.024-ms Interrupt Enable	128-µs Interrupt Enable	USB Bus RESET Interrupt Enable	-bbbbbbb	-0000000
	0x21	Endpoint Interrupt Enable	Reserved	Reserved	Reserved	EPB1 Interrupt Enable	EPB0 Interrupt Enable	EPA2 Interrupt Enable	EPA1 Interrupt Enable	EPA0 Interrupt Enable	---bbbbb	---00000
TIMER	0x24	Timer (LSB)	Timer Bit 7	Timer Bit 6	Timer Bit 5	Timer Bit 4	Timer Bit 3	Timer Bit 2	Timer Bit 1	Timer Bit 0	rrrrrrrr	00000000
	0x25	Timer (MSB)	Reserved	Reserved	Reserved	Reserved	Timer Bit 11	Timer Bit 10	Time Bit 9	Timer Bit 8	----rrrr	----0000
	0x26	WDT Clear	x	x6	x	x	x 3	x2	x	x	wwwwwwww	xxxxxxxx
I^2C	0x28	I^2C Control and Status	MSTR Mode	Continue/ Busy	Xmit Mode	ACK	Addr	ARB Lost/ Restart	Received Stop	I^2C Enable	bbbbbbbb	00000000
	0x29	I^2C Data	I^2C Data 7	I^2C Data 6	I^2C Data 5	I^2C Data 4	I^2C Data 3	I^2C Data 2	I^2C Data 1	I^2C Data 0	bbbbbbbb	xxxxxxxx
DAC PORT	0x30	DAC Data	Timer Bit 7	Timer Bit 6	Timer Bit 5	Timer Bit 4	Timer Bit 3	Timer Bit 2	Timer Bit 1	Timer Bit 0	rrrrrrrr	00000000
	0x31	DAC Interrupt Enable)	Reserved	Reserved	Reserved	Reserved	Timer Bit 11	Timer Bit 10	Time Bit 9	Timer Bit 8	----rrrr	----0000
	0x32	DAC Interrupt Polarity										
	0x38-0x3F	DAS Isink	x	x6	x	x	x 3	x2	x	x	wwwwwwww	
ENDPOINT A3, A4	0x40	Reserved	Reserved	Reserved	Reserved	Reserved	Reserved	Reserved	Reserved	Reserved	bbbbbbbb	00000000
	0x41	EP A3 Counter Register	Data 0/1 Toggle	Data Valid	Byte Count Bit 5	Byte Count Bit 4	Byte Count Bit 3	Byte Count Bit 2	Byte Count Bit 1	Byte Count Bit 0	bbbbbbbb	00000000
	0x42	EP A3 Mode Register	Endpoint 0 SETUP Received	Endpoint 0 IN Received	Endpoint 0 OUT Received	ACK	Mode Bit 3	Mode Bit 2	Mode Bit 1	Mode Bit 0	bbbbbbbb	00000000
	0x43	EP A4 Counter Register	Data 0/1 Toggle	Data Valid	Byte Count Bit 5	Byte Count Bit 4	Byte Count Bit 3	Byte Count Bit 2	Byte Count Bit 1	Byte Count Bit 0	bbbbbbbb	00000000
	0x44	EP A4 Mode Register	STALL	-	-	ACK	Mode Bit 3	Mode Bit 2	Mode Bit 1	Mode Bit 0	bbbbbbbb	00000000

[+] Feedback

Register Summary *(continued)*

	Address	Register Name	Bit 7	Bit 6	Bit 5	Bit 4	Bit 3	Bit 2	Bit 1	Bit 0	Read/Write/Both/-	Default/Reset
RESERVED	0x48	Reserved	Reserved	Reserved	Reserved	Reserved	Reserved	Reserved	Reserved	Reserved	Reserved	00000000
	0x49	Reserved	Reserved	Reserved	Reserved	Reserved	Reserved	Reserved	Reserved	Reserved	Reserved	00000000
	0x4A	Reserved	Reserved	Reserved	Reserved	Reserved	Reserved	Reserved	Reserved	Reserved	Reserved	00000000
	0x4B	Reserved	Reserved	Reserved	Reserved	Reserved	Reserved	Reserved	Reserved	Reserved	Reserved	00000000
	0x4C	Reserved	Reserved	Reserved	Reserved	Reserved	Reserved	Reserved	Reserved	Reserved	Reserved	--000000
	0x4D	Reserved	Reserved	Reserved	Reserved	Reserved	Reserved	Reserved	Reserved	Reserved	Reserved	00000000
	0x4E	Reserved	Reserved	Reserved	Reserved	Reserved	Reserved	Reserved	Reserved	Reserved	Reserved	00000000
	0x4F	Reserved	Reserved	Reserved	Reserved	Reserved	Reserved	Reserved	Reserved	Reserved	Reserved	00000000
	0x50	Reserved	Reserved	Reserved	Reserved	Reserved	Reserved	Reserved	Reserved	Reserved	Reserved	00000000
	0x51	Reserved	Reserved	Reserved	Reserved	Reserved	Reserved	Reserved	Reserved	Reserved	Reserved	00000000
	0x52	Reserved	Reserved	Reserved	Reserved	Reserved	Reserved	Reserved	Reserved	Reserved	Reserved	00000000
	0xFF	Process Status & Control	IRQ Pending	Watchdog Reset	USB Bus Reset Interrupt	Power-On Reset	Suspend	Interrupt Enable Sense	Reserved	Run	rbbbbrbb	00010001

Note:

B: Read and Write

W: Write

R: Read

[+] Feedback

Sample Schematic

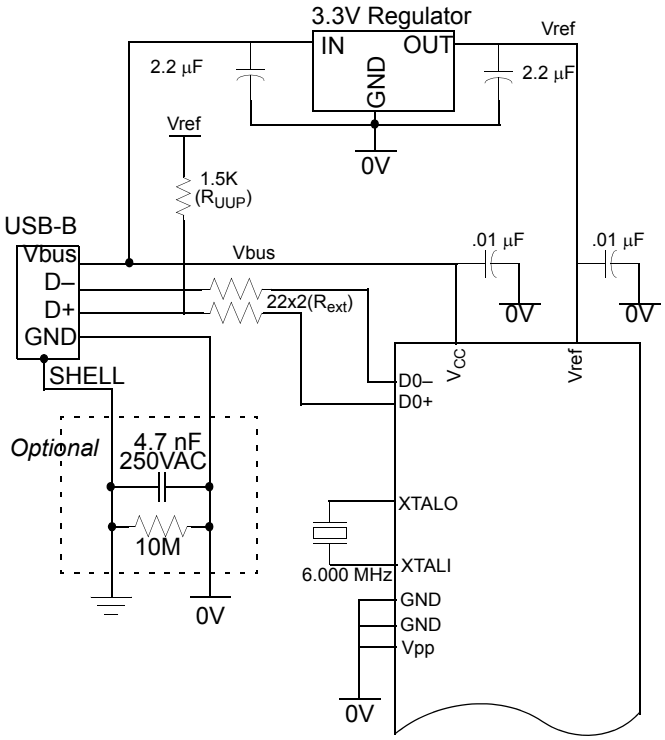

[+] Feedback

Absolute Maximum Ratings

Storage temperature ..... –65 °C to +150 °C

Ambient temperature with power applied ..... 0 °C to +70 °C

Supply voltage on V_{CC} relative to V_{SS}.....–0.5 V to +7.0 V

DC input voltage ..... –0.5 V to V_{CC} + 0.5 V

DC Voltage Applied to Outputs in High Z State..... –0.5 V to V_{CC} + 0.5 V

Power Dissipation..... 500 mW

Static discharge voltage (MIL-STD-883, M 3015)... > 2000 V

Latch up current..... > 200 mA

Max Output Sink Current into Port 0, 1, 2, 3, and DAC[1:0] Pins ..... 60 mA

Max Output Sink Current into DAC[7:2] Pins ..... 10 mA

Electrical Characteristics

f_{OSC} = 6 MHz; Operating Temperature = 0 °C to 70 °C, V_{CC} = 4.0 V to 5.25 V

Parameter	Description	Conditions	Min	Max	Unit
	General				
V_{REF}	Reference Voltage	3.3 V ±5%	3.15	3.45	V
V_{pp}	Programming Voltage (disabled)		–0.4	0.4	V
I_{CC}	V_{CC} Operating Current	No GPIO source current	–	50	mA
I_{SB1}	Supply Current—Suspend Mode		–	50	µA
I_{ref}	V_{REF} Operating Current	Note 5	–	30	mA
I_{il}	Input Leakage Current	Any pin	–	1	µA
	USB Interface				
V_{di}	Differential Input Sensitivity	| (D+)–(D–) |	0.2	–	V
V_{cm}	Differential Input Common Mode Range		0.8	2.5	V
V_{se}	Single Ended Receiver Threshold		0.8	2.0	V
C_{in}	Transceiver Capacitance		–	20	pF
I_{lo}	Hi-Z State Data Line Leakage	0 V < V_{in} < 3.3 V	–10	10	µA
R_{ext}	External USB Series Resistor	In series with each USB pin	19	21	Ω
R_{UUP}	External Upstream USB Pull-up Resistor	1.5 kΩ ±5%, D+ to V_{REG}	1.425	1.575	kΩ
	Power On Reset				
t_{vccs}	V_{CC} Ramp Rate	Linear ramp 0V to V_{CC}[4]	0	100	ms
	USB Upstream				
V_{UOH}	Static Output High	15 kΩ ±5% to Gnd	2.8	3.6	V
V_{UOL}	Static Output Low	1.5 kΩ ±5% to V_{REF}	–	0.3	V
Z_O	USB Driver Output Impedance	Including R_{ext} Resistor	28	44	Ω
	General Purpose I/O (GPIO)				
R_{up}	Pull-up Resistance (typical 14 kΩ)		8.0	24.0	kΩ
V_{ITH}	Input Threshold Voltage	All ports, LOW to HIGH edge	20%	40%	V_{CC}
V_H	Input Hysteresis Voltage	All ports, HIGH to LOW edge	2%	8%	V_{CC}
V_{OL}	Port 0,1,2,3 Output Low Voltage	I_{OL} = 3 mA I_{OL} = 8 mA	–	0.4 2.0	V V
V_{OH}	Output High Voltage	I_{OH} = 1.9 mA (all ports 0,1,2,3)	2.4	–	V

Notes
4. Power-on Reset occurs whenever the voltage on V_{CC} is below approximately 2.5 V.
5. This is based on transitions every 2 full-speed bit times on average.

[+] Feedback

Electrical Characteristics *(continued)*

f_{OSC} = 6 MHz; Operating Temperature = 0 °C to 70 °C, V_{CC} = 4.0 V to 5.25 V

Parameter	Description	Conditions	Min	Max	Unit
	DAC Interface				
R_{up}	DAC Pull-up Resistance (typical 14 kΩ)		8.0	24.0	kΩ
$I_{sink0(0)}$	DAC[7:2] Sink current (0)	V_{out} = 2.0 V DC	0.1	0.3	mA
$I_{sink0(F)}$	DAC[7:2] Sink current (F)	V_{out} = 2.0 V DC	0.5	1.5	mA
$I_{sink1(0)}$	DAC[1:0] Sink current (0)	V_{out} = 2.0 V DC	1.6	4.8	mA
$I_{sink1(F)}$	DAC[1:0] Sink current (F)	V_{out} = 2.0 V DC	8	24	mA
I_{range}	Programmed Isink Ratio: max/min	V_{out} = 2.0 V DC[6]	4	6	
T_{ratio}	Tracking Ratio DAC[1:0] to DAC[7:2]	V_{out} = 2.0 V[7]	14	22	
$I_{sinkDAC}$	DAC Sink Current	V_{out} = 2.0 V DC	1.6	4.8	mA
I_{lin}	Differential Nonlinearity	DAC Port[8]	–	0.6	LSB

Switching Characteristics

(f_{OSC} = 6.0 MHz)

Parameter	Description	Min	Max	Unit
	Clock Source			
f_{OSC}	Clock Rate	6 ±0.25%	–	MHz
t_{cyc}	Clock Period	166.25	167.08	ns
t_{CH}	Clock HIGH time	0.45 t_{CYC}	–	ns
t_{CL}	Clock LOW time	0.45 t_{CYC}	–	ns
	USB Full Speed Signaling[9]			
t_{rfs}	Transition Rise Time	4	20	ns
t_{ffs}	Transition Fall Time	4	20	ns
t_{rfmfs}	Rise / Fall Time Matching; (t_r/t_f)	90	111	%
$t_{dratefs}$	Full Speed Date Rate	12 ±0.25%	–	Mb/s
	DAC Interface			
t_{sink}	Current Sink Response Time	–	0.8	µs
	HAPI Read Cycle Timing			
t_{RD}	Read Pulse Width	15	–	ns
t_{OED}	OE LOW to Data Valid[10, 11]	–	40	ns
t_{OEZ}	OE HIGH to Data High Z[11]	–	20	ns
t_{OEDR}	OE LOW to Data_Ready Deasserted[10, 11]	0	60	ns
	HAPI Write Cycle Timing			
t_{WR}	Write Strobe Width	15	–	ns
t_{DSTB}	Data Valid to STB HIGH (Data Set-up Time)[11]	5	–	ns
t_{STBZ}	STB HIGH to Data High Z (Data Hold Time)[11]	15	–	ns
t_{STBLE}	STB LOW to Latch_Empty Deasserted[10, 11]	0	50	ns
	Timer Signals			
t_{watch}	Watchdog Timer Period	8.192	14.336	ms

Notes:

6. Irange: $I_{sinkn}(15)/ I_{sinkn}(0)$ for the same pin.
7. $T_{ratio} = I_{sink1}[1:0](n)/I_{sink0}[7:2](n)$ for the same n, programmed.
8. I_{lin} measured as largest step size vs. nominal according to measured full scale and zero programmed values.
9. Per Table 7-6 of revision 1.1 of USB specification.
10. For 25-pF load.
11. Assumes chip select $\overline{CS}$ is asserted (LOW).

[+] Feedback

Figure 10. Clock Timing

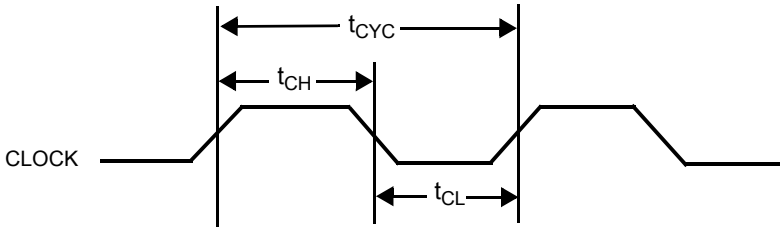

Figure 11. USB Data Signal Timing

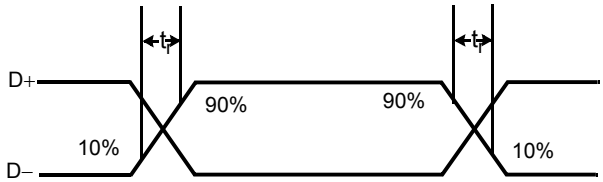

Figure 12. HAPI Read by External Interface from USB Microcontroller

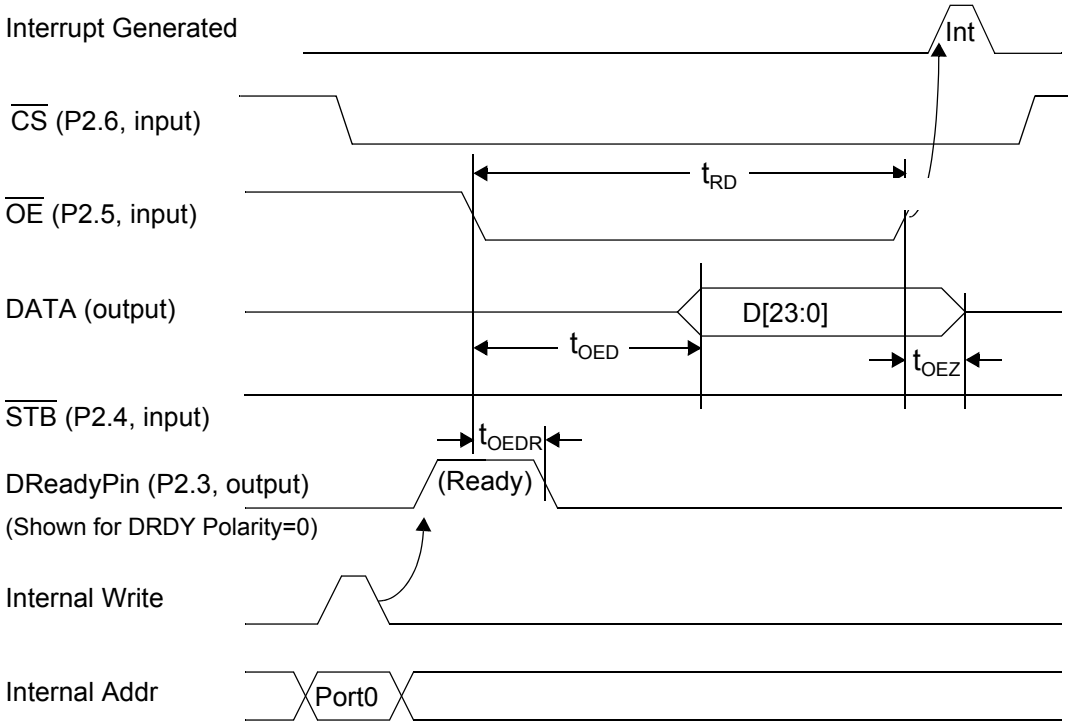

[+] Feedback

Figure 13. HAPI Write by External Device to USB Microcontroller

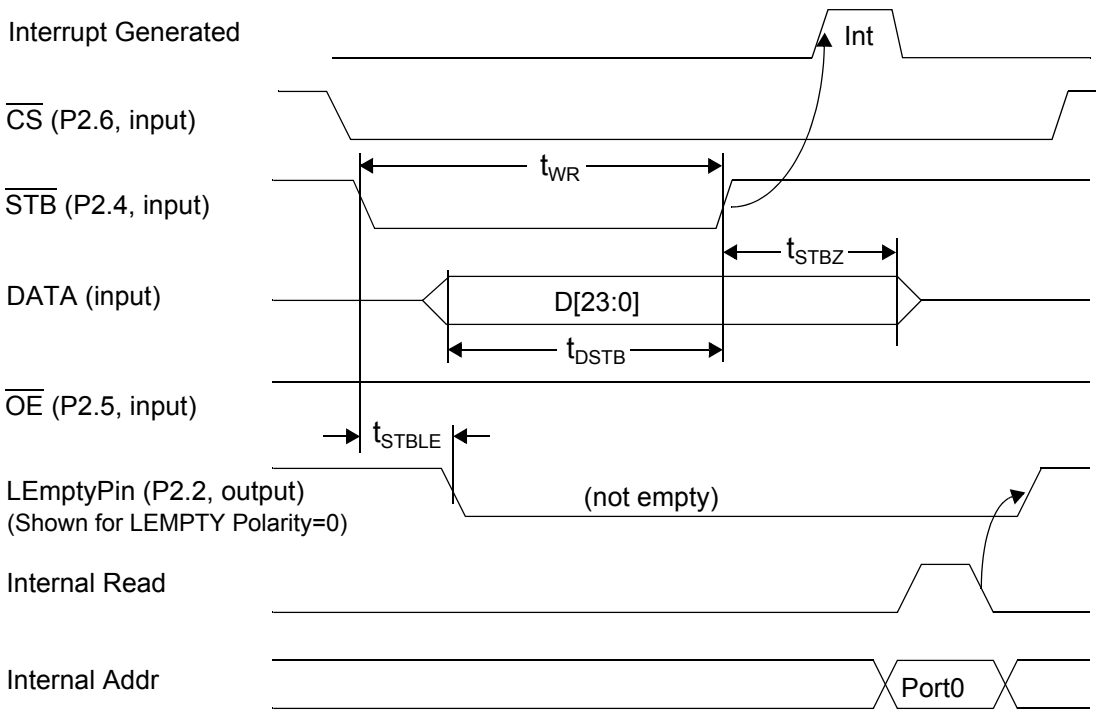

Ordering Information

Ordering Code	PROM Size	Package Type	Operating Range
CY7C64013C-SXC	8 KB	28-pin (300-Mil) SOIC (Pb-free)	Commercial
CY7C64013C-SXCT	8 KB	28-pin (300-Mil) SOIC - Tape Reel (Pb-free)	Commercial

Ordering Code Definitions

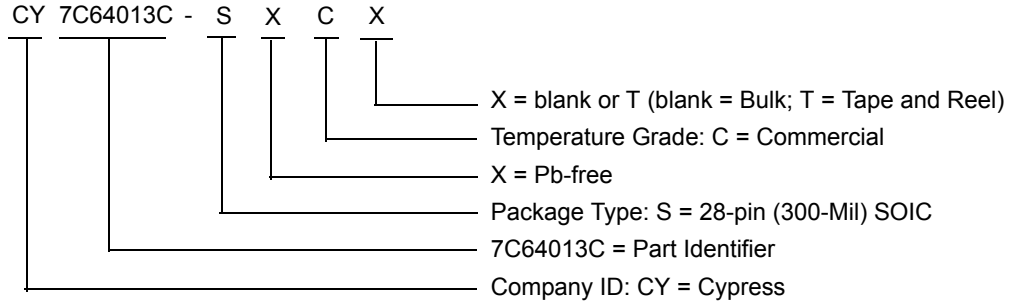

[+] Feedback

Package Diagrams

Figure 14. 48-pin SSOP

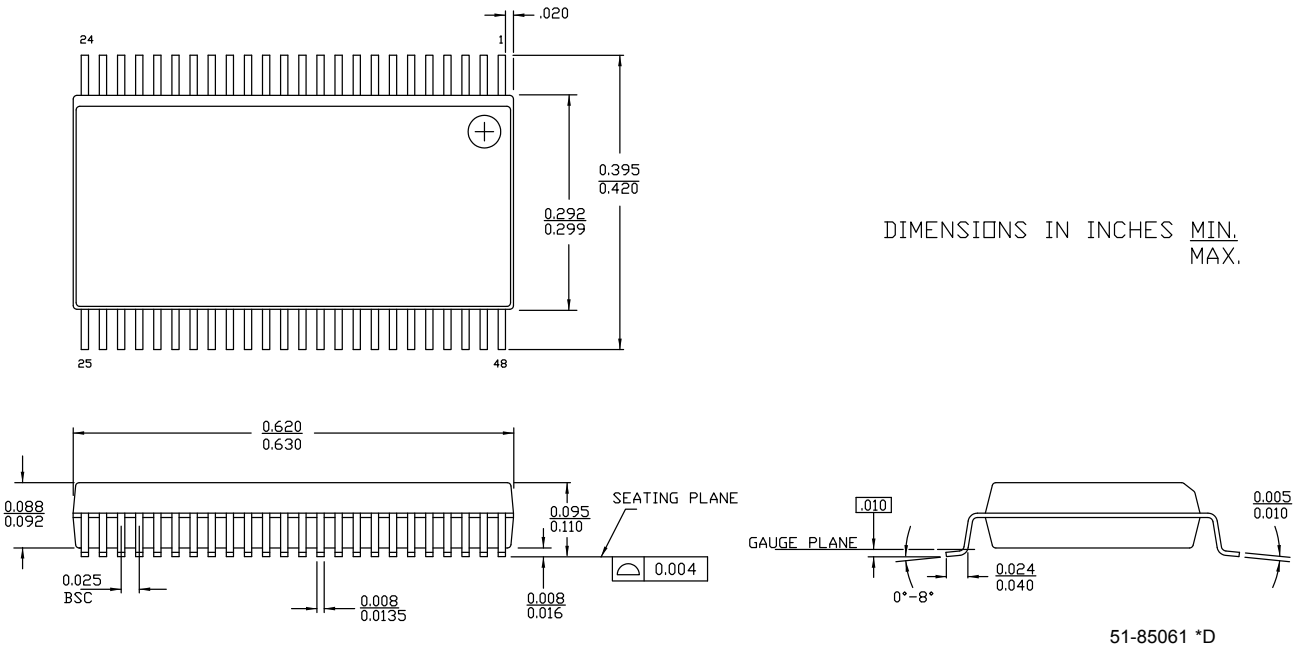

Figure 15. 28-pin (300 MIL) PDIP

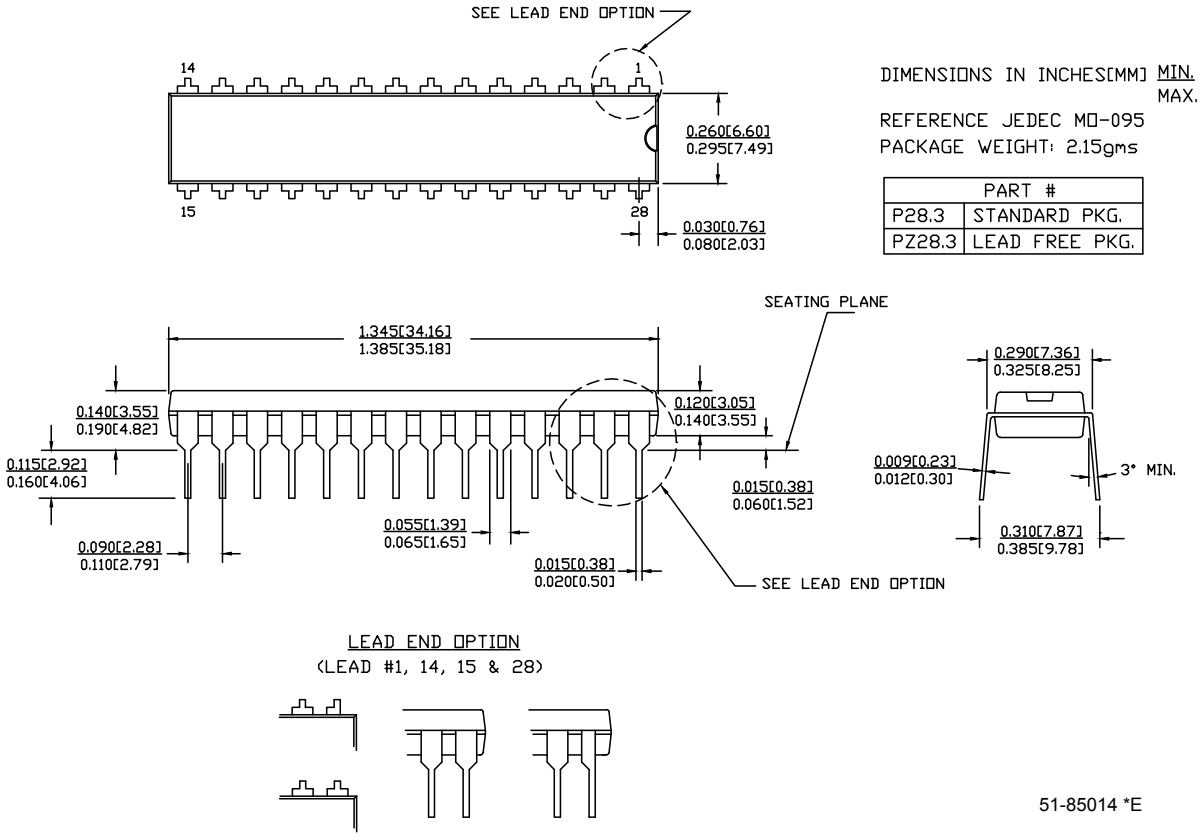

[+] Feedback

Figure 16. 28-pin SOIC (.713 × .300 × .0932 INCHES)

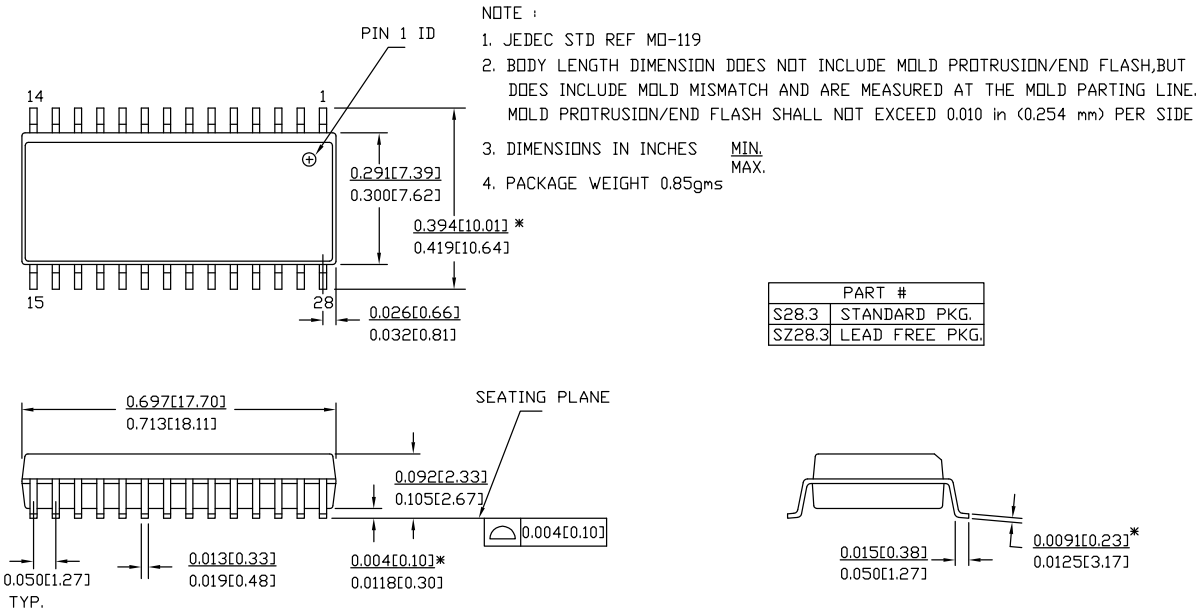

51-85026 *F

[+] Feedback

Acronyms

Acronym	Description
ADC	analog-to-digital converter
CMOS	complementary metal oxide semiconductor
CPU	central processing unit
DAC	digital-to-analog converter
EMI	electromagnetic interference
GPIO	general-purpose input/output
HAPI	Hardware Assisted Parallel Interface
LED	light-emitting diode
LSB	least significant bit
MSB	most significant bit
I/O	input/output
$\overline{OE}$	output enable
PCB	printed circuit board
PDIP	plastic dual in-line package
PLL	phase-locked loop
POR	Power-On Reset
PROM	programmable read-only memory
RAM	random access memory
SIE	serial interface engine
SOIC	small-outline integrated circuit
SSOP	shrink small-outline package
FBGA	fine-pitch ball grid array
USB	Universal Serial Bus
WDT	Watchdog Timer

Document Conventions

Units of Measure

Symbol	Unit of Measure
ns	nano seconds
ms	milli seconds
µs	micro seconds
kΩ	kilo ohms
Ω	ohms
V	Volts
µA	micro Amperes
mA	milli Amperes
cm	centi meter
mm	milli meter
kHz	kilo Hertz
MHz	Mega Hertz
pF	pico Farad
°C	degree Celcius
%	percent
mW	milli Watts
W	Watts

[+] Feedback

Document History Page

Document Title: CY7C64013C, CY7C64113C Full-Speed USB (12-Mbps) Function Document Number: 38-08001				
REV.	**ECN NO.**	**Issue Date**	**Orig. of Change**	**Description of Change**
**	109962	12/16/01	SZV	Change from Spec number: 38-00626 to 38-08001
*A	129715	02/05/04	MON	Added register bit definitions Added default bit state of each register Corrected the Schematic (location of the Pull up on D+) Added register summary Modified tables 19-1 and 19-2 Provided more explanation regarding locking/unlocking mechanism of the mode register.
*B	429099	See ECN	TYJ	Changed part numbers to the 'C' types. Included 'Cypress Perform' logo. Updated part numbers in the Ordering section.
*C	2897159	03/22/10	XUT	Removed inactive parts CY7C64013C-PXC and CY7C64113C-PVXC from the Ordering information table. Updated package diagrams.
*D	3190495	03/08/2011	NXZ	Added Ordering Code Definitions. Updated Package Diagrams. Added Acronyms and Units of Measure. Updated in new template.

[+] Feedback

Sales, Solutions, and Legal Information

Worldwide Sales and Design Support

Cypress maintains a worldwide network of offices, solution centers, manufacturer's representatives, and distributors. To find the office closest to you, visit us at Cypress Locations.

Products

Automotive	cypress.com/go/automotive
Clocks & Buffers	cypress.com/go/clocks
Interface	cypress.com/go/interface
Lighting & Power Control	cypress.com/go/powerpsoc cypress.com/go/plc
Memory	cypress.com/go/memory
Optical & Image Sensing	cypress.com/go/image
PSoC	cypress.com/go/psoc
Touch Sensing	cypress.com/go/touch
USB Controllers	cypress.com/go/USB
Wireless/RF	cypress.com/go/wireless

PSoC Solutions

psoc.cypress.com/solutions

PSoC 1 | PSoC 3 | PSoC 5

© Cypress Semiconductor Corporation, 2001-2011. The information contained herein is subject to change without notice. Cypress Semiconductor Corporation assumes no responsibility for the use of any circuitry other than circuitry embodied in a Cypress product. Nor does it convey or imply any license under patent or other rights. Cypress products are not warranted nor intended to be used for medical, life support, life saving, critical control or safety applications, unless pursuant to an express written agreement with Cypress. Furthermore, Cypress does not authorize its products for use as critical components in life-support systems where a malfunction or failure may reasonably be expected to result in significant injury to the user. The inclusion of Cypress products in life-support systems application implies that the manufacturer assumes all risk of such use and in doing so indemnifies Cypress against all charges.

Any Source Code (software and/or firmware) is owned by Cypress Semiconductor Corporation (Cypress) and is protected by and subject to worldwide patent protection (United States and foreign), United States copyright laws and international treaty provisions. Cypress hereby grants to licensee a personal, non-exclusive, non-transferable license to copy, use, modify, create derivative works of, and compile the Cypress Source Code and derivative works for the sole purpose of creating custom software and or firmware in support of licensee product to be used only in conjunction with a Cypress integrated circuit as specified in the applicable agreement. Any reproduction, modification, translation, compilation, or representation of this Source Code except as specified above is prohibited without the express written permission of Cypress.

Disclaimer: CYPRESS MAKES NO WARRANTY OF ANY KIND, EXPRESS OR IMPLIED, WITH REGARD TO THIS MATERIAL, INCLUDING, BUT NOT LIMITED TO, THE IMPLIED WARRANTIES OF MERCHANTABILITY AND FITNESS FOR A PARTICULAR PURPOSE. Cypress reserves the right to make changes without further notice to the materials described herein. Cypress does not assume any liability arising out of the application or use of any product or circuit described herein. Cypress does not authorize its products for use as critical components in life-support systems where a malfunction or failure may reasonably be expected to result in significant injury to the user. The inclusion of Cypress' product in a life-support systems application implies that the manufacturer assumes all risk of such use and in doing so indemnifies Cypress against all charges.

Use may be limited by and subject to the applicable Cypress software license agreement.

All products and company names mentioned in this document may be the trademarks of their respective holders.

[+] Feedback

OCEAN CHIPS
Океан Электроники
Поставка электронных компонентов

Компания «Океан Электроники» предлагает заключение долгосрочных отношений при поставках импортных электронных компонентов на взаимовыгодных условиях!

Наши преимущества:

- Поставка оригинальных импортных электронных компонентов напрямую с производств Америки, Европы и Азии, а так же с крупнейших складов мира;
- Широкая линейка поставок активных и пассивных импортных электронных компонентов (более 30 млн. наименований);
- Поставка сложных, дефицитных, либо снятых с производства позиций;
- Оперативные сроки поставки под заказ (от 5 рабочих дней);
- Экспресс доставка в любую точку России;
- Помощь Конструкторского Отдела и консультации квалифицированных инженеров;
- Техническая поддержка проекта, помощь в подборе аналогов, поставка прототипов;
- Поставка электронных компонентов под контролем ВП;
- Система менеджмента качества сертифицирована по Международному стандарту ISO 9001;
- При необходимости вся продукция военного и аэрокосмического назначения проходит испытания и сертификацию в лаборатории (по согласованию с заказчиком);
- Поставка специализированных компонентов военного и аэрокосмического уровня качества (Xilinx, Altera, Analog Devices, Intersil, Interpoint, Microsemi, Actel, Aeroflex, Peregrine, VPT, Syfer, Eurofarad, Texas Instruments, MS Kennedy, Miteq, Cobham, E2V, MA-COM, Hittite, Mini-Circuits, General Dynamics и др.);

Компания «Океан Электроники» является официальным дистрибьютором и эксклюзивным представителем в России одного из крупнейших производителей разъемов военного и аэрокосмического назначения **«JONHON»**, а так же официальным дистрибьютором и эксклюзивным представителем в России производителя высокотехнологичных и надежных решений для передачи СВЧ сигналов **«FORSTAR»**.

AVIC JONHON

«JONHON» (основан в 1970 г.)

Разъемы специального, военного и аэрокосмического назначения:

(Применяются в военной, авиационной, аэрокосмической, морской, железнодорожной, горно- и нефтедобывающей отраслях промышленности)

«FORSTAR» (основан в 1998 г.)

ВЧ соединители, коаксиальные кабели, кабельные сборки и микроволновые компоненты:

(Применяются в телекоммуникациях гражданского и специального назначения, в средствах связи, РЛС, а так же военной, авиационной и аэрокосмической отраслях промышленности).

FORSTAR®

Телефон: 8 (812) 309-75-97 (многоканальный)
Факс: 8 (812) 320-03-32
Электронная почта: ocean@oceanchips.ru
Web: http://oceanchips.ru/
Адрес: 198099, г. Санкт-Петербург, ул. Калинина, д. 2, корп. 4, лит. А