## FEATURES

- **100 mbar to 10 bar, 1 to 150 psi gage or differential pressure**
- **Increased media compatibility[1]**
- **Analog output**
- **Precision ASIC signal conditioning**
- **Calibrated and temperature compensated[2]**
- **SIL and DIP housings**
- **RoHS compliant**
- **Quality Management System according to ISO 13485:2003 and ISO 9001:2008**

## MEDIA COMPATIBILITY[1,2]

High pressure port: To be used with gases and liquids which are compatible with the wetted materials (high temperature polyamide, ceramic $AL_2O_3$, epoxy, fluorosilicone, glass, silicon).

Low pressure port: To be used with non-corrosive, non-ionic working fluids such as clean dry air, dry gases and the like.

## SPECIFICATIONS

**Maximum ratings**

| | |
|---|---|
| Supply voltage $V_S$ | |
| HMA...3 | 2.7 ... 4.2 $V_{DC}$ |
| HMA...5 | 4.2 ... 5.5 $V_{DC}$ |
| | max. 6.5 $V_{DC}$ |
| Output current | |
| Sink | 1 mA |
| Source | 1 mA |

**Environmental**

| | |
|---|---|
| Temperature ranges | |
| Compensated | -20 ... +85 °C |
| Operating | -20 ... +85 °C |
| Storage[3] | -40 ... +125 °C |
| Humidity limits (non-condensing) | ...95 %RH[10] |
| (100 % condensing or direct liquid media on high pressure port[1]) | |
| Vibration | max. 10 g, 10...2000 Hz, random (EN 60068-2-64) |
| Mechanical shock | max. 50 g, 11 ms (EN 60068-2-27) |
| Lead solder temperature | max. 270 °C (JESD22-B106D) |

## ELECTRICAL CONNECTION

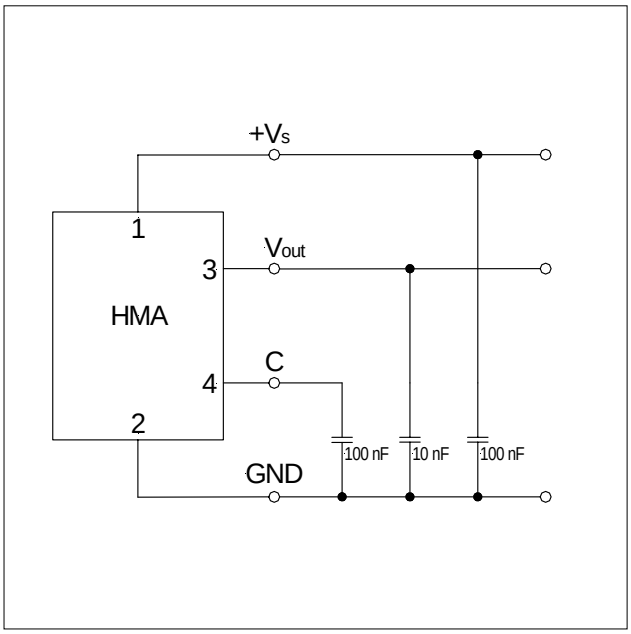





First Sensor
SENSORTECHNICS

www.first-sensor.com
www.sensortechnics.com

## PRESSURE SENSOR CHARACTERISTICS

($T_A$=25 °C, RH=50 %)

| Part no. | Operating pressure | Proof pressure[4] |
|---|---|---|
| HMAM100U... | 0...100 mbar | 2 bar |
| HMAM100B... | 0...±100 mbar | 2 bar |
| HMAM250U... | 0...250 mbar | 2 bar |
| HMAM250B... | 0...±250 mbar | 2 bar |
| HMAB001U... | 0...1 bar | 5 bar |
| HMAB001B... | 0...±1 bar | 5 bar |
| HMAB2x5U... | 0...2.5 bar | 10 bar |
| HMAB005U... | 0...5 bar | 14 bar |
| HMAB010U... | 0...10 bar | 14 bar |
| HMAP001U... | 0...1 psi | 30 psi |
| HMAP001B... | 0...±1 psi | 30 psi |
| HMAP100U... | 0...100 psi | 200 psi |

**Other pressure ranges (e.g. 500 mbar, 5 psi, 150 psi) are available on request. Please contact First Sensor.**

## PERFORMANCE CHARACTERISTICS[2]

($V_S$=5.0 $V_{DC}$, $T_A$=25 °C, RH=50 %, analog output signal is ratiometric to $V_S$ in the range of $V_S$ =4.2...5.5 V)

**All HMA...H5 devices ($V_S$ = 5.0)**

| Characteristics | Min. | Typ. | Max. | Units |
|---|---|---|---|---|
| Non-linearity (-20...85 °C)[6] | | | ±0.25 | %FSS |
| Accuracy[7] | | | ±0.25 | |
| Total accuracy (-20...85 °C)[8] | | | ±1.5 | |
| Response delay[9] | | 0.5 | | ms |
| A/D resolution | | 12 | | bit |
| D/A resolution | | | 11 | |
| Current consumption | | 5.3 | | mA |

**All HMA...U...H5 (unidirectional devices)**

| Characteristics | Min. | Typ. | Max. | Units |
|---|---|---|---|---|
| Zero pressure offset | 0.44 | 0.50 | 0.56 | V |
| Full scale span (FSS)[5] | | 4.00 | | |
| Full scale output | 4.44 | 4.50 | 4.56 | |

**All HMA...B...H5 (bidirectional devices)**

| Characteristics | | Min. | Typ. | Max. | Units |
|---|---|---|---|---|---|
| Zero pressure offset | | 2.44 | 2.50 | 2.56 | V |
| Full scale span (FSS)[5] | | | 4.00 | | |
| Output | at max. specified pressure | 4.44 | 4.50 | 4.56 | |
| | at min. specified pressure | 0.44 | 0.50 | 0.56 | |

## PERFORMANCE CHARACTERISTICS[2]

($V_S$=3.0 $V_{DC}$, $T_A$=25 °C, RH=50 %, analog output signal is ratiometric to $V_S$ in the range of $V_S$=2.7...4.2 V)

**All HMA...H3 devices ($V_S$ = 3.0)**

| Characteristics | Min. | Typ. | Max. | Units |
|---|---|---|---|---|
| Non-linearity (-20...85 °C)[6] | | | ±0.25 | %FSS |
| Accuracy[7] | | | ±0.25 | |
| Total accuracy (-20...85 °C)[8] | | | ±1.5 | |
| Response delay[9] | | 0.5 | | ms |
| A/D resolution | | 12 | | bit |
| D/A resolution | | | 11 | |
| Current consumption | | 4.5 | | mA |

**All HMA...U...H3 (unidirectional devices)**

| Characteristics | Min. | Typ. | Max. | Units |
|---|---|---|---|---|
| Zero pressure offset | 0.264 | 0.30 | 0.336 | V |
| Full scale span (FSS)[5] | | 2.40 | | |
| Full scale output | 2.664 | 2.70 | 2.736 | |

**All HMA...B...H3 (bidirectional devices)**

| Characteristics | | Min. | Typ. | Max. | Units |
|---|---|---|---|---|---|
| Zero pressure offset | | 1.464 | 1.50 | 1.536 | V |
| Full scale span (FSS)[5] | | | 2.40 | | |
| Output | at max. specified pressure | 2.664 | 2.70 | 2.736 | |
| | at min. specified pressure | 0.264 | 0.30 | 0.336 | |

**Specification notes:**

1. All wetted materials are selected to give a high level of media compatibility. Media compatibility refers to media inside the pressure port and lid. Improved media compatibility on high pressure port (backward side of sensor chip) since media has no contact to electronic components. Nevertheless tests with the media used in the specific application are recommended.
2. Sensor is calibrated in air, changes in sensor behaviour based on physical effects caused by the specific media can occur. Weight of the media and wetting forces can influence the sensor characteristics.
3. Storage temperature of the sensor without package.
4. Proof pressure is the maximum pressure which may be applied without causing durable shifts of the electrical parameters of the sensing element.
5. Full Scale Span (FSS) is the algebraic difference between the output signal for the highest and lowest specified pressure.
6. Non-linearity is the measured deviation based on Best Fit Straight Line (BFSL).
7. Accuracy is the combined error from non-linearity and hysteresis. Hysteresis is the maximum output difference at any point within the operating pressure range for increasing and decreasing pressure.
8. Total accuracy is the combined error from offset and span calibration, non-linearity, pressure hysteresis, and temperature effects. Calibration errors include the deviation of offset and full scale from nominal values.
9. Max. delay time between pressure change at the pressure die and signal change at the output.
10. Tested 1h, up to 85 °C.

**Sensors are electronic components and should be handled only in ESD save environments.**

## PHYSICAL DIMENSIONS AND ELECTRICAL CONNECTION

### HMA...U1... (SIL, axial no ports)

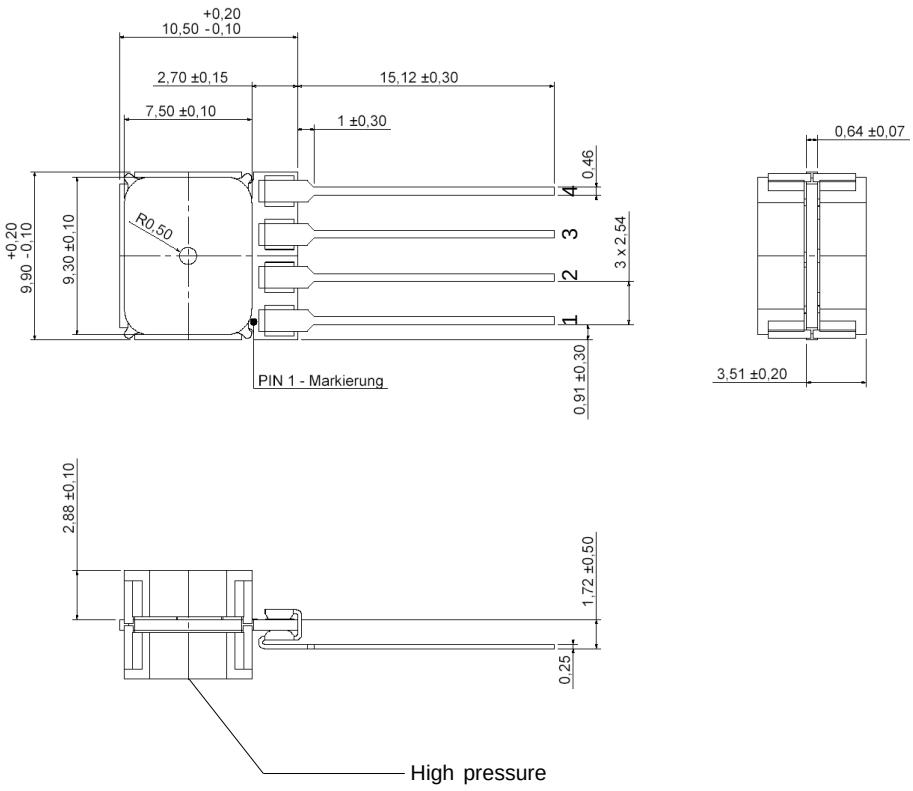


| Pin | Connection |
|---|---|
| 1 | +Vs |
| 2 | GND |
| 3 | +Vout |
| 4 | C |

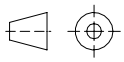

first angle projection

dimensions in mm

## PHYSICAL DIMENSIONS AND ELECTRICAL CONNECTION (cont.)

### HMA...W1... (DIP, axial no ports)

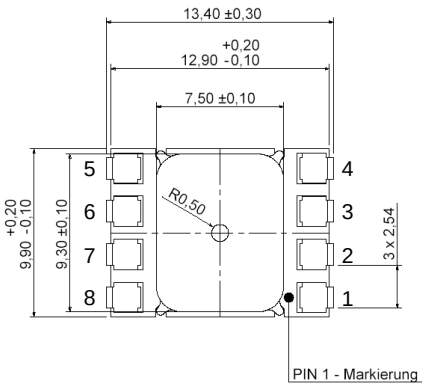


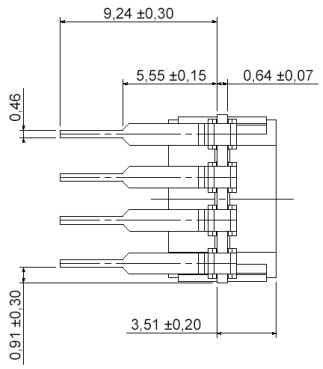


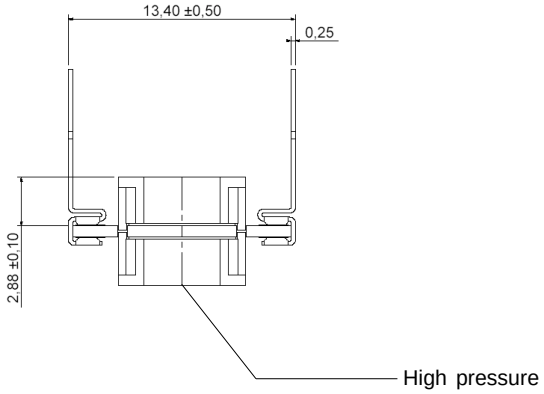


| Pin | Connection |
|---|---|
| 1 | +Vs |
| 2 | GND |
| 3 | +Vout |
| 4 | C |
| 5 | I / C* |
| 6 | I / C* |
| 7 | I / C* |
| 8 | I / C* |

* Internal connection. Do not connect for any reason

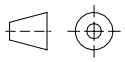

first angle projection

dimensions in mm

## PHYSICAL DIMENSIONS AND ELECTRICAL CONNECTION (cont.)

### HMA...U7... (SIL, 2 ports axial opposite side, barbed)

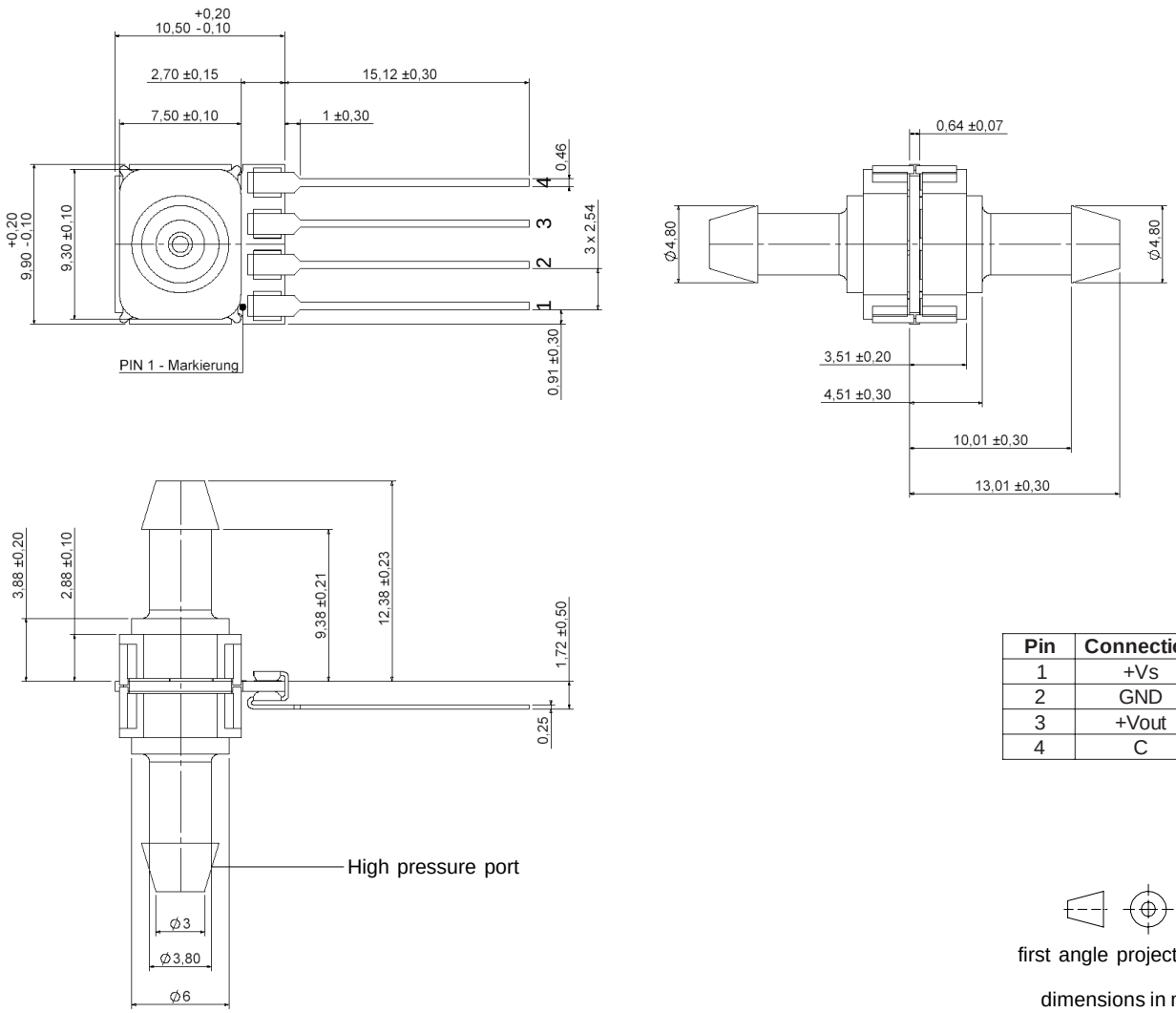


| Pin | Connection |
|---|---|
| 1 | +Vs |
| 2 | GND |
| 3 | +Vout |
| 4 | C |

first angle projection

dimensions in mm

## PHYSICAL DIMENSIONS AND ELECTRICAL CONNECTION (cont.)

### HMA...X7... (SIL, 1 port axial, barbed)

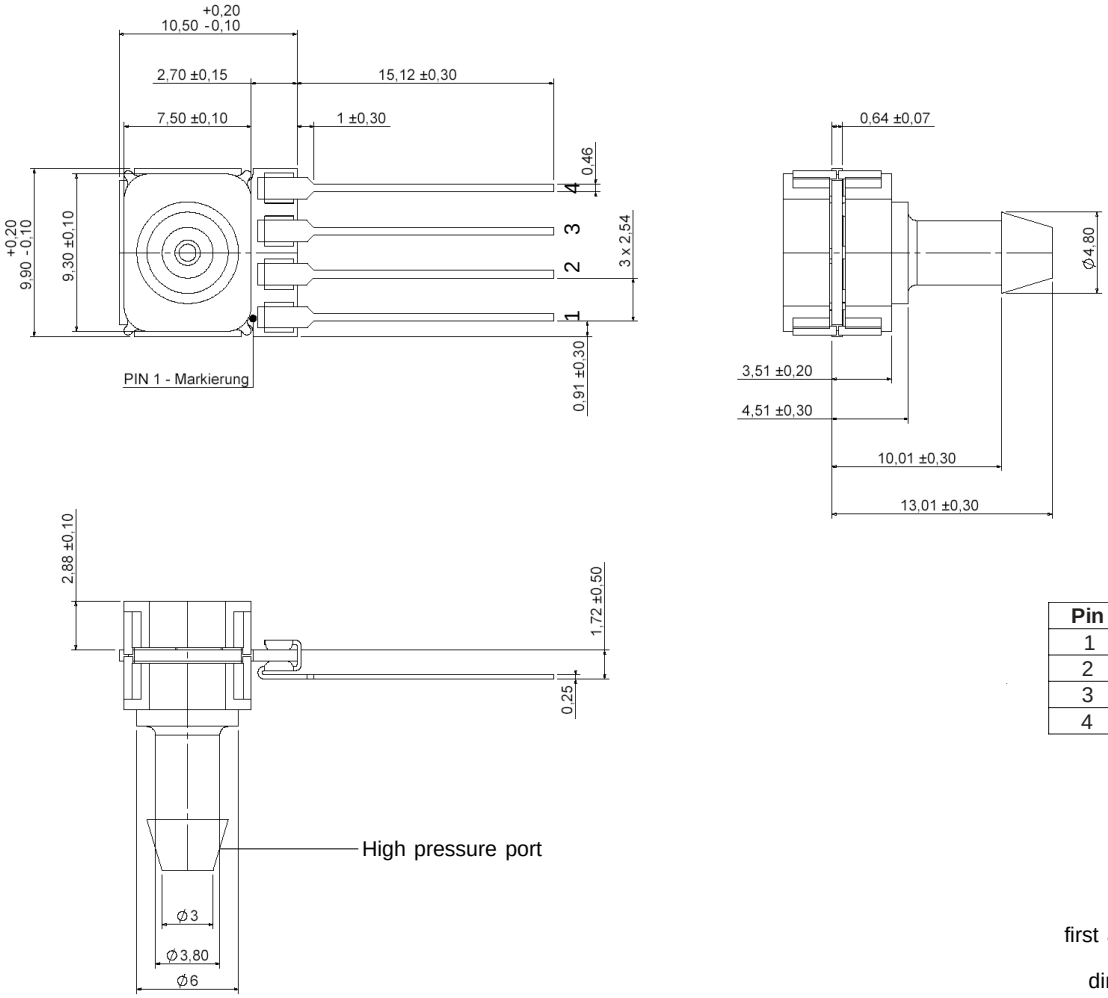


| Pin | Connection |
|---|---|
| 1 | +Vs |
| 2 | GND |
| 3 | +Vout |
| 4 | C |

first angle projection

dimensions in mm

## PHYSICAL DIMENSIONS AND ELECTRICAL CONNECTION (cont.)

### HMA...Z7... (DIP, 1 port axial, barbed)

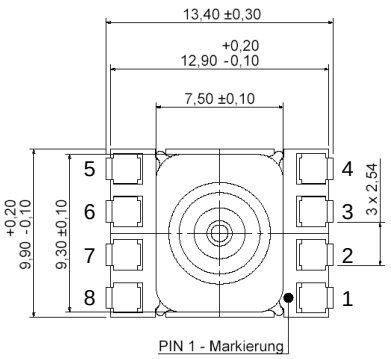


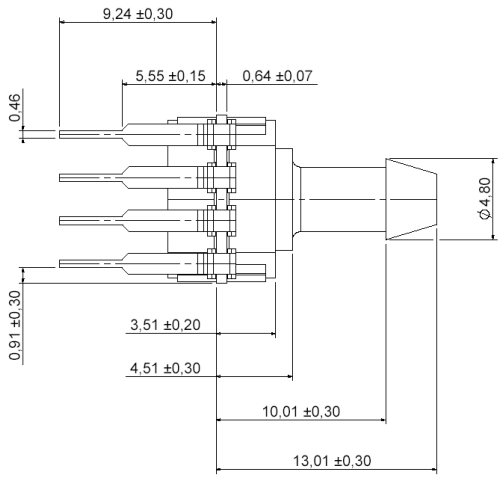


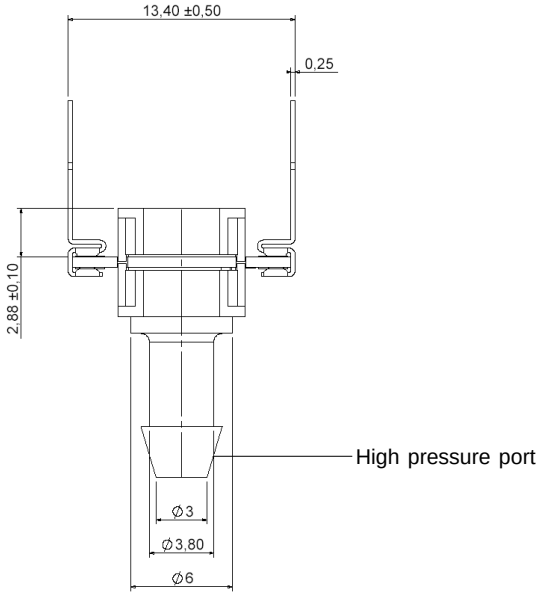


| Pin | Connection |
|---|---|
| 1 | +Vs |
| 2 | GND |
| 3 | +Vout |
| 4 | C |
| 5 | I / C* |
| 6 | I / C* |
| 7 | I / C* |
| 8 | I / C* |

* Internal connection. Do not connect for any reason

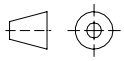

first angle projection

dimensions in mm

## PHYSICAL DIMENSIONS AND ELECTRICAL CONNECTION (cont.)

### HMA...U6... (SIL, 2 ports axial opposite side, straight big)

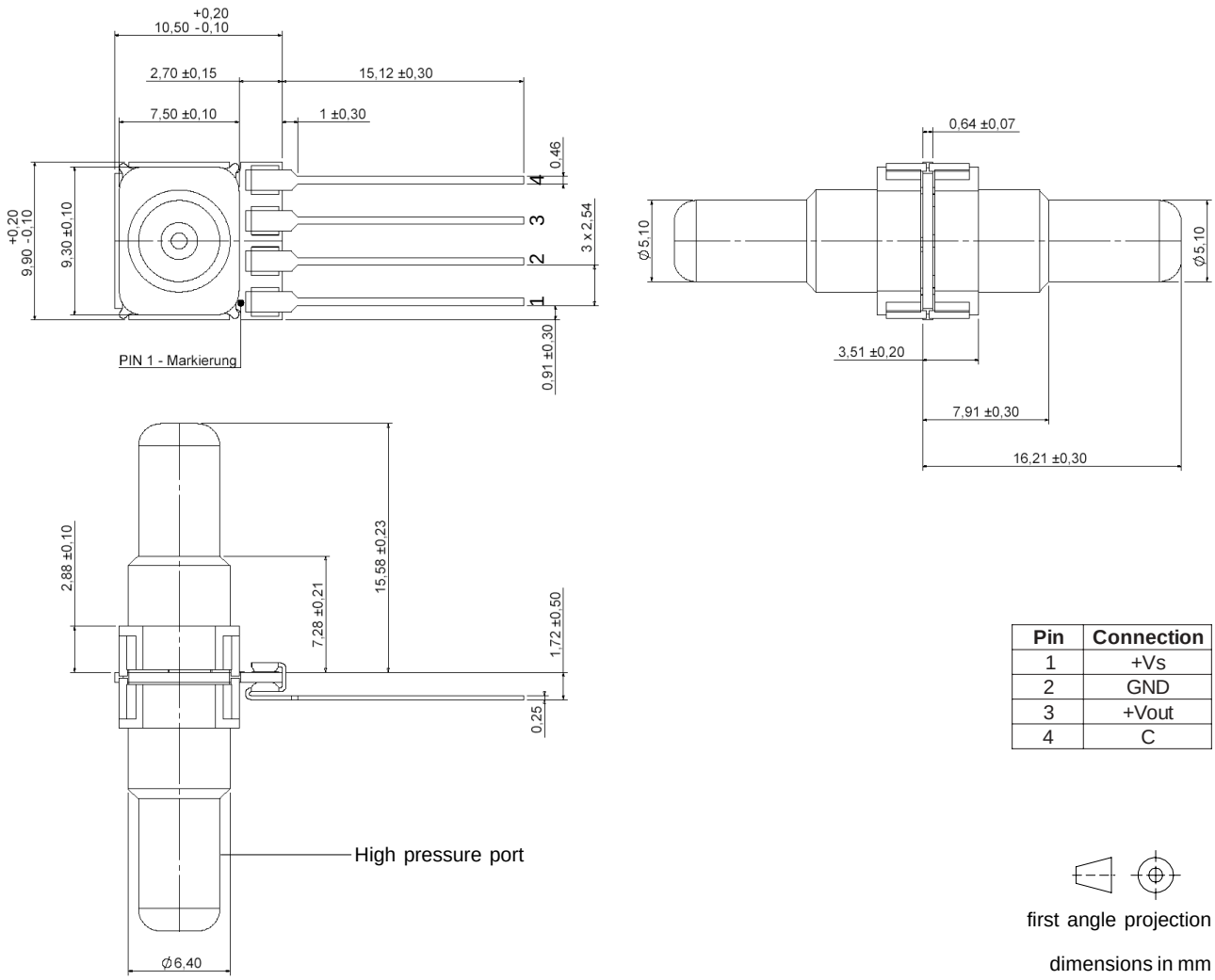


| Pin | Connection |
|---|---|
| 1 | +Vs |
| 2 | GND |
| 3 | +Vout |
| 4 | C |

first angle projection

dimensions in mm

## PHYSICAL DIMENSIONS AND ELECTRICAL CONNECTION (cont.)

### HMA...X6... (SIL, 1 port axial, straight big)

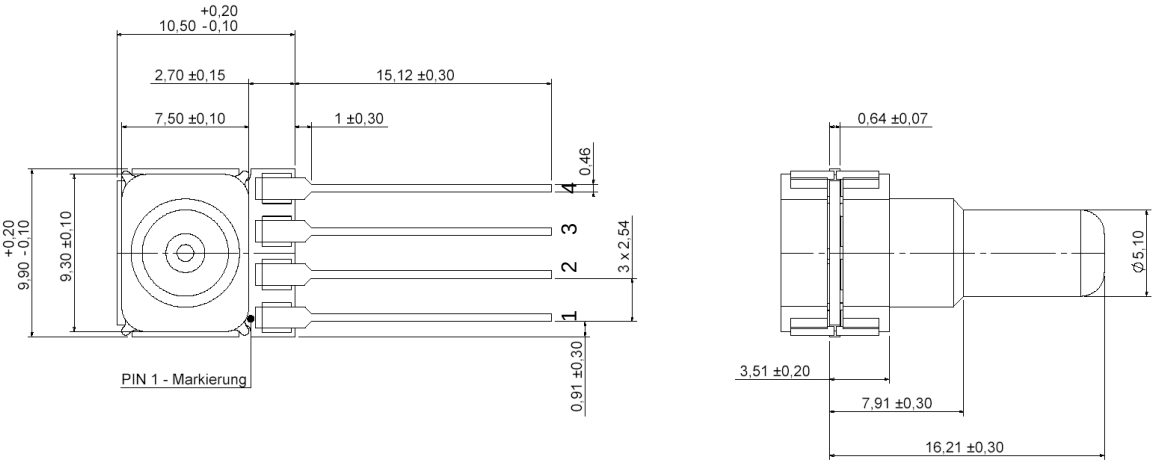


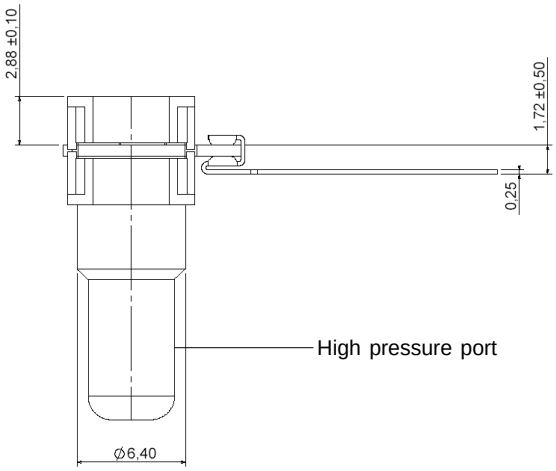


| Pin | Connection |
|---|---|
| 1 | +Vs |
| 2 | GND |
| 3 | +Vout |
| 4 | C |

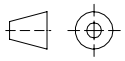

first angle projection

dimensions in mm

## PHYSICAL DIMENSIONS AND ELECTRICAL CONNECTION (cont.)

### HMA...Z6... (DIP, 1 port axial, straight big)

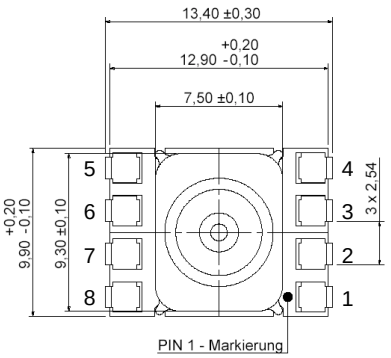


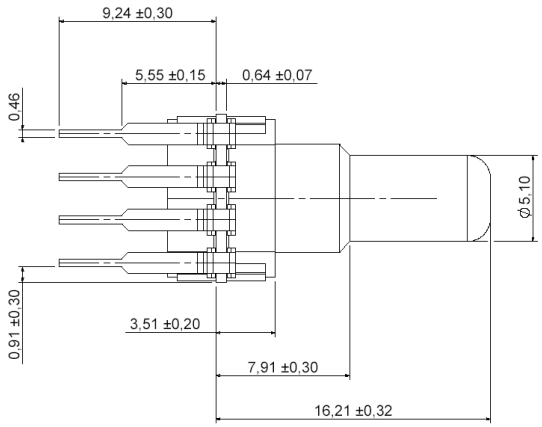


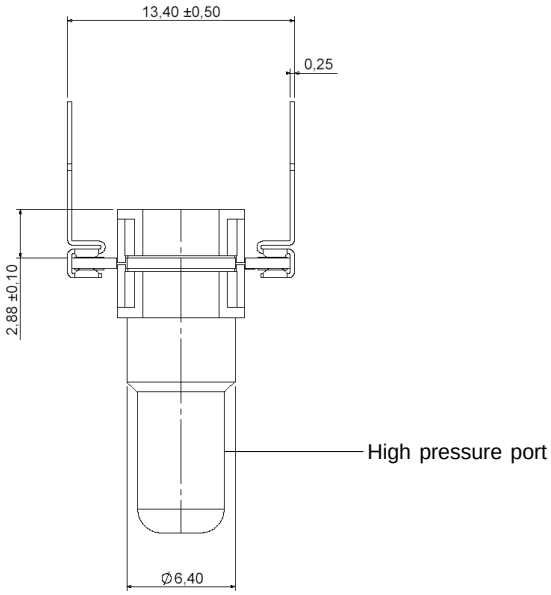


| Pin | Connection |
|---|---|
| 1 | +Vs |
| 2 | GND |
| 3 | +Vout |
| 4 | C |
| 5 | I / C* |
| 6 | I / C* |
| 7 | I / C* |
| 8 | I / C* |

* Internal connection. Do not connect for any reason

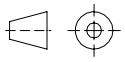

first angle projection

dimensions in mm

## PHYSICAL DIMENSIONS AND ELECTRICAL CONNECTION (cont.)

### HMA...U5... (SIL, 2 ports axial opposite side, needle big)

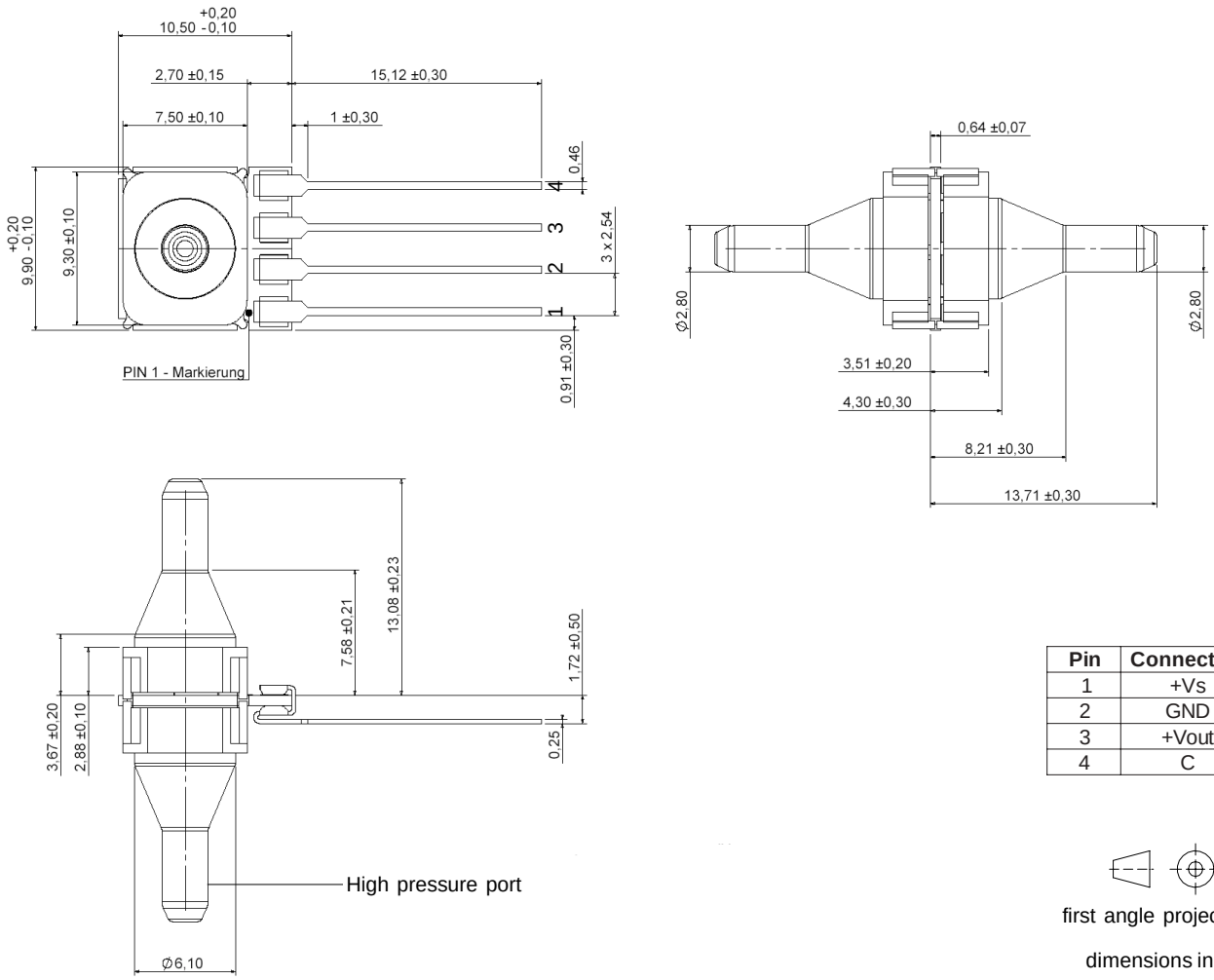


| Pin | Connection |
|---|---|
| 1 | +Vs |
| 2 | GND |
| 3 | +Vout |
| 4 | C |

first angle projection

dimensions in mm

## PHYSICAL DIMENSIONS AND ELECTRICAL CONNECTION (cont.)

### HMA...X5... (SIL, 1 port axial, needle big)

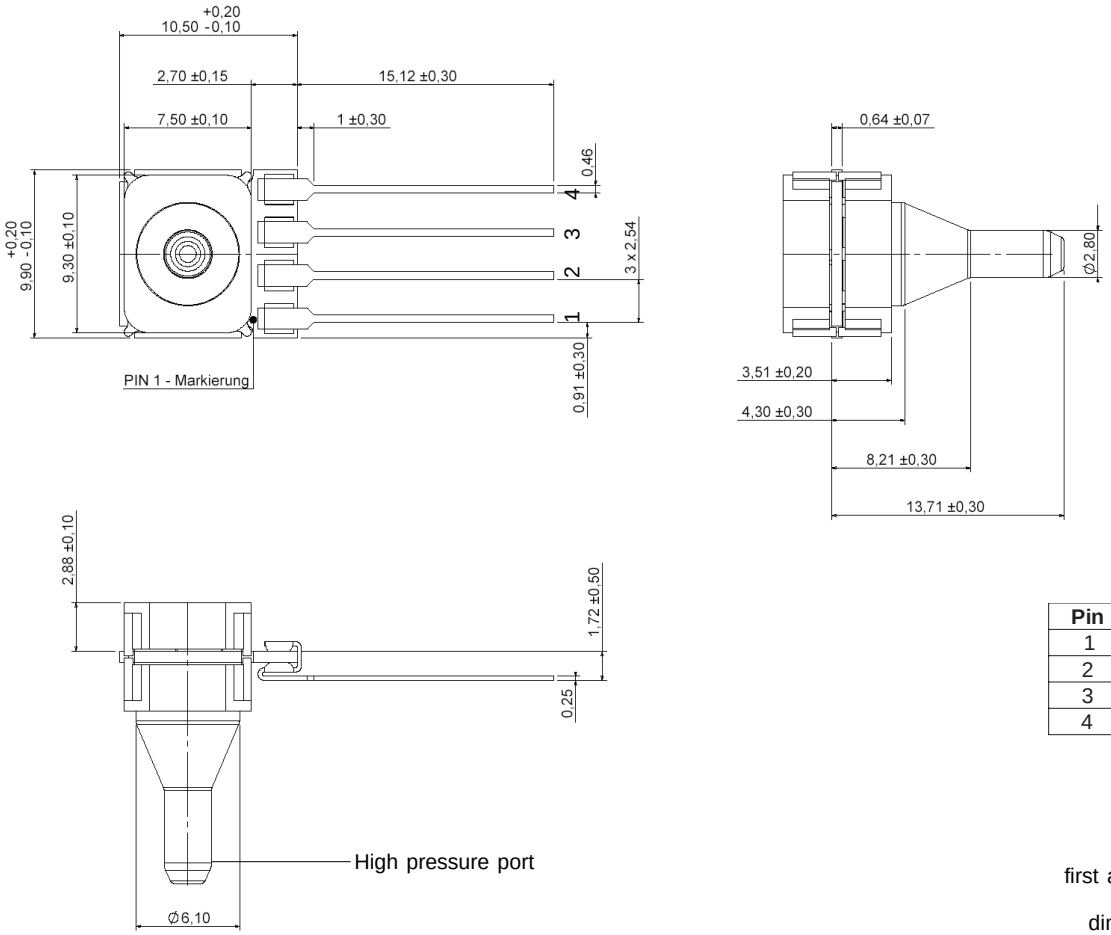


| Pin | Connection |
|---|---|
| 1 | +Vs |
| 2 | GND |
| 3 | +Vout |
| 4 | C |

first angle projection

dimensions in mm

## PHYSICAL DIMENSIONS AND ELECTRICAL CONNECTION (cont.)

### HMA...Z5... (DIP, 1 port axial, needle big)

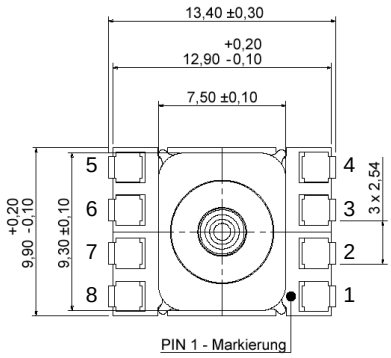


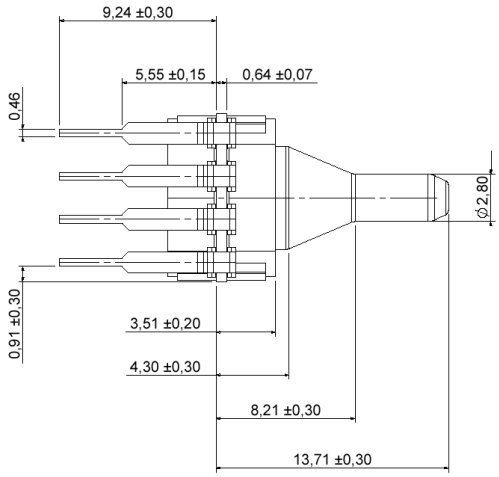


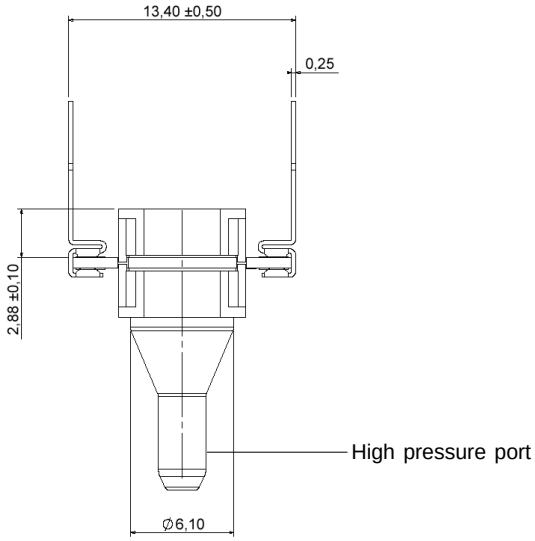


| Pin | Connection |
|---|---|
| 1 | +Vs |
| 2 | GND |
| 3 | +Vout |
| 4 | C |
| 5 | I / C* |
| 6 | I / C* |
| 7 | I / C* |
| 8 | I / C* |

* Internal connection. Do not connect for any reason

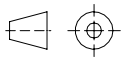

dimensions in mm

## NOMENCLATURE

| | Series | Pressure range | | Calibration | | Housing | | Porting | | Grade | | Voltage | |
|---|---|---|---|---|---|---|---|---|---|---|---|---|---|
| Options | HMA | M100 | 100 mbar | B | Bidirectional | U | SIL, 2 ports axial opposite side | (1) | no port | H | High | (3) | 3 V |
| | | M250 | 250 mbar | U | Unidirectional | | | 7 | Barbed | | | 5 | 5 V |
| | | B001 | 1 bar | | | (W) | DIP, 2 ports axial opposite side | (5) | Needle big | | | | |
| | | B2x5 | 2.5 bar | | | | | (6) | Straight big | | | | |
| | | B005 | 5 bar | | | X | SIL, 1 port axial | | | | | | |
| | | B010 | 10 bar | | | Z | DIP, 1 port axial | | | | | | |
| | | P001 | 1 psi | | | | | | | | | | |
| | | P100 | 100 psi | | | | | | | | | | |
| | | | | | | ( ) available on request. Please contact First Sensor. | | | | | | | |
| Example: | HMA | M100 | | U | | U | | 7 | | H | | 5 | |

## LABEL INFORMATION

| Digit | 1 2 3 | 4 | | 5 | | 6 | | 7 | | 8 | | 9 10 11 12 13 14 |
|---|---|---|---|---|---|---|---|---|---|---|---|---|
| | Series | Pressure range | | Pressure unit / pressure mode / calibration | | Housing | | Porting | | Grade/ voltage | | Production code |
| Char | M A - HMA | 6 | 1 psi | U | bar, gage/differential, unidirectional | U | SIL, 2 ports axial opposite side | 1 | no port | - | High, 5 V | |
| | | 7 | 100 mbar | | | | | 7 | Barbed | / | High, 3 V | |
| | | 8 | 250 mbar | B | bar, gage/differential, bidirectional | W | DIP, 2 ports axial opposite side | 5 | Needle big | | | |
| | | A | 1 bar | | | | | 6 | Straight big | | | |
| | | B | 2.5 bar | | | X | SIL, 1 port, axial | | | | | |
| | | C | 5 bar | | | | | | | | | |
| | | L | 100 psi | | | Z | DIP, 1 port axial | | | | | |
| | | M | 10 bar | | | | | | | | | |


First Sensor reserves the right to make changes to any products herein. First Sensor does not assume any liability arising out of the application or use of any product or circuit described herein, neither does it convey any license under its patent rights nor the rights of others.

LGA InterCert Certified Quality System EN ISO 13485:2003+AC:2009 DIN EN ISO 9001:2008

# OCEAN CHIPS
## Океан Электроники
### Поставка электронных компонентов

Компания «Океан Электроники» предлагает заключение долгосрочных отношений при поставках импортных электронных компонентов на взаимовыгодных условиях!

Наши преимущества:

- Поставка оригинальных импортных электронных компонентов напрямую с производств Америки, Европы и Азии, а так же с крупнейших складов мира;
- Широкая линейка поставок активных и пассивных импортных электронных компонентов (более 30 млн. наименований);
- Поставка сложных, дефицитных, либо снятых с производства позиций;
- Оперативные сроки поставки под заказ (от 5 рабочих дней);
- Экспресс доставка в любую точку России;
- Помощь Конструкторского Отдела и консультации квалифицированных инженеров;
- Техническая поддержка проекта, помощь в подборе аналогов, поставка прототипов;
- Поставка электронных компонентов под контролем ВП;
- Система менеджмента качества сертифицирована по Международному стандарту ISO 9001;
- При необходимости вся продукция военного и аэрокосмического назначения проходит испытания и сертификацию в лаборатории (по согласованию с заказчиком);
- Поставка специализированных компонентов военного и аэрокосмического уровня качества (Xilinx, Altera, Analog Devices, Intersil, Interpoint, Microsemi, Actel, Aeroflex, Peregrine, VPT, Syfer, Eurofarad, Texas Instruments, MS Kennedy, Miteq, Cobham, E2V, MA-COM, Hittite, Mini-Circuits, General Dynamics и др.);

Компания «Океан Электроники» является официальным дистрибьютором и эксклюзивным представителем в России одного из крупнейших производителей разъемов военного и аэрокосмического назначения **«JONHON»**, а так же официальным дистрибьютором и эксклюзивным представителем в России производителя высокотехнологичных и надежных решений для передачи СВЧ сигналов **«FORSTAR»**.

AVIC JONHON

**«JONHON»** (основан в 1970 г.)

Разъемы специального, военного и аэрокосмического назначения:

(Применяются в военной, авиационной, аэрокосмической, морской, железнодорожной, горно- и нефтедобывающей отраслях промышленности)

**«FORSTAR»** (основан в 1998 г.)

ВЧ соединители, коаксиальные кабели, кабельные сборки и микроволновые компоненты:

(Применяются в телекоммуникациях гражданского и специального назначения, в средствах связи, РЛС, а так же военной, авиационной и аэрокосмической отраслях промышленности).

FORSTAR®

Телефон: 8 (812) 309-75-97 (многоканальный)
Факс: 8 (812) 320-03-32
Электронная почта: ocean@oceanchips.ru
Web: http://oceanchips.ru/
Адрес: 198099, г. Санкт-Петербург, ул. Калинина, д. 2, корп. 4, лит. А