Precision, 16-Channel/Dual 8-Channel, High-Performance, CMOS Analog Multiplexers

General Description

The MAX306/MAX307 precision, monolithic, CMOS analog multiplexers (muxes) offer low on-resistance (less than 100Ω), which is matched to within 5Ω between channels and remains flat over the specified analog signal range (7Ω, max). They also offer low leakage over temperature ($I_{NO(OFF)}$ less than 2.5nA at +85°C) and fast switching speeds (t_{TRANS} less than 250ns). The MAX306 is a single-ended 1-of-16 device, and the MAX307 is a differential 2-of-8 device.

The MAX306/MAX307 are fabricated with Maxim's improved 44V silicon-gate process. Design improvements yield extremely low charge injection (less than 10pC) and guarantee electrostatic discharge (ESD) protection greater than 2000V.

These muxes operate with a single +5V to +30V supply, or bipolar ±4.5V to ±20V supplies, while retaining TTL/CMOS-logic input compatibility and fast switching. CMOS inputs provide reduced input loading. These improved parts are plug-in upgrades for the industrystandard DG406, DG407, DG506A, and DG507A.

Applications

- Sample-and-Hold Circuits
- Test Equipment
- Heads-Up Displays
- Guidance and Control Systems
- Military Radios
- Communications Systems
- Battery-Operated Systems PBX, PABX
- Audio Signal Routing

Benefits and Features

- Guaranteed On-Resistance Match Between Channels, < 5Ω Max
- Low On-Resistance, < 100Ω Max
- Guaranteed Flat On-Resistance Over Specified Signal Range, 7Ω Max
- Guaranteed Charge Injection, < 10pC
- $I_{NO(OFF)}$ Leakage < 2.5nA at +85°C
- $I_{COM(OFF)}$ Leakage < 20nA at +85°C
- ESD Protection > 2000V
- Plug-In Upgrade for Industry-Standard DG406/DG407/DG506A/DG507A
- Single-Supply Operation (+5V to +30V) Bipolar-Supply Operation (±4.5V to ±20V)
- Low Power Consumption, < 1.25mW
- Rail-to-Rail Signal Handling
- TTL/CMOS-Logic Compatible

Ordering Information

PART	TEMP RANGE	PIN-PACKAGE
MAX306CPI	0°C to +70°C	28 PDIP
MAX306CWI	0°C to +70°C	28 Wide SO
MAX306C/D	0°C to +70°C	Dice*
MAX306EPI	-40°C to +85°C	28 PDIP
MAX306EWI	-40°C to +85°C	28 Wide SO
MAX306EQI	-40°C to +85°C	28 PLCC
MAX306EUI	-40°C to +85°C	28 TSSOP
MAX306MJI	-55°C to +125°C	28 CERDIP

Ordering Information continued at end of data sheet.

**Contact factory for dice specifications.*

Pin Configurations/Functional Diagrams/Truth Tables

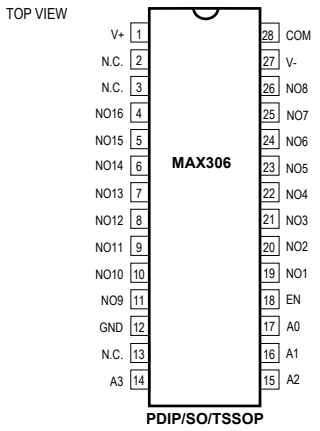

A3	A2	A1	A0	EN	ON Switch
X	X	X	X	0	None
0	0	0	0	1	1
0	0	0	1	1	2
0	0	1	0	1	3
0	0	1	1	1	4
0	1	0	0	1	5
0	1	0	1	1	6
0	1	1	0	1	7
0	1	1	1	1	8
1	0	0	0	1	9
1	0	0	1	1	10
1	0	1	0	1	11
1	0	1	1	1	12
1	1	0	0	1	13
1	1	0	1	1	14
1	1	1	0	1	15
1	1	1	1	1	16

MAX306
LOGIC "0" $V_{AL} \leq 0.8V$, LOGIC "1" = $V_{AH} \geq 2.4V$

Pin Configurations/Functional Diagrams/Truth Tables continued at end of data sheet.

Absolute Maximum Ratings

(Voltage Referenced to V-)
- V+ ..... -0.3V, +44V
- GND ..... -0.3V, +25V

Digital Inputs, NO, COM (Note 1) ..... (V- - 2V) to (V+ + 2V) or 30mA (whichever occurs first)

Continuous Current (any terminal) 30mA

Peak Current, NO or COM
- (pulsed at 1ms, 10% duty cycle max) 100mA

Continuous Power Dissipation (T_A = +70°C)
- Plastic DIP (derate 9.09mW/°C above +70°C) 727mW
- Wide SO (derate 12.50mW/°C above +70°C) 1000mW
- PLCC (derate 10.53mW/°C above +70°C) 842mW
- CERDIP (derate 16.67mW/°C above +70°C) 1333mW
- TSSOP (derate 12.8mW/°C above +70°C) 1025mW

Operating Temperature Ranges
- MAX30_C_ _ ..... 0°C to +70°C
- MAX30_E_ _ ..... -40°C to +85°C
- MAX30_MJI ..... -55°C to +125°C

Storage Temperature Range ..... -65°C to +150°C

Lead Temperature (soldering, 10s) ..... +300°C

Soldering Temperature (reflow)
- PDIP, Wide SO, TSSOP lead(Pb)-free ..... +260°C
- PDIP, Wide SO, TSSOP containing lead(Pb) ..... +240°C
- PLCC lead(Pb)-free ..... +245°C
- PLCC containing lead(Pb) ..... +225°C
- CERDIP ..... +240°C

Note 1: Signals on NO, COM, A0, A1, A2, A3, or EN exceeding V+ or V- are clamped by internal diodes. Limit forward current to maximum current ratings.

Stresses beyond those listed under "Absolute Maximum Ratings" may cause permanent damage to the device. These are stress ratings only, and functional operation of the device at these or any other conditions beyond those indicated in the operational sections of the specifications is not implied. Exposure to absolute maximum rating conditions for extended periods may affect device reliability.

Electrical Characteristics—Dual Supplies

(V+ = +15V, V- = -15V, GND = 0V, V_{AH} = +2.4V, V_{AL} = +0.8V, T_A = T_{MIN} to T_{MAX}, unless otherwise noted.)

PARAMETER	SYMBOL	CONDITIONS				MIN	TYP (Note 2)	MAX	UNITS
SWITCH									
Analog Signal Range	V_{NO}, V_{COM}	(Note 3)				-15		+15	V
On-Resistance	R_{ON}	I_{NO} = -1.0mA, V_{COM} = ±10V		T_A = +25°C			60	100	Ω
				T_A = T_{MIN} to T_{MAX}				125	
On-Resistance Matching Between Channels	ΔR_{ON}	I_{NO} = -1.0mA, V_{COM} = ±10V (Note 4)		T_A = +25°C			1.5	5	Ω
				T_A = T_{MIN} to T_{MAX}				8	
On-Resistance Flatness	R_{FLAT}	I_{NO} = -1.0mA, V_{COM} = ±5V or 0V		T_A = +25°C			1.8	7	Ω
				T_A = T_{MIN} to T_{MAX}				10	
NO Off-Leakage Current (Note 5)	$I_{NO(OFF)}$	V_{COM} = +10V, V_{NO} = ±10V, V_{EN} = 0V		T_A = +25°C		-0.5	+0.01	+0.5	nA
				T_A = T_{MIN} to T_{MAX}	C, E	-2.5		+2.5	
					M	-5.0		+5.0	
COM Off-Leakage Current (Note 5)	$I_{COM(OFF)}$	V_{NO} = ±10V, V_{COM} = +10V, V_{EN} = 0V	MAX306	T_A = +25°C		-0.75	+0.02	+0.75	nA
				T_A = T_{MIN} to T_{MAX}	C, E	-20		+20	
					M	-40		+40	
		V_{NO} = +10V, V_{COM} = ±10V, V_{EN} = 0V	MAX307	T_A = +25°C		-0.75	+0.02	+0.75	
				T_A = T_{MIN} to T_{MAX}	C, E	-10		+10	
					M	-20		+20	

Electrical Characteristics—Dual Supplies (continued)

(V+ = +15V, V- = -15V, GND = 0V, V_{AH} = +2.4V, V_{AL} = +0.8V, T_A = T_{MIN} to T_{MAX}, unless otherwise noted.)

PARAMETER	SYMBOL	CONDITIONS				MIN	TYP (Note 2)	MAX	UNITS
COM On-Leakage Current (Note 5)	$I_{COM(ON)}$	V_{COM} = ±10V, V_{NO} = ±10V, Sequence each switch on	MAX306	T_A = +25°C		-0.75	+0.02	+0.75	nA
				T_A = T_{MIN} to T_{MAX}	C, E	-25		+25	
					M	-50		+50	
			MAX307	T_A = +25°C		-0.75	+0.02	+0.75	
				T_A = T_{MIN} to T_{MAX}	C, E	-12.5		+12.5	
					M	-25		+25	
INPUT									
Input Current with Input Voltage High	I_{AH}	V_A = 2.4V or 15V				-1.0		+1.0	µA
Input Current with Input Voltage Low	I_{AL}	V_{EN} = 0V or 2.4V, V_A = 0V				-1.0		+1.0	µA
SUPPLY									
Power-Supply Range						±4.5		±20	V
Positive Supply Current	I+	V_{EN} = V_A = 0V or 5.0V		T_A = +25°C			16	30	µA
				T_A = T_{MIN} to T_{MAX}				75	
		V_{EN} = 2.4V, $V_{A(ALL)}$ = 0V		T_A = +25°C			0.075	0.5	mA
				T_A = T_{MIN} to T_{MAX}				1	
Negative Supply Current	I-	V_{EN} = 2.4V, $V_{A(ALL)}$ = 0V		T_A = +25°C		-1		+1	µA
				T_A = T_{MIN} to T_{MAX}		-10		+10	
DYNAMIC									
Transition Time (Note 3)	t_{TRANS}	Figure 2		T_A = +25°C			110	300	ns
				T_A = T_{MIN} to T_{MAX}				400	
Break-Before-Make Interval	t_{OPEN}	Figure 4		T_A = +25°C		10	40		ns
Enable Turn-On Time (Note 3)	$t_{ON(EN)}$	Figure 3		T_A = +25°C			130	200	ns
				T_A = T_{MIN} to T_{MAX}				400	
Enable Turn-Off Time (Note 3)	$t_{OFF(EN)}$	Figure 3		T_A = +25°C			55	150	ns
				T_A = T_{MIN} to T_{MAX}				300	
Charge Injection (Note 3)	Q	C_L = 1.0nF, V_{NO} = 0V, R_S = 0Ω, Figure 5		T_A = +25°C			2	10	pC
Off-Isolation (Note 6)	V_{ISO}	V_{EN} = 0V, R_L = 1kΩ, f_{SW} = 100kHz, Figure 6		T_A = +25°C			-69		dB
Crosstalk Between Channels	V_{CT}	V_{EN} = 2.4V, f_{SW} = 100kHz, V_{GEN} = $1V_{P-P}$, R_L = 1kΩ, Figure 7		T_A = +25°C			-92		dB
Logic Input Capacitance	C_{IN}	f_{SW} = 1MHz		T_A = +25°C			8		pF

Electrical Characteristics—Single Supply

(V+ = +12V, V- = 0V, GND = 0V, V_{AH} = +2.4V, V_{AL} = +0.8V, T_A = T_{MIN} to T_{MAX}, unless otherwise noted.)

PARAMETER	SYMBOL	CONDITIONS			MIN	TYP (Note 2)	MAX	UNITS
NO Off-Capacitance	$C_{NO(OFF)}$	f_{SW} = 1MHz, V_{EN} = V_{NO} = 0V, Figure 8		T_A = +25°C		8		pF
COM Off-Capacitance	$C_{COM(OFF)}$	f_{SW} = 1MHz, V_{EN} = 0.8V, V_{COM} = 0V, Figure 8	MAX306	T_A = +25°C		130		pF
			MAX307			65		
COM On-Capacitance	$C_{COM(ON)}$	f_{SW} = 1MHz, V_{EN} = 2.4V, V_{COM} = 0V, Figure 8	MAX306	T_A = +25°C		140		pF
			MAX307			70		
SWITCH								
Analog Signal Range	V_{NO}, V_{COM}	(Note 3)			0		12	V
On-Resistance	R_{ON}	I_{NO} = -1.0mA V_{COM} = 3V or 10V		T_A = +25°C		120	175	Ω
DYNAMIC								
Transition Time (Note 3)	t_{TRANS}	V_{NO1} = 8V, V_{NO8} = 0V, V_{IN} = 2.4V, Figure 2		T_A = +25°C		130	450	ns
Enable Turn-On Time (Note 3)	$t_{ON(EN)}$	V_{INH} = 2.4V, V_{INL} = 0V, V_{NO1} = 5V, Figure 3		T_A = +25°C		105	600	ns
Enable Turn-Off Time (Note 3)	$t_{OFF(EN)}$	V_{INH} = 2.4V, V_{INL} = 0V, V_{NO1} = 5V, Figure 3		T_A = +25°C		80	300	ns
Charge Injection (Note 3)	Q	C_L = 1.0nF, V_{NO} = 0V, R_S = 0Ω		T_A = +25°C		2	10	pC

Note 2: The algebraic convention where the most negative value is a minimum and the most positive value a maximum is used in this data sheet.

Note 3: Guaranteed by design.

Note 4: $\Delta R_{ON} = R_{ON(MAX)} - R_{ON(MIN)}$. On-resistance match between channels and flatness are guaranteed only with specified voltages. Flatness is defined as the difference between the maximum and minimum value of on-resistance as measured at the extremes of the specified analog signal range.

Note 5: Leakage parameters are 100% tested at the maximum-rated hot temperature and guaranteed by correlation at +25°C.

Note 6: Off-isolation = 20log V_{COM}/V_{NO}, where V_{COM} = output and V_{NO} = input to off switch.

Typical Operating Characteristics

(T_A = +25°C, unless otherwise noted.)

ON-RESISTANCE vs. V_{COM} (DUAL SUPPLIES)

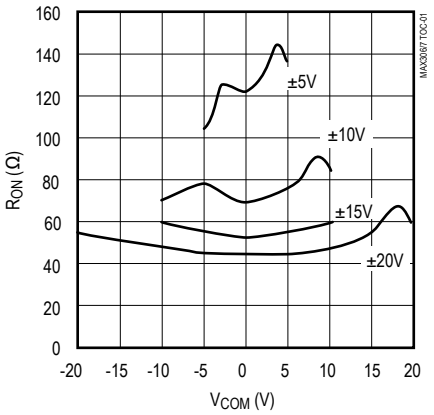

ON-RESISTANCE vs. V_{COM} AND TEMPERATURE (DUAL SUPPLIES)

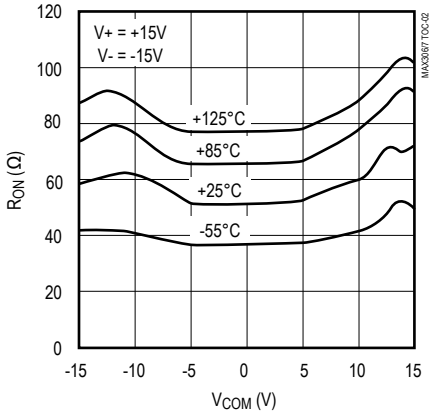

ON-RESISTANCE vs. V_{COM} (SINGLE SUPPLY)

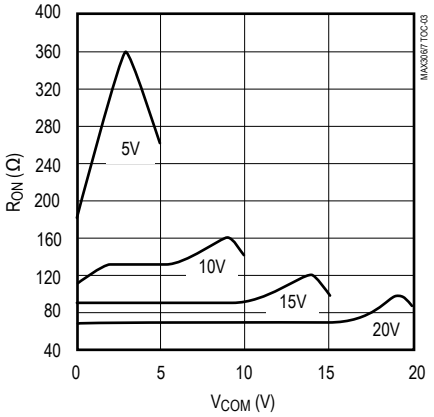

ON-RESISTANCE vs. V_{COM} AND TEMPERATURE (SINGLE SUPPLY)

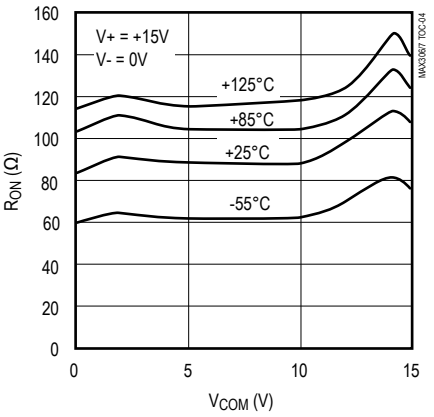

OFF-LEAKAGE vs. TEMPERATURE

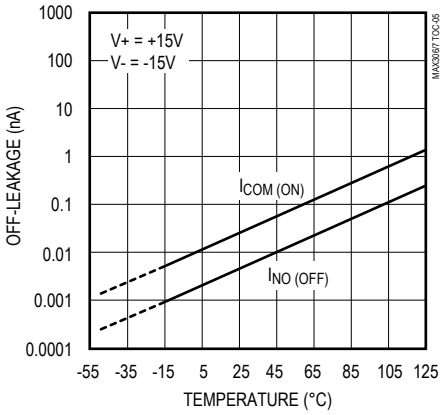

ON-LEAKAGE vs. TEMPERATURE

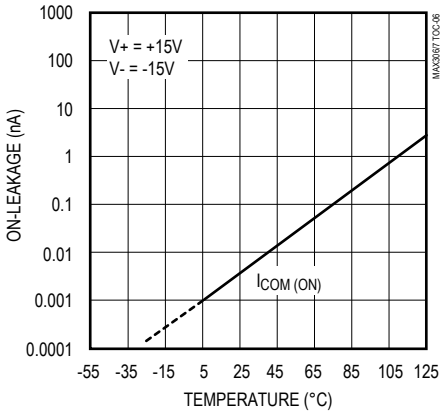

CHARGE INJECTION vs. V_{COM}

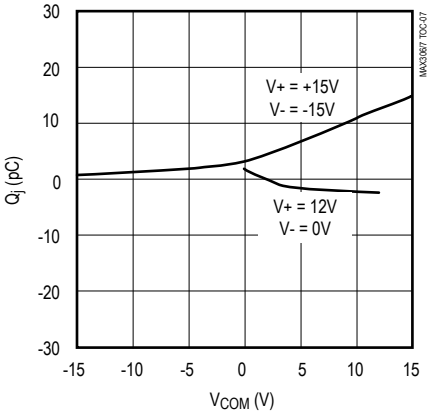

SUPPLY CURRENT vs. TEMPERATURE

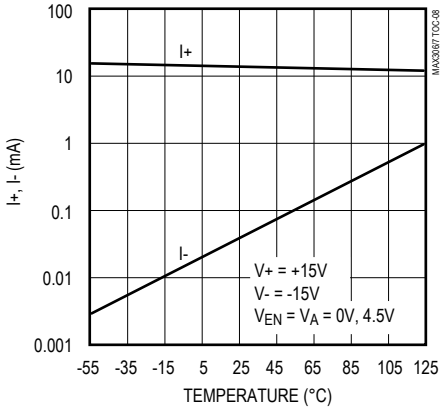

Pin Description

MAX306 PIN	NAME	FUNCTION
1	V+	Positive Supply Voltage Input
2, 3, 13	N.C.	No Connection. Not internally connected.
4–11	NO16–NO9	Analog Inputs–bidirectional
12	GND	Ground
14–17	A3–A0	Address Inputs
18	EN	Enable Inputs
19–26	NO1–NO8	Analog Inputs–bidirectional
27	V-	Negative Supply Voltage Input
28	COM	Output–bidirectional

MAX307 PIN	NAME	FUNCTION
1	V+	Positive Supply Voltage Input
2	COMB	Output B–bidirectional
3, 13, 14	N.C.	No Connection. Not internally connected.
4–11	NO8B–NO1B	Analog Inputs–bidirectional
12	GND	Ground
15, 16, 17	A2, A1, A0	Address Inputs
18	EN	Enable Input
19–26	NO1A–NO8A	Analog Inputs–bidirectional
27	V-	Negative Supply Voltage Input
28	COMA	Output A–bidirectional

Applications Information

Operation with Supply Voltages Other than ±15V

Using supply voltages other than ±15V will reduce the analog signal range. The MAX306/MAX307 switches operate with ±4.5V to ±20V bipolar supplies or with a +5V to +30V single supply; connect V- to GND when operating with a single supply. Also, both device types can operate with unbalanced supplies such as +24V and -5V. The *Typical Operating Characteristics* graphs show typical on-resistance with 20V, 15V, 10V, and 5V supplies. (Switching times increase for 5V operation, up to a maximum of 10µs.)

Overvoltage Protection

Proper power-supply sequencing is recommended for all CMOS devices. Do not exceed the absolute maximum ratings because stresses beyond the listed ratings may cause permanent damage to the devices. Always sequence V+ on first, then V-, followed by either the logic inputs, NO or COM. If power-supply sequencing is not possible, add two small-signal diodes in series with supply pins for overvoltage protection (Figure 1). Adding diodes reduces the analog signal range to 1V above V+ and 1V below V-, but low switch resistance and low leakage characteristics are unaffected. Device operation is unchanged, and the difference between V+ and V- should not exceed +44V.

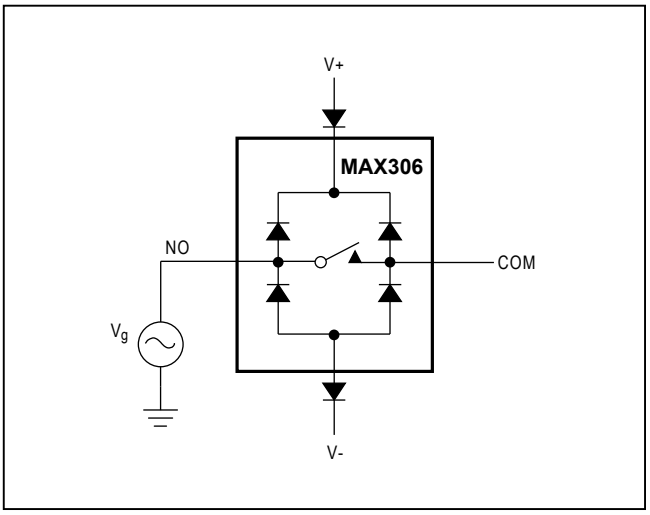

Figure 1. Overvoltage Protection Using External Blocking Diodes

Test Circuits/Timing Diagrams

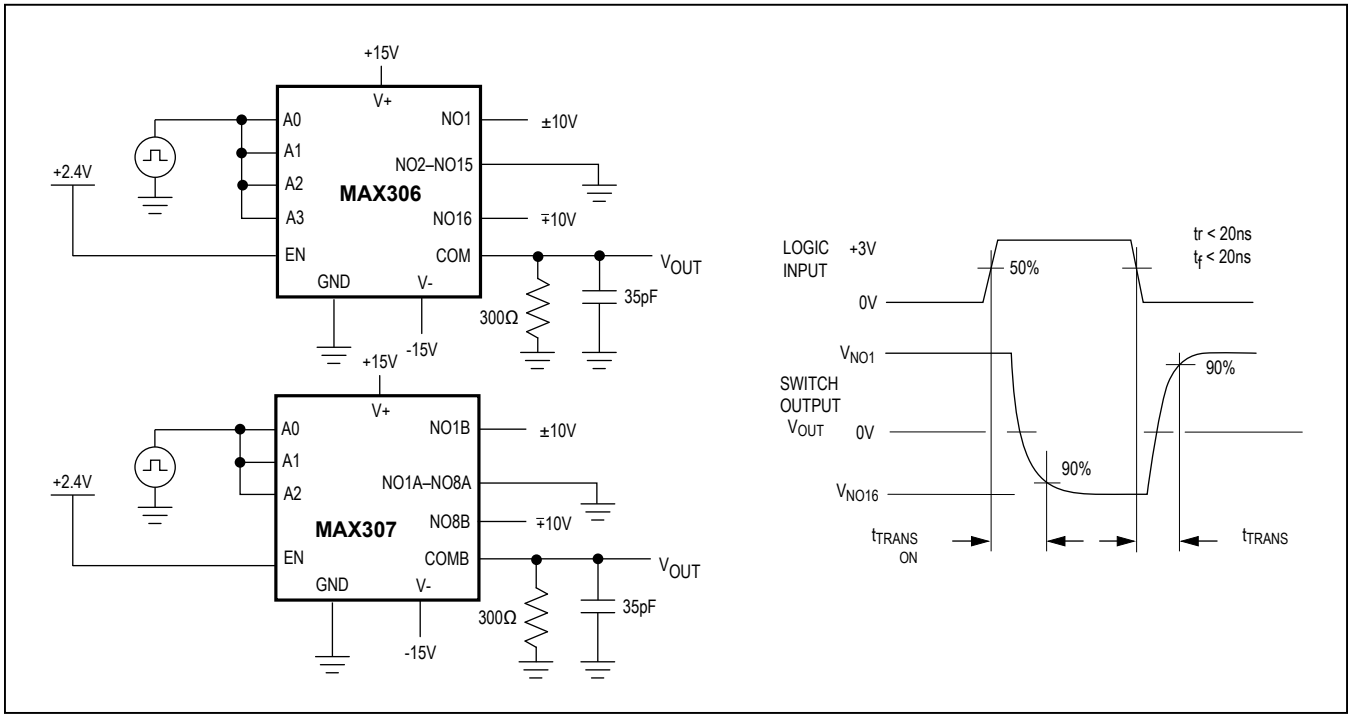

Figure 2. Transition Time

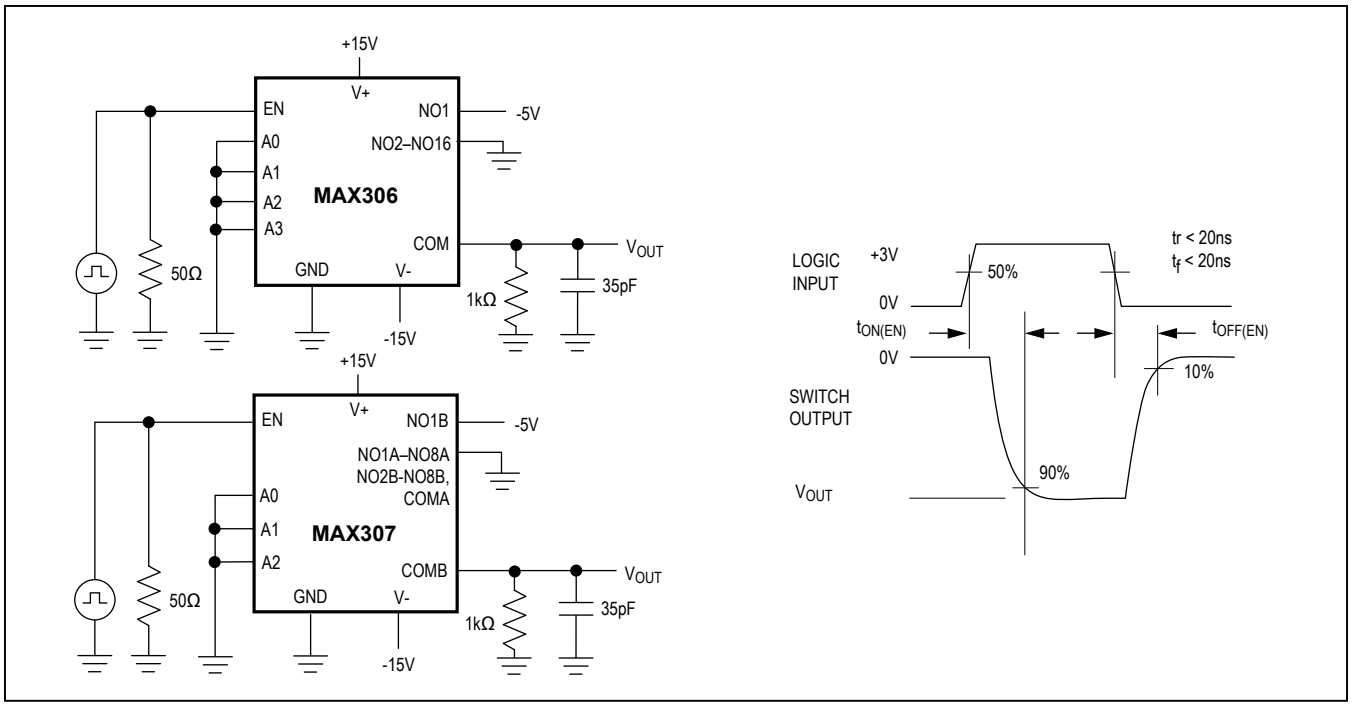

Figure 3. Enable Switching Time

Test Circuits/Timing Diagrams (continued)

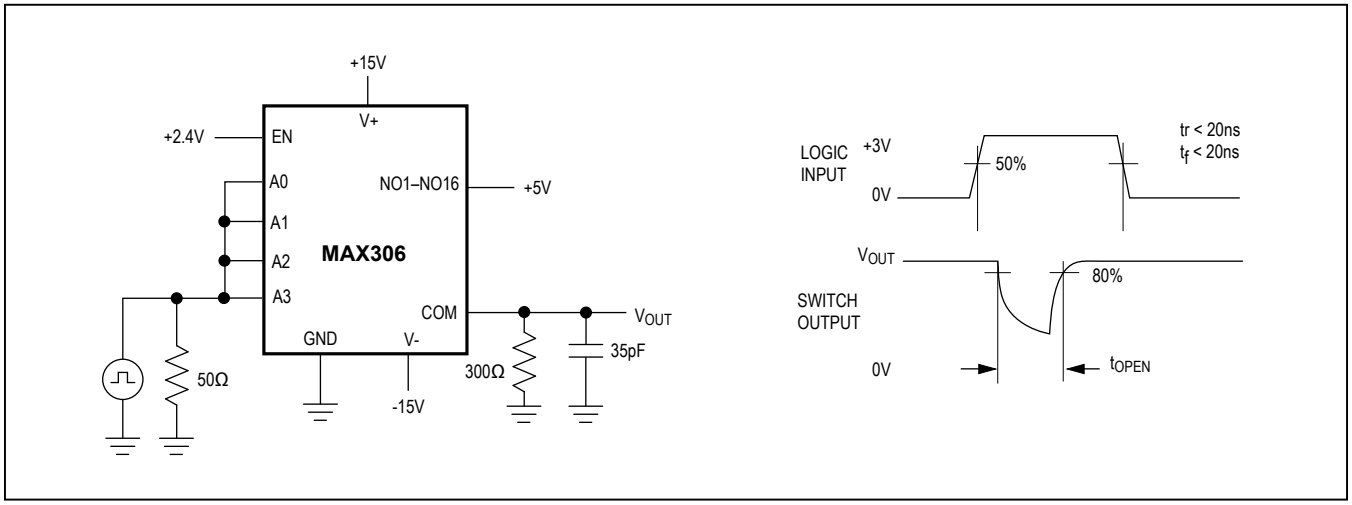

Figure 4. Break-Before-Make Interval

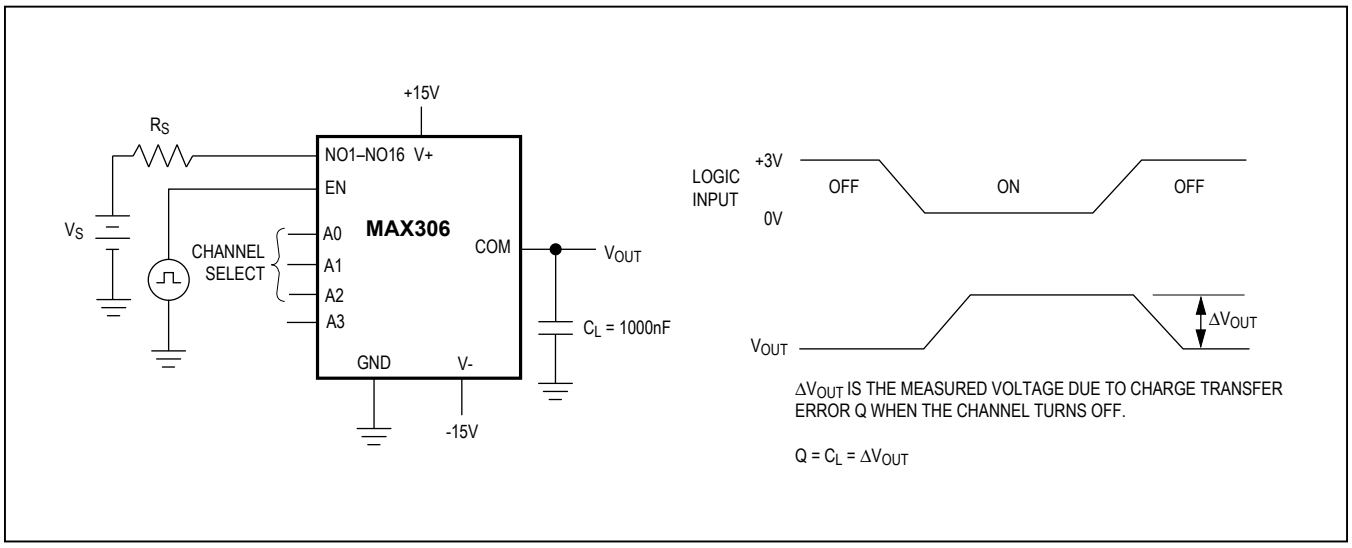

Figure 5. Charge Injection

Test Circuits/Timing Diagrams (continued)

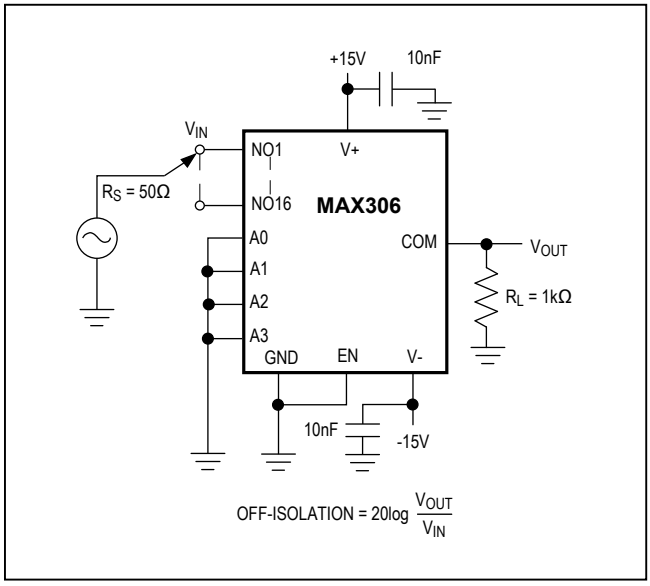

Figure 6. Off-Isolation

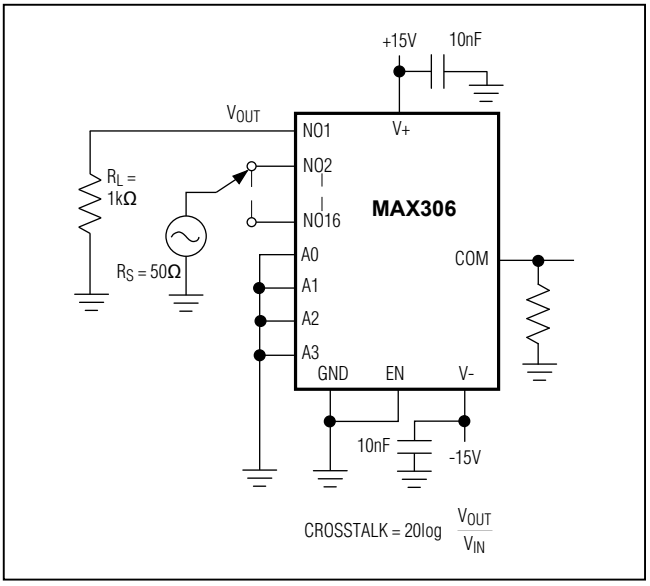

Figure 7. Crosstalk

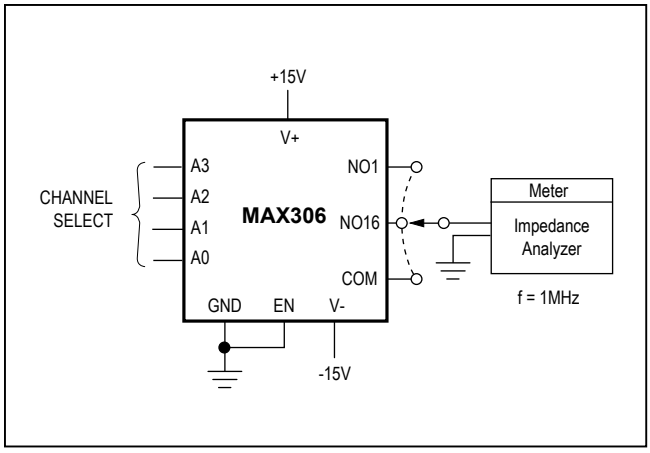

Figure 8. NO/COM Capacitance

Pin Configurations/Functional Diagrams/Truth Tables (continued)

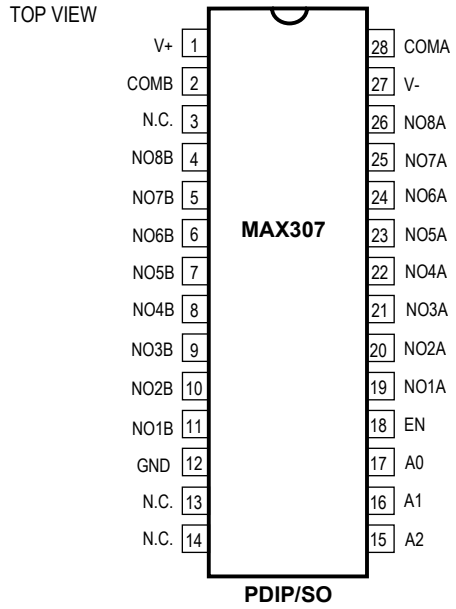

A2	A1	A0	EN	ON Switch
X	X	X	0	None
0	0	0	1	1
0	0	1	1	2
0	1	0	1	3
0	1	1	1	4
1	0	0	1	5
1	0	1	1	6
1	1	0	1	7
1	1	1	1	8

MAX307

LOGIC "0" $V_{AL} \leq 0.8V$, LOGIC "1" = $V_{AH} \geq 2.4V$

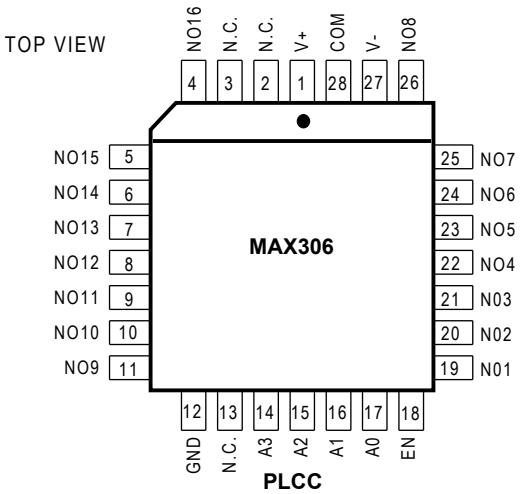

N.C. = NO INTERNAL CONNECTION

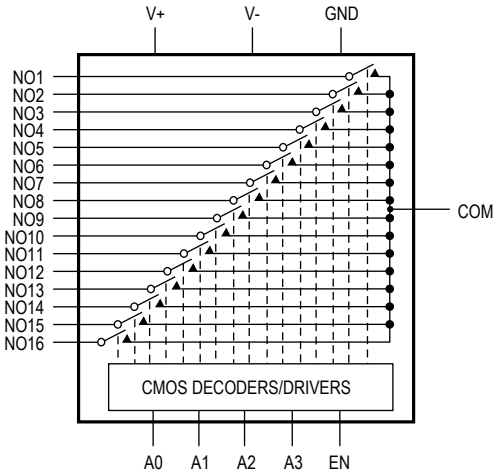

MAX306 16-CHANNEL SINGLE-ENDED MULTIPLEXER

Pin Configurations/Functional Diagrams/Truth Tables (continued)

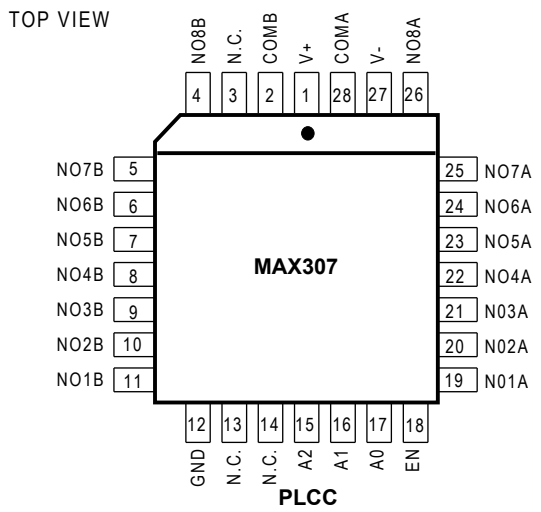

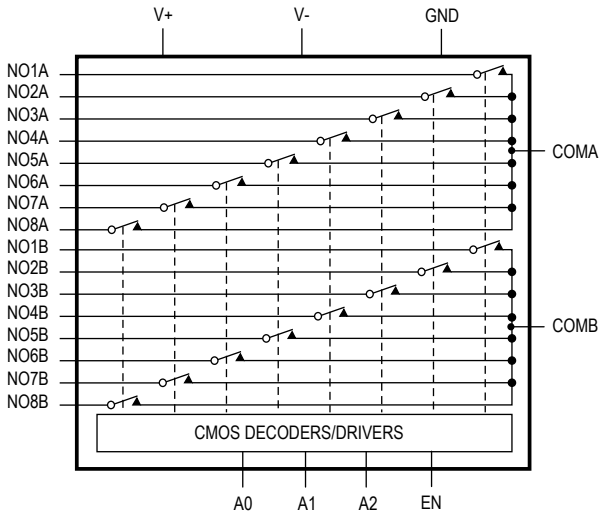

MAX307 8-CHANNEL DIFFERENTIAL MULTIPLEXER

Ordering Information (continued)

PART	TEMP RANGE	PIN-PACKAGE
MAX307CPI	0°C to +70°C	28 PDIP
MAX307CWI	0°C to +70°C	28 Wide SO
MAX307C/D	0°C to +70°C	Dice*
MAX307EPI	-40°C to +85°C	28 PDIP
MAX307EWI	-40°C to +85°C	28 Wide SO
MAX307EQI	-40°C to +85°C	28 PLCC
MAX307EUI	-40°C to +85°C	28 TSSOP
MAX307MJI	-55°C to +125°C	28 CERDIP
MAX307MWI/PR	-55°C to +125°C	28 Wide SO
MAX307MWI/PR-T	-55°C to +125°C	28 Wide SO

**Contact factory for dice specifications.*

Package Information

For the latest package outline information and land patterns (footprints), go to **www.maximintegrated.com/packages**. Note that a "+", "#", or "-" in the package code indicates RoHS status only. Package drawings may show a different suffix character, but the drawing pertains to the package regardless of RoHS status.

PACKAGE TYPE	PACKAGE CODE	OUTLINE NO.	LAND PATTERN NO.
28 PDIP	P28+3	21-0044	—
28 Wide SO	W28+6	21-0042	90-0109
28 PLCC	Q28+4	21-0049	90-0235
28 CDIP	J28-2	21-0046	—
28 TSSOP	U28+2	21-0066	90-0171

Revision History

REVISION NUMBER	REVISION DATE	DESCRIPTION	PAGES CHANGED
3	3/10	Changed the single-supply operating voltage minimum from +4.5V to +5V in the *General Description*, *Features*, and *Applications Information* sections.	1, 6
		Added the soldering temperatures for all packages to the *Absolute Maximum Ratings* section.	2
4	5/14	Added MAX307MWI/PR and MAX307MWI/PR-T to the *Ordering Information* table.	11
5	3/16	Updated *Electrical Characteristics* table and Figure 2	3, 4, 6, 7

For pricing, delivery, and ordering information, please contact Maxim Direct at 1-888-629-4642, or visit Maxim Integrated's website at www.maximintegrated.com.

Maxim Integrated cannot assume responsibility for use of any circuitry other than circuitry entirely embodied in a Maxim Integrated product. No circuit patent licenses are implied. Maxim Integrated reserves the right to change the circuitry and specifications without notice at any time. The parametric values (min and max limits) shown in the Electrical Characteristics table are guaranteed. Other parametric values quoted in this data sheet are provided for guidance.

Maxim Integrated and the Maxim Integrated logo are trademarks of Maxim Integrated Products, Inc. © 2016 Maxim Integrated Products, Inc.

OCEAN CHIPS
Океан Электроники
Поставка электронных компонентов

Компания «Океан Электроники» предлагает заключение долгосрочных отношений при поставках импортных электронных компонентов на взаимовыгодных условиях!

Наши преимущества:

- Поставка оригинальных импортных электронных компонентов напрямую с производств Америки, Европы и Азии, а так же с крупнейших складов мира;
- Широкая линейка поставок активных и пассивных импортных электронных компонентов (более 30 млн. наименований);
- Поставка сложных, дефицитных, либо снятых с производства позиций;
- Оперативные сроки поставки под заказ (от 5 рабочих дней);
- Экспресс доставка в любую точку России;
- Помощь Конструкторского Отдела и консультации квалифицированных инженеров;
- Техническая поддержка проекта, помощь в подборе аналогов, поставка прототипов;
- Поставка электронных компонентов под контролем ВП;
- Система менеджмента качества сертифицирована по Международному стандарту ISO 9001;
- При необходимости вся продукция военного и аэрокосмического назначения проходит испытания и сертификацию в лаборатории (по согласованию с заказчиком);
- Поставка специализированных компонентов военного и аэрокосмического уровня качества (Xilinx, Altera, Analog Devices, Intersil, Interpoint, Microsemi, Actel, Aeroflex, Peregrine, VPT, Syfer, Eurofarad, Texas Instruments, MS Kennedy, Miteq, Cobham, E2V, MA-COM, Hittite, Mini-Circuits, General Dynamics и др.);

Компания «Океан Электроники» является официальным дистрибьютором и эксклюзивным представителем в России одного из крупнейших производителей разъемов военного и аэрокосмического назначения **«JONHON»**, а так же официальным дистрибьютором и эксклюзивным представителем в России производителя высокотехнологичных и надежных решений для передачи СВЧ сигналов **«FORSTAR»**.

AVIC JONHON

«JONHON» (основан в 1970 г.)

Разъемы специального, военного и аэрокосмического назначения:

(Применяются в военной, авиационной, аэрокосмической, морской, железнодорожной, горно- и нефтедобывающей отраслях промышленности)

«FORSTAR» (основан в 1998 г.)

ВЧ соединители, коаксиальные кабели, кабельные сборки и микроволновые компоненты:

(Применяются в телекоммуникациях гражданского и специального назначения, в средствах связи, РЛС, а так же военной, авиационной и аэрокосмической отраслях промышленности).

FORSTAR®

Телефон: 8 (812) 309-75-97 (многоканальный)
Факс: 8 (812) 320-03-32
Электронная почта: ocean@oceanchips.ru
Web: http://oceanchips.ru/
Адрес: 198099, г. Санкт-Петербург, ул. Калинина, д. 2, корп. 4, лит. А