DS1804
Nonvolatile Trimmer Potentiometer

FEATURES

- **Single 100-Position Taper Potentiometer**
- **Nonvolatile (NV) On-Demand Wiper Storage**
- **Operates from 3V or 5V Supplies**
- **Up/Down, Increment-Controlled Interface**
- **Available in 8-Pin (300 mils) DIP, 8-Pin (150 mils) SO, and 8-Pin (118 mils) µSOP**
- **-40°C to +85°C Operating Temperature Range**
- **Standard Resistance Values:**
  - **DS1804-010: 10kΩ**
  - **DS1804-050: 50kΩ**
  - **DS1804-100: 100kΩ**

PIN ASSIGNMENT

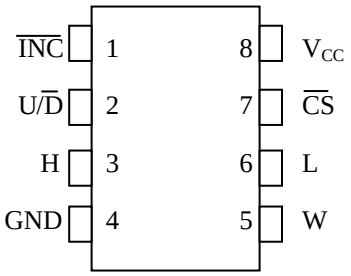

DIP (300 mils)
SO (150 mils)
µSOP (118 mils)

PIN DESCRIPTION

H	-	High-Terminal of Potentiometer
L	-	Low-Terminal of Potentiometer
W	-	Wiper of Potentiometer
V_{CC}	-	3V or 5V Power Supply
$\overline{CS}$	-	Chip Select
U/$\overline{D}$	-	Up/Down Control
$\overline{INC}$	-	Increment/Decrement Wiper Control
GND	-	Ground

DESCRIPTION

The DS1804 NV trimmer potentiometer is a nonvolatile digital potentiometer that has 100 positions. The device provides an ideal method for low-cost trimming applications using a CPU or manual control input with minimal external circuitry. Wiper position of the DS1804 can be stored in EEPROM memory on demand. The device's wiper position is manipulated by a three-terminal port that provides an increment/decrement counter controlled interface. This port consists of the control inputs $\overline{CS}$, $\overline{INC}$, and U/$\overline{D}$. The DS1804 is available in three resistor grades, which include a 10kΩ, 50kΩ, and 100kΩ. The device is provided in an industrial temperature grade. Additionally, the DS1804 will operate from 3V or 5V supplies and is ideal for portable application requirements. Three packaging options are available and include the 8-pin (300 mils) DIP, 8-pin (150 mils) SO, and 8-pin (118 mils) µSOP.

OPERATION

The DS1804 is a single nonvolatile potentiometer. The device has a total of 100 tap-points including the L- and H- terminals. A total of 99 resistive segments exist between the L- and H- terminals. These tap-points are accessible to the W-terminal, whose position is controlled via a three-terminal control port. A block diagram of the DS1804 is shown in Figure 1.

The three-terminal port of the DS1804 provides an increment/decrement interface which is activated via a chip-select input. This interface consists of the input signals $\overline{CS}$, $\overline{INC}$, and U/$\overline{D}$. These input signals control a 7-bit up/down counter. The output of the 7-bit up/down counter controls a 1 of 100 decoder to select wiper position. Additionally, this interface provides for a wiper storage operation using the $\overline{CS}$ and $\overline{INC}$ input control pins. The timing diagram for the three-terminal interface control is shown in Figure 2.

PIN DESCRIPTIONS

V_{CC} - Power Supply. The DS1804 will support supply voltages ranging from +2.7V to +5.5V.

GND - Ground.

H - High-Terminal Potentiometer. This is the high terminal of the potentiometer. It is not required that this terminal be connected to a potential greater than the L-terminal. Voltage applied to the H-terminal cannot exceed the power-supply voltage, V_{CC}, or go below ground.

L - Low-Terminal Potentiometer. This is the low terminal of the potentiometer. It is not required that this terminal be connected to a potential less than the H-terminal. Voltage applied to the L-terminal cannot exceed the power-supply voltage, V_{CC}, or go below ground.

W - Wiper of the Potentiometer. This pin is the wiper of the potentiometer. Its position on the resistor array is controlled by the three-terminal control port. Voltage applied to the wiper cannot exceed the power-supply voltage, V_{CC}, or go below ground.

$\overline{CS}$ - Chip Select. The $\overline{CS}$ input is used to activate the control port of the DS1804. This input is active low. When in a high-state, activity on the $\overline{INC}$ and U/$\overline{D}$ port pins will not affect or change wiper position.

$\overline{INC}$ - Wiper Movement Control. This input provides for wiper position changes when the $\overline{CS}$ pin is low. Wiper position changes of the W-terminal will occur one position per high-to-low transition of this input signal. Position changes will not occur if the $\overline{CS}$ pin is in a high state.

U/$\overline{D}$ - Up/Down Control. This input sets the direction of wiper movement. When in a high state and $\overline{CS}$ is low, any high-to-low transition on $\overline{INC}$ will cause a one position movement of the wiper towards the H-terminal. When in a low state and $\overline{CS}$ is low, any high-to-low transitions on $\overline{INC}$ will cause the position of the wiper to move towards the L-terminal.

DS1804 BLOCK DIAGRAM Figure 1

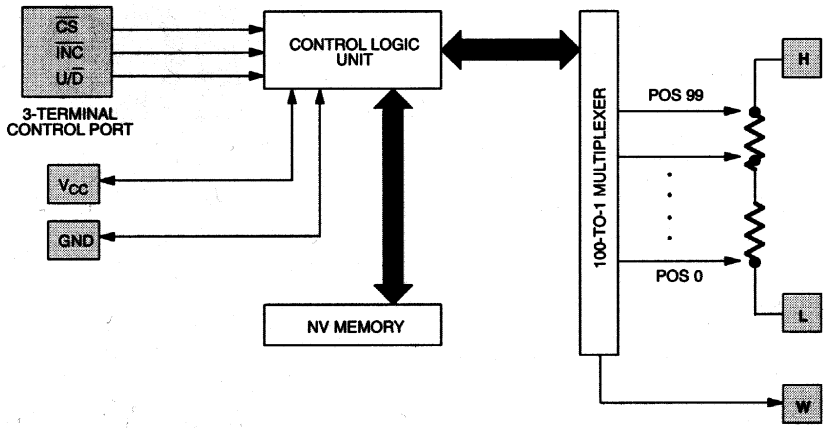

POWER-UP/POWER-DOWN CONDITIONS

On power-up, the DS1804 will load the value of EEPROM memory into the wiper position register (or 1 of 100 decoder). The value of this register can then be set to another wiper position if desired, by using the three-terminal control port. On power-up, wiper position will be loaded within a maximum time period of 500µs once the power-supply is stable. Additionally, the three-terminal interface port will be active after 50ms.

On power-down, the wiper position register data will be lost. On the next device power-up, the value of EEPROM memory will be loaded into the wiper position register.

On shipment from the factory, Maxim Integrated Products does not guarantee a specified EEPROM memory value. This value should be set by the customer as needed.

NONVOLATILE WIPER STORAGE

Wiper position of the DS1804 can be stored using the $\overline{INC}$ and $\overline{CS}$ inputs. Storage of the wiper position takes place whenever the $\overline{CS}$ input transitions from low-to-high while the $\overline{INC}$ is high. Once this condition has occurred the value of the current wiper position will be written to EEPROM memory.

The DS1804 is specified to accept 50,000 writes to EEPROM over 0°C to 70ºC before a wear-out condition. After wear-out the DS1804 will still function and wiper position can be changed during powered conditions using the three-terminal control port. However, on power-up the wiper-position will be indeterminate.

ONE-TIME PROGRAMMABILITY (OTP)

The DS1804 can be easily used as an OTP device. The user of the DS1804 can trim the desired value of the wiper position and set this position for storage as described above. Any activity through the three-terminal port can then be prevented by connecting the $\overline{CS}$ input pin to V_{CC}. Also, an OTP application does not adversely affect the number of times EEPROM is written, since EEPROM will only be loaded and *not written* during a power-up or power-down condition.

On power-up, the DS1804 will load the current value of EEPROM memory into the wiper position register.

ABSOLUTE MAXIMUM RATINGS

Voltage on Any Pin Relative to Ground	-1.0V to +6.0V
Operating Temperature Range	-40°C to +85°C
Storage Temperature Range	-55°C to +125°C
Lead Temperature (soldering, 10s)	+300°C
Soldering Temperature (reflow)	+260°C

This is a stress rating only and functional operation of the device at these or any other conditions above those indicated in the operation sections of this specification is not implied. Exposure to absolute maximum rating conditions for extended periods of time may affect reliability.

RECOMMENDED DC OPERATING CONDITIONS

(T_A = -40°C to +85°C, unless otherwise noted.)

PARAMETER	SYMBOL	MIN	TYP	MAX	UNITS	NOTES
Supply Voltage	V_{CC}	+2.7		5.5	V	1
Input Logic 1	V_{IH}	2.0		V_{CC} + 0.3	V	1, 2
Input Logic 0	V_{IL}	-0.3		+0.8 +0.6	V	1, 15
Resistor Inputs	L, H, W	V_{GND} - 0.2		V_{CC} + 0.2	V	1, 3

DC ELECTRICAL CHARACTERISTICS

(V_{CC} = 2.7V to 5.5V, T_A = -40°C to +85°C, unless otherwise noted.)

PARAMETER	SYMBOL	MIN	TYP	MAX	UNITS	NOTES
Supply Current	I_{CC}			400	µA	4
Input Leakage	I_{LI}	-1		+1	µA	
Wiper Resistance	R_W		400	1000	Ω	
Wiper Current	I_W			1	mA	
Standby Current: 3V 5V	I_{STBY}		10 20	48	µA µA	5
Wiper Load Time	t_{WLT}		500		µs	6
Power-Up Time	t_{PU}		50		ms	14

ANALOG RESISTOR CHARACTERISTICS

(V_{CC} = 2.7V to 5.5V, T_A = -40°C to +85°C, unless otherwise noted.)

PARAMETER	SYMBOL	MIN	TYP	MAX	UNITS	NOTES
End-to-End Resistor Tolerance		-20		+20	%	8
Absolute Linearity			±0.6		LSB	9
Relative Linearity			±0.25		LSB	10
-3dB Cutoff Frequency	f_{CUTOFF}				MHz	11
Temperature Coefficient			750		ppm/°C	

CAPACITANCE

(V_{CC} = 2.7V to 5.5V, T_A = +25°C, unless otherwise noted.)

PARAMETER	SYMBOL	MIN	TYP	MAX	UNITS	NOTES
Input Capacitance	C_{IN}			5	pF	12
Output Capacitance	C_{OUT}			7	pF	12

AC ELECTRICAL CHARACTERISTICS

(V_{CC} = 2.7V to 5.5V, T_A = -40°C to +85°C, unless otherwise noted.)

PARAMETER	SYMBOL	MIN	TYP	MAX	UNITS	NOTES
$\overline{CS}$ to $\overline{INC}$ Setup	t_{CI}	50			ns	13
U/$\overline{D}$ to $\overline{INC}$ Setup	t_{DI}	100			ns	13
$\overline{INC}$ Low Period	t_{IL}	50			ns	13
$\overline{INC}$ High Period	t_{IH}	100			ns	13
$\overline{INC}$ inactive to $\overline{CS}$ Inactive	t_{IC}	500			ns	13
$\overline{CS}$ Deselect Time	t_{CPH}	100			ns	13
Wiper Change to $\overline{INC}$ Low	t_{IW}			200	ns	13
$\overline{INC}$ Rise and Fall Times	t_R, t_F			500	µs	13
$\overline{INC}$ Low to $\overline{CS}$ Inactive	t_{IK}	50			ns	16
Wiper Storage Time	t_{WST}			10	ms	13, 17

NOTES:

1) All voltages are referenced to ground.

2) Valid for V_{CC} = 5V only.

3) Resistor input voltages cannot go below ground or exceed V_{CC} by the amounts as shown in the table.

4) Maximum current specifications are based on the clock rate of $\overline{INC}$ input. This specification represents the current required when changing the wiper position.

5) Standby current levels apply when all inputs are driven to appropriate supply levels. $\overline{CS}$, $\overline{INC}$, U/$\overline{D}$ = V_{CC}.

6) Wiper load time is specified as the time required for the DS1804 to load the wiper position with the contents of nonvolatile memory once V_{CC} has reached a stable operating voltage equal to or greater than 2.7V.

7) The DS1804 is available in three resistor values. These include the DS1804-010, 10kΩ; the DS1804-050, 50kΩ; and the DS1804-100, 100kΩ.

8) Valid at T_A = +25°C only.

9) Absolute linearity is used to compare measured wiper voltage versus expected wiper voltage as determined by wiper position. The DS1804 is specified to provide an absolute linearity of ±0.60 LSB.

10) Relative linearity is used to determined the change in voltage between successive tap positions. The DS1804 is specified to provide a relative linearity specification of ±0.25 LSB.

11) -3dB cutoff frequency characteristics for the DS1804 depend on potentiometer total resistance. DS1804-010, 1MHz; DS1804-050, 200kHz; and DS1804-100, 100kHz.

12) Capacitance values apply at T_A = +25°C.

13) See Figure 2.

14) Power-up time is specified as the time required before the three-terminal control becomes active after a stable power supply level has been reached.

15) At V_{CC} = 2.7V, V_{IL} = 0.8V.

16) The $\overline{INC}$ low to $\overline{CS}$ inactive is specified to be 50ns minimum. This is the transition condition which allows the DS1804 three-terminal port to become inactive without writing the EEPROM memory of the part.

17) Wiper Storage Time, t_{WST}, is the time require for the DS1804 to write EEPROM memory for storage of a new wiper position. The maximum time required to accomplish this task is specified at 10ms.

THREE-TERMINAL INTERFACE TIMING DIAGRAM Figure 2

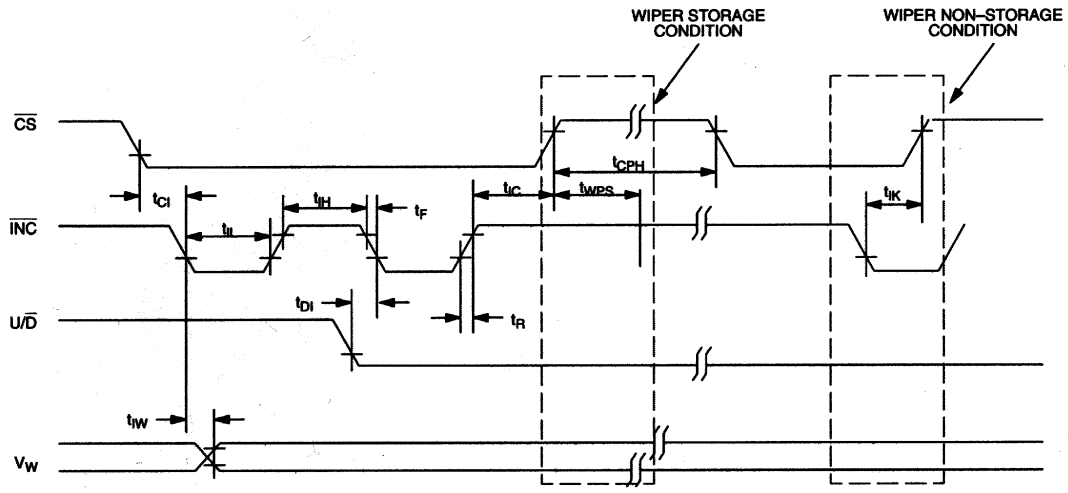

ORDERING INFORMATION

PART	VERSION (kΩ)	TEMP RANGE	PIN-PACKAGE
DS1804-010+	10	-40°C to +85°C	8 DIP (300 mils)
DS1804-050+	50	-40°C to +85°C	8 DIP (300 mils)
DS1804-100+	100	-40°C to +85°C	8 DIP (300 mils)
DS1804Z-010+	10	-40°C to +85°C	8 SO (150 mils)
DS1804Z-050+	50	-40°C to +85°C	8 SO (150 mils)
DS1804Z-100+	100	-40°C to +85°C	8 SO (150 mils)
DS1804U-010+	10	-40°C to +85°C	8 µSOP (118 mils)
DS1804U-050+	50	-40°C to +85°C	8 µSOP (118 mils)
DS1804U-100+	100	-40°C to +85°C	8 µSOP (118 mils)

+Denotes a lead(Pb)/RoHS-compliant package.

BRANDING INFORMATION Figure 3

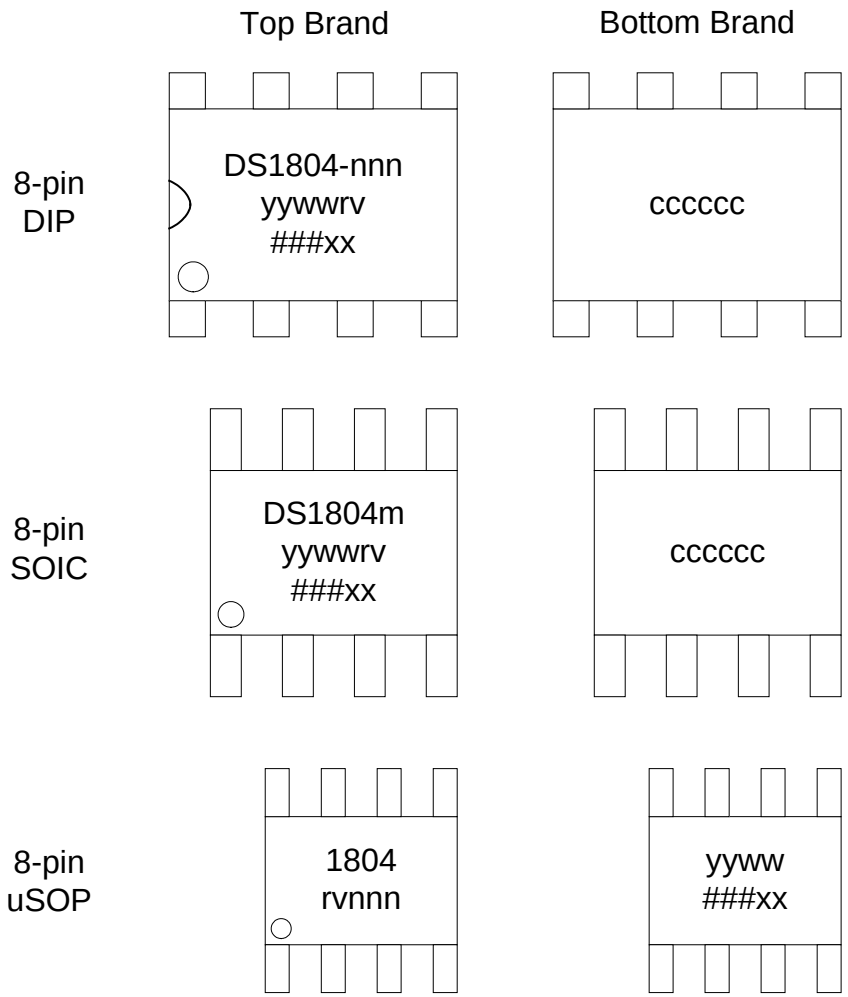

DS1804 Brand Codes		
Code	Description	Values
nnn	Pot Size (DIP/uSOP)	010 10k ohm 050 50k ohm 100 100k ohm
m	Pot Size (SOIC)	X 10k ohm L 50k ohm C 100k ohm
yyww	Date Code. It identifies the year and work week the device was assembled	eg. 0035 is the 35th work week of 2000
rv	Die Revision	Generally this is a letter followed by a number (eg. B2)
###xx	Lot Code	
cccccc	Country of Assembly	

PACKAGE INFORMATION

For the latest package outline information and land patterns (footprints), go to **www.maxim-ic.com/packages**. Note that a "+", "#", or "-" in the package code indicates RoHS status only. Package drawings may show a different suffix character, but the drawing pertains to the package regardless of RoHS status.

PACKAGE TYPE	PACKAGE CODE	OUTLINE NO.	LAND PATTERN NO.
8 DIP	P8+2	**21-0043**	—
8 SO	S8+2	**21-0041**	**90-0096**
8 μSOP	U8+3	**21-0036**	**90-0092**

REVISION HISTORY

REVISION DATE	DESCRIPTION	PAGES CHANGED
6/11	Removed the flip chip package option	1, 7
	Updated the soldering temperature information and added lead temperature information in the *Absolute Maximum Ratings* section	4
	Changed $V_{IH(MAX)}$ from V_{CC} + 0.5V to V_{CC} + 0.3V, changed $V_{IL(MIN)}$ from -0.5V to -0.3V, changed the resistor inputs min from GND - 0.5V to V_{GND} - 0.2V and max from V_{CC} + 0.5V to V_{CC} + 0.2V in the *Recommended DC Operating Conditions* table	4
	Updated the *Ordering Information* table to include lead-free options	7
	Added the *Package Information* table	9

Maxim cannot assume responsibility for use of any circuitry other than circuitry entirely embodied in a Maxim product. No circuit patent licenses are implied. Maxim reserves the right to change the circuitry and specifications without notice at any time.

Maxim Integrated Products, 120 San Gabriel Drive, Sunnyvale, CA 94086 408-737-7600

© 2011 Maxim Integrated Products Maxim is a registered trademark of Maxim Integrated Products, Inc.

OCEAN CHIPS
Океан Электроники
Поставка электронных компонентов

Компания «Океан Электроники» предлагает заключение долгосрочных отношений при поставках импортных электронных компонентов на взаимовыгодных условиях!

Наши преимущества:

- Поставка оригинальных импортных электронных компонентов напрямую с производств Америки, Европы и Азии, а так же с крупнейших складов мира;
- Широкая линейка поставок активных и пассивных импортных электронных компонентов (более 30 млн. наименований);
- Поставка сложных, дефицитных, либо снятых с производства позиций;
- Оперативные сроки поставки под заказ (от 5 рабочих дней);
- Экспресс доставка в любую точку России;
- Помощь Конструкторского Отдела и консультации квалифицированных инженеров;
- Техническая поддержка проекта, помощь в подборе аналогов, поставка прототипов;
- Поставка электронных компонентов под контролем ВП;
- Система менеджмента качества сертифицирована по Международному стандарту ISO 9001;
- При необходимости вся продукция военного и аэрокосмического назначения проходит испытания и сертификацию в лаборатории (по согласованию с заказчиком);
- Поставка специализированных компонентов военного и аэрокосмического уровня качества (Xilinx, Altera, Analog Devices, Intersil, Interpoint, Microsemi, Actel, Aeroflex, Peregrine, VPT, Syfer, Eurofarad, Texas Instruments, MS Kennedy, Miteq, Cobham, E2V, MA-COM, Hittite, Mini-Circuits, General Dynamics и др.);

Компания «Океан Электроники» является официальным дистрибьютором и эксклюзивным представителем в России одного из крупнейших производителей разъемов военного и аэрокосмического назначения **«JONHON»**, а так же официальным дистрибьютором и эксклюзивным представителем в России производителя высокотехнологичных и надежных решений для передачи СВЧ сигналов **«FORSTAR»**.

AVIC JONHON

«JONHON» (основан в 1970 г.)

Разъемы специального, военного и аэрокосмического назначения:

(Применяются в военной, авиационной, аэрокосмической, морской, железнодорожной, горно- и нефтедобывающей отраслях промышленности)

«FORSTAR» (основан в 1998 г.)

ВЧ соединители, коаксиальные кабели, кабельные сборки и микроволновые компоненты:

(Применяются в телекоммуникациях гражданского и специального назначения, в средствах связи, РЛС, а так же военной, авиационной и аэрокосмической отраслях промышленности).

FORSTAR®

Телефон: 8 (812) 309-75-97 (многоканальный)
Факс: 8 (812) 320-03-32
Электронная почта: ocean@oceanchips.ru
Web: http://oceanchips.ru/
Адрес: 198099, г. Санкт-Петербург, ул. Калинина, д. 2, корп. 4, лит. А