MSM LA 19

Metal Switch, Latching Action, Switching Voltage up to 125 VDC / 250 VAC

Point Illumination
green

Ring illumination
red

non-illuminated
grey

See below:
Approvals and Compliances

Description

- Switch available in version: Standard (ST), with Lettering (LE), with Point Illumination (PI), with Ring Illumination (RI)
- Available with 12 A and 16 A switching current Assembly by mounting with nut and subsequent clipping of the switching element
- Equipped with flat-pin plugs to permit fast connection

Characteristics

- Housing and actuator material: high-quality stainless steel
- Variety of design options regarding size, colour, illumination, connection or lettering
- Switching voltage up to 125 VDC respectively 250 VAC, switching current up to 16 A
- optional with point or ring illumination
- available with single-pole and double-pole switching system, switching status is easy to discern by looking at or feeling the resting position of the actuator
- For use in harsh environments (see technical data)

References

Alternative: double-pole switch: MSM DP 19; MSM DP 22; MSM DP 30
Alternative: switch with backlighted illumination: MSM CS 19; MSM CS 22; MSM LA CS 19; MSM LA CS 22
Alternative: Other diameter
Alternative: Standard version MSM LA 22; MSM 16

Weblinks

pdf data sheet, html datasheet, General Product Information, CAD-Drawings, Product News, Detailed request for product

Technical Data

Electrical Data	
Switching Function	latching
Number of Poles	SPST, DPST
Supply Voltage	24 VDC Ring Illumination , Point Illumination without series resistor , LED operating data are listed in a separate table
	5 VDC and 12 VDC RI variants on request (MOQ 500 pieces)
Impulse Withstand Voltage (ESD)	4 kV MSM ST / MSM LE
Switching Voltage	max. 250 VAC 30 VDC (125 VDC at 0.5 A),
Switching Current	12 A AC / 16 A AC
Rated Switching Capacity	3000 W
Lifetime	0.05 million actuations (250 VAC / 8 A), 0.1 million actuations (125 VDC / 0,5 A), 0.02 million actuations (250 VAC / 16 A)
Contact Resistance	< 100 mΩ (12 VDC / 1 A)
Insulation Resistance	> 100 MΩ 500 VDC
Mechanical Data	
Actuating Force	10 N
Actuating Travel	5.2 mm,
Lifetime	0.1 million actuations
Contact Gap	3 mm
Shock Protection	IK 07
Mounting screw torque Plastic Nut	max. 4.5 Nm
Mounting screw torque Stainless Steel Nut	max. 12 Nm

Climatical Data	
Operating Temperature	-20 to 85 °C
Storage Temperature	-20 to 85 °C
Protection Class	IP64
Switching Unit	IP40
Salt Spray Test (acc. to DIN 50021-SS)	24 h / 48 h / 96 h Residence Time
Material	
Housings	Stainless Steel
Actuator (disc, outside housing)	Stainless Steel
Illuminated Ring (die-casting, inside housing)	PC
Seal Ring	NBR70
Switcher Collet	PA66 (UL94-V0 related to d ≥ 1.6 mm)
Intermediate Connector	PA66 (UL94-V0 related to d ≥ 1.6 mm)
Contact Pin Adapter	PA66 (UL94-V0 related to d ≥ 1.6 mm)

Detailed information on product approvals, code requirements, usage instructions and detailed test conditions can be looked up in Details about Approvals

SCHURTER products are designed for use in industrial environments. They have approvals from independent testing bodies according to national and international standards. Products with specific characteristics and requirements such as required in the automotive sector according to IATF 16949, medical technology according to ISO 13485 or in the aerospace industry can be offered exclusively with customer-specific, individual agreements by SCHURTER.

Product standards

Product standards that are referenced

Organization	Design	Standard	Description
DIN	Designed according to	DIN EN 61058-1	Switches for appliances. Part 1. General requirements
UL	Designed according to	UL 1054	UL standard for safety special-use switches

Application standards

Application standards where the product can be used

Organization	Design	Standard	Description
IEC	Designed for applications acc.	IEC/UL 62368-1	IEC 62368-1 includes the basic requirements for safety of audio, video, information technology and office equipment.

Compliances

The product complies with following Guide Lines

Identification	Details	Initiator	Description
RoHS	RoHS	SCHURTER AG	Directive RoHS 2011/65/EU, Amendment (EU) 2015/863
REACH	REACH	SCHURTER AG	On 1 June 2007, Regulation (EC) No 1907/2006 on the Registration, Evaluation, Authorization and Restriction of Chemicals 1 (abbreviated as "REACH") entered into force.

Dimension [mm]

MSM 19 LA ST / LE double-pole

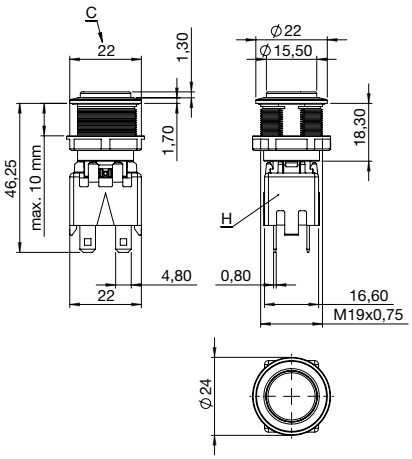

MSM 19 LA PI double-pole

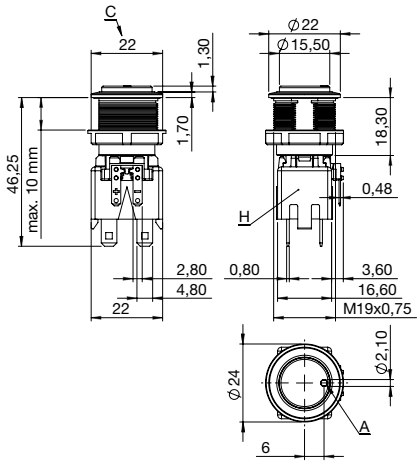

MSM 19 LA RI double-pole

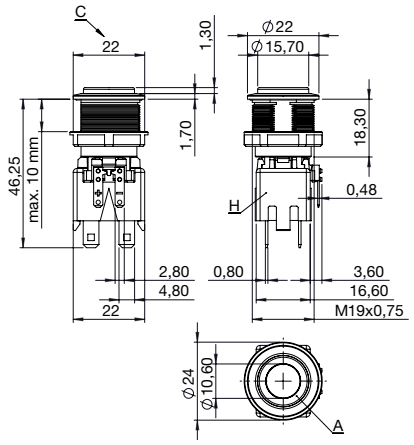

Switching Element single-pole with Push Button Holder

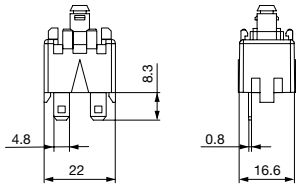

Legend
A = Illumination Area
C = Width Across Flats
D = Nut
H = Switching Element

Dimension

MSM 19 LA ST / MSM 19 LA RI

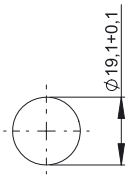

Drilling diagram

MSM 19 LA LE / MSM 19 LA PI / MSM 19 LA RI optional

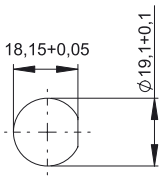

Drilling diagram

Assembly Instructions

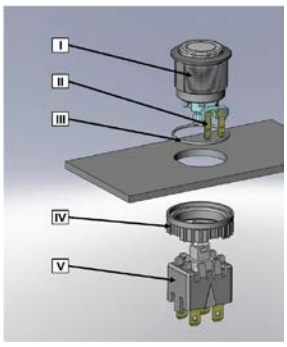

I Housing
II Flat Pin Terminal (Illumination)
III Gasket
IV Nut (Nut type see Dimensions)
V Module Switching Contact

Installation Instruction:
1.) Place the gasket accurately on the actuator housing. Then mount the actuator housing assembly into the panel.
2.) Tighten the screw nut according to the torque instructions.
3.) Clasp the module switching contact into the actuator housing.
Installation information:
1.) The power supply and the configuration of the flat pin terminals have to be installed correctly for the illumination and micro switch function.
2.) Insulate the terminals as required. Fully insulated plug-in sleeves are recommended.
3.) Installation instructions according to VDE-standard DIN VDE 0100-100 or alternatively IEC 60354 standard

Diagrams

MSM LA ST / LE single-pole

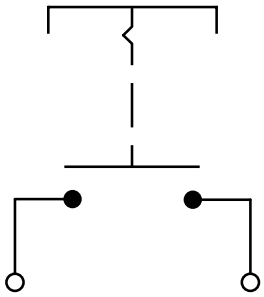

MSM LA ST / LE double-pole

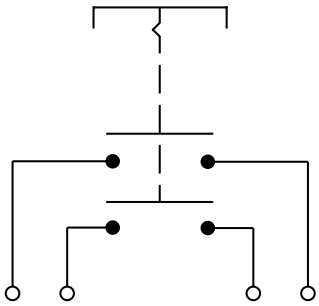

MSM LA PI single-pole

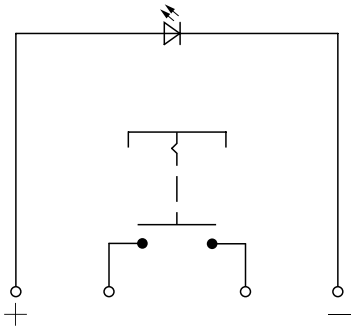

MSM LA PI double-pole

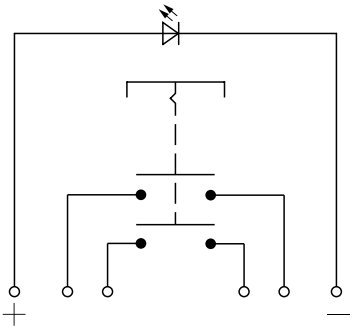

MSM LA RI single-pole

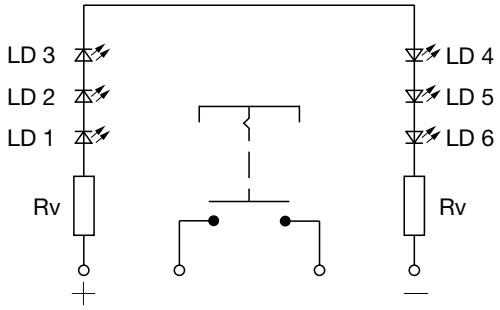

MSM LA RI double-pole

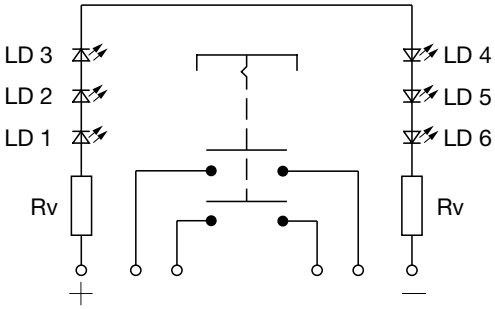

Contact Layout single-pole

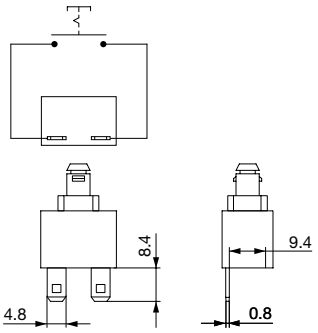

Contact Layout double-pole

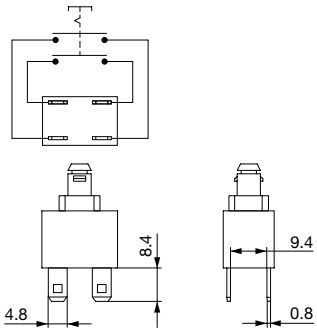

Point Illumination

Operating Data	Forward Current max.	Forward Voltage at 10 mA	Forward Voltage max.
LED red	30 mA	1.9 VDC	3.0 VDC
LED green	30 mA	2.4 VDC	3.0 VDC
LED yellow	30 mA	2.4 VDC	3.0 VDC
LED blue	20 mA	3.8 VDC	4.5 VDC
LED red/green	25 mA	2.0 VDC	2.5 VDC
Attention: Switches are delivered without series resistor.			

Lettering

The last three digits in the order number define the lettering:	
000	No Lettering
001-074	Standard Lettering
101-	Customized Lettering

Lettering Colour of Laser Lettering

Material	Lettering Colour	
Stainless Steel	black	Filled letters

Order Index Lettering

Laser Marking			
001 =**A**	021 =**U**	041 =**÷**	061 =**EIN**
002 =**B**	022 =**V**	042 = ✳	062 =**AUS**
003 =**C**	023 =**W**	043 =**=**	063 =**AUF**
004 =**D**	024 =**X**	044 = #	064 =**AB**
005 =**E**	025 =**Y**	045 = ↔	065 =**ON**
006 =**F**	026 =**Z**	046 = ↕	066 =**OFF**
007 =**G**	027 =**0**	047 = →	067 =**UP**
008 =**H**	028 =**1**	048 = ←	068 =**DOWN**
009 =**I**	029 =**2**	049 = ↓	069 =**HIGH**
010 =**J**	030 =**3**	050 = ↑	070 =**LOW**
011 =**K**	031 =**4**	051 = %	071 =**ON/OFF**
012 =**L**	032 =**5**	052 = √	072 =**START**
013 =**M**	033 =**6**	053 =**CTRL**	073 =**RESET**
014 =**N**	034 =**7**	054 =**RETURN**	074 = ⏻
015 =**O**	035 =**8**	055 =**SHIFT**	075 =
016 =**P**	036 =**9**	056 =**LOCK**	076 =
017 =**Q**	037 =**+**	057 =**STOP**	077 =
018 =**R**	038 =**-**	058 =**ENTER**	
019 =**S**	039 =**.**	059 =**BACK**	
020 =**T**	040 = x	060 =**LINE**	

All Variants

Diameter [mm]	Number of Poles	Switching Current [A]	Illumination, LED	Torsion Protection Housing/Actuator	Config. Code	Order Number
19	DPST	12	non-illuminated	yes / yes	MSM 19 LA Pcs	1241.6821.1120000
19	DPST	12	Point Illumination, red	yes / yes	MSM 19 LA PI red	1241.6823.1121000
19	DPST	12	Point Illumination, green	yes / yes	MSM 19 LA PI green	1241.6823.1122000
19	DPST	12	Point Illumination, blue	yes / yes	MSM 19 LA PI blue	1241.6823.1124000
19	DPST	12	RI dotted, red, 24 VDC	yes / yes	MSM 19 LA RI red	1241.6824.1121000

Diameter [mm]	Number of Poles	Switching Current [A]	Illumination, LED	Torsion Protection Housing/Actuator	Config. Code	Order Number
19	DPST	12	RI dotted, green, 24 VDC	yes / yes	MSM 19 LA RI green	1241.6824.1122000
19	DPST	12	RI dotted, blue, 24 VDC	yes / yes	MSM 19 LA RI blue	1241.6824.1124000
19	SPST	12	non-illuminated	yes / yes	MSM 19 LA Pcs	1241.6821.1110000
19	SPST	12	Point Illumination, red	yes / yes	MSM 19 LA PI red	1241.6823.1111000
19	SPST	12	Point Illumination, green	yes / yes	MSM 19 LA PI green	1241.6823.1112000
19	SPST	12	Point Illumination, blue	yes / yes	MSM 19 LA PI blue	1241.6823.1114000
19	SPST	12	RI dotted, red, 24 VDC	yes / yes	MSM 19 LA RI red	1241.6824.1111000
19	SPST	12	RI dotted, green, 24 VDC	yes / yes	MSM 19 LA RI green	1241.6824.1112000
19	SPST	12	RI dotted, blue, 24 VDC	yes / yes	MSM 19 LA RI blue	1241.6824.1114000
19	SPST	12	RI dotted, white, 24 VDC	yes / yes	MSM 19 LA RI white	1241.6824.1115000
19	DPST	16	non-illuminated	yes / yes	MSM 19 LA Pcs	3-100-989
19	DPST	16	RI dotted, blue, 24 VDC	yes / yes	MSM 19 LA RI blue	3-100-999
19	DPST	16	RI dotted, red, 24 VDC	yes / yes	MSM 19 LA RI red	3-101-003
19	DPST	16	RI dotted, green, 24 VDC	yes / yes	MSM 19 LA RI green	3-101-004
19	SPST	16	non-illuminated	yes / yes	MSM 19 LA Pcs	3-100-987
19	SPST	16	RI dotted, red, 24 VDC	yes / yes	MSM 19 LA RI red	3-100-990
19	SPST	16	RI dotted, green, 24 VDC	yes / yes	MSM 19 LA RI green	3-100-991
19	SPST	16	RI dotted, blue, 24 VDC	yes / yes	MSM 19 LA RI blue	3-101-002

Legend:
Type:
MSMCS = Ceramic Surface
ST = Standard: not lettered
LE = Lettering: lettered
AI = BL = Full Surface Backlighting: Lettering possible (see Lettering, last 3 digits)

Customer-specific versions available on request.
Special materials for use in salt and chlorinated environment on request.

The MOQ for standard laser lettering on standard variants is a packing unit.

5 VDC and 12 VDC RI variants on request (MOQ 500 pieces)

The nut with gasket and micro switch are enclosed in the box.

Most Popular.

Availability for all products can be searched real-time:https://www.schurter.com/en/Stock-Check/Stock-Check-SCHURTER

Packaging unit 10 in box with insert

- Actuating elements in ESD safe packaging
- Screw nuts and sealing rings in a bag (enclosd in the box)
- Micro switches (enclosed in the box)

Accessories

	Description
	Power Supply Power Supply IP42 for LED- and Illumination applications indoor 90~264 VAC => 24 VDC 0.34 A 8 W

26.06.2020

The specifications, descriptions and illustrations indicated in this document are based on current information. All content is subject to modifications and amendments. Information furnished is believed to be accurate and reliable. However, users should independently evaluate the suitability and test each product selected for their own applications.

OCEAN CHIPS
Океан Электроники
Поставка электронных компонентов

Компания «Океан Электроники» предлагает заключение долгосрочных отношений при поставках импортных электронных компонентов на взаимовыгодных условиях!

Наши преимущества:

- Поставка оригинальных импортных электронных компонентов напрямую с производств Америки, Европы и Азии, а так же с крупнейших складов мира;
- Широкая линейка поставок активных и пассивных импортных электронных компонентов (более 30 млн. наименований);
- Поставка сложных, дефицитных, либо снятых с производства позиций;
- Оперативные сроки поставки под заказ (от 5 рабочих дней);
- Экспресс доставка в любую точку России;
- Помощь Конструкторского Отдела и консультации квалифицированных инженеров;
- Техническая поддержка проекта, помощь в подборе аналогов, поставка прототипов;
- Поставка электронных компонентов под контролем ВП;
- Система менеджмента качества сертифицирована по Международному стандарту ISO 9001;
- При необходимости вся продукция военного и аэрокосмического назначения проходит испытания и сертификацию в лаборатории (по согласованию с заказчиком);
- Поставка специализированных компонентов военного и аэрокосмического уровня качества (Xilinx, Altera, Analog Devices, Intersil, Interpoint, Microsemi, Actel, Aeroflex, Peregrine, VPT, Syfer, Eurofarad, Texas Instruments, MS Kennedy, Miteq, Cobham, E2V, MA-COM, Hittite, Mini-Circuits, General Dynamics и др.);

Компания «Океан Электроники» является официальным дистрибьютором и эксклюзивным представителем в России одного из крупнейших производителей разъемов военного и аэрокосмического назначения **«JONHON»**, а так же официальным дистрибьютором и эксклюзивным представителем в России производителя высокотехнологичных и надежных решений для передачи СВЧ сигналов **«FORSTAR»**.

AVIC JONHON

«JONHON» (основан в 1970 г.)

Разъемы специального, военного и аэрокосмического назначения:

(Применяются в военной, авиационной, аэрокосмической, морской, железнодорожной, горно- и нефтедобывающей отраслях промышленности)

«FORSTAR» (основан в 1998 г.)

ВЧ соединители, коаксиальные кабели, кабельные сборки и микроволновые компоненты:

(Применяются в телекоммуникациях гражданского и специального назначения, в средствах связи, РЛС, а так же военной, авиационной и аэрокосмической отраслях промышленности).

FORSTAR®

Телефон: 8 (812) 309-75-97 (многоканальный)
Факс: 8 (812) 320-03-32
Электронная почта: ocean@oceanchips.ru
Web: http://oceanchips.ru/
Адрес: 198099, г. Санкт-Петербург, ул. Калинина, д. 2, корп. 4, лит. А