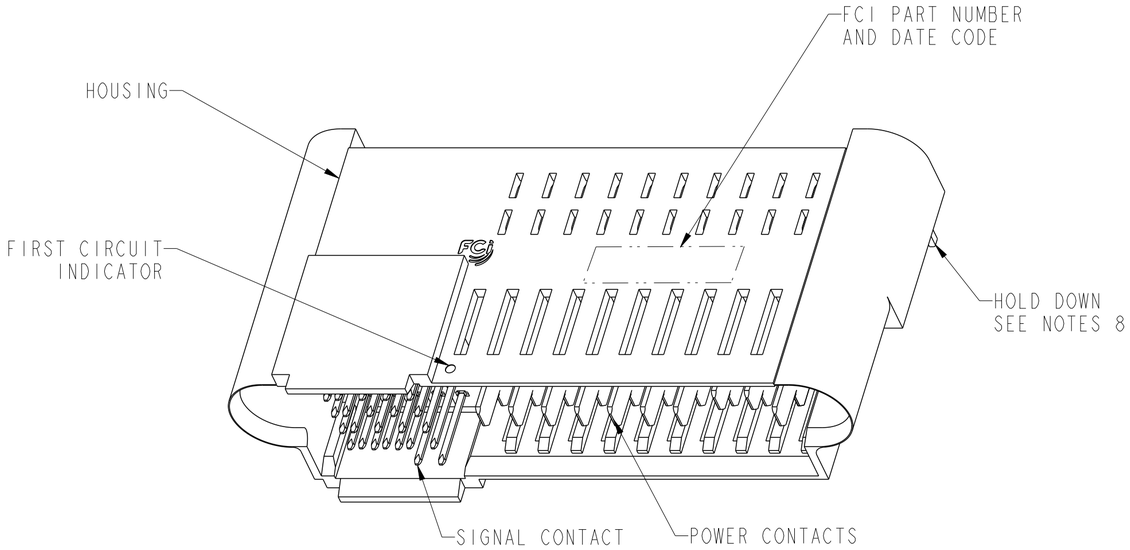

25Sx10P CONFIGURATION SHOWN
HOLD DOWN TYPE

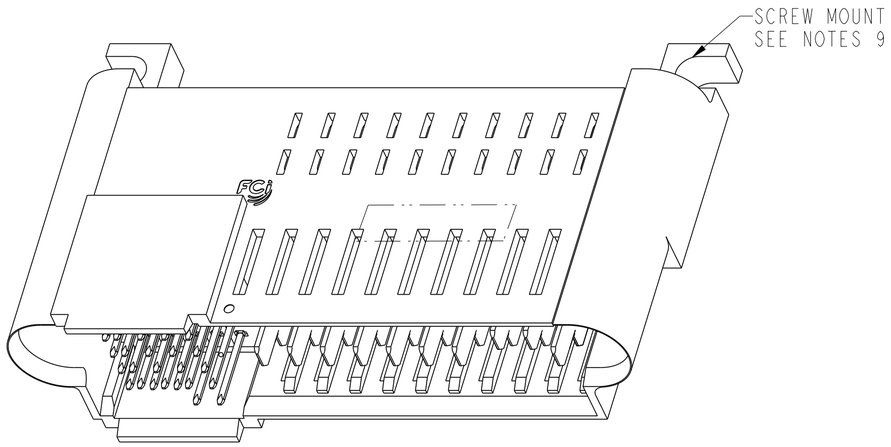

25Sx10P CONFIGURATION SHOWN
SCREW MOUNT TYPE

NOTES:

1. HOUSING MATERIAL:GF LCP,COLOR: BLACK, UL 94 V-0 RATED
   SIGNAL CONTACT MATERIAL: PHOSPHOR BRONZE
   SIGNAL PIN OVERMOLD MATERIAL: GF POLYESTER
   POWER CONTACT MATERIAL: COPPER ALLOY

2. PLATING ON SIGNAL CONTACTS: 1.27μm MIN Ni UNDERPLATING ALL OVER WITH 0.76μm MIN GXT IN CONTACT MATING AREA, AND 0.5μm MIN MATTE TIN ON TAIL AREA.

   PLATING ON POWER CONTACTS: 1.27μm MIN Ni UNDERPLATING ALL OVER WITH 0.76μm MIN GXT IN CONTACT MATING AREA, AND 0.5μm MIN MATTE TIN ON TAIL AREA.

   PLATING ON HOLD DOWN IF APPLICABLE: 1.27um MIN Ni, UNDERPLATING ALL OVER WITH 0.76um MIN MATTE TIN OVER.

3. LUBRICATION: LUBRICATE ON CONTACT AREA.

4. RECOMMENDED PCB THICKNESS IS:
   FOR PRESS FIT APPLICATION: 1.4mm MIN
   FOR SOLDER APPLICATION: 1.40mm THROUGH 2.62mm.

5. FOR SCREW MOUNT APPLICATIONS, A #4-40 UNC PAN SCREW WITH HEX NUT IS RECOMMENDED (SUPPLIED BY CUSTOMER).

6. FOR PRESS FIT ∅0.61±0.05mm, FOR SOLDER ∅0.90±0.05mm.

7. UNPLATED HOLES.

8. HOLD DOWN APPLICATION NEEDED.

9. SCREW MOUNT APPLICATION NEEDED.

10. PRODUCT SPECIFICATION: GS-12-1064
    APPLICATION SPECIFICATION: GS-20-0362

spec ref	SEE NOTE 10			dr	Zhang Hong-Tu	2012/08/13	projection	MM	size A2 / scale 1:1
tolerance std ISO 406 ISO 1101	TOLERANCES UNLESS OTHERWISE SPECIFIED			eng	De-Ming Lu	2017/05/09			ecn no ELX-DG-18076-1
				chr	Fancy Zhang	2017/05/23			
				appr	Pei-Ming Zheng	2017/05/26	product family	PwrLoPro	rel level Released
surface -	linear	0.X	±0.30	Amphenol FCi	title	PWR LoPro HEADER ASSEMBLY	dwg no	10122460	rev H
		0.XX	±0.20						
		0.XXX	±0.10			RA, PASSIVE GUIDE,S+P			
ISO 1302	angular	0°	±2°		cat. no.	-	Product - Customer Drw		sheet 1 of 10

© 2016 AFCI

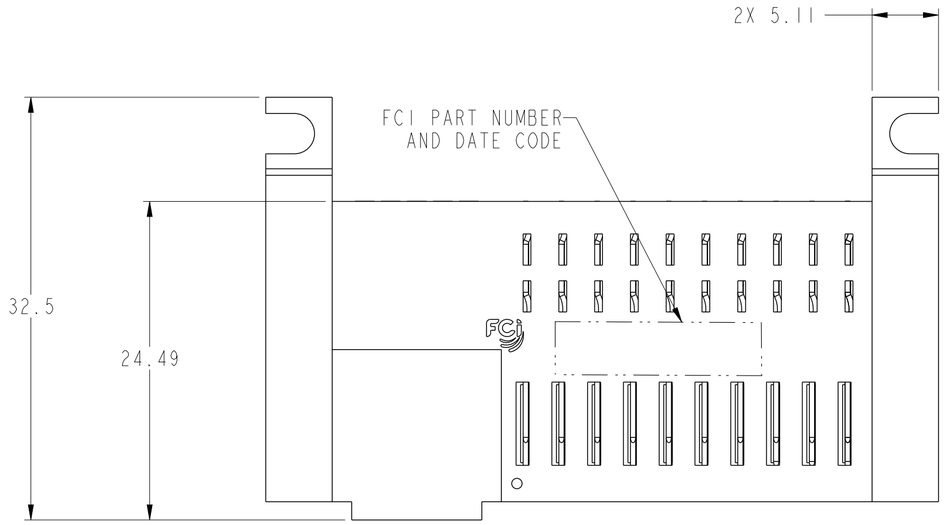

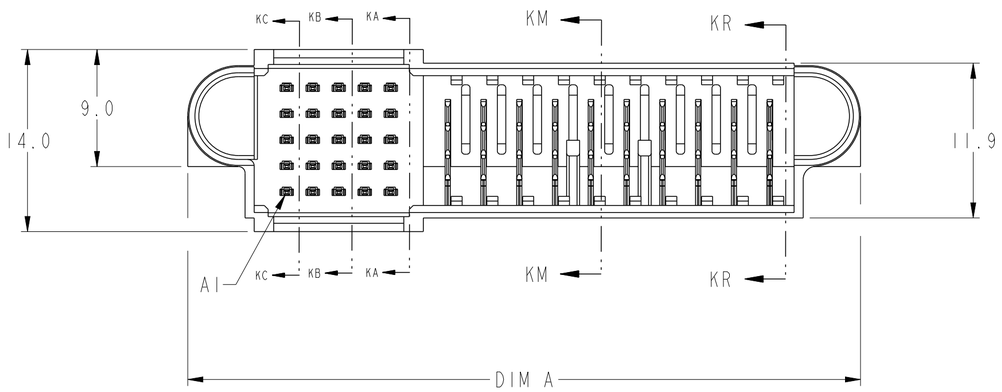

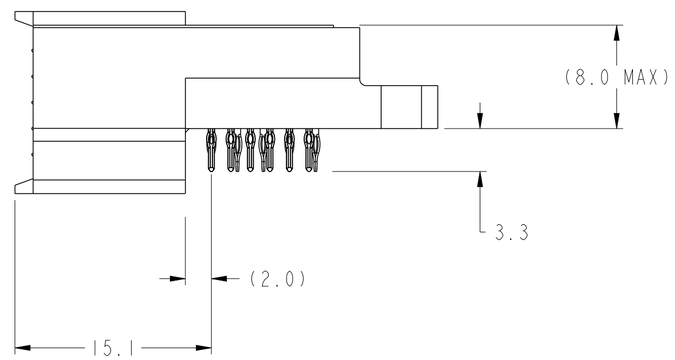

SCREW MOUNT TYPE AS SHOWN

spec ref	SEE NOTE 10			dr	Zhang Hong-Tu	2012/08/13	projection	MM	size A2	scale 3:1
tolerance std ISO 406 ISO 1101	TOLERANCES UNLESS OTHERWISE SPECIFIED			eng	De-Ming Lu	2017/05/09			ecn no	ELX-DG-18076-1
				chr	Fancy Zhang	2017/05/23				
				appr	Pei-Ming Zheng	2017/05/26	product family	PwrLoPro	rel level	Released
surface - ISO 1302	linear	0.X	±0.30	Amphenol FCi	title	PWR LoPro HEADER ASSEMBLY	dwg no	10122460	rev
		0.XX	±0.20			RA, PASSIVE GUIDE,S+P			H
		0.XXX	±0.10						
	angular	0°	±2°		cat. no.	-	Product - Customer Drw		sheet 2 of 10

© 2016 AFCI

Creo File - REV E - 2016-02-12

PDS: Rev :H STATUS:Released Printed: May 26, 2017

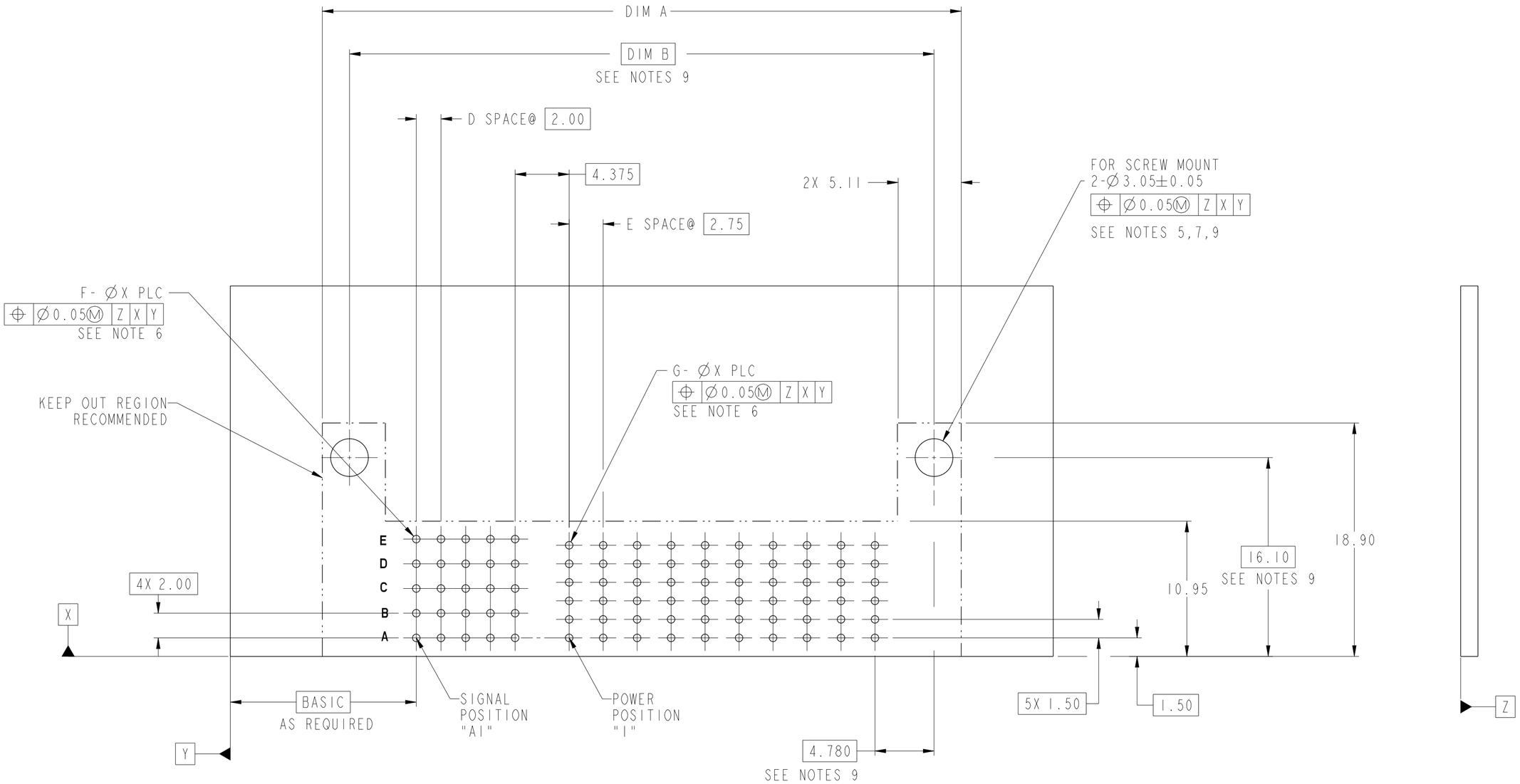

10122460-002LF AS SHOWN
RECOMMENDED PRINTED CIRCUIT BOARD LAYOUT SEE NOTE 4
FOR 10122460-XXXLF SCREW MOUNT TYPE
(AS VIEWED FROM COMPONENT SIDE)

spec ref	SEE NOTE 10			dr	Zhang Hong-Tu	2012/08/13	projection	MM
tolerance std ISO 406 ISO 1101	TOLERANCES UNLESS OTHERWISE SPECIFIED			eng	De-Ming Lu	2017/05/09		
				chr	Fancy Zhang	2017/05/23		
				appr	Pei-Ming Zheng	2017/05/26	product family	PwrLoPro
surface - ISO 1302	linear	0.X	±0.30	Amphenol FCi	title	PWR LoPro HEADER ASSEMBLY RA, PASSIVE GUIDE,S+P	dwg no	10122460
		0.XX	±0.20					
		0.XXX	±0.10					
	angular	0°	±2°		cat. no.	-	Product - Customer Drw	

size	scale	rev
A2	3:1	H
ecn no	ELX-DG-18076-1	
rel level	Released	
sheet 3 of 10		

© 2016 AFCI

Creo File - REV E - 2016-02-12

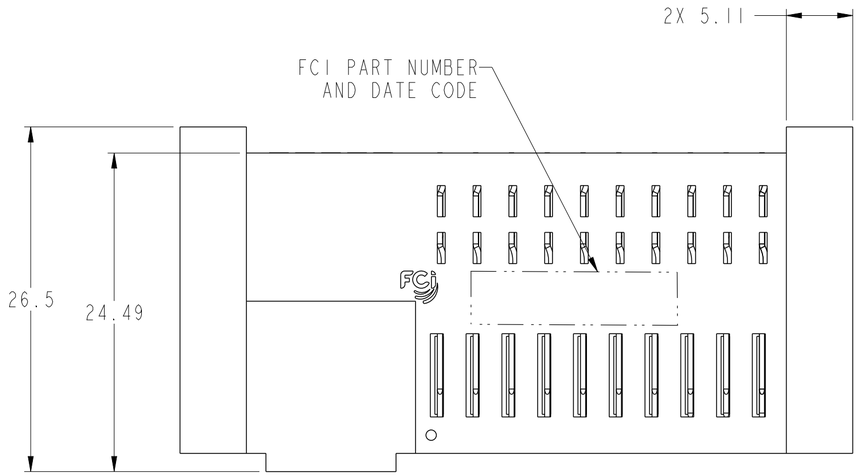

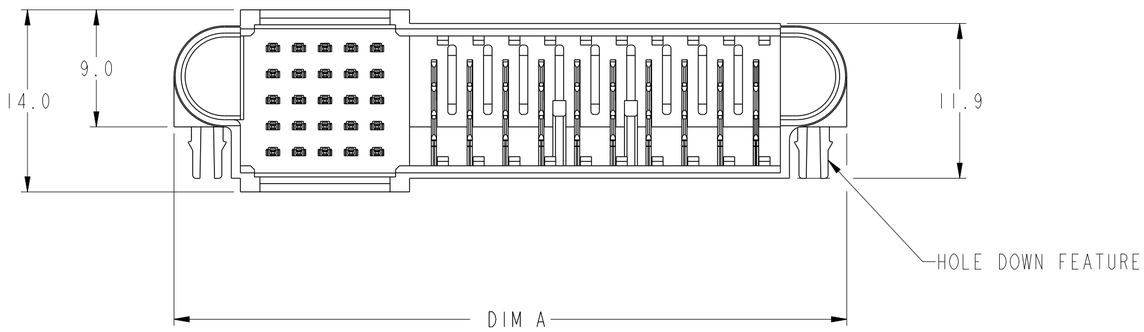

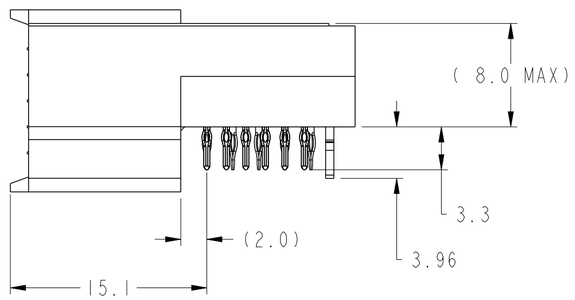

HOLE DOWN TYPE AS SHOWN

spec ref	SEE NOTE 10			dr	Zhang Hong-Tu	2012/08/13	projection	MM	size A2 / scale 3:1
tolerance std: ISO 406, ISO 1101	TOLERANCES UNLESS OTHERWISE SPECIFIED			eng	De-Ming Lu	2017/05/09			ecn no: ELX-DG-18076-1
				chr	Fancy Zhang	2017/05/23			
				appr	Pei-Ming Zheng	2017/05/26	product family	PwrLoPro	rel level: Released
surface - ISO 1302	linear	0.X	±0.30	Amphenol FCi	title: PWR LoPro HEADER ASSEMBLY, RA, PASSIVE GUIDE, S+P		dwg no	10122460	rev H
		0.XX	±0.20						
		0.XXX	±0.10						
	angular	0°	±2°		cat. no. -		Product - Customer Drw		sheet 4 of 10

© 2016 AFCI

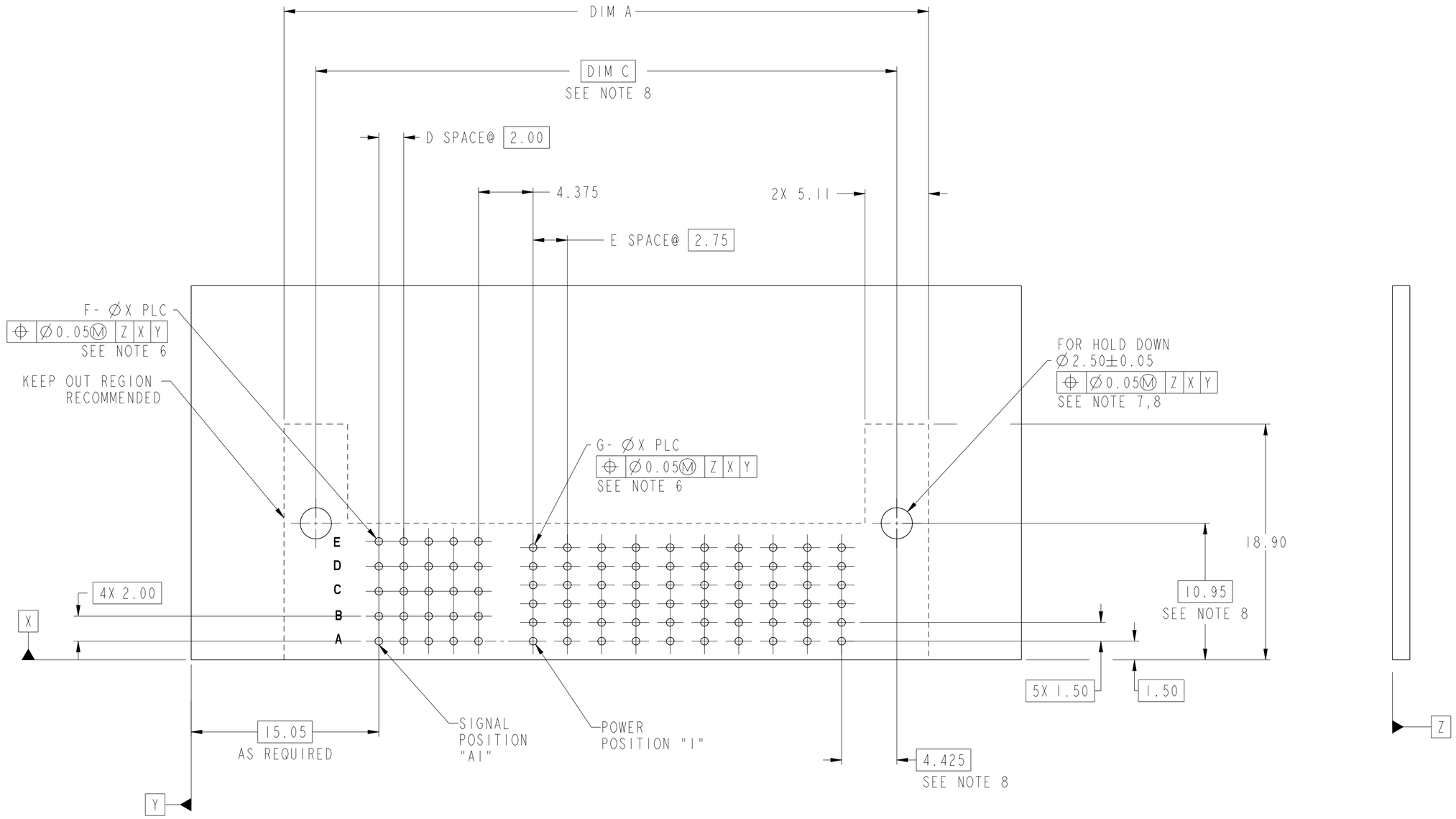

10122460-003LF AS SHOWN
RECOMMENDED PRINTED CIRCUIT BOARD LAYOUT SEE NOTE 4
FOR 10122460-XXXLF HOLD DOWN TYPE
(AS VIEWED FROM COMPONENT SIDE)

spec ref	SEE NOTE 10			dr	Zhang Hong-Tu	2012/08/13	projection	MM	size A2 / scale 4:1
tolerance std ISO 406 ISO 1101	TOLERANCES UNLESS OTHERWISE SPECIFIED			eng	De-Ming Lu	2017/05/09			
				chr	Fancy Zhang	2017/05/23			ecn no ELX-DG-18076-1
				appr	Pei-Ming Zheng	2017/05/26	product family	PwrLoPro	rel level Released
surface ISO 1302	linear	0.X	±0.30	Amphenol FCi	title	PWR LoPro HEADER ASSEMBLY	dwg no	10122460	rev H
		0.XX	±0.20			RA, PASSIVE GUIDE,S+P			
		0.XXX	±0.10						
	angular	0°	±2°		cat. no.	-	Product - Customer Drw		sheet 5 of 10

© 2016 AFCI

Creo File - REV E - 2016-02-12

PART NUMBER	CONFIGURATION	DIM "A"	DIM "B" FOR SCREW MOUNT	DIM "C" FOR HOLD DOWN	"D" SPACES	"E" SPACES	"F" QTY.	"G" QTY.	MOUNTING FEATURE
10122460-001LF	35S+18P	77.71	-	72.60	6	17	35	108	HOLD DOWN
10122460-003LF	25S+10P	51.71	-	46.6	4	9	25	60	HOLD DOWN
10122460-004LF	25S+8P	46.21	-	41.1	4	7	25	48	HOLD DOWN
10122460-005LF	25S+10P	51.71	-	46.6	4	9	25	60	HOLD DOWN
10122460-006LF	25S+8P	46.21	-	41.1	4	7	25	48	HOLD DOWN
10122460-007LF	25S+10P	51.71	47.31	-	4	9	25	60	SCREW MOUNT
10122460-008LF	15S+2P	25.71	-	15.1	2	1	15	12	HOLD DOWN
10122460-009LF	25S+10P	51.71	-	46.6	4	9	25	60	HOLD DOWN
10122460-010LF	35S+20P	83.21	-	78.1	6	19	35	120	HOLD DOWN
10122460-011LF	25S+02P	29.71	-	24.6	4	1	25	12	HOLD DOWN
10122460-013LF	25S+10P	51.71	47.31	-	4	9	25	60	SCREW MOUNT

Amphenol FCi

© 2016 AFCI

spec ref	SEE NOTE 10		
tolerance std	ISO 406 ISO 1101	TOLERANCES UNLESS OTHERWISE SPECIFIED	
surface	ISO 1302	linear	0.X ±0.30
			0.XX ±0.20
			0.XXX ±0.10
		angular	0° ±2°

dr	Zhang Hong-Tu	2012/08/13
eng	De-Ming Lu	2017/05/09
chr	Fancy Zhang	2017/05/23
appr	Pei-Ming Zheng	2017/05/26

projection | MM | size A2 | scale 3:1

ecn no ELX-DG-18076-1

product family PwrLoPro | rel level **Released**

Amphenol FCi

title: PWR LoPro HEADER ASSEMBLY
RA, PASSIVE GUIDE,S+P

dwg no 10122460 | rev **H**

cat. no. - | Product - Customer Drw | sheet 6 of 10

Creo File - REV E - 2016-02-12

CUSTOMER LOADING WORKSHEET FOR SIGNAL & POWER SEQUENCING LEVELS

PWR LO PRO - MATING FACE OF HEADER CONNECTOR(4)

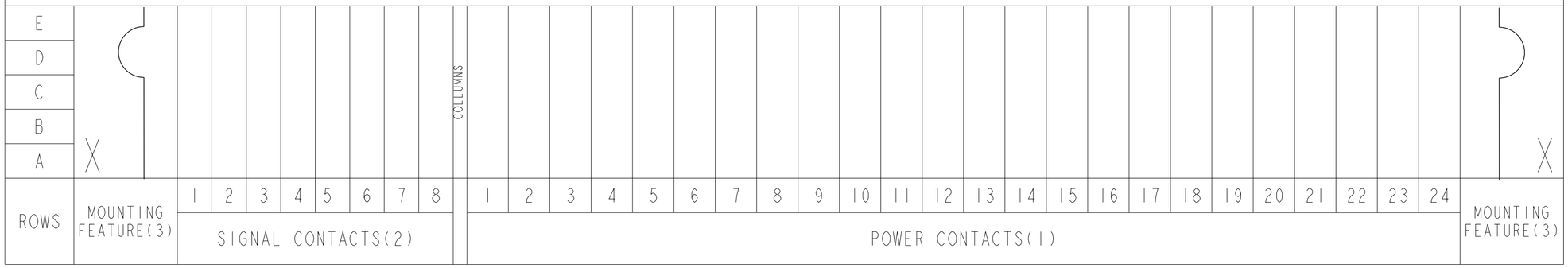

1). LOAD WITH CHOICE OF 2 POWER CONTACT MATING LEVELS, SEE SECTIONS KM & KR FOR AVAILABLE LEVEL OPTIONS.

2). LOAD WITH CHOICE OF 3 SIGNAL CONTACT MATING LEVELS, SEE SECTIONS KA,KB,&KC FOR AVAILABLE LEVEL OPTIONS.

3). MOUNTING FEATURE OPTION "X"
- H : HOLD DOWN TYPE
- S : SCREW MOUNT TYPE

4). CUSTOMER LOADING WORKSHEET SHOWN AT MAXMUM SIZE CONFIGURATION (40Sx24P), SIGNALS AVAILABLE IN 2,3,4 THRU 8 POSITIONS, POWERS AVAILABLE IN 4,6,8 THRU 24 POSITIONS IN EVEN QUANTITIES ONLY.

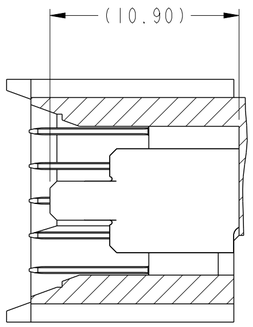

POWER
SECTION KM-KM
LEVEL 1:
LONGEST MATING
CONTACTS

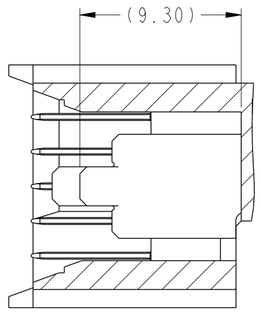

POWER
SECTION KR-KR
LEVEL 2:
SHORTEST MATING
CONTACTS

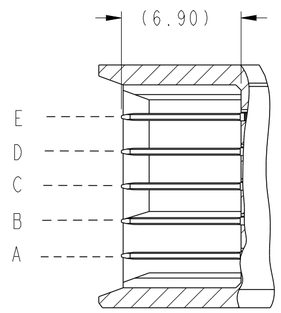

SIGNAL
SECTION KA-KA
LEVEL 2:
ALL LONGEST
CONTACTS

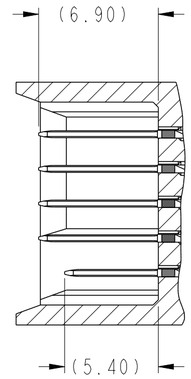

SIGNAL
SECTION KB-KB
LEVEL 32222 (MIXED):
ROW "A",SHORTEST CONTACT
ROW "B" THRU "E",LONGEST CONTACTS

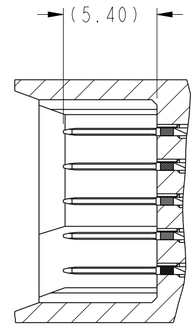

SIGNAL
SECTION KC-KC
LEVEL 3:
ALL SHORTEST
CONTACTS

spec ref	SEE NOTE 10			dr	Zhang Hong-Tu	2012/08/13	projection	MM	size A2	scale 1:1
tolerance std ISO 406 ISO 1101	TOLERANCES UNLESS OTHERWISE SPECIFIED			eng	De-Ming Lu	2017/05/09			ecn no	ELX-DG-18076-1
				chr	Fancy Zhang	2017/05/23				
				appr	Pei-Ming Zheng	2017/05/26	product family	PwrLoPro	rel level	Released
surface - ISO 1302	linear	0.X	±0.30	Amphenol FCi	title	PWR LoPro HEADER ASSEMBLY	dwg no	10122460	rev H
		0.XX	±0.20			RA, PASSIVE GUIDE,S+P			
		0.XXX	±0.10						
	angular	0°	±2°		cat. no.	-	Product - Customer Drw		sheet 7 of 10

© 2016 AFCI

PART NUMBER	ROWS	SIGNALS 1	2	3	4	5	6	7	POWERS 1	2	3	4	5	6	7	8	9	10	11	12	13	14	15	16	17	18
10122460-001LF 35S + 18P	E	3	3	3	3	3	3	3	2	2	2	—	—	—	—	—	—	—	2	2	2	2	2	2	2	2
	D																									
	C																									
	B																									
	A																									

PART NUMBER	ROWS	SIGNALS 1	2	3	4	5	POWERS 1	2	3	4	5	6	7	8	9	10
10122460-003LF 25S + 10P	E	2	2	32222	2	2	2	2	2	2	2	2	2	2	2	2
	D															
	C															
	B															
	A															

PART NUMBER	ROWS	SIGNALS 1	2	3	4	5	POWERS 1	2	3	4	5	6	7	8
10122460-004LF 25S + 8P	E	2	2	32222	2	2	—	—	—	—	2	2	2	2
	D													
	C													
	B													
	A													

PART NUMBER	ROWS	SIGNALS 1	2	3	4	5	POWERS 1	2	3	4	5	6	7	8	9	10
10122460-005LF 25S + 10P	E	2	2	2	2	3	2	2	2	2	2	2	2	2	2	2
	D															
	C															
	B															
	A															

VIEWED FROM MATING FACE:

spec ref	SEE NOTE 10	dr	Zhang Hong-Tu	2012/08/13	projection	MM	size A2 / scale 1:1
tolerance std ISO 406 ISO 1101	TOLERANCES UNLESS OTHERWISE SPECIFIED	eng	De-Ming Lu	2017/05/09			ecn no ELX-DG-18076-1
		chr	Fancy Zhang	2017/05/23			
		appr	Pei-Ming Zheng	2017/05/26	product family	PwrLoPro	rel level Released
surface -	linear 0.X ±0.30 / 0.XX ±0.20 / 0.XXX ±0.10	Amphenol FCi	title	PWR LoPro HEADER ASSEMBLY RA, PASSIVE GUIDE,S+P	dwg no	10122460	rev H
ISO 1302	angular 0° ±2°			cat. no. -	Product - Customer Drw		sheet 8 of 10

© 2016 AFCI

PART NUMBER	ROWS	SIGNALS 1	SIGNALS 2	SIGNALS 3	SIGNALS 4	SIGNALS 5	POWERS 1	POWERS 2	POWERS 3	POWERS 4	POWERS 5	POWERS 6	POWERS 7	POWERS 8
10122460-006LF 25S + 8P	E	2	2	32222	2	2	—	—	2	2	2	2	2	—
	D													
	C													
	B													
	A													

PART NUMBER	ROWS	SIGNALS 1	SIGNALS 2	SIGNALS 3	SIGNALS 4	SIGNALS 5	POWERS 1	POWERS 2	POWERS 3	POWERS 4	POWERS 5	POWERS 6	POWERS 7	POWERS 8	POWERS 9	POWERS 10
10122460-007LF 25S + 10P	E	2	2	2	2	3	2	2	2	2	2	2	2	2	2	2
	D															
	C															
	B															
	A															

PART NUMBER	ROWS	SIGNALS 1	SIGNALS 2	SIGNALS 3	POWERS 1	POWERS 2
10122460-008LF 15S + 2P	E	32222	2	2	—	2
	D					
	C					
	B					
	A					

PART NUMBER	ROWS	SIGNALS 1	SIGNALS 2	SIGNALS 3	SIGNALS 4	SIGNALS 5	POWERS 1	POWERS 2	POWERS 3	POWERS 4	POWERS 5	POWERS 6	POWERS 7	POWERS 8	POWERS 9	POWERS 10
10122460-009LF 25S + 10P	E	2	2	3	2	2	2	2	2	2	2	2	2	2	2	2
	D															
	C															
	B															
	A															

spec ref	SEE NOTE 10	dr	Zhang Hong-Tu	2012/08/13	projection	MM	size A2 / scale 1:1
tolerance std ISO 406 ISO 1101	TOLERANCES UNLESS OTHERWISE SPECIFIED	eng	De-Ming Lu	2017/05/09			ecn no ELX-DG-18076-1
		chr	Fancy Zhang	2017/05/23			
		appr	Pei-Ming Zheng	2017/05/26	product family	PwrLoPro	rel level Released
surface - ISO 1302	linear 0.X ±0.30; 0.XX ±0.20; 0.XXX ±0.10; angular 0° ±2°	Amphenol FCi	title	PWR LoPro HEADER ASSEMBLY RA, PASSIVE GUIDE,S+P	dwg no	10122460	rev H
			cat. no.	-	Product - Customer Drw		sheet 9 of 10

© 2016 AFCI

Creo File - REV E - 2016-02-12

PART NUMBER	ROWS	SIGNALS 1	2	3	4	5	6	7	POWERS 1	2	3	4	5	6	7	8	9	10	11	12	13	14	15	16	17	18	19	20
10122460-010LF 35S + 20P	E	3	3	3	3	3	3	3	2	2	2	—	—	—	—	—	—	—	—	—	2	2	2	2	2	2	2	2
	D																											
	C																											
	B																											
	A																											

H H

PART NUMBER	ROWS	SIGNALS 1	2	3	4	5	POWERS 1	2
10122460-011LF 25S + 02P	E	2	32222	2	32222	2	1	2
	D							
	C							
	B							
	A							

H H

PART NUMBER	ROWS	SIGNALS 1	2	3	4	5	POWERS 1	2	3	4	5	6	7	8	9	10
10122460-013LF 25S + 10P	E	2	2	2	2	3	2	2	2	2	2	2	2	2	2	2
	D															
	C															
	B															
	A															

S S

CODE	DESCRIPTION
1	FOR LEVEL 1
2	FOR LEVEL 2
32222	FOR LEVEL 32222 (MIXED)
3	FOR LEVEL 3

spec ref	SEE NOTE 10	dr	Zhang Hong-Tu	2012/08/13	projection
tolerance std ISO 406 ISO 1101	TOLERANCES UNLESS OTHERWISE SPECIFIED	eng	De-Ming Lu	2017/05/09	MM
		chr	Fancy Zhang	2017/05/23	
		appr	Pei-Ming Zheng	2017/05/26	product family PwrLoPro
surface - ISO 1302	linear 0.X ±0.30; 0.XX ±0.20; 0.XXX ±0.10; angular 0° ±2°	Amphenol FCi	title PWR LoPro HEADER ASSEMBLY RA, PASSIVE GUIDE, S+P	dwg no 10122460	rev H
			cat. no. -	Product - Customer Drw	sheet 10 of 10

size A2 | scale 1:1 | ecn no ELX-DG-18076-1 | rel level **Released**

© 2016 AFCI

Creo File - REV E - 2016-02-12

OCEAN CHIPS
Океан Электроники
Поставка электронных компонентов

Компания «Океан Электроники» предлагает заключение долгосрочных отношений при поставках импортных электронных компонентов на взаимовыгодных условиях!

Наши преимущества:

- Поставка оригинальных импортных электронных компонентов напрямую с производств Америки, Европы и Азии, а так же с крупнейших складов мира;
- Широкая линейка поставок активных и пассивных импортных электронных компонентов (более 30 млн. наименований);
- Поставка сложных, дефицитных, либо снятых с производства позиций;
- Оперативные сроки поставки под заказ (от 5 рабочих дней);
- Экспресс доставка в любую точку России;
- Помощь Конструкторского Отдела и консультации квалифицированных инженеров;
- Техническая поддержка проекта, помощь в подборе аналогов, поставка прототипов;
- Поставка электронных компонентов под контролем ВП;
- Система менеджмента качества сертифицирована по Международному стандарту ISO 9001;
- При необходимости вся продукция военного и аэрокосмического назначения проходит испытания и сертификацию в лаборатории (по согласованию с заказчиком);
- Поставка специализированных компонентов военного и аэрокосмического уровня качества (Xilinx, Altera, Analog Devices, Intersil, Interpoint, Microsemi, Actel, Aeroflex, Peregrine, VPT, Syfer, Eurofarad, Texas Instruments, MS Kennedy, Miteq, Cobham, E2V, MA-COM, Hittite, Mini-Circuits, General Dynamics и др.);

Компания «Океан Электроники» является официальным дистрибьютором и эксклюзивным представителем в России одного из крупнейших производителей разъемов военного и аэрокосмического назначения **«JONHON»**, а так же официальным дистрибьютором и эксклюзивным представителем в России производителя высокотехнологичных и надежных решений для передачи СВЧ сигналов **«FORSTAR»**.

AVIC JONHON

«JONHON» (основан в 1970 г.)

Разъемы специального, военного и аэрокосмического назначения:

(Применяются в военной, авиационной, аэрокосмической, морской, железнодорожной, горно- и нефтедобывающей отраслях промышленности)

«FORSTAR» (основан в 1998 г.)

ВЧ соединители, коаксиальные кабели, кабельные сборки и микроволновые компоненты:

(Применяются в телекоммуникациях гражданского и специального назначения, в средствах связи, РЛС, а так же военной, авиационной и аэрокосмической отраслях промышленности).

FORSTAR®

Телефон: 8 (812) 309-75-97 (многоканальный)
Факс: 8 (812) 320-03-32
Электронная почта: ocean@oceanchips.ru
Web: http://oceanchips.ru/
Адрес: 198099, г. Санкт-Петербург, ул. Калинина, д. 2, корп. 4, лит. А