REVISIONS			
LTR	DESCRIPTION	DATE	APPROVED
M	REVISED PER ECN #T-11856	81 Apr 27	[illegible]
N	REVISED PER ECN T-20169	6-13-95	[illegible]
P	REV PER ECO 12-020967 CT	12-12	KH

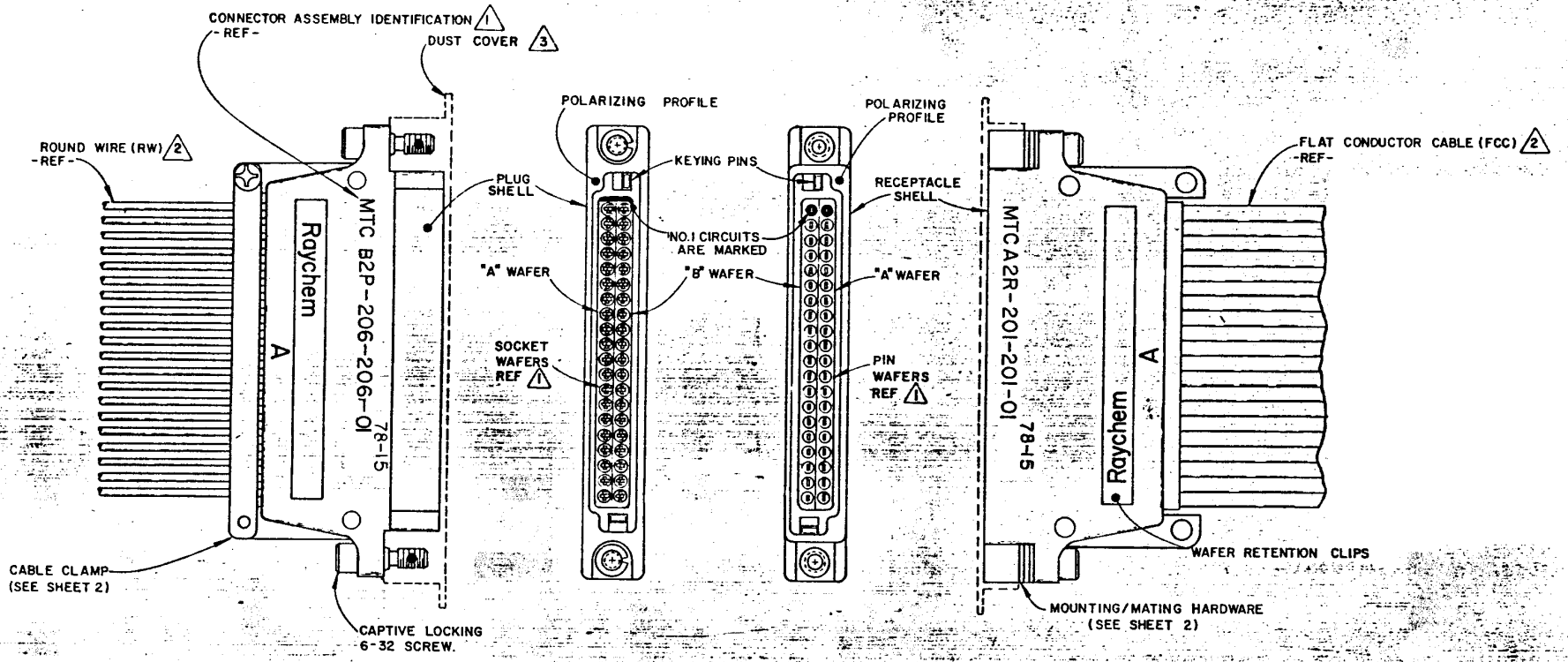

NOTES-

1. PLUG & RECEPTACLE SHELLS ACCEPT BOTH PIN & SOCKET WAFERS INTERCHANGEABLY. FOR SHELL AND MOUNTING DETAILS, SEE SHEET 2. FOR WAFER DETAILS, SEE SHEET 3.
2. THE TERMINATED AND ASSEMBLED CONNECTOR IS SHOWN FOR REFERENCE. SEE SHEET 4 FOR ORDERING INFORMATION.
3. DUST COVER SUPPLIED WITH EACH SHELL.

CUSTOMER DRAWING

© 1976

DRAWN	V.D.T.	9-13-76
CHECKED	[illegible]	1-25-77
APPROVED		
APPROVED		
APPROVED		

Raychem
SPECIFICATION CONTROL DRAWING

MTC CONNECTOR
TYPE I, .100 INCH CENTERS
ASSEMBLY

UNLESS OTHERWISE SPECIFIED DIMENSIONS ARE IN INCHES AND TOLERANCES ARE
X.XX ±—
X.X ±—
±—

SIZE	CODE IDENT	DWG. NO
C	NO 06090	D652-0001

DO NOT SCALE THIS DRAWING SHEET 1 OF 5

If this document is printed it becomes uncontrolled.
Check with the web for latest revision.

REVISIONS			
LTR	DESCRIPTION	DATE	APPROVED
	SEE SHEET 1		

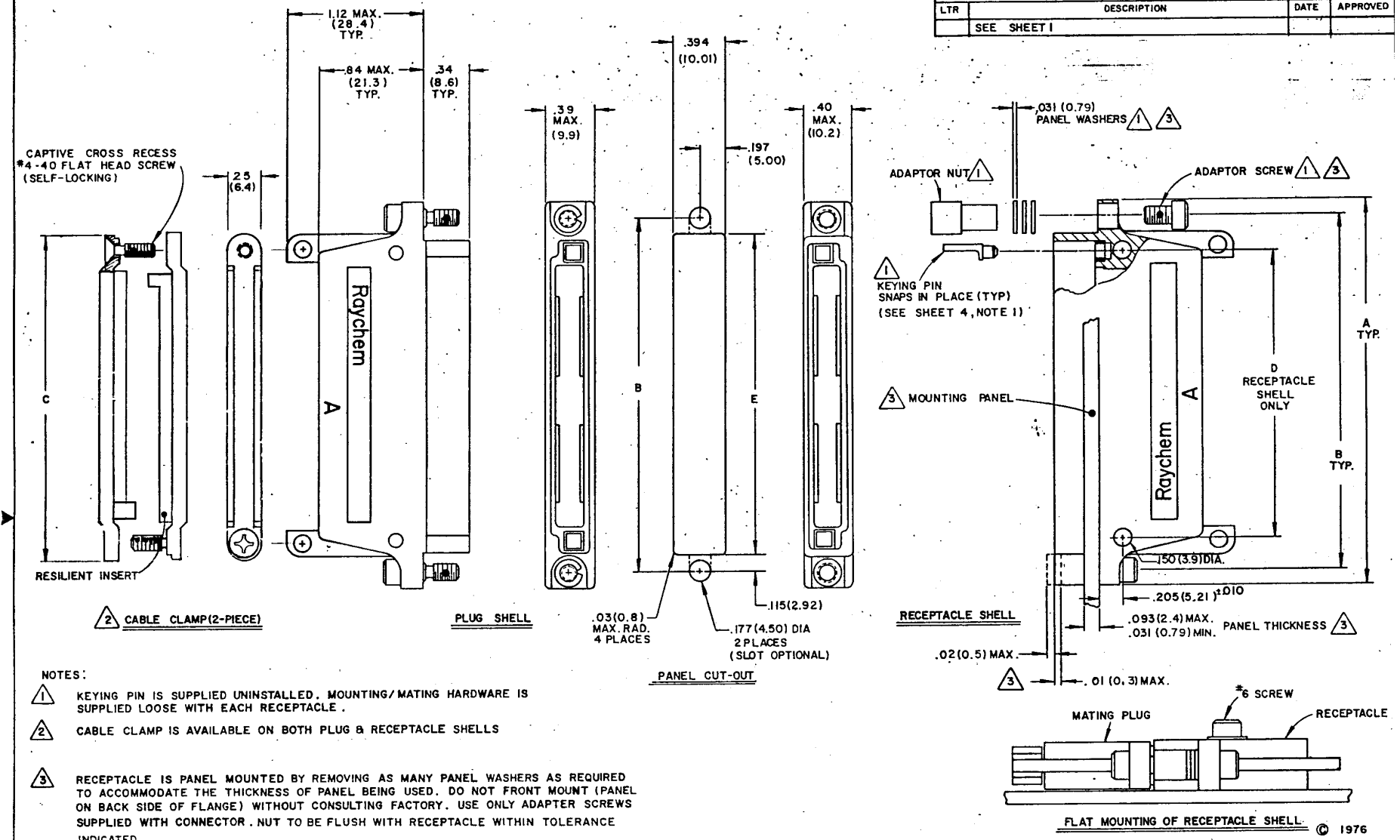

© 1976

NOTES:

1. KEYING PIN IS SUPPLIED UNINSTALLED. MOUNTING/MATING HARDWARE IS SUPPLIED LOOSE WITH EACH RECEPTACLE.
2. CABLE CLAMP IS AVAILABLE ON BOTH PLUG & RECEPTACLE SHELLS
3. RECEPTACLE IS PANEL MOUNTED BY REMOVING AS MANY PANEL WASHERS AS REQUIRED TO ACCOMMODATE THE THICKNESS OF PANEL BEING USED. DO NOT FRONT MOUNT (PANEL ON BACK SIDE OF FLANGE) WITHOUT CONSULTING FACTORY. USE ONLY ADAPTER SCREWS SUPPLIED WITH CONNECTOR. NUT TO BE FLUSH WITH RECEPTACLE WITHIN TOLERANCE INDICATED.

DIMENSION	SHELL SIZE	
	1 INCH	2 INCH
A	2.00 (50.8)	3.00 (76.2)
B	1.750 (44.45)	2.750 (69.85)
C	1.50 (38.1)	2.50 (63.5)
D	1.270 (32.26)	2.270 (57.66)
E	1.520 (38.61)	2.520 (64.01)
MATED LENGTH (MAX)	W/CLAMPS	W/O
	2.6 (66)	2.1 (53.3)

DRAWN	V.D.T.	9-13-76
CHECKED	[illegible]	1-25-77
APPROVED	[illegible]	2-7-77
APPROVED		
APPROVED		

UNLESS OTHERWISE SPECIFIED DIMENSIONS ARE IN INCHES (MM) AND TOLERANCES ARE:
.XXX : ±.005 (0.13)
.XX : ±.02 (0.5)
— : ±—

Raychem
SPECIFICATION CONTROL DRAWING

RAYCHEM CORPORATION 300 CONSTITUTION DRIVE MENLO PARK, CA 94025

TITLE

MTC CONNECTOR, TYPE I, .100 INCH CENTERS SHELL DETAIL & MOUNTING

SIZE	CODE IDENT.	DWG. NO.
C	NO. 06090	D652-0001

DO NOT SCALE THIS DRAWING | SHEET 2 OF 5

If this document is printed it becomes uncontrolled.
Check with the web for latest revision.

REVISIONS			
LTR	DESCRIPTION	DATE	APPROVED
	SEE SHEET 1		

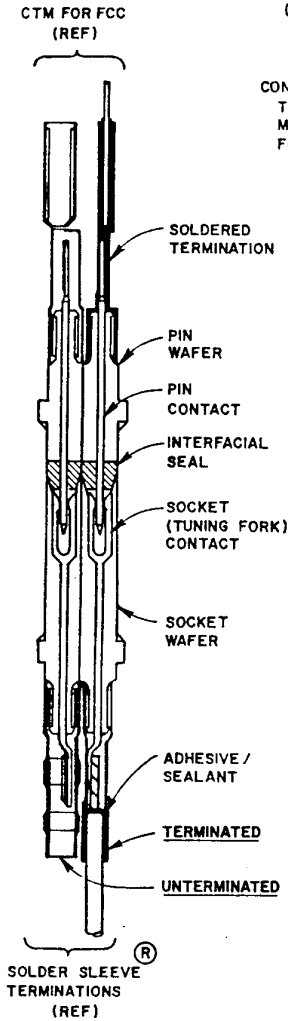

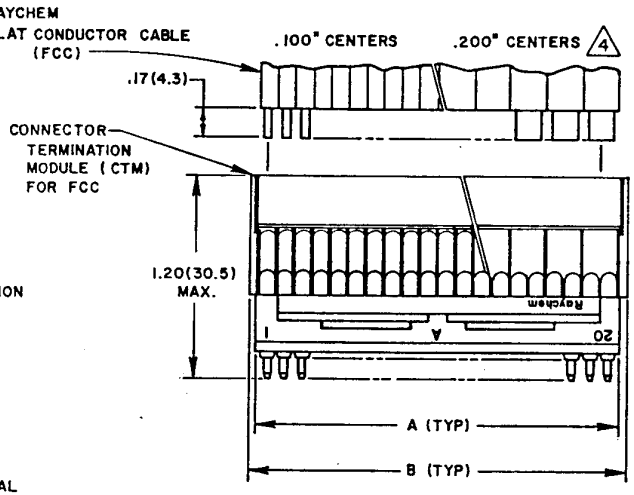

-XX1 WAFER

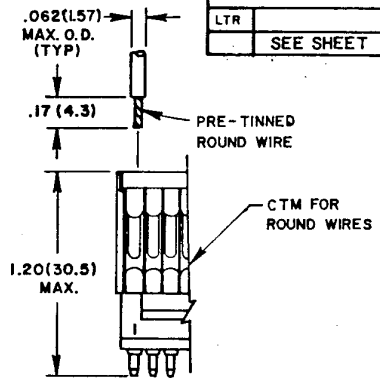

-XX3 WAFER

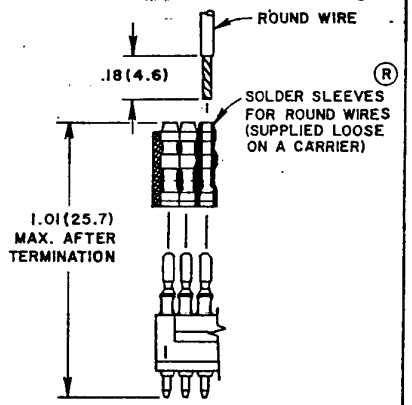

-XX5 WAFER

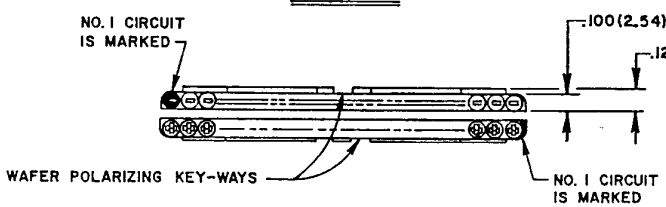

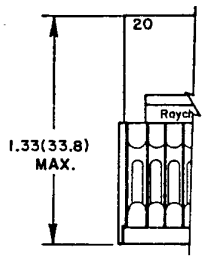

-XX4 WAFER

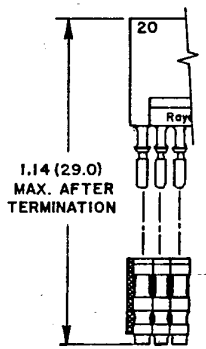

-XX6 WAFER

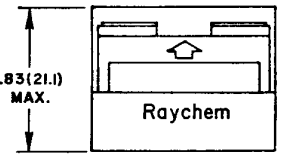

3 REPLACES A OR B WAFER

-X00 WAFER (DUMMY)

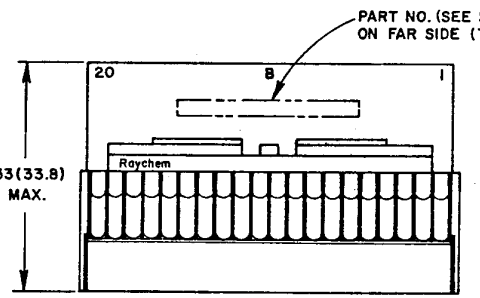

-XX2 WAFER

WAFER SIZE	A	B MAX.
1-INCH	1.03(26.2)	1.12(28.4)
2-INCH	2.03(51.6)	2.12(53.8)

NOTES:

1. FOR ORDERING INFORMATION SEE SHEET 4. FOR TERMINATION TOOLING REQUIREMENTS SEE SHEET 5.
2. ANY A AND B WAFER OF THE SAME WIDTH MAY BE INSTALLED IN EITHER PLUG OR RECEPTACLE SHELLS, INTERCHANGEABLY (SEE SHEET 1).
3. A DUMMY WAFER (NO CONTACTS) MAY BE SUBSTITUTED FOR ANY STYLE WAFER OF THE SAME WIDTH (SEE SHEET 4)
4. 2-INCH WAFERS ARE SHOWN FOR REFERENCE.

If this document is printed it becomes uncontrolled.
Check with the web for latest revision.

© 1976

DRAWN	CHANG.	1-24-77
CHECKED	R.M. Neil	1-25-77
APPROVED	H. Hall	2-7-77
APPROVED		
APPROVED		

UNLESS OTHERWISE SPECIFIED DIMENSIONS ARE IN INCHES AND TOLERANCES ARE:(MM)
.XXX : ±—.005 (0.13)
.XX : ±—.02 (0.5)
— : ±—

Raychem
SPECIFICATION CONTROL DRAWING
RAYCHEM CORPORATION 300 CONSTITUTION DRIVE MENLO PARK, CA 94025

TITLE
MTC CONNECTOR, TYPE I, .100 INCH CENTERS WAFER DETAIL

SIZE	CODE IDENT.	DWG. NO.
C	NO. 06090	D652-0001

DO NOT SCALE THIS DRAWING

REVISIONS			
LTR	DESCRIPTION	DATE	APPROVED
	SEE SHEET 1		

MULTIPLE TERMINATION CONNECTOR

SERIES: A-125° C RATING BLACK ANODIZE FINISH
B-150° C RATING NICKEL PLATE
C-150° C RATING CADMIUM PLATE

"A" WAFER DESIGNATION 7

"B" WAFER DESIGNATION 7

SHELL MODIFICATION CODE:
00-WITHOUT CABLE CLAMP BUT WITH EARS
01-WITH CABLE CLAMP 4

MTC X XX-XXX-XXX-XX-[YY]

KEYING CODE (SEE CHART) 1

CONTACT STYLE, WIRE TYPE:
0- NO CONTACTS (DUMMY)
1- PIN, FCC
2- SOCKET, FCC 3
3- PIN, R.W. (CTM)
4- SOCKET, R.W. (CTM)
5- PIN, R.W.-SOLDER SLEEVE Ⓡ
6- SOCKET, R.W.-SOLDER SLEEVE Ⓡ
7- PIN, R.W. GRIPPER RING SOLDER SLEEVE Ⓡ
8- SOCKET, R.W. GRIPPER RING SOLDER SLEEVE Ⓡ

NUMBER OF CONDUCTORS PER WAFER: 05,10,20,(SEE TABLE)
OR 10- 1 INCH DUMMY WAFER
20- 2 INCH DUMMY WAFER

SHELL TYPE:
P- PLUG
R- RECEPTACLE

CONNECTOR WIDTH (NOM.)
1- 1 INCH
2- 2 INCH

ACCESSORIES / REPLACEMENTS 5			
DESCRPTION	QTY (REF)	FOR USE WITH SERIES A OR B	SERIES C
CABLE CLAMP, 1-INCH	2	CB1276-000	CHA-0091
CABLE CLAMP, 2-INCH	2	CB1277-000	CHA-0092
KEYING PIN	2	D659-0045	
ADAPTOR NUT	2	D659-0043	CHA-0095
PANEL WASHER	6	D659-0042	CHA-0093
ADAPTOR SCREW	2	D659-0044	CHA-0094
MOCK-UP WAFER 1-INCH	A/R	D659-0063	
MOCK-UP WAFER 2-INCH	A/R	D659-0064	
SOLDER SLEEVE Ⓡ	A/R	—	
A SERIES, 1-INCH STRIP		D659-0028	
A SERIES, 2-INCH STRIP		D659-0038	
B OR C SERIES, 1-INCH STRIP		CTA-0026	
B OR C SERIES, 2-INCH STRIP		CTA-0027	

WIRE TYPE	CONDUCTOR CENTER SPACING	NUMBER OF CONDUCTORS PER WAFER		CONDUCTOR AWG.	MAXIMUM ROUND WIRE O.D.
RW	.100	10	20	26-20	.062 (1.57)
FCC 3				24-22	
CONNECTOR WIDTH (NOM)		1 INCH	2 INCH		

CABLE ACCOMMODATION

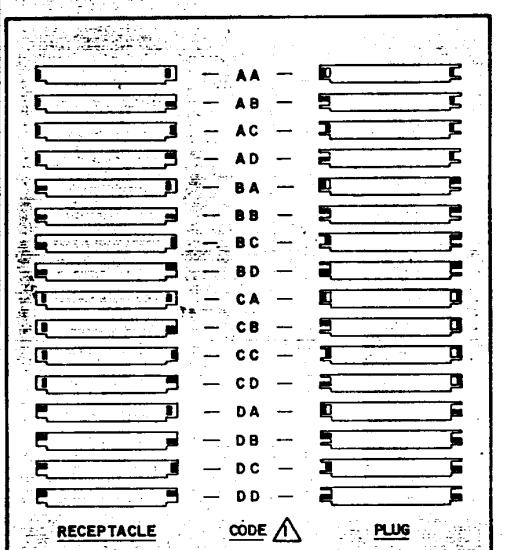

KEYING CHART

NOTES-

1. KEYING CODE DOES NOT FORM A PART OF RAYCHEM PART NUMBERING SYSTEM AND SHOULD BE OMITTED WHEN ORDERING. SHELLS ARE SUPPLIED WITH A BLANK SPACE FOR KEYING CODE, KEYING PINS ARE SUPPLIED UN-INSTALLED.
2. WHEN SUPPLIED AS PART OF A COMPLETE CONNECTOR, SHELL WILL BE MARKED WITH COMPLETE CONNECTOR PART NUMBER. WHEN SUPPLIED SEPARATELY, SHELL WILL BE PROVIDED WITH BLANKS FOR WAFER DESIGNATION.
3. CONNECTOR IS DESIGNED TO ACCEPT RAYCHEM FLAT CABLE PER RAYCHEM SPECIFICATION 50. (125°C OPERATION)
4. FOR TORQUE REQUIREMENTS ON MATING SEE RCPS 200-21.
5. FOR ORDERING REPLACEMENT OR ACCESSORY ITEMS, REFER TO THE RAYCHEM SPECIFICATION CONTROL DRAWINGS INDICATED IN THE TABLE.
6. EXAMPLES OF PART NUMBERING:

MTCB 2P-205-205-01 — COMPLETE 150° C CONNECTOR WITH:
2" PLUG SHELL (NO CABLE CLAMP) Ⓡ
A PIN WAFER WITH SOLDER SLEEVE Ⓡ ROUND WIRE TERMINATIONS, .100 CENTERS
B PIN WAFER WITH FLAT CABLE MTM, .100 CENTERS.

MTCB 2X-XXX-206 — B SOCKET WAFER WITH SOLDER SLEEVE Ⓡ ROUND WIRE TERMINATIONS.
MTCX 2X-200-200 — 2" DUMMY WAFER

7. IN TWO CASES THE WAFER DESIGNATION IS USED IN SHELL ASSEMBLY PART NUMBERING:
-010-010= 1" SHELL ASSEMBLY
-020-020= 2" SHELL ASSEMBLY
THESE NUMBERS SHOULD BE USED WHEN ORDERING SHELLS ONLY.

If this document is printed it becomes uncontrolled.
Check with the web for latest revision.

© 1976

DRAWN	V.D.T.	9-13-76
CHECKED	[illegible]	1-25-77
APPROVED	[illegible]	2-7-77
APPROVED		
APPROVED		

UNLESS OTHERWISE SPECIFIED DIMENSIONS ARE IN INCHES (MM) AND TOLERANCES ARE
.XXX ±.—
.XX ±.—
.— ±.—

Raychem
SPECIFICATION CONTROL DRAWING
RAYCHEM CORPORATION 300 CONSTITUTION DRIVE MENLO PARK, CA. 94025

TITLE
MTC CONNECTOR
TYPE I, .100 INCH CENTERS
ORDERING INFORMATION

SIZE	CODE IDENT	DWG NO.
C	NO 06090	D652-0001

DO NOT SCALE THIS DRAWING — SHEET 4 OF 5

If this document is printed it becomes uncontrolled.
Check with the web for latest revision.

REVISIONS			
LTR	DESCRIPTION	DATE	APPROVED
	SEE SHEET 1		

SPECIFICATION

Refer to Raychem Specification D-6006
for complete details
Unless Otherwise Specified

Ratings

Temperature	MTCA	-65°C to +125°C
	MTCB	-65°C to +150°C
	MTCC	-65°C to +150°C
Voltage	500 volts	
Current	5 amps	

Materials

MTM Insulating Body	Polyvinylidene Fluoride
Solder Sleeve Tubing	Polyvinylidene Fluoride
Sealing Material	Thermally Stabilized Thermoplastic
Wafer Material	High grade Polyarylene Thermoplastic
Solder	MTCA -Sn63 per QQ-S-571
	MTCB -Sb5 per QQ-S-571
Flux	Per QQ-S-571 type SRAP
Contact Finish	Gold Plated per MIL-G-45204, Type 1, Grade C, Class 1 on mating surfaces
Shell Finish	MTCA -Black Anodized per MIL-A-8625, Type II
	MTCB -Electroless nickel per MIL-C-26074, Class 3, Grade B
	MTCC -Cadmium plate per QQ-P-416 over nickel underplate
Mounting/Mating Hardware	Stainless Steel, passivated for MTCA and MTCB connectors
	Stainless Steel, Cadmium plated for BTCC connectors
Elastomeric Seals	Fluorosilicone Rubber

Tooling Required

Consult Factory For Tooling Required

Summary of Specifications

Test	Test Method	Performance Requirement	
Insulation Resistance	*Method 3003		
Room Temperature	23°C	5000 Megohms, minimum	
Upper Rated Temperature	after 1000 hours	200 Megohms, minimum	
Dielectric Withstanding Voltage			
Sea Level	*Method 3001, 1500 VAC rms, 60 Hz	No breakdown or flashover	
High Altitude	*Method 105, 70,000 ft. 375 VAC rms, 60 Hz	No breakdown or flashover	
Contact Resistance			
At Rated Current	Initial	10 milliohms	maximum
	After Conditioning	12 milliohms	
At Low Level Current	Initial	10 milliohms	
	After Conditioning	14 milliohms	
Shell-to-Shell Conductivity	1 amp	50 millivolts	maximum
Electrical Engagement	Fully Mated Position	.050" minimum	
		Engaging	Separating
Contact Engaging and Separating Forces	Initial (max. avg.)	9 oz. max.	1 oz. min.
	After Conditioning	12 oz. max.	1 oz. min.
Durability	500 cycles	No damage, pass Contact Resistance	

Tensile Strength		
Flat Cable		100 lbs. per inch of cable width minimum
Round Wires		20 lbs. for AWG 20
		12 lbs. for AWG 22
		8 lbs. for AWG 24
		5 lbs. for AWG 26 minimum
Insert Retention	*Method 2010, 100 psi	Retain normal position
Contact Retention	*Method 2007, 10 lbs. load	Axial displacement not to exceed 0.02 inches
Connector Mating and Unmating	Per D-6006, 10 cycles	Pass Contact Resistance and Engaging/Separating Forces
Maintance Aging	3 mating cycles, 5 wafer removal cycles, 3 mating cycles	No damage
Vibration	*Method 2005, (20g's peak) Test Condition IV	No physical damage or electrical discontinuity greater than 1 microsecond
Mechanical Shock	*Method 2004, 6 ms, Sawtooth 9.7 ft/sec, 100g's	No physical damage or electrical discontinuity greater than 1 microsecond
Thermal Shock	*Method 1003, rated temperatures	No cracking, crazing or physical damage
Temperature Life	*Method 1005, 1000 hours	Pass Insulation Resistance, Elevated and Ambient Temperature and Contact Resistance
Humidity	*Method 1002, Type II 10 cycles, 90-98% relative humidity	Insulation Resistance of 100 Megohms, minimum
Altitude Immersion	*Method 1004, 75,000 ft. 3 cycles	Insulation Resistance of 1000 Megohms, minimum Pass Dielectric Withstanding Voltage
Altitude-Low Temp.	70,000 ft., -50°C	Dielectric Withstanding Voltage of 625 volts, 60 Hz Pass Insulation Resistance and Dielectric Withstanding Voltage at Sea Level
Salt Spray (Corrosion) △	*Method 1001 (48 hours for MTCA and MTCB connectors) (500 hours for MTCC connectors)	No damage detrimental to connector opperation
Ozone Resistance	0.010 to 0.015% ozone in air for 2 hours	No cracking in termination area, pass Insulation Resistance
Fungus Resistance	MIL-STD-454, Req. 4	No fungus growth
Fluid Immersion	Misc. Fluids (see D-6006)	No damage sufficient to prevent functioning
Peremeability	Indicator per MIL-I-17214	2.0 maximum
Solderability	**Method 208 MTCA-Sn63 solder at 230°C MTCB-Sb5 solder at 316°C	95% minimum coverage

*MIL-STD-1344 TEST METHODS FOR ELECTRICAL CONNECTORS
**MIL-STD-202 TEST METHODS FOR ELECTRICAL COMPONENT PARTS

△ ENTIRE SYSTEM MUST BE CADMIUM PLATED FOR 500 HOURS SALT SPRAY COMPATABILITY TO BE EFFECTIVE.

NOTES:
1. THIS SPECIFICATION SHEET TAKES PRECEDENCE OVER DOCUMENTS REFERENCED HEREIN. REFERENCE DOCUMENTS SHALL BE OF THE ISSUES IN EFFECT ON DATE OF INVITATION TO BID.

SPECIFICATION CONTROL DRAWING

D652D001.DRW

DRAWN	LUTTICKEN	1-22-86
CHECKED		
APPROVED		
APPROVED		

UNLESS OTHERWISE SPECIFIED DIMENSIONS ARE IN INCHES. METRIC DIMENSIONS ARE IN PARENTHESIS

DO NOT SCALE THIS DRAWING

Raychem

RAYCHEM CORPORATION
300 CONSTITUTION DRIVE
MENLO PARK, CALIFORNIA 94025

TITLE
MTC CONNECTOR
TYPE I, .100 INCH CENTERS
SPECIFICATION SHEET

SIZE	CODE IDENT. NO.	DWG. NO.	
C	06090	D652-0001	
		WEIGHT	SHEET 5 OF 5

OCEAN CHIPS
Океан Электроники
Поставка электронных компонентов

Компания «Океан Электроники» предлагает заключение долгосрочных отношений при поставках импортных электронных компонентов на взаимовыгодных условиях!

Наши преимущества:

- Поставка оригинальных импортных электронных компонентов напрямую с производств Америки, Европы и Азии, а так же с крупнейших складов мира;
- Широкая линейка поставок активных и пассивных импортных электронных компонентов (более 30 млн. наименований);
- Поставка сложных, дефицитных, либо снятых с производства позиций;
- Оперативные сроки поставки под заказ (от 5 рабочих дней);
- Экспресс доставка в любую точку России;
- Помощь Конструкторского Отдела и консультации квалифицированных инженеров;
- Техническая поддержка проекта, помощь в подборе аналогов, поставка прототипов;
- Поставка электронных компонентов под контролем ВП;
- Система менеджмента качества сертифицирована по Международному стандарту ISO 9001;
- При необходимости вся продукция военного и аэрокосмического назначения проходит испытания и сертификацию в лаборатории (по согласованию с заказчиком);
- Поставка специализированных компонентов военного и аэрокосмического уровня качества (Xilinx, Altera, Analog Devices, Intersil, Interpoint, Microsemi, Actel, Aeroflex, Peregrine, VPT, Syfer, Eurofarad, Texas Instruments, MS Kennedy, Miteq, Cobham, E2V, MA-COM, Hittite, Mini-Circuits, General Dynamics и др.);

Компания «Океан Электроники» является официальным дистрибьютором и эксклюзивным представителем в России одного из крупнейших производителей разъемов военного и аэрокосмического назначения **«JONHON»**, а так же официальным дистрибьютором и эксклюзивным представителем в России производителя высокотехнологичных и надежных решений для передачи СВЧ сигналов **«FORSTAR»**.

AVIC JONHON

«JONHON» (основан в 1970 г.)

Разъемы специального, военного и аэрокосмического назначения:

(Применяются в военной, авиационной, аэрокосмической, морской, железнодорожной, горно- и нефтедобывающей отраслях промышленности)

«FORSTAR» (основан в 1998 г.)

ВЧ соединители, коаксиальные кабели, кабельные сборки и микроволновые компоненты:

(Применяются в телекоммуникациях гражданского и специального назначения, в средствах связи, РЛС, а так же военной, авиационной и аэрокосмической отраслях промышленности).

FORSTAR®

Телефон: 8 (812) 309-75-97 (многоканальный)
Факс: 8 (812) 320-03-32
Электронная почта: ocean@oceanchips.ru
Web: http://oceanchips.ru/
Адрес: 198099, г. Санкт-Петербург, ул. Калинина, д. 2, корп. 4, лит. А