Low Cost, Single-Supply Differential Amplifier

AD626

FEATURES

Pin Selectable Gains of 10 and 100
True Single-Supply Operation
- **Single-Supply Range of +2.4 V to +10 V**
- **Dual-Supply Range of ±1.2 V to ±6 V**
- **Wide Output Voltage Range of 30 mV to 4.7 V**

Optional Low-Pass Filtering
Excellent DC Performance
- **Low Input Offset Voltage: 500 μV Max**
- **Large Common-Mode Range: 0 V to +54 V**
- **Low Power: 1.2 mW (V_S = +5 V)**
- **Good CMR of 90 dB Typ**

AC Performance
- **Fast Settling Time: 24 μs (0.01%)**

Includes Input Protection
- **Series Resistive Inputs (R_{IN} = 200 kΩ)**
- **RFI Filters Included**
- **Allows 50 V Continuous Overload**

APPLICATIONS

Current Sensing
Interface for Pressure Transducers, Position Indicators, Strain Gages, and Other Low Level Signal Sources

CONNECTION DIAGRAM
8-Lead Plastic Mini-DIP (N) and SOIC (R) Packages

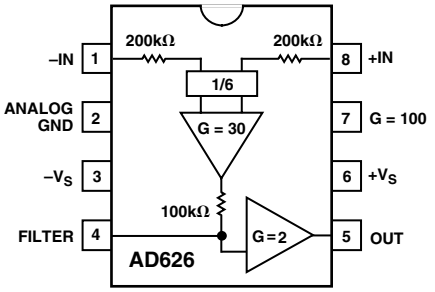

PRODUCT DESCRIPTION

The AD626 is a low cost, true single-supply differential amplifier designed for amplifying and low-pass filtering small differential voltages from sources having a large common-mode voltage.

The AD626 can operate from either a single supply of +2.4 V to +10 V, or dual supplies of ±1.2 V to ±6 V. The input common-mode range of this amplifier is equal to 6 ($+V_S$ – 1 V) which provides a +24 V CMR while operating from a +5 V supply. Furthermore, the AD626 features a CMR of 90 dB typ.

The amplifier's inputs are protected against continuous overload of up to 50 V, and RFI filters are included in the attenuator network. The output range is +0.03 V to +4.9 V using a +5 V supply. The amplifier provides a preset gain of 10, but gains between 10 and 100 can be easily configured with an external resistor. Furthermore, a gain of 100 is available by connecting the G = 100 pin to analog ground. The AD626 also offers low-pass filter capability by connecting a capacitor between the filter pin and analog ground.

The AD626A and AD626B operate over the industrial temperature range of –40°C to +85°C. The AD626 is available in two 8-lead packages: a plastic mini-DIP and SOIC.

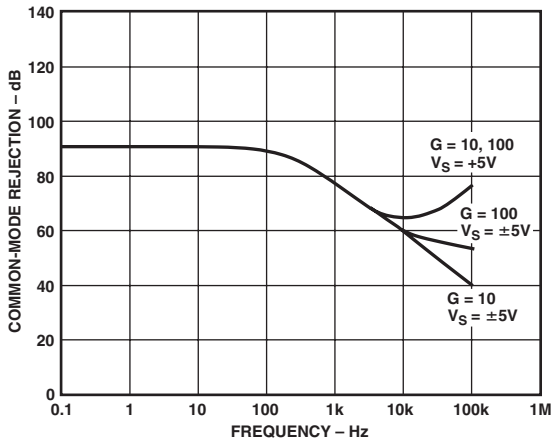

Figure 1. Common-Mode Rejection vs. Frequency

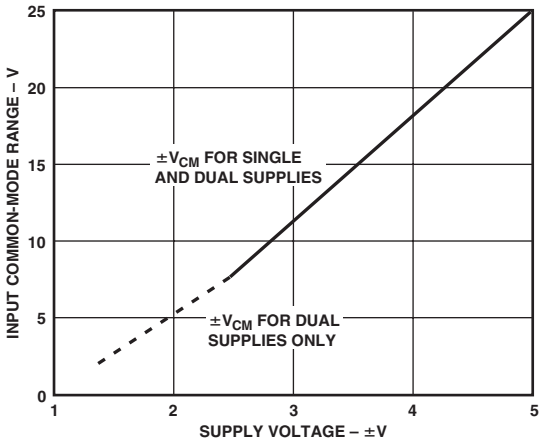

Figure 2. Input Common-Mode Range vs. Supply

REV. D

Information furnished by Analog Devices is believed to be accurate and reliable. However, no responsibility is assumed by Analog Devices for its use, nor for any infringements of patents or other rights of third parties that may result from its use. No license is granted by implication or otherwise under any patent or patent rights of Analog Devices. Trademarks and registered trademarks are the property of their respective companies.

One Technology Way, P.O. Box 9106, Norwood, MA 02062-9106, U.S.A.
Tel: 781/329-4700 **www.analog.com**
Fax: 781/326-8703
© 2003 Analog Devices, Inc. All rights reserved.

AD626–SPECIFICATIONS

SINGLE SUPPLY (@+V_S = +5 V and T_A = 25°C, unless otherwise noted.)

Model Parameter	Condition	AD626A Min	Typ	Max	AD626B Min	Typ	Max	Unit
GAIN								
Gain Accuracy	Total Error							
Gain = 10	@V_{OUT} ≥ 100 mV dc		0.4	1.0		0.2	0.6	%
Gain = 100	@V_{OUT} ≥ 100 mV dc		0.1	1.0		0.5	0.6	%
Over Temperature, $T_A = T_{MIN}$ to T_{MAX}	G = 10			50			30	ppm/°C
	G = 100			150			120	ppm/°C
Gain Linearity								
Gain = 10	@V_{OUT} ≥ 100 mV dc		0.014	0.016		0.014	0.016	%
Gain = 100	@V_{OUT} ≥ 100 mV dc		0.014	0.02		0.014	0.02	%
OFFSET VOLTAGE								
Input Offset Voltage			1.9	2.5		1.9	2.5	mV
vs. Temperature	T_{MIN} to T_{MAX}, G = 10 or 100			2.9			2.9	mV
vs. Temperature	T_{MIN} to T_{MAX}, G = 10 or 100			6			6	µV/°C
vs. Supply Voltage (PSR)								
+PSR		74	80		74	80		dB
–PSR		64	66		64	66		dB
COMMON-MODE REJECTION	R_L = 10 kΩ							
+CMR Gain = 10, 100	f = 100 Hz, V_{CM} = +24 V	66	90		80	90		dB
±CMR Gain = 10, 100	f = 10 kHz, V_{CM} = +6 V	55	64		55	64		dB
–CMR Gain = 10, 100*	f = 100 Hz, V_{CM} = –2 V	60	85		73	85		dB
COMMON-MODE VOLTAGE RANGE								
+CMV Gain = 10	CMR > 85 dB		+24			+24		V
–CMV Gain = 10	CMR > 85 dB		–2			–2		V
INPUT								
Input Resistance								
Differential			200			200		kΩ
Common-Mode			100			100		kΩ
Input Voltage Range (Common-Mode)			6 (V_S – l)			6 (V_S – l)		V
OUTPUT								
Output Voltage Swing	R_L = 10 kΩ							
Positive	Gain = 10	4.7	4.90		4.7	4.90		V
	Gain = 100	4.7	4.90		4.7	4.90		V
Negative	Gain = 10	0.03			0.03			V
	Gain = 100	0.03			0.03			V
Short Circuit Current								
$+I_{SC}$			12			12		mA
NOISE								
Voltage Noise RTI								
Gain = 10	f = 0.1 Hz–10 Hz		2			2		µV p-p
Gain = 100	f = 0.1 Hz–10 Hz		2			2		µV p-p
Gain = 10	f = 1 kHz		0.25			0.25		µV/√Hz
Gain = 100	f = 1 kHz		0.25			0.25		µV/√Hz
DYNAMIC RESPONSE								
–3 dB Bandwidth	V_{OUT} = +1 V dc		100			100		kHz
Slew Rate, T_{MIN} to T_{MAX}	Gain = 10	0.17	0.22		0.17	0.22		V/µs
	Gain = 100	0.1	0.17		0.1	0.17		V/µs
Settling Time	to 0.01%, 1 V Step		24			22		µs
POWER SUPPLY								
Operating Range	$T_A = T_{MIN}$ to T_{MAX}	2.4	5	12	2.4	5	10	V
Quiescent Current	Gain = 10		0.16	0.20		0.16	0.20	mA
	Gain = 100		0.23	0.29		0.23	0.29	mA
TRANSISTOR COUNT	Number of Transistors		46			46		

*At temperatures above 25°C, –CMV degrades at the rate of 12 mV/°C; i.e., @ 25°C CMV = –2 V, @ 85°C CMV = –1.28 V.

Specifications subject to change without notice.

DUAL SUPPLY (@+V_S = ±5 V and T_A = 25°C, unless otherwise noted.)

Model Parameter	Condition	AD626A Min	Typ	Max	AD626B Min	Typ	Max	Unit
GAIN								
Gain Accuracy	Total Error							
Gain = 10	R_L = 10 kΩ		0.2	0.5		0.1	0.3	%
Gain = 100			0.25	1.0		0.15	0.6	%
Over Temperature, $T_A = T_{MIN}$ to T_{MAX}	G = 10			50			30	ppm/°C
	G = 100			100			80	ppm/°C
Gain Linearity								
Gain = 10			0.045	0.055		0.045	0.055	%
Gain = 100			0.01	0.015		0.01	0.015	%
OFFSET VOLTAGE								
Input Offset Voltage			50	500		50	250	µV
vs. Temperature	T_{MIN} to T_{MAX}, G = 10 or 100			1.0			0.5	mV
vs. Temperature	T_{MIN} to T_{MAX}, G = 10 or 100		1.0			0.5		µV/°C
vs. Supply Voltage (PSR)								
+PSR		74	80		74	80		dB
–PSR		64	66		64	66		dB
COMMON-MODE REJECTION	R_L = 10 kΩ							
+CMR Gain = 10, 100	f = 100 Hz, V_{CM} = +24 V	66	90		80	90		dB
±CMR Gain = 10, 100	f = 10 kHz, V_{CM} = 6 V	55	60		55	60		dB
COMMON-MODE VOLTAGE RANGE								
+CMV Gain = 10	CMR > 85 dB		26.5			26.5		V
–CMV Gain = 10	CMR > 85 dB		32.5			32.5		V
INPUT								
Input Resistance								
Differential			200			200		kΩ
Common-Mode			110			110		kΩ
Input Voltage Range (Common-Mode)			6 (V_S – l)			6 (V_S – l)		V
OUTPUT								
Output Voltage Swing	R_L = 10 kΩ							
Positive	Gain = 10, 100	4.7	4.90		4.7	4.90		V
Negative	Gain = 10	–1.65	–2.1		–1.65	–2.1		V
	Gain = 100	–1.45	–1.8		–1.45	–1.8		V
Short Circuit Current								
$+I_{SC}$			12			12		mA
$-I_{SC}$			0.5			0.5		mA
NOISE								
Voltage Noise RTI								
Gain = 10	f = 0.1 Hz–10 Hz		2			2		µV p-p
Gain = 100	f = 0.1 Hz–10 Hz		2			2		µV p-p
Gain = 10	f = 1 kHz		0.25			0.25		µV/√Hz
Gain = 100	f = 1 kHz		0.25			0.25		µV/√Hz
DYNAMIC RESPONSE								
–3 dB Bandwidth	V_{OUT} = +1 V dc		100			100		kHz
Slew Rate, T_{MIN} to T_{MAX}	Gain = 10	0.17	0.22		0.17	0.22		V/µs
	Gain = 100	0.1	0.17		0.1	0.17		V/µs
Settling Time	to 0.01%, 1 V Step		24			22		µs
POWER SUPPLY								
Operating Range	$T_A = T_{MIN}$ to T_{MAX}	±1.2	±5	±6	±1.2	±5	±6	V
Quiescent Current	Gain = 10		1.5	2		1.5	2	mA
	Gain = 100		1.5	2		1.5	2	mA
TRANSISTOR COUNT	Number of Transistors		46			46		

Specifications subject to change without notice.

ABSOLUTE MAXIMUM RATINGS[1]

Supply Voltage . . . . . +36V
Internal Power Dissipation[2]
Peak Input Voltage . . . . . +60 V
Maximum Reversed Supply Voltage Limit . . . . . –34V
Output Short Circuit Duration . . . . . Indefinite
Storage Temperature Range (N, R) . . . . . –65°C to +125°C
Operating Temperature Range
AD626A/AD626B . . . . . –40°C to +85°C
Lead Temperature Range (Soldering 60 sec) . . . . . +300°C

NOTES

[1]Stresses above those listed under Absolute Maximum Ratings may cause permanent damage to the device. This is a stress rating only; functional operation of the device at these or any other conditions above those indicated in the operational section of this specification is not implied. Exposure to absolute maximum rating conditions for extended periods may affect device reliability.

[2] 8-Lead Plastic Package: θ_{JA} = 100°C/W; θ_{JC} = 50°C/W.
8-Lead SOIC Package: θ_{JA} = 155°C/W; θ_{JC} = 40°C/W.

ORDERING GUIDE

Model	Temperature Range	Package Description	Package Option
AD626AN	–40°C to +85°C	Plastic DIP	N-8
AD626AR	–40°C to +85°C	Small Outline IC	R-8
AD626BN	–40°C to +85°C	Plastic DIP	N-8
AD626AR-REEL	–40°C to +85°C	13" Tape and Reel	
AD626AR-REEL7	–40°C to +85°C	7" Tape and Reel	

METALLIZATION PHOTOGRAPH

Dimensions shown in inches and (mm).

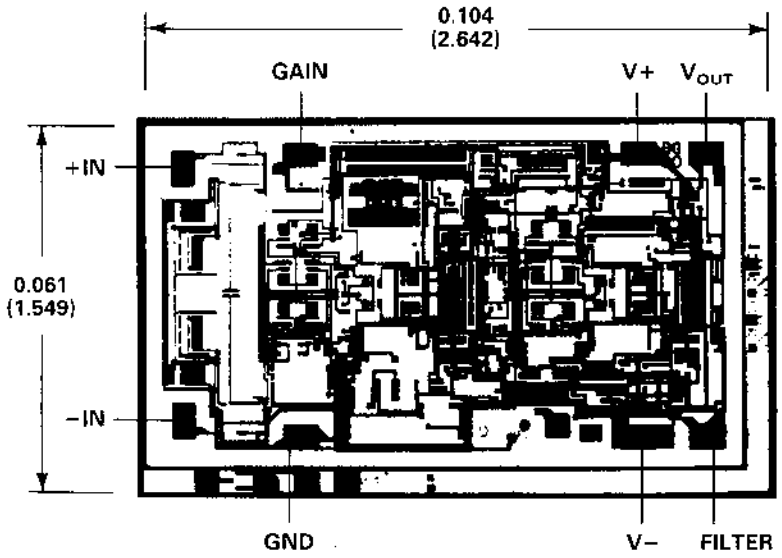

CAUTION

ESD (electrostatic discharge) sensitive device. Electrostatic charges as high as 4000 V readily accumulate on the human body and test equipment and can discharge without detection. Although the AD626 features proprietary ESD protection circuitry, permanent damage may occur on devices subjected to high energy electrostatic discharges. Therefore, proper ESD precautions are recommended to avoid performance degradation or loss of functionality.

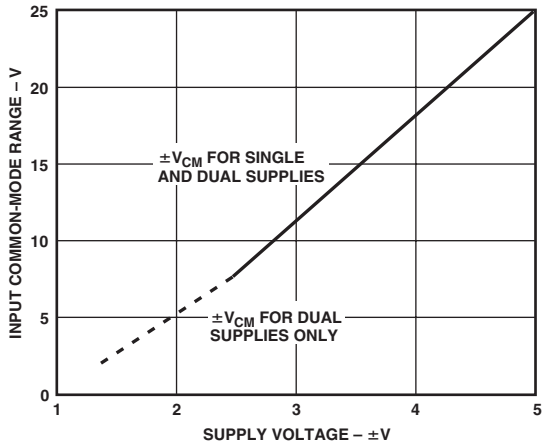

TPC 1. Input Common-Mode Range vs. Supply

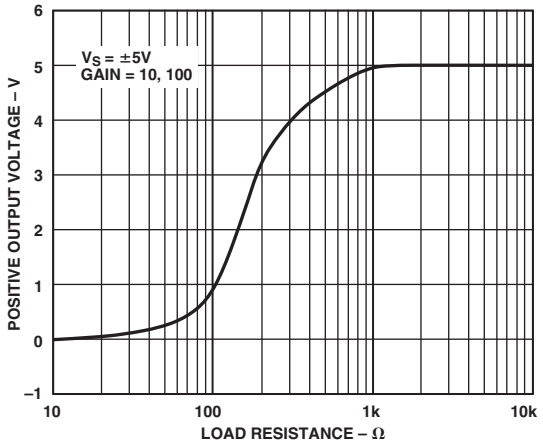

TPC 4. Positive Output Voltage Swing vs. Resistive Load

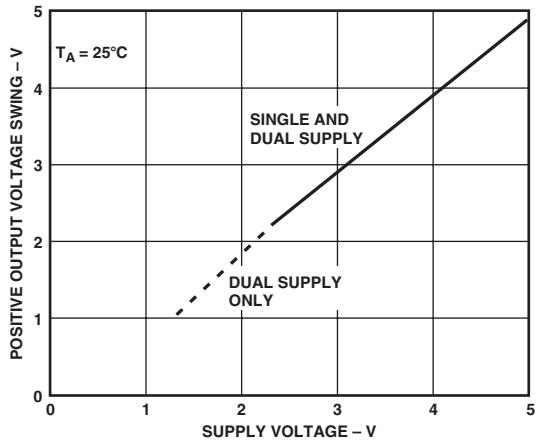

TPC 2. Positive Output Voltage Swing vs. Supply Voltage

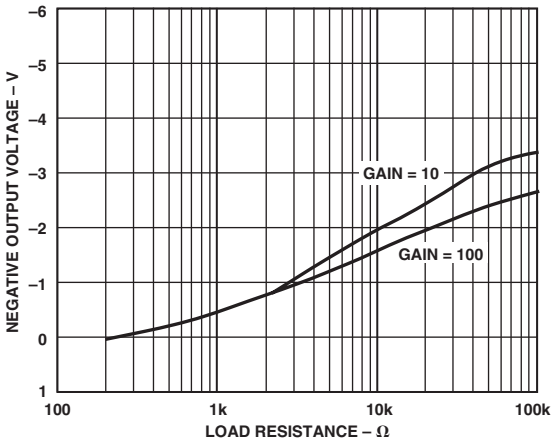

TPC 5. Negative Output Voltage Swing vs. Resistive Load

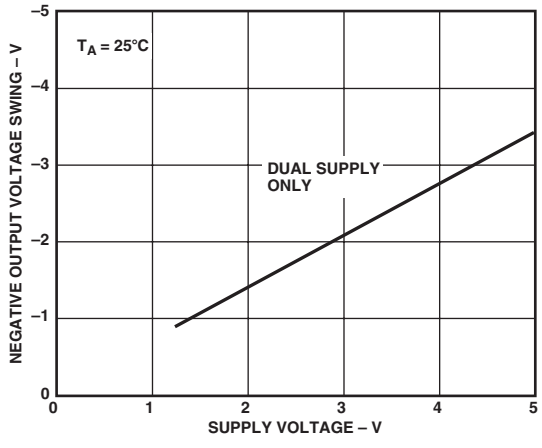

TPC 3. Negative Output Voltage Swing vs. Supply Voltage

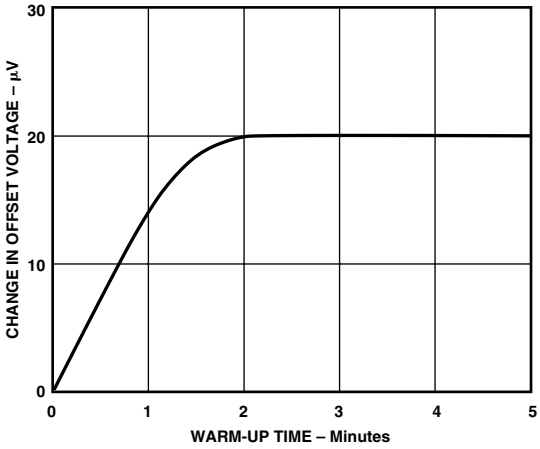

TPC 6. Change in Input Offset Voltage vs. Warm-Up Time

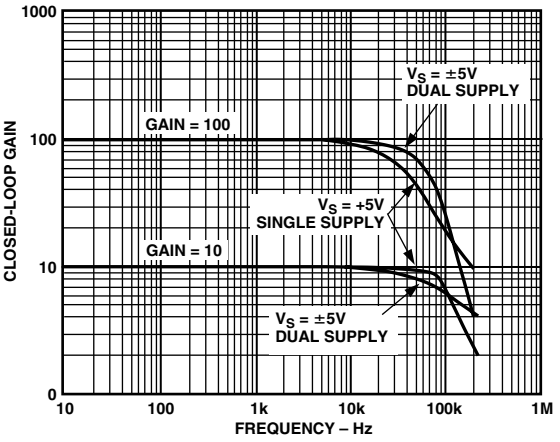

TPC 7. Closed-Loop Gain vs. Frequency

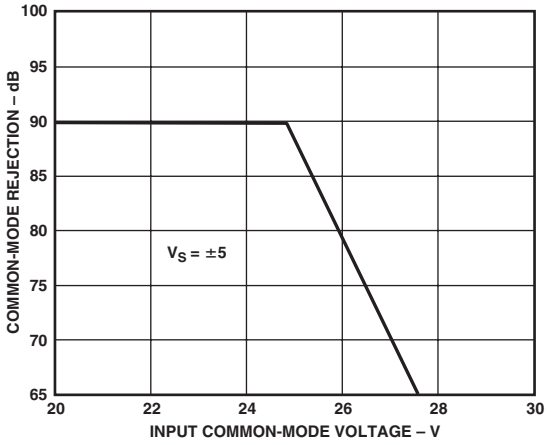

TPC 10. Common-Mode Rejection vs. Input Common-Mode Voltage for Dual-Supply Operation

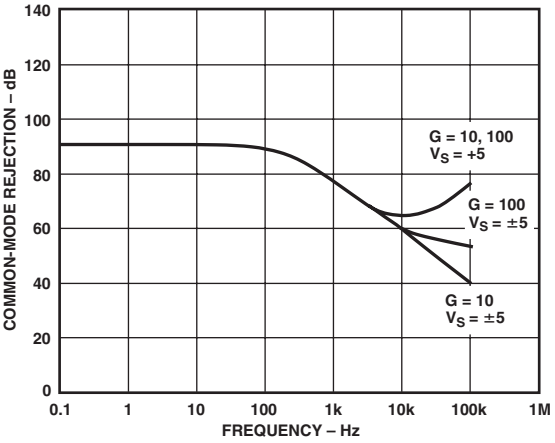

TPC 8. Common-Mode Rejection vs. Frequency

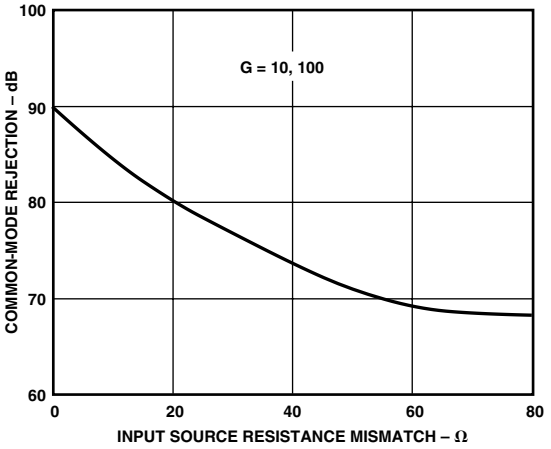

TPC 11. Common-Mode Rejection vs. Input Source Resistance Mismatch

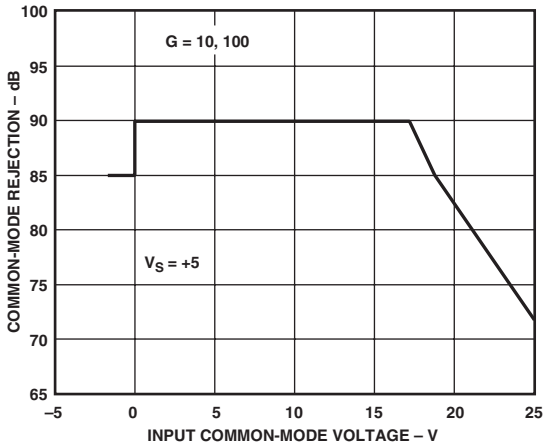

TPC 9. Common-Mode Rejection vs. Input Common-Mode Voltage for Single-Supply Operation

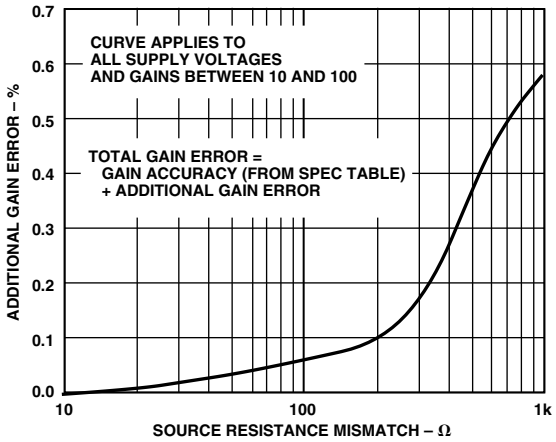

TPC 12. Additional Gain Error vs. Source Resistance Mismatch

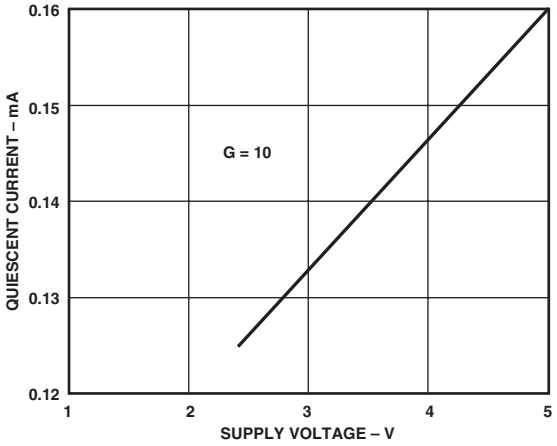

TPC 13. Quiescent Supply Current vs. Supply Voltage for Single-Supply Operation

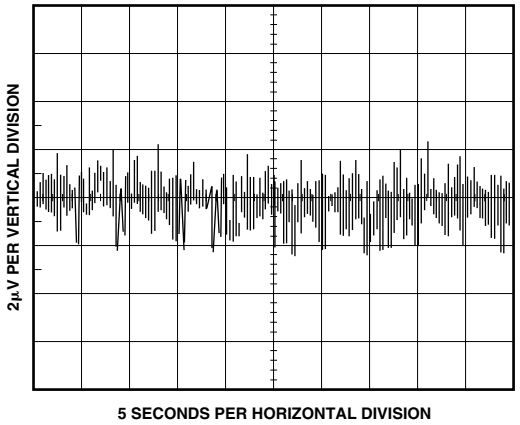

TPC 16. 0.1 Hz to 10 Hz RTI Voltage Noise. V_S = ±5 V, Gain = 100

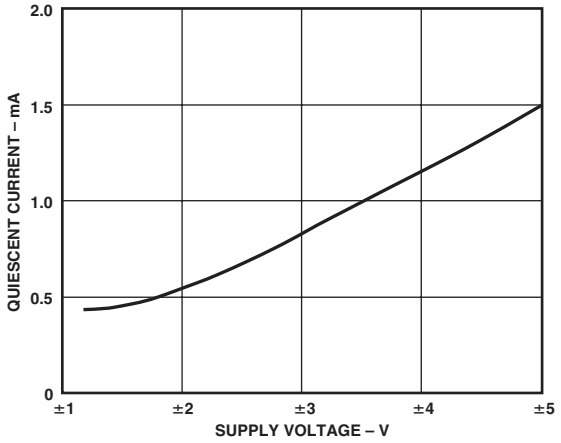

TPC 14. Quiescent Supply Current vs. Supply Voltage for Dual-Supply Operation

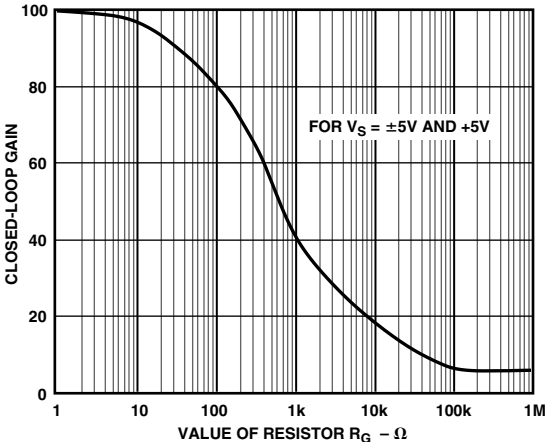

TPC 17. Closed-Loop Gain vs. R_G

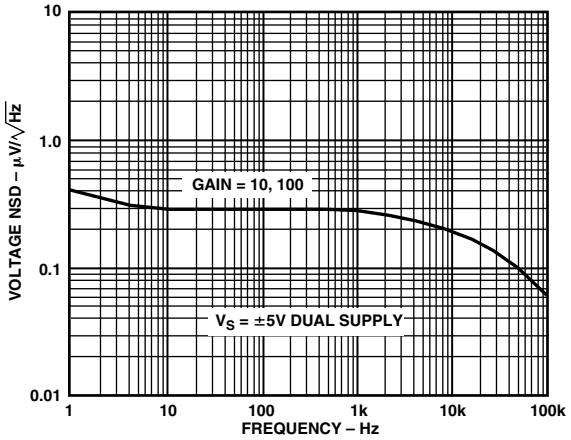

TPC 15. Noise Voltage Spectral Density vs. Frequency

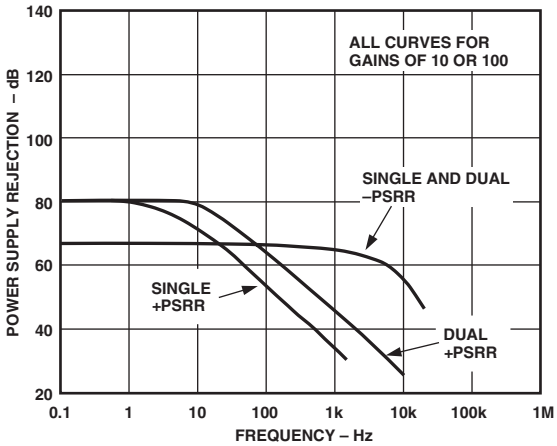

TPC 18. Power Supply Rejection vs. Frequency

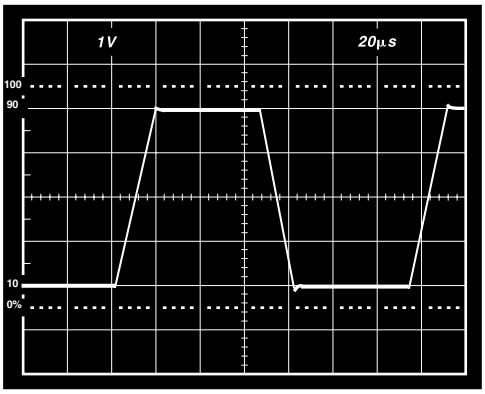

TPC 19. Large Signal Pulse Response. V_S = ±5 V, G = 10

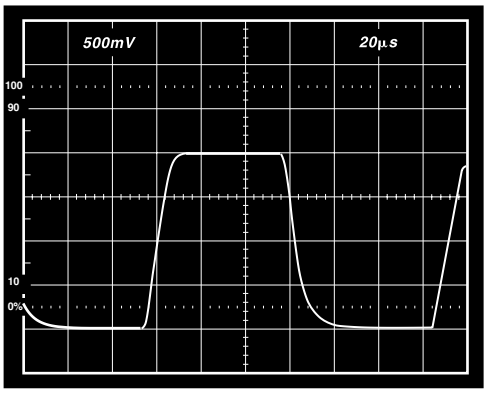

TPC 22. Large Signal Pulse Response. V_S = +5 V, G = 100

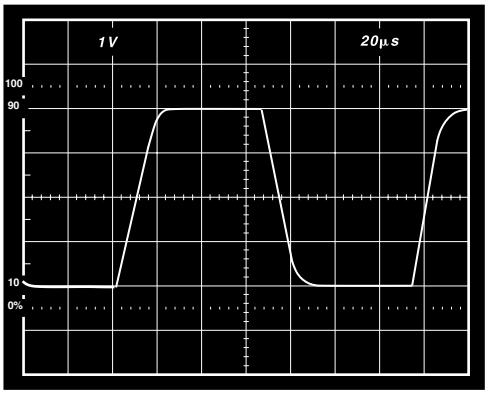

TPC 20. Large Signal Pulse Response. V_S = ±5 V, G = 100

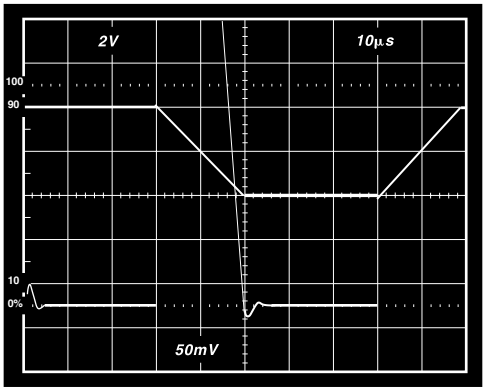

TPC 23. Settling Time. V_S = ±5 V, G = 10

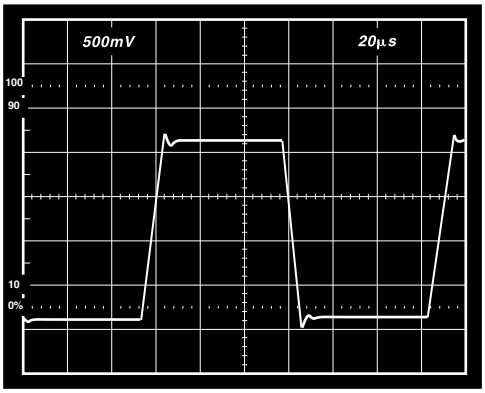

TPC 21. Large Signal Pulse Response. V_S = +5 V, G = 10

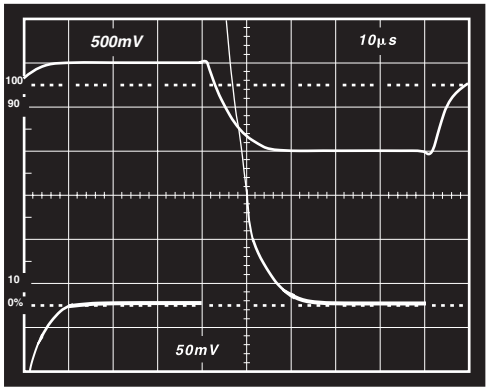

TPC 24. Settling Time. V_S = ±5 V, G = 100

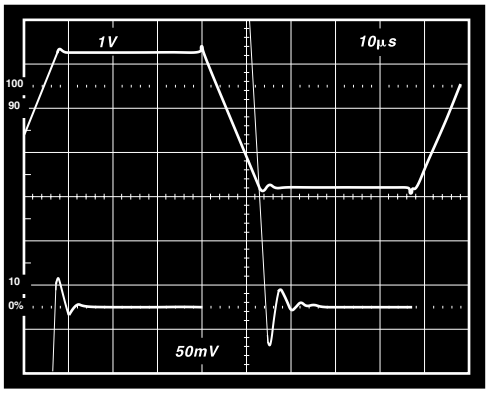

TPC 25. Settling Time. V_S = +5 V, G = 10

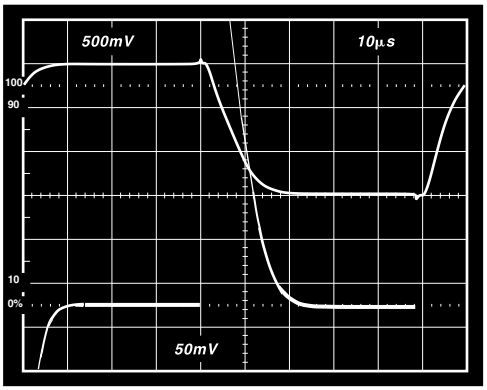

TPC 26. Settling Time. V_S = +5 V, G = 100

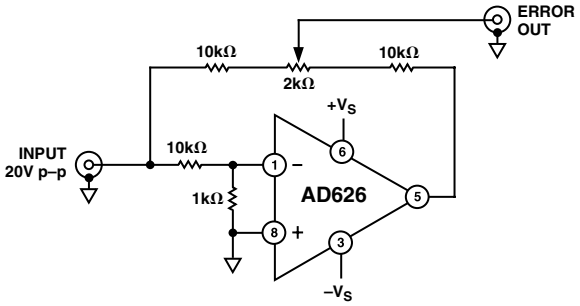

Figure 3. Settling Time Test Circuit

THEORY OF OPERATION

The AD626 is a differential amplifier consisting of a precision balanced attenuator, a very low drift preamplifier (A1), and an output buffer amplifier (A2). It has been designed so that small differential signals can be accurately amplified and filtered in the presence of large common-mode voltages (V_{CM}), without the use of any other active components.

Figure 4 shows the main elements of the AD626. The signal inputs at Pins 1 and 8 are first applied to dual resistive attenuators R1 through R4 whose purpose is to reduce the peak common-mode voltage at the input to the preamplifier—a feedback stage based on the very low drift op amp A1. This allows the differential input voltage to be accurately amplified in the presence of large common-mode voltages six times greater than that which can be tolerated by the actual input to A1. As a result, the input CMR extends to six times the quantity (V_S – 1 V). The overall common-mode error is minimized by precise laser-trimming of R3 and R4, thus giving the AD626 a common-mode rejection ratio (CMRR) of at least 10,000:1 (80 dB).

To minimize the effect of spurious RF signals at the inputs due to rectification at the input to A1, small filter capacitors C1 and C2 are included.

The output of A1 is connected to the input of A2 via a 100 kΩ (R12) resistor to facilitate the low-pass filtering of the signal of interest (see Low-Pass Filtering section).

The 200 kΩ input impedance of the AD626 requires that the source resistance driving this amplifier be low in value (<1 kΩ)—this is

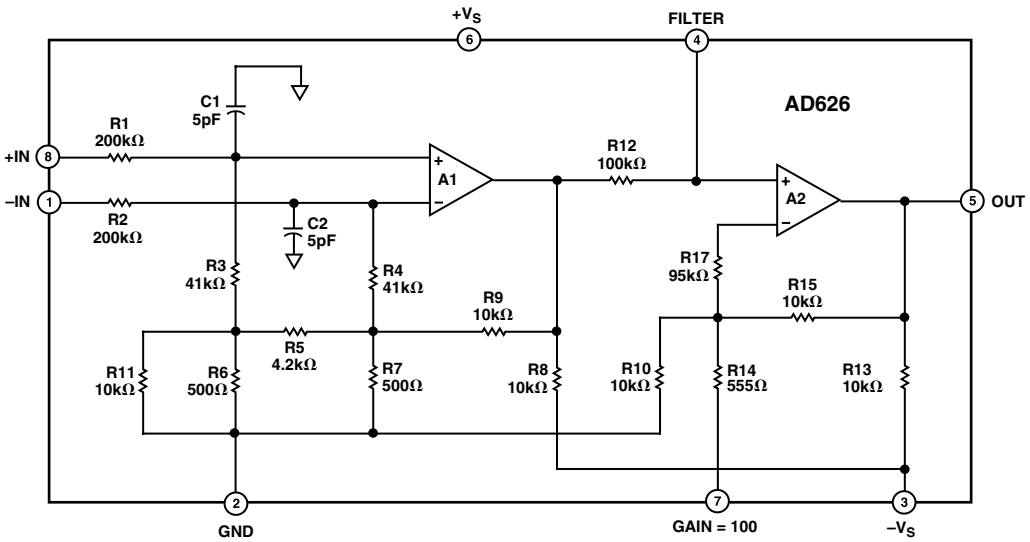

Figure 4. Simplified Schematic

necessary to minimize gain error. Also, any mismatch between the total source resistance at each input will affect gain accuracy and common-mode rejection (CMR). For example: when operating at a gain of 10, an 80 Ω mismatch in the source resistance between the inputs will degrade CMR to 68 dB.

The output buffer, A2, operates at a gain of 2 or 20, thus setting the overall, precalibrated gain of the AD626 (with no external components) at 10 or 100. The gain is set by the feedback network around amplifier A2.

The output of amplifier A2 relies on a 10 kΩ resistor to $-V_S$ for "pull-down." For single-supply operation, ($-V_S$ = "GND"), A2 can drive a 10 kΩ ground referenced load to at least +4.7 V. The minimum, nominally "zero," output voltage will be 30 mV. For dual-supply operation (±5 V), the positive output voltage swing will be the same as for a single supply. The negative swing will be to –2.5 V, at G = 100, limited by the ratio:

$$-V_S \times \frac{R15 + R14}{R13 + R14 + R15}$$

The negative range can be extended to –3.3 V (G = 100) and –4 V (G = 10) by adding an external 10 kΩ pull-down from the output to $-V_S$. This will add 0.5 mA to the AD626's quiescent current, bringing the total to 2 mA.

The AD626's 100 kHz bandwidth at G = 10 and 100 (a 10 MHz gain bandwidth) is much higher than can be obtained with low power op amps in discrete differential amplifier circuits. Furthermore, the AD626 is stable driving capacitive loads up to 50 pF (G10) or 200 pF (G100). Capacitive load drive can be increased to 200 pF (G10) by connecting a 100 Ω resistor in series with the AD626's output and the load.

ADJUSTING THE GAIN OF THE AD626

The AD626 is easily configured for gains of 10 or 100. Figure 5 shows that for a gain of 10, Pin 7 is simply left unconnected; similarly, for a gain of 100, Pin 7 is grounded, as shown in Figure 6.

Gains between 10 and 100 are easily set by connecting a variable resistance between Pin 7 and Analog GND, as shown in Figure 7. Because the on-chip resistors have an absolute tolerance of ±20% (although they are ratio matched to within 0.1%), at least a 20% adjustment range must be provided. The values shown in the table in Figure 7 provide a good trade-off between gain set range and resolution, for gains from 11 to 90.

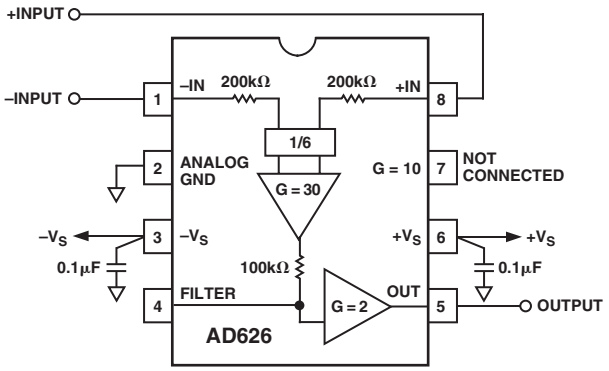

Figure 5. AD626 Configured for a Gain of 10

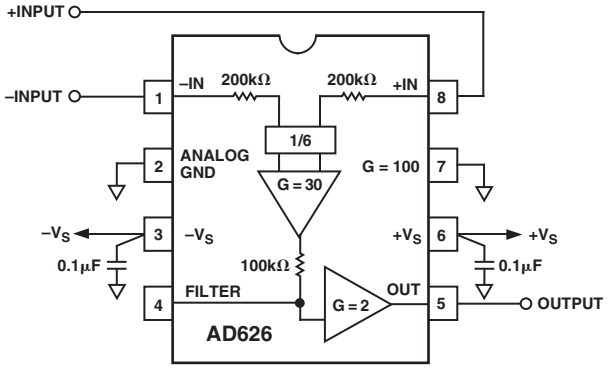

Figure 6. AD626 Configured for a Gain of 100

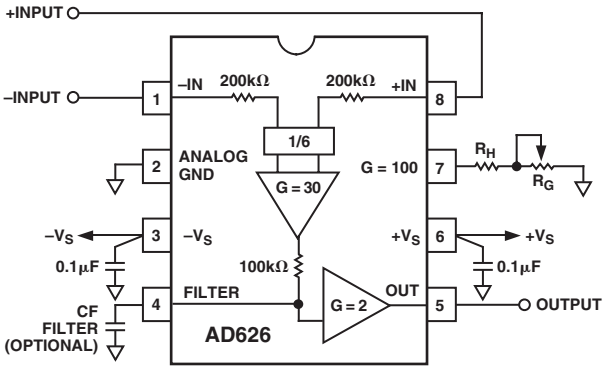

CORNER FREQUENCY OF FILTER = $\frac{1}{2\pi CF\,(100k\Omega)}$

RESISTOR VALUES FOR GAIN ADJUSTMENT

GAIN RANGE	$R_G(\Omega)$	$R_H(\Omega)$
11 – 20	100k	4.99k
20 – 40	10k	802
40 – 80	1k	80
80 – 100	100	2

Figure 7. Recommended Circuit for Gain Adjustment

SINGLE-POLE LOW-PASS FILTERING

A low-pass filter can be easily implemented by using the features provided by the AD626.

By simply connecting a capacitor between Pin 4 and ground, a single-pole low-pass filter is created, as shown in Figure 8.

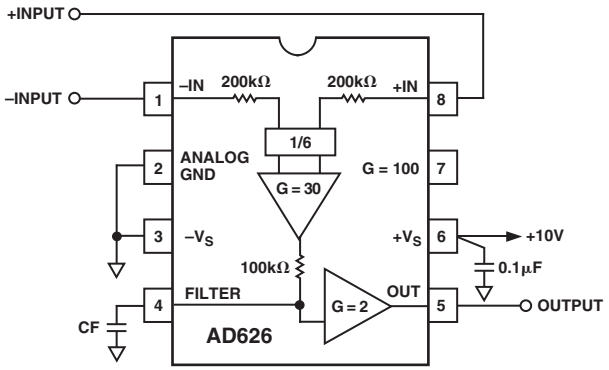

CORNER FREQUENCY OF FILTER = $\frac{1}{2\pi CF\,(100k\Omega)}$

Figure 8. A One-Pole Low-Pass Filter Circuit Which Operates from a Single +10 V Supply

CURRENT SENSOR INTERFACE

A typical current sensing application, making use of the large common-mode range of the AD626, is shown in Figure 9. The current being measured is sensed across resistor R_S. The value of R_S should be less than 1 kΩ and should be selected so that the average differential voltage across this resistor is typically 100 mV.

To produce a full-scale output of +4 V, a gain of 40 is used adjustable by ±20% to absorb the tolerance in the sense resistor. Note that there is sufficient headroom to allow at least a 10% overrange (to +4.4 V).

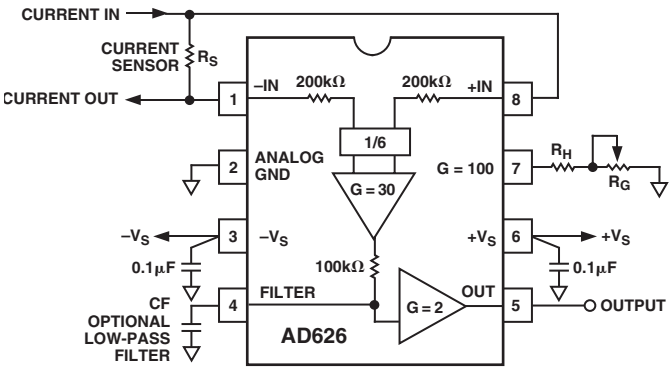

Figure 9. Current Sensor Interface

BRIDGE APPLICATION

Figure 10 shows the AD626 in a typical bridge application. Here, the AD626 is set to operate at a gain of 100, using dual-supply voltages and offering the option of low-pass filtering.

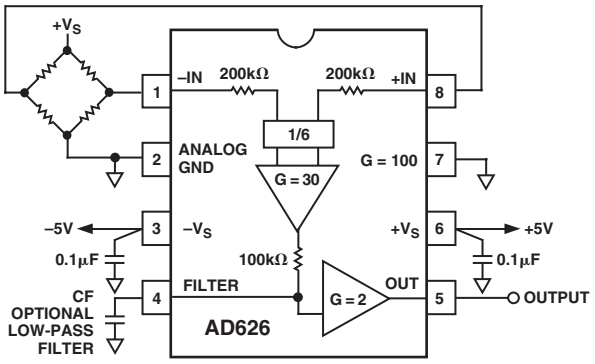

Figure 10. A Typical Bridge Application

OUTLINE DIMENSIONS

8-Lead Standard Small Outline Package [SOIC] Narrow Body (R-8)

Dimensions shown in millimeters and (inches)

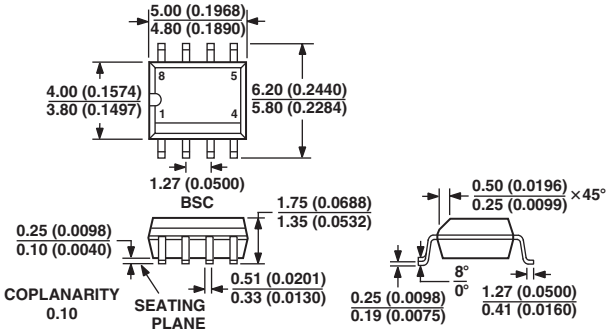

COMPLIANT TO JEDEC STANDARDS MS-012AA
CONTROLLING DIMENSIONS ARE IN MILLIMETERS; INCH DIMENSIONS (IN PARENTHESES) ARE ROUNDED-OFF MILLIMETER EQUIVALENTS FOR REFERENCE ONLY AND ARE NOT APPROPRIATE FOR USE IN DESIGN

8-Lead Plastic Dual-In Line Package [PDIP] (N-8)

Dimensions shown in inches and (millimeters)

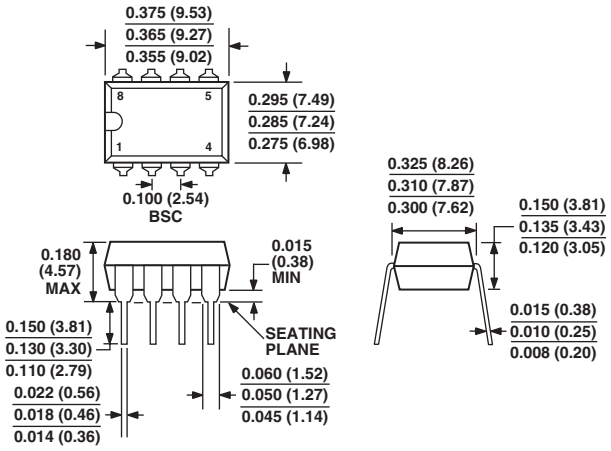

COMPLIANT TO JEDEC STANDARDS MO-095AA
CONTROLLING DIMENSIONS ARE IN INCHES; MILLIMETER DIMENSIONS (IN PARENTHESES) ARE ROUNDED-OFF INCH EQUIVALENTS FOR REFERENCE ONLY AND ARE NOT APPROPRIATE FOR USE IN DESIGN

Revision History

Location	Page
1/03—Data Sheet changed from REV. C to REV. D.	
Renumbered Figures and TPCs	Universal
Edits to Figure 1	1
Edits to SPECIFICATIONS, Output	3
Edit to ORDERING GUIDE	4
Update to standard CAUTION/ESD Warning note and diagram	4
Edits to TPC 8	6
Updated OUTLINE DIMENSIONS	12

C00781–0–1/03(D)

PRINTED IN U.S.A.

OCEAN CHIPS
Океан Электроники
Поставка электронных компонентов

Компания «Океан Электроники» предлагает заключение долгосрочных отношений при поставках импортных электронных компонентов на взаимовыгодных условиях!

Наши преимущества:

- Поставка оригинальных импортных электронных компонентов напрямую с производств Америки, Европы и Азии, а так же с крупнейших складов мира;
- Широкая линейка поставок активных и пассивных импортных электронных компонентов (более 30 млн. наименований);
- Поставка сложных, дефицитных, либо снятых с производства позиций;
- Оперативные сроки поставки под заказ (от 5 рабочих дней);
- Экспресс доставка в любую точку России;
- Помощь Конструкторского Отдела и консультации квалифицированных инженеров;
- Техническая поддержка проекта, помощь в подборе аналогов, поставка прототипов;
- Поставка электронных компонентов под контролем ВП;
- Система менеджмента качества сертифицирована по Международному стандарту ISO 9001;
- При необходимости вся продукция военного и аэрокосмического назначения проходит испытания и сертификацию в лаборатории (по согласованию с заказчиком);
- Поставка специализированных компонентов военного и аэрокосмического уровня качества (Xilinx, Altera, Analog Devices, Intersil, Interpoint, Microsemi, Actel, Aeroflex, Peregrine, VPT, Syfer, Eurofarad, Texas Instruments, MS Kennedy, Miteq, Cobham, E2V, MA-COM, Hittite, Mini-Circuits, General Dynamics и др.);

Компания «Океан Электроники» является официальным дистрибьютором и эксклюзивным представителем в России одного из крупнейших производителей разъемов военного и аэрокосмического назначения **«JONHON»**, а так же официальным дистрибьютором и эксклюзивным представителем в России производителя высокотехнологичных и надежных решений для передачи СВЧ сигналов **«FORSTAR»**.

AVIC JONHON

«JONHON» (основан в 1970 г.)

Разъемы специального, военного и аэрокосмического назначения:

(Применяются в военной, авиационной, аэрокосмической, морской, железнодорожной, горно- и нефтедобывающей отраслях промышленности)

«FORSTAR» (основан в 1998 г.)

ВЧ соединители, коаксиальные кабели, кабельные сборки и микроволновые компоненты:

(Применяются в телекоммуникациях гражданского и специального назначения, в средствах связи, РЛС, а так же военной, авиационной и аэрокосмической отраслях промышленности).

FORSTAR®

Телефон: 8 (812) 309-75-97 (многоканальный)
Факс: 8 (812) 320-03-32
Электронная почта: ocean@oceanchips.ru
Web: http://oceanchips.ru/
Адрес: 198099, г. Санкт-Петербург, ул. Калинина, д. 2, корп. 4, лит. А