Atmel AT42QT1110-MU
AT42QT1110-AU

11-key QTouch® Touch Sensor IC

DATASHEET

Features

- Sensor Keys:
  - Up to 11 QTouch® channels
- Data Acquisition:
  - Measurement of keys triggered either by a signal applied to the SYNC pin or at regular intervals timed by the AT42QT1110 internal clock
  - Keys measured sequentially for better performance, or in parallel groups for faster operation
  - Raw data for key touches can be read as a report over the SPI interface
- Discrete Outputs:
  - Configurable “Detect” outputs indicating individual key touch (7-key mode)
- Device Setup:
  - Device configuration can be stored in EEPROM
- Technology:
  - Patented spread-spectrum charge-transfer (direct mode)
- Key Outline Sizes:
  - 6 mm × 6 mm or larger (panel thickness dependent); widely different sizes and shapes possible, including solid or ring shapes
- Key Spacings:
  - 7 mm center-to-center or more (panel thickness dependent)
- Layers Required:
  - One
- Electrode Materials:
  - Etched copper, silver, carbon, Indium Tin Oxide (ITO)
- Electrode Substrates:
  - PCB, FPCB, plastic films, glass
- Panel Materials:
  - Plastic, glass, composites, painted surfaces (low particle density metallic paints possible)
- Panel Thickness:
  - Up to 10 mm glass, 5 mm plastic (electrode size dependent)
- Key Sensitivity:
  - Individually settable via simple commands over serial interface
- Adjacent Key Suppression® (AKS®)
  - Patented AKS technology to enable accurate key detection
- Interface:
  - Full-duplex SPI slave mode (1.5 MHz), CHANGE pin, discrete detection outputs
- Moisture Tolerance
  - Increased moisture tolerance based on hardware design and firmware tuning
- Power:
  - 3 V – 5.5 V
- Package:
  - 32-pin 5 × 5 mm QFN RoHS compliant
  - 32-pin 7 × 7 mm TQFP RoHS compliant
- Signal Processing:
  - Self-calibration, auto drift compensation, noise filtering, AKS technology
- Applications:
  - Consumer and industrial applications, such as TV, media player

1. Pinout and Schematic

1.1 Pinout Configuration

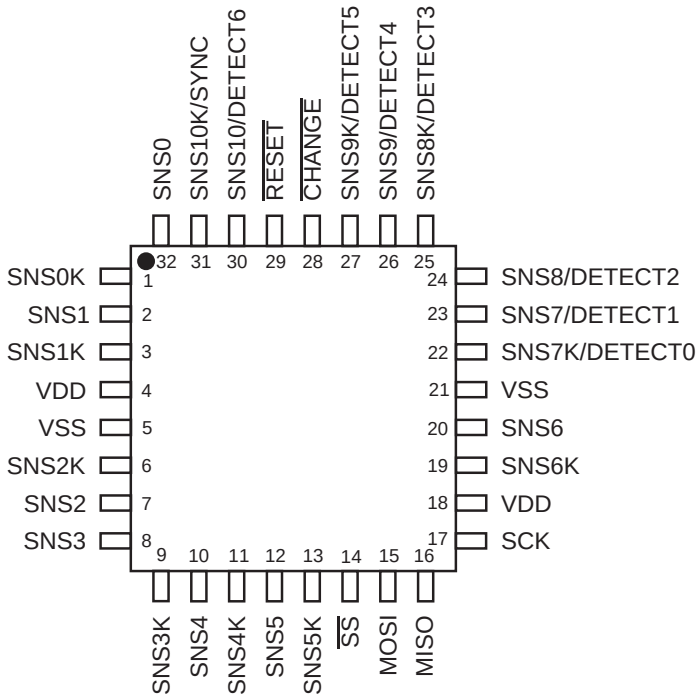

1.2 Pin Descriptions

Table 1-1. Pin Listing

Pin	Name	Type	Comments	If Unused, Connect To...
1	SNS0K	I/O	Sense Pin	Leave open
2	SNS1	I/O	Sense Pin	Leave open
3	SNS1K	I/O	Sense Pin	Leave open
4	Vdd	P	Power	–
5	Vss	P	Supply Ground	–
6	SNS2K	I/O	Sense Pin	Leave open
7	SNS2	I/O	Sense Pin	Leave open
8	SNS3	I/O	Sense Pin	Leave open
9	SNS3K	I/O	Sense Pin	Leave open
10	SNS4	I/O	Sense Pin	Leave open
11	SNS4K	I/O	Sense Pin	Leave open

Table 1-1. Pin Listing (Continued)

Pin	Name	Type	Comments	If Unused, Connect To...
12	SNS5	I/O	Sense Pin	Leave open
13	SNS5K	I/O	Sense Pin	Leave open
14	$\overline{SS}$	I	Enable SPI	Vss via 100 kΩ resistor to enable SPI Vdd via 100 kΩ resistor to disable SPI
15	MOSI	I	SPI Data In	Leave open
16	MISO	O	SPI Data Out	Leave open
17	SCK	I	SPI Clock	Leave open
18	Vdd	P	Power	–
19	SNS6K	I/O	Sense Pin	Leave open
20	SNS6	I/O	Sense Pin	Leave open
21	Vss	P	Supply Ground	–
22	SNS7K/DETECT0	I/O	Sense Pin/Key Status Indicator	Leave open
23	SNS7/DETECT1	I/O	Sense Pin/Key Status Indicator	Leave open
24	SNS8/DETECT2	I/O	Sense Pin / Key Status Indicator	Leave open
25	SNS8K/DETECT3	I/O	Sense Pin / Key Status Indicator	Leave open
26	SNS9/DETECT4	I/O	Sense Pin / Key Status Indicator	Leave open
27	SNS9K/DETECT5	I/O	Sense Pin / Key Status Indicator	Leave open
28	$\overline{CHANGE}$	OD	Touch Event Indicator	Leave open
29	$\overline{RESET}$	I	Reset	Vdd
30	SNS10/DETECT6	I/O	Sense Pin / Key Status Indicator	Leave open
31	SNS10K/SYNC	I/O	Sense Pin / Synchronization Input	Vdd or Vss via 100 kΩ resistor
32	SNS0	I/O	Sense Pin	Leave open

I	Input only	I/O	Input and output		
O	Output only, push-pull	OD	Open drain output	P	Ground or power

1.3 Schematics

Figure 1-1. Typical Circuit: 7 keys With Detect Outputs and No External Trigger

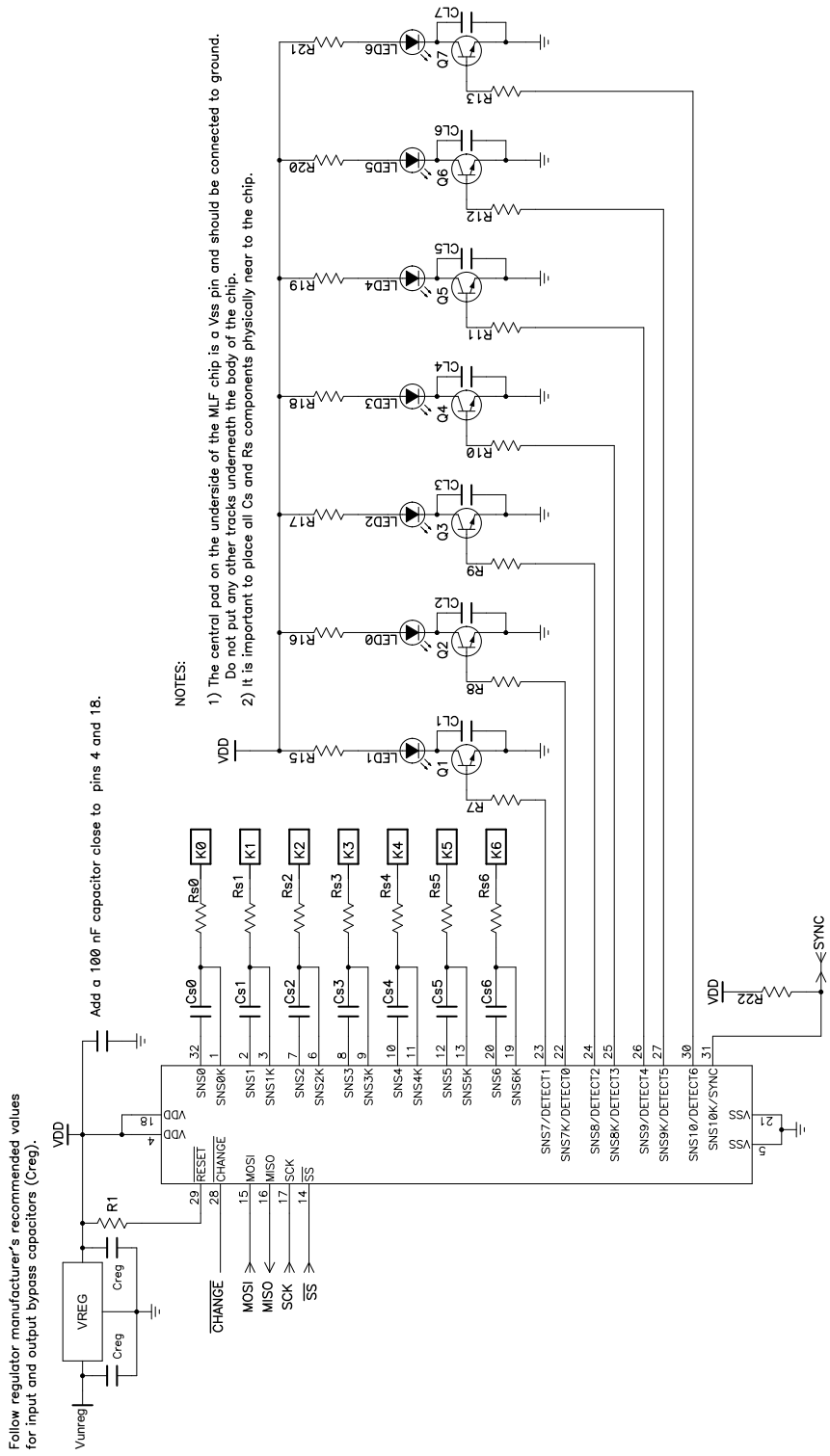

Figure 1-2. Typical Circuit: 11 Keys With No External Trigger

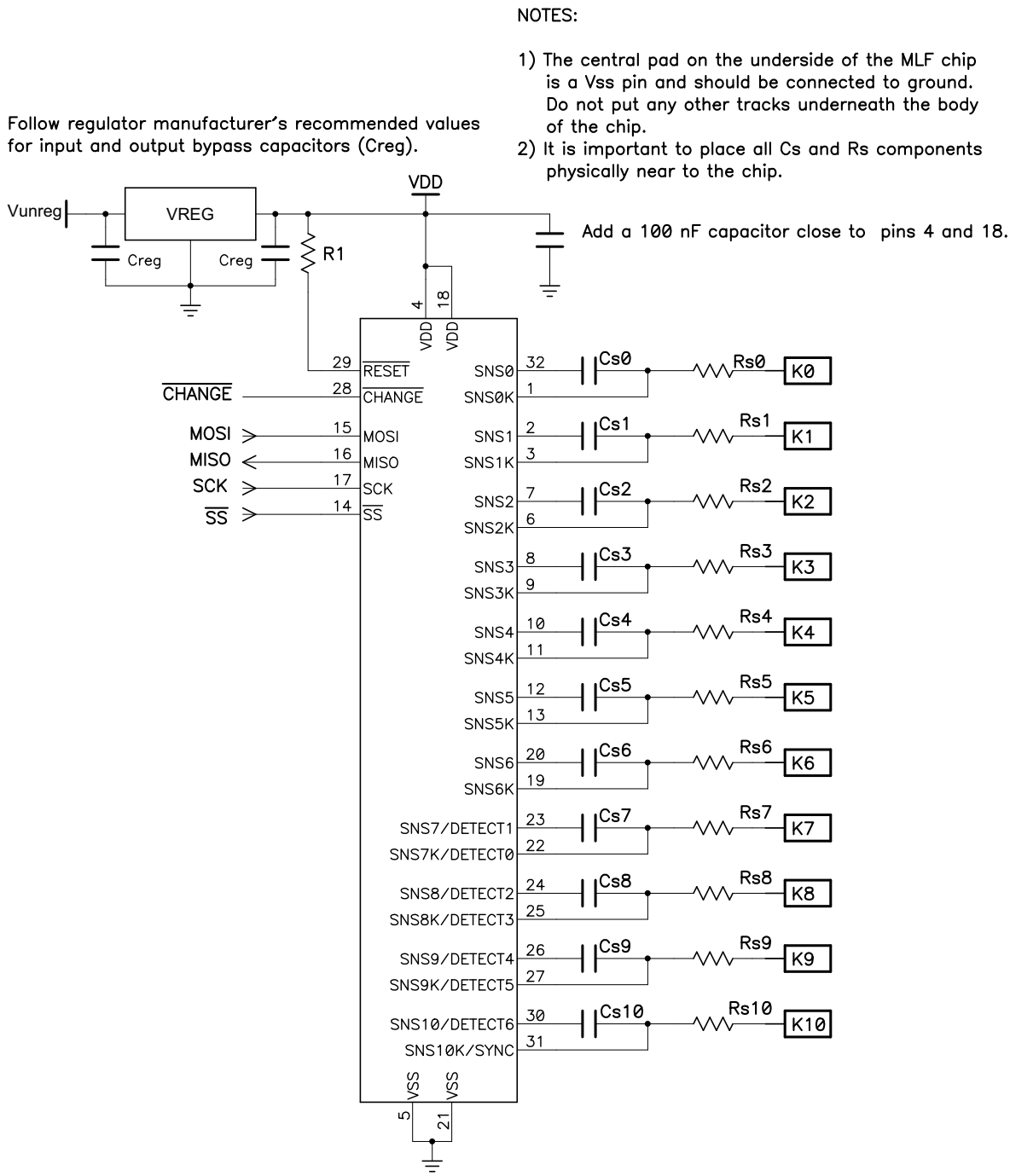

Figure 1-3. Typical Circuit: 10 Keys With External Trigger (SYNC Mode)

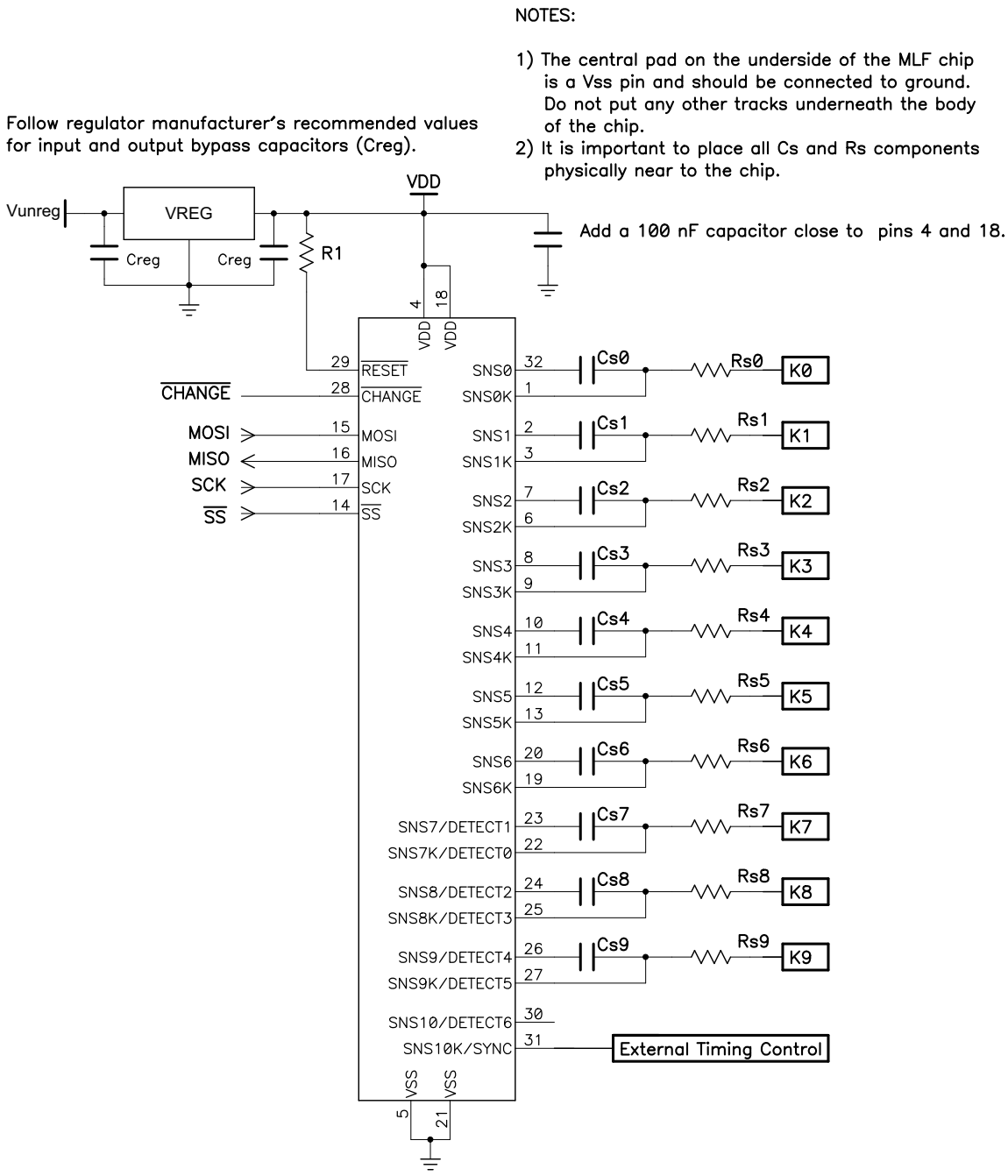

For component values in Figure 1-1, Figure 1-2 and Figure 1-3, check the following sections:

- Section 3.1 on page 8: Cs capacitors (Cs0 – Cs10)
- Section 3.2 on page 8: Sample resistors (Rs0 – Rs10)
- Section 3.5 on page 9: Voltage levels
- Section 3.3 on page 8: LED traces

2. Overview of the AT42QT1110

2.1 Introduction

The AT42QT1110 (QT1110) is a digital burst mode charge-transfer (QT™) capacitive sensor driver designed for any touch-key applications.

The keys can be constructed in different shapes and sizes. Refer to the *Touch Sensors Design Guide* and Application Note QTAN0002, *Secrets of a Successful QTouch Design*, for more information on construction and design methods (both downloadable from the Atmel website).

The device includes all signal processing functions necessary to provide stable sensing under a wide variety of changing conditions, and the outputs are fully debounced. Only a few external parts are required for operation.

The QT1110 modulates its bursts in a spread-spectrum fashion in order to suppress heavily the effects of external noise, and to suppress RF emissions.

2.2 Configurations

The QT1110 is designed as a versatile device, capable of various configurations. There are two basic configurations for the QT1110:

- 11-key QTouch. The device can sense up to 11 keys.
- 7-key QTouch with individual outputs for each key. The device can sense up to 7 keys and drive the matching Detect outputs to a user-configurable PWM.

Both configurations allow for a choice of acquisition modes, thus providing a variety of possibilities that will satisfy most applications (see the following sections for more information).

Additionally, the SYNC line can be used as an external trigger input. Note that in 11-key mode the SYNC line replaces one key, thus allowing only 10 keys.

See Section 4.7 on page 18 for more information.

2.3 Guard Channel

The device has a guard channel option (available in all key modes), which allows one key to be configured as a guard channel to help prevent false detection. See Section 4.9 on page 19 for more information.

2.4 Self-test Functions

The QT1110 has two types of self-test functions:

- Internal Hardware tests – check for hardware failures in the device internal memory.
- Functional checks – confirm that the device is operating within expected parameters.

See Section 4.10 on page 20 for more information.

2.5 Moisture Tolerance

The presence of water (condensation, sweat, spilt water, and so on) on a sensor can alter the signal values measured and thereby affect the performance of any capacitive device. The moisture tolerance of QTouch devices can be improved by designing the hardware and fine-tuning the firmware following the recommendations in the application note Atmel *AVR3002: Moisture Tolerant QTouch Design* (www.atmel.com/Images/doc42017.pdf).

3. Wiring and Parts

3.1 Cs Sample Capacitors

Cs0 – Cs10 are the charge sensing sample capacitors. Normally they are identical in nominal value. The optimal Cs values depend on the thickness of the panel and its dielectric constant. Thicker panels require larger values of Cs. Values can be in the range 2.2 nF (for faster operation) to 33 nF (for best sensitivity); typical values are 4.7 nF to 10 nF.

The value of Cs should be chosen so that a light touch on a key produces a reduction of ~20 to 30 in the key signal value (see Section 6.8 on page 26). The chosen Cs value should never be so large that the key signals exceed ~1000, as reported by the chip in the debug data.

The Cs capacitors must be X7R or PPS film type, for stability. For consistent sensitivity, they should have a 10 percent tolerance. Twenty percent tolerance may cause small differences in sensitivity from key to key and unit to unit. If a key is not used, the Cs capacitor may be omitted.

3.2 Rs Resistors

The series resistors Rs0 – Rs10 are inline with the electrode connections and should be used to limit electrostatic discharge (ESD) currents and to suppress radio frequency (RF) interference. Values should be approximately 2 kΩ to 20 kΩ each; a typical value is 4.7 kΩ.

Although these resistors may be omitted, the device may become susceptible to external noise or radio frequency interference (RFI). For details of how to select these resistors see the Application Note QTAN0002, *Secrets of a Successful QTouch Design*, downloadable from the Touch Technology area of the Atmel website, www.atmel.com.

3.3 LED Traces and Other Switching Signals

Digital switching signals near the sense lines can induce transients into the acquired signals, deteriorating the SNR performance of the device. Such signals should be routed away from the sensing traces and electrodes, or the design should be such that these lines are not switched during the course of signal acquisition (bursts).

LED terminals which are multiplexed or switched into a floating state, and which are within, or physically very near, a key (even if on another nearby PCB) should be bypassed to either Vss or Vdd with at least a 1 nF capacitor. This is to suppress capacitive coupling effects which can induce false signal shifts. The bypass capacitor does not need to be next to the LED, in fact it can be quite distant. The bypass capacitor is noncritical and can be of any type.

LED terminals which are constantly connected to Vss or Vdd do not need further bypassing.

3.4 PCB Cleanliness

Modern no-clean flux is generally compatible with capacitive sensing circuits.

CAUTION: If a PCB is reworked to correct soldering faults relating to the QT1110, or to any associated traces or components, be sure that you fully understand the nature of the flux used during the rework process. Leakage currents from hygroscopic ionic residues can stop capacitive sensors from functioning. If you have any doubts, a thorough cleaning after rework may be the only safe option.

3.5 Power Supply

3.5.1 General Considerations

See Section 8.2 on page 38 for the power supply range. If the power supply fluctuates slowly with temperature, the device tracks and compensates for these changes automatically with only minor changes in sensitivity. If the supply voltage drifts or shifts quickly, the drift compensation mechanism is not able to keep up, causing sensitivity anomalies or false detections.

The usual power supply considerations with QT parts apply to the device. The power should be clean and come from a separate regulator if possible. However, this device is designed to minimize the effects of unstable power, and, except in extreme conditions, should not require a separate Low Dropout (LDO) regulator.

See underneath Figure 1.3 on page 4 for suggested regulator manufacturers.

⚠	**Caution:** A regulator IC shared with other logic can result in erratic operation and is **not** advised. A single ceramic 0.1 µF bypass capacitor, with short traces, should be placed very close to the power pins of the IC. Failure to do so can result in device oscillation, high current consumption, or erratic operation.

It is assumed that a larger bypass capacitor (like1 µF) is somewhere else in the power circuit; for example, near the regulator.

3.5.2 Brownout Detection

The QT1110 includes a power supply monitoring circuit that detects if Vdd drops below a safe operating voltage. When this occurs, the device goes into a *Reset* state, where no acquisition or processing is carried out. The device remains in this state until Vdd returns to the specified voltage range.

Once a safe operating voltage is detected, the QT1110 behaves as per normal power-on/reset conditions; that is, any saved settings are restored from EEPROM, the internal self-tests are run and all channels are calibrated.

The Brown-out detector threshold is 2.7 V ±10%.

3.6 QFN Package Restrictions

The central pad on the underside of the QFN chip should be connected to ground. Do not run any tracks underneath the body of the chip, only ground. Figure 3-1 shows examples of good and bad tracking.

Figure 3-1. Examples of Good and Bad Tracking

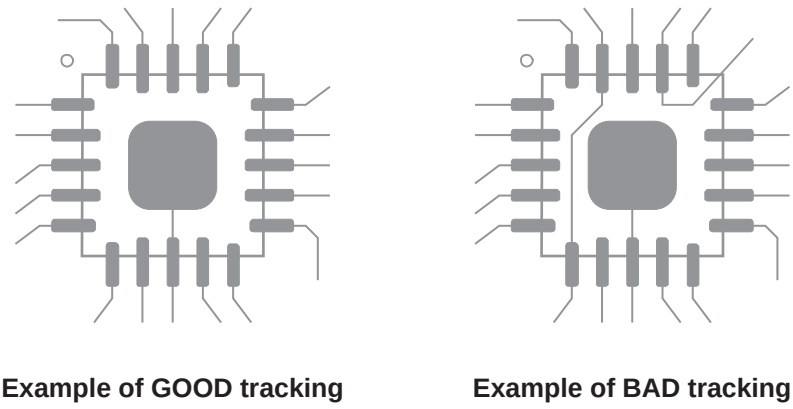

4. Detailed Operations

4.1 Communications

4.1.1 Introduction

All communication with the device is carried out over the Serial Peripheral Interface (SPI). This is a synchronous serial data link that operates in full-duplex mode. The host communicates with the QT controller over the SPI using a master-slave relationship, with the QT1110 acting in slave mode.

4.1.2 SPI Operation

The SPI uses four logic signals:

- Serial Clock (SCK) – output from the host.
- Master Output, Slave Input (MOSI) – output from the host, input to the QT controller. Used by the host to send data to the QT controller.
- Master Input, Slave Output (MISO) – input to the host, output from the QT controller. Used by the QT device to send data to the host.
- Slave Select ($\overline{SS}$) – active low output from the host.

At each byte, the master pulls $\overline{SS}$ low and generates 8 clock pulses on SCK. With these 8 clock pulses, a byte of data is transmitted from the master to the slave over MOSI, most significant bit (msb) first.

Simultaneously a byte of data is transmitted from the slave to the master over MISO, also most significant bit first.

The slave reads the status of MOSI at the leading edge of each clock pulse, and the master reads the slave data from MISO at the trailing edge.

The QT1110 requires that the clock idles “high”, meaning that the data on MOSI and MISO pins are set at the falling edges and sampled at the rising edges.

That is:

Clock polarity CPOL = 1
Clock phase CPHA = 1

The QT1110 SPI interface can operate at any SCK frequency up to 1.5 MHz.

In multibyte communications, the master must pause for a minimum delay of 150 µs between the completion of one byte exchange and the beginning of the next.

Note that the number of bytes to be transmitted depends on the initial command sent by the host. This sets the mode on the QT1110 so that the QT1110 knows how to respond to, or how to interpret, the following bytes. If there is a delay of >100 ms between bytes while the QT1110 is waiting for data, or waiting to send data, then the incomplete transmission is discarded and the device resets its SPI state machine. It will then interpret the next byte it receives as a fresh command.

When the QT1110 SPI interface is receiving a new command, it returns the *Idle* status code (`0x55`) on MISO during the first byte exchange to indicate to the master that it is in the correct state for receiving instructions.

4.1.3 CRC Bytes

If enabled, a CRC checking procedure is implemented on all communications between the SPI master and the QT1110. In this case, each command or report request sent by the master must have a byte appended containing the CRC checksum of the data sent. The QT1110 will not respond to commands until the CRC byte has been received and verified.

Sample C code showing the algorithm for calculating the CRC of the data can be found in Appendix A..

When the QT1110 is expecting a CRC byte, it returns (on MISO) the calculated CRC byte which it expects to receive. This is sent simultaneously with the QT1110 receiving the CRC byte from the master (that is, during the same byte exchange). This allows both devices to confirm that the data was sent correctly.

All data returned by the QT1110 is also be followed by a CRC byte, allowing the master to confirm the integrity of the data transmission.

4.1.4 SPI Commands

There are three types of communication between the SPI master and the QT1110:

- Control commands (see Section 5. on page 22)
  - To send control instructions to the QT1110
- Report requests (see Section 6. on page 24)
  - To reading status information from the QT1110
- Setup commands (see Section 7. on page 28)
  - To set configuration options (“Set” instructions)
  - To read configuration options (“Get” instructions)

Additionally the NULL command (`0x00`) is transmitted by the host device as it is receiving data from the QT1110.

4.1.4.1 Control Commands

A control command is an instruction sent to the QT1110 that controls operations of the device, and for which no response is required. Examples of control commands are: *Reset*, *Calibrate*, *Send Setups*.

With the exception of *Send Setups*, control commands normally require a single byte exchange, unless CRC checking is enabled, in which case a second byte must be transmitted by the host with the calculated CRC of the command byte.

Figure 4-1. Sleep Command – CRC Disabled

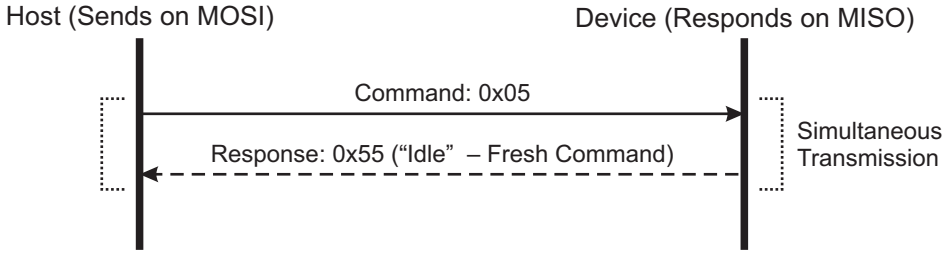

Figure 4-2. Sleep Command – CRC Enabled

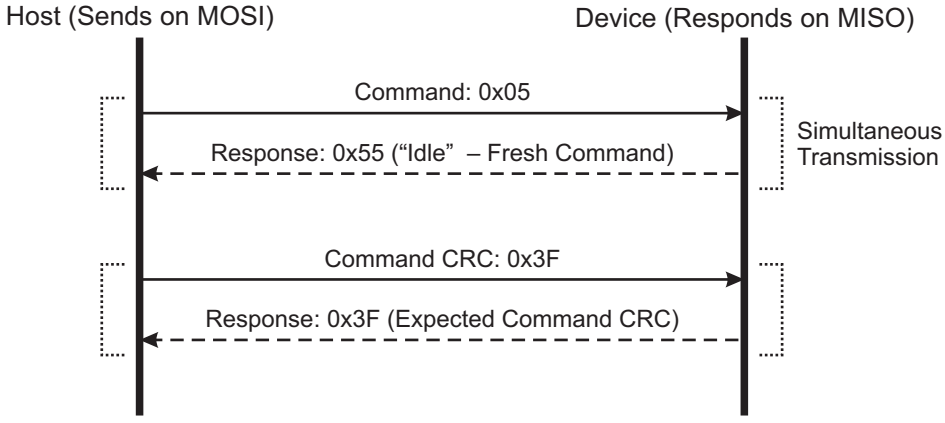

When the *Send Setups* command is received, the QT1110 stops measurement of QTouch sensors and waits for 42 bytes of data to be sent. Only when all 42 bytes have been received (and the CRC byte, if CRC is enabled), the QT1110 applies all the settings to RAM and resumes measurement. In this case, if CRC is enabled, the CRC byte is calculated for all the data sent by the host, including the command byte `0x01`.

Control Commands are specified in detail in Section 5. on page 22.

4.1.5 Report Requests

Report Requests are sent by the Host to instruct the QT1110 to return status information. The host sends the appropriate *Report Request* command, then transmits Null bytes on MOSI while the QT1110 returns the report data on MISO.

Figure 4-3. All Keys Report – CRC Disabled

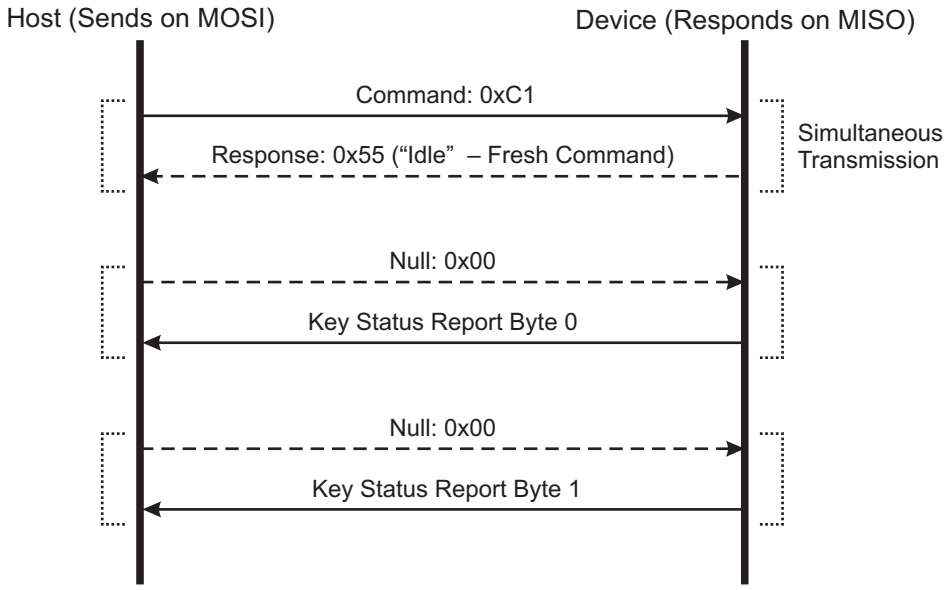

For example, Figure 4-3 on page 12 shows the exchange that takes place to read the 2-byte *All Keys* report. In this exchange, the host sends:

`0xC1` — `0x00` — `0x00`

and the QT1110 returns (simultaneously):

`0x55` — Report Byte 0 — Report Byte 1

If CRC is enabled, this exchange is extended to 5 bytes, as shown in Figure 4-4.

Figure 4-4. All Keys Report – CRC Enabled

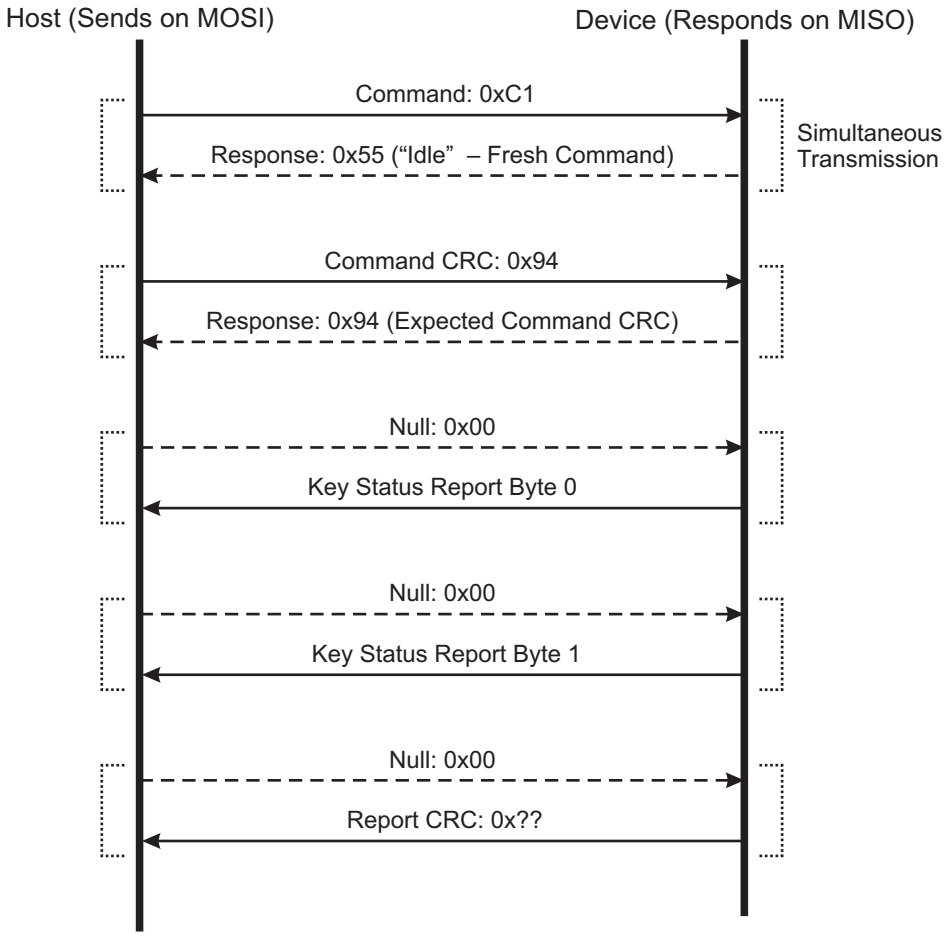

4.1.5.1 Set Instructions

Set Instructions are 2-byte transmissions by the host that are used to send settings to individual locations in the device memory map.

At the first byte, the QT1110 returns `0x55` (*Idle*) to confirm that it will interpret the byte as a new command. At the second byte, the QT1110 returns the *Set* command it has just received.

For example, to set the *Positive Recalibration Delay* to 1920 ms, address 5 in the memory map is set to 12 (`0x0C`). This is done with the *Set* command for address 5 (command code `0x95`), as shown in Figure 4-5 on page 14.

Figure 4-5. Positive Recalibration Delay Set Instruction – CRC Disabled

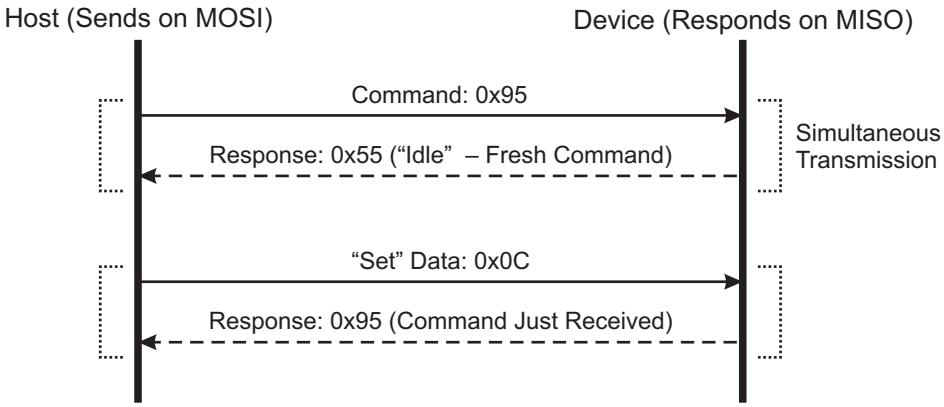

With CRC Enabled, a CRC byte is also required (Figure 4-6). This is calculated for the two transmitted bytes (that is, the *Set* command and the data byte).

For example, for the sequence shown in Figure 4-5 (`0x95` – `0x0C`), the CRC Byte is `0x9F`. As is the case with the other command types, when the QT1110 is expecting a CRC byte from the host, it calculates that byte in advance and returns the expected value to the host in the same transmission as the host sends the CRC byte.

The sent data is not applied to the memory location until the CRC byte has been received and verified.

Figure 4-6. Positive Recalibration Delay Set Instruction – CRC Enabled

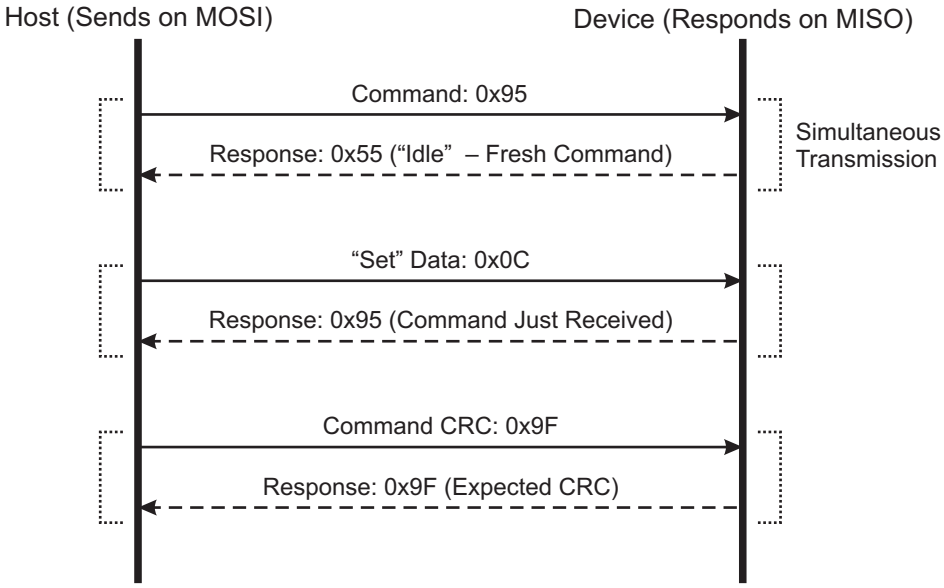

4.1.5.2 Get Instructions

Get instructions are instructions that read the data from a location in the QT1110 memory map.

Figure 4-7. Positive Recalibration Delay Get Instruction – CRC Disabled

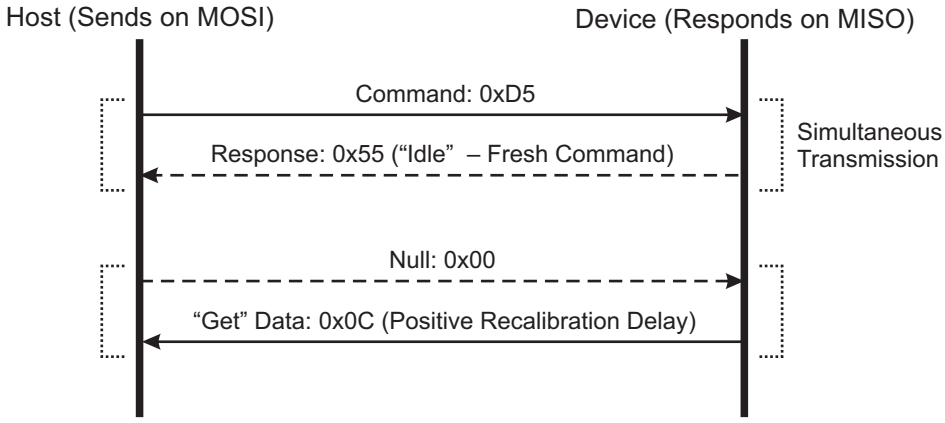

The host sends the appropriate *Get* command, followed by a *Null* byte. The QT1110 returns the contents of the addressed memory location.

Figure 4-7 on page 15 shows the exchange for a report on the positive recalibration delay (assuming that the data byte is `0x0C`).

With CRC Enabled, this exchange takes 4 bytes, with a command CRC transmitted by the host and a report CRC returned by the QT1110 (see Figure 4-8).

Figure 4-8. Positive Recalibration Delay Get Instruction – CRC Enabled

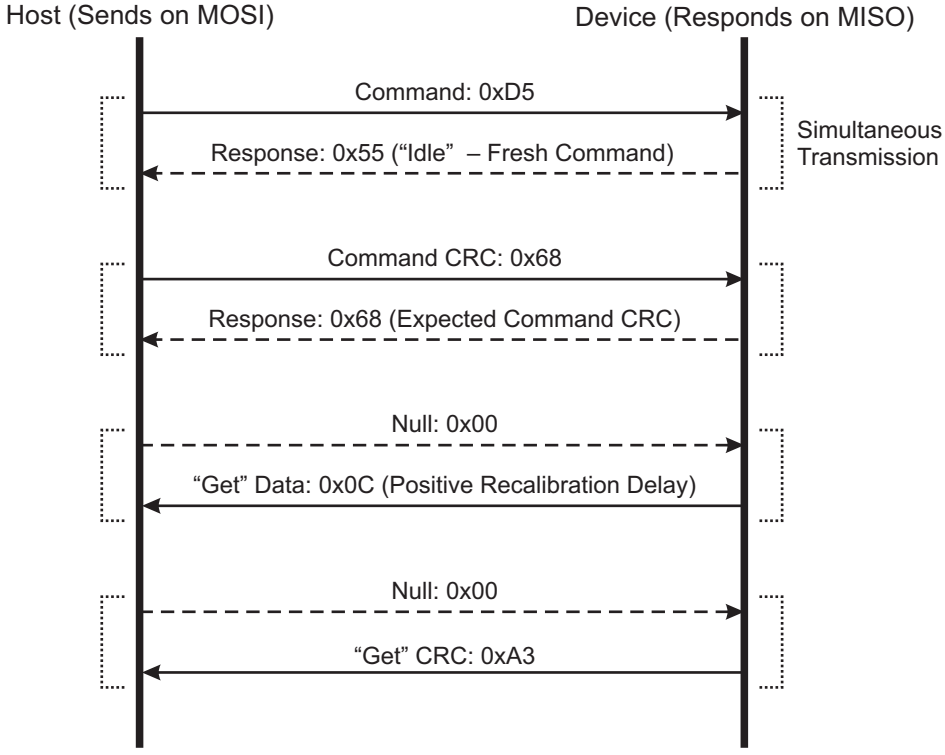

4.1.6 Quick SPI Mode

4.1.6.1 Introduction

In Quick SPI Mode, the QT1110 sends a 7-byte key report at each exchange. No host commands are required over SPI in this mode; the host clocks the data bytes out in sequence. Quick SPI mode is enabled by setting the *SPI_EN* bit in the Comms Options setup byte (see Section 7.5 on page 30).

4.1.6.2 Quick SPI Report

The 7 report bytes are in the format given in Table 4-1.

Table 4-1. Device Status Report Format

Byte	Description	Bit 7	Bit 6	Bit 5	Bit 4	Bit 3	Bit 2	Bit 1	Bit 0
0	Counter	Counter – increments from 0 to 255							
1	Detect status, channels 0 – 3	Channel 3		Channel 2		Channel 1		Channel 0	
2	Detect status, channels 4 – 7	Channel 7		Channel 6		Channel 5		Channel 4	
3	Detect status, channels 8 – 10	Reserved		Channel 10		Channel 9		Channel 8	
4	Error status, channels 0 – 3	Channel 3		Channel 2		Channel 1		Channel 0	
5	Error status, channels 4 – 7	Channel 7		Channel 6		Channel 5		Channel 4	
6	Error status, channels 8 – 10	Reserved		Channel 10		Channel 9		Channel 8	

where:

- Byte 0 is a counter that increments from 0 to 254 on successive exchanges to confirm that firmware is operating correctly.
- Bytes 1 – 3 indicate the detect status of channels 0 – 3, 4 – 7 and 8 – 10 respectively (two bits per channel), as follows:
  - 00 = Channel not in detect
  - 01 = Channel in detect
  - 10 = Not Allowed
  - 11 = Invalid Signal (Channel disabled)
- Bytes 4 – 6 indicate the error status of channels 0 – 3, 4 – 7 and 8 – 10 respectively (two bits per channel), as follows:
  - 00 = No error
  - 01 = Not allowed
  - 10 = Error on channel
  - 11 = Invalid signal (channel disabled)

Successive byte exchanges in Quick SPI mode cycle through the 7 bytes of status information. If synchronization is lost, the host must either re-synchronize by identifying the incrementing counter byte (byte 0) or pausing communications for at least 100 ms so the QT1110 will reset its SPI state.

4.1.6.3 Commands in Quick SPI Mode

Only two host commands are recognized under Quick SPI mode. These are shown in Table 4-2.

Table 4-2. Host Commands in Quick SPI Mode

Command	Code	Purpose
Store to EEPROM	0x0A	Allows for “Quick SPI mode” to be stored as the default start-up mode
Enable Full SPI	0x36	Enables full SPI mode

CRC checking is not implemented in Quick SPI mode for host commands or return data.

4.1.6.4 Quick SPI Mode timing

In Quick SPI mode, the minimum time between byte exchanges is reduced to 50 µS.

If a pause in communications of 100 ms is detected during reading of the 7-byte report, the QT1110 resets the exchange, and on the next byte read it returns byte 0 of the report.

4.2 Reset

The QT1110 can be reset using one of two methods:

- **Hardware reset:** An external reset logic line can be used if desired, fed into the $\overline{\text{RESET}}$ pin. However, under most conditions it is acceptable to tie $\overline{\text{RESET}}$ to Vdd.
- **Software reset:** A software reset can be forced using the “Reset” control command.

For both methods, the device will follow the same initialization sequence. If there any saved settings in the EEPROM, these are loaded into RAM. Otherwise the default settings are applied.

Note: The SPI interface becomes active after the QT1110 has completed its startup sequence, taking approximately 160 ms after power on/reset.

4.3 Sleep Mode

The QT1110 can be put into a very low power sleep mode (typically < 2 µA). During sleep mode, no keys are measured and the DETECT outputs are all put into high impedance mode to minimize current consumption. The device remains in sleep mode until a falling edge is detected on either the $\overline{\text{SS}}$ pin or the $\overline{\text{CHANGE}}$ pin. When the QT1110 wakes from sleep mode, it continues to operate as it was before it was put into sleep mode. The QT1110 requires approximately 100 µs to wake from sleep mode and will not respond correctly to SPI communications until the wake-up procedure is complete. The low level on the $\overline{\text{SS}}$ or $\overline{\text{CHANGE}}$ pin that is used to wake the device must be maintained for 100 µs to ensure correct operation.

Note: If the device is set to sleep mode for an extended period, the host should initiate a recalibration immediately after waking the QT1110.

4.4 Calibration

The device can be forced to recalibrate the sensor keys at any time. This can be useful where, for example, a portable device is plugged into mains power, or during product development when settings are being tuned.

The QT1110 can also be configured to automatically recalibrate if it remains in detection for too long. This avoids keys becoming “stuck” after a prolonged period of uninterrupted detection. See Section 7.18 on page 37 for details.

4.5 $\overline{\text{CHANGE}}$ Pin

The $\overline{\text{CHANGE}}$ pin can be configured using the Comms Options setup byte (see Section 7.5 on page 30) to act in one of two modes:

- Data mode
  - The $\overline{\text{CHANGE}}$ pin is asserted (pulled low) when the detection status of a key changes from that last sent to the host; that is when a key-touch or key-release event occurs.
  - The $\overline{\text{CHANGE}}$ pin is pulled low when a key status changes and is only released when the “Send All keys” report is requested (`0xC1`), or the key status information bytes are read in Quick SPI mode (see Section 7.5 on page 30).
- Touch mode
  - The $\overline{\text{CHANGE}}$ pin is pulled low when one or more keys are in detect. The $\overline{\text{CHANGE}}$ pin remains low as long as there is a key in detect, regardless of communications.
  - The $\overline{\text{CHANGE}}$ pin is released when there are no keys in detect. No host communications are required to release the $\overline{\text{CHANGE}}$ pin.

4.6 Stand-alone Mode

The QT1110 can operate in a stand-alone mode without the use of the SPI interface. The settings are loaded from EEPROM and the device operates in 7-key mode using the Detect outputs.

4.7 Key Modes

4.7.1 11-key Mode

In 11-key mode, the device can sense up to 11 keys. Alternatively, one key can be replaced by the SYNC line as an external trigger input (see Section 4.8.2 on page 19).

11-key mode is configured by setting the *MODE* bit in the Device Mode setup byte (see Section 7.4 on page 29).

Key acquisition can be triggered in one of two ways: using the internal clock to trigger acquisition either at a fixed repetition period or in a continuous “free run” mode (see Section 4.8.1), or using the SYNC pin to provide an external trigger (see Section 4.8.2 on page 19),

4.7.2 7-key Mode

In 7-key mode, the detect outputs DETECT0 to DETECT6 become active on pins 22 – 27 and 30. These outputs provide configurable PWM signals that indicate when each of the keys is touched.

7-key mode is configured by clearing the *MODE* bit in the Device Mode setup byte (see Section 7.4 on page 29).

Each DETECT output can be individually configured to output a PWM signal while the matching key is in detect or out of detect. This signal can be one of nine levels, ranging from low (PWM = 0%) to high (PWM = 100%). This allows for the use of an indicating LED. This is achieved by enabling the appropriate bit in the Key to LED setup byte (see Section 7.14 on page 35), and setting the desired outputs levels or PWMs in setup addresses 9 to 15 (see Section 7.12 on page 33).

4.8 Trigger Modes

4.8.1 Timed Trigger

In 11-key mode, The QT1110 can be configured to use the internal clock as a timed trigger. In this case, the QT1110 is configured with a cycle period, such that each acquisition cycle starts a specified length of time after the start of the previous cycle. If the cycle period is set to 0, each acquisition cycle starts as soon as the previous one has finished, resulting in the acquisition cycles running back-to-back in a “free run” mode.

The use of a timed trigger, and the cycle period to be used, is set in the Device Mode setup byte (see Section 7.4 on page 29).

4.8.2 Synchronized Trigger

In 11-key mode, if a time trigger is not enabled, the QT1110 operates in “synchronized” mode. In this mode, SNS10K is used as a SYNC pin to trigger key acquisition, rather than using the device internal clock. In this case the maximum number of keys is reduced to 10.

The SYNC pin can use one of two methods to trigger key measurements, selectable via bit 4 of the Device Mode setup byte (see Section 7.4 on page 29): Low Level and Rising Edge.

With the Low Level method the QT1110 operates in “free run” mode for as long as the SYNC pin is read as a logical 0. When the SYNC pin goes high, the current measurement cycle will be finished and no more key measurements will be taken until the SYNC pin goes low again. The low level trigger should be a minimum of 1 ms so that there is sufficient time for the device to detect the low level.

With the Rising Edge method all enabled keys are measured once when a rising edge is detected on the SYNC pin. This allows key measurements to be synchronized to an external event or condition.

For example, the SYNC pin can be used by the host to synchronize several devices to each other. This would ensure that only one of the devices outputs pulses at any given time and signals from one QT1110 do not interfere with the measurements from another.

Another use for synchronizing to the rising edge is to steady the signals when the device is running off a mains transformer with insufficient mains frequency filtering that is causing a 50 Hz or 60 Hz ripple on Vdd. If the mains voltage is scaled down with a simple voltage divider and connected to the SYNC pin, then the key measurement can be triggered by the rising edge detected at a positive going zero-crossing. Note that in this case, each key signal will be taken at the same point in the cycle, so Vdd will be the same at each measurement for a given key and the signals will be steadier.

4.9 Guard Channel Option

The device has a guard channel option (available in all key modes), which allows one key to be configured as a guard channel to help prevent false detection (see Figure 4-9 on page 20). Guard channel keys should be more sensitive than the other keys (physically bigger or larger Cs), subject to burst length limitations (see Section 4.11.2 on page 20).

With guard channel enabled, the designated key is connected to a sensor pad which detects the presence of touch and overrides any output from the other keys using the chip AKS feature. The guard channel option is enabled by the Guard Key setup byte (see Section 7.5 on page 30).

With the guard channel not enabled, all the keys work normally.

Note: If a key is already “in detect” when the guard channel becomes active, that key will remain in detect and the guard key will not activate until the active key goes out of detect.

Figure 4-9. Guard Channel Example

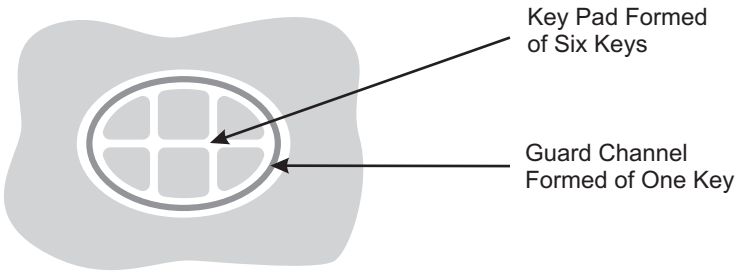

4.10 Self-test Functions

4.10.1 Internal Hardware Tests

Internal hardware tests check for hardware failure in the device internal memory areas and data paths. Any failure detected in the function or contents of application ROM, RAM or registers causes the device to reset itself.

The application code is scanned with a CRC check routine to confirm that the application data is all correct.

The RAM and registers are checked periodically (every 10 seconds) for dynamic and static failures.

4.10.2 Functional Checks

Functional checks confirm that the device is operating within expected parameters; any failure detected in these tests is notified to the system host. The device will continue to operate in the event that such functional failures are detected.

The functional tests are:

- Check that the channel-measurement signals are within the defined range.
- Confirm that data stored in the EEPROM is valid.

These tests are carried out as the particular functions are used. For example, the EEPROM is checked when the device attempts to load data from EEPROM, and the channel signals are checked when a measurement is carried out.

Note: If a particular channel is unused, the threshold of that channel should be set to 0 to prevent the incorrect reporting of the unused channel as being in an error state.

4.11 Signal Processing

4.11.1 Detection Integrator

The device features a detection integration mechanism, which acts to confirm a detection in a robust fashion. A per-key counter is incremented each time the key has exceeded its threshold. When this counter reaches a preset limit the key is finally declared to be touched. For example, if the DI limit is set to 10, then a key signal must fall by more than the key threshold, and remain below that level for 10 acquisitions, before the key is declared to be touched.

Similarly, the DI is applied to a key that is going out of detect: it must take 10 acquisitions where the signal has not exceeded its detect threshold before it is declared to leave touch.

4.11.2 Burst Length Limitations

The maximum burst length is 2048 pulses. The recommended design is to use a capacitor that gives a signal of <1000 pulses.

The number of pulses in the burst can be obtained by reading the key signal (that is, the number of pulses to complete measurement of the key signal) over the SPI interface (see Section 6.8 on page 26). Alternatively, a scope can be used to measure the entire burst, and then the burst length divided by the time for a single pulse.

Note that the keys are independent of each other. It is therefore possible, for example, to have a signal of 100 on one key and a signal of 1000 on another.

4.11.3 Adjacent Key Suppression Technology

The device includes the Atmel patented Adjacent Key Suppression (AKS) technology to allow the use of tightly spaced keys on a keypad with no loss of selectability by the user.

AKS is enabled or disabled for each key individually; only one key out of those enabled for AKS may be reported as touched at any one time. The first key touched dominates and stays in detect until it is released, even if another stronger key is reported. Once it is released, the next strongest key is reported. If two keys are simultaneously detected, the strongest key is reported, allowing a user to slide a finger across multiple keys with only the dominant key reporting touch.

Each key can be enabled for AKS processing via the AKS mask (see Section 7.11 on page 33). Keys outside the group of enabled keys may be in detect simultaneously.

5. Control Commands

5.1 Introduction

The QT1110 control commands are those commands that affect the device operation.

The control commands are listed in Table 5-1 and are described individually in the following sections.

Table 5-1. Control Commands

Command	Code	Note
Send Setups	`0x01`	Configures the device to receive setup data
Calibrate All	`0x03`	Calibrates all keys
Reset	`0x04`	Resets the device
Sleep	`0x05`	Sleep (dead) mode
Store to EEPROM	`0x0A`	Stores RAM setups to EEPROM
Restore from EEPROM	`0x0B`	Copies EEPROM setups to RAM (automatically done at startup)
Erase EEPROM	`0x0C`	Erases EEPROM setups
Recover EEPROM	`0x0D`	Restores last EEPROM settings (after erase)
Calibrate Key *k*	`0x1`*k*	Calibrates one key (key *k*)

Note: Commands are implemented immediately upon reception, so a suitable delay is required for the operation to be completed before communications can be re-established.

5.2 Send Setups (`0x01`)

This command initiates the upload of the full settings table to the QT1110 (see Section 7. on page 28).

When this command is received, the QT1110 stops key measurement and waits until 42 bytes of setup data have been received. Key acquisition will restart after all the setup data has been received.

If enabled, a CRC check byte is transmitted (both ways) after the 42 bytes to confirm that they have been received correctly.

If CRC checking is not enabled, it is recommended that the host request a dump of setup data from the QT1110, and confirms that the data correctly matches the data sent.

The host must wait for at least 150 µs for the operation to be completed before communications can be re-established.

5.3 Calibrate All (`0x03`)

This command initiates the recalibration of all sensor keys.

The host must wait for at least 150 µs for the operation to be completed before communications can be re-established.

5.4 Reset (`0x04`)

The Reset command forces the QT1110 to reset. If the setups data is present in the EEPROM, the setups are loaded into the device. Otherwise default settings are applied.

The host must wait for at least 160 ms for the operation to be completed before communications can be re-established.

5.5 Sleep (`0x05`)

The Sleep command puts the device into sleep mode (see Section 4.3 on page 17).

The host must wait for at least 150 µs after a low signal is applied to the $\overline{SS}$ or $\overline{CHANGE}$ pin to wake the device before communications can be re-established.

5.6 Store to EEPROM (`0x0A`)

Stores the current RAM contents to the QT1110 internal EEPROM. When the device is reset, it will automatically reload these settings.

The host must wait for at least 200 ms for the operation to be completed before communications can be re-established.

5.7 Restore from EEPROM (`0x0B`)

Settings stored in EEPROM are automatically loaded into RAM when the device is reset. If desired, these settings can be re-loaded into RAM using the *Restore from EEPROM* command.

The host must wait for at least 150 ms for the operation to be completed before communications can be re-established.

5.8 Erase EEPROM (`0x0C`)

This command erases the settings stored in EEPROM and then resets the QT1110. This causes the QT1110 to revert to its default settings.

The host must wait for at least 50 ms for the operation to be completed before communications can be re-established.

5.9 Recover EEPROM (`0x0D`)

This command “undeletes” the setup data that was previously stored in the device EEPROM and has been erased using the “Erase EEPROM” command.

Note: If valid settings have not previously been stored in the device EEPROM, the QT1110 continues to operate under the default settings.

The host must wait for at least 50 ms for the operation to be completed before communications can be re-established.

5.10 Calibrate Key (`0x1`*k*)

This command recalibrates the key specified by *k*. For example, to calibrate key 4, the host sends `0x14`; to calibrate key 10, the host sends `0x1A`.

The host must wait for at least 150 µs for the operation to be completed before communications can be re-established.

6. Report Requests

6.1 Introduction

The host can request reports from the QT1110, as summarized in Table 6-1.

Table 6-1. Report Requests

Command	Code	Note	Data Returned
Send First Key	`0xC0`	Returns the first detected key	1 byte
Send All keys	`0xC1`	Returns all keys	2-byte bitfield
Device Status	`0xC2`	Returns the device status	1-byte bitfield
EEPROM CRC	`0xC3`	Returns the EEPROM CRC	1 byte
RAM CRC	`0xC4`	Returns the RAM CRC	1 byte
Error Keys	`0xC5`	Returns the error keys	2-byte bitfield
Signal for Key *k*	`0x2`*k*	Returns the signal for key *k*	2-byte number
Reference for Key *k*	`0x4`*k*	Returns the reference for key *k*	2-byte number
Status for Key *k*	`0x8`*k*	Returns error conditions/touch indication for key *k*	1 byte
Detect Output States	`0xC6`	Returns the detect output states	1 byte
Last Command	`0xC7`	Returns the last command sent to QT1110	1 byte
Setups	`0xC8`	Returns the setup data	42 bytes
Device ID	`0xC9`	Returns the device ID	1 byte
Firmware Version	`0xCA`	Returns the firmware version	1 byte

Note that SPI communications are full-duplex, so the host must transmit on the MOSI pin to keep the communications active, while reading data from the QT1110 on the MOSI pin. Failure to do this within 100 ms will cause the device to assume that the exchange has been abandoned and reset the SPI interface. The host should therefore send one or two “NULL” bytes, as appropriate, on the MOSI line as it receives the 1- or 2-byte report data from the device.

6.2 First Key (`0xC0`)

This command returns 1-byte report in the format shown in Table 6-2.

Table 6-2. Send First Key Report Format

	Bit 7	Bit 6	Bit 5	Bit 4	Bit 3	Bit 2	Bit 1	Bit 0
Byte 0	DETECT	NUMKEY	ERROR		KEY_NUM			

DETECT: 0 = no key in detect; 1 = there is a key in detect.

NUMKEY: indicates the number of keys in detect:

0 = only one key is in detect (specified by “KEY_NUM”)

1 = more than one key in detect.

ERROR: 0 = there are no keys in an error state; 1 = at least one key is in error state.

KEY_NUM: the key number (0 to 10) of the key in detect (if there is only one), or the number of the first key to go into detection when there are more than one.

6.3 All Keys (0xC1)

Returns a 2-byte bit-field report indicating the detection status of all 11 keys.

Table 6-3. Send All Keys Report Format

	Bit 7	Bit 6	Bit 5	Bit 4	Bit 3	Bit 2	Bit 1	Bit 0
Byte 0						KEY_10	KEY_9	KEY_8
Byte 1	KEY_7	KEY_6	KEY_5	KEY_4	KEY_3	KEY_2	KEY_1	KEY_0

KEY_*n*: 0 = key *n* out of detect, 1 = key *n* in detect (where *n* is 0 – 10).

6.4 Device Status (0xC2)

This command returns a 1-byte bit-field report indicating the overall status of the QT1110.

Table 6-4. Device Status Report Format

	Bit 7	Bit 6	Bit 5	Bit 4	Bit 3	Bit 2	Bit 1	Bit 0
Byte 0	1	DETECT	CYCLE	ERROR	CHANGE	EEPROM	RESET	GUARD

Bits 7 is always 1; the other bits are as follows:

DETECT: 0 = no key in detect, 1 = at least 1 key in detect.

CYCLE: 0 = cycle time is good, 1 = cycle time over-run. A cycle time over-run occurs when it takes longer to measure and process all the keys than the assigned cycle time.

ERROR: 0 = no key in error state, 1 = at least 1 key in error.

CHANGE: 0 = $\overline{\text{CHANGE}}$ pin is asserted, 1 = $\overline{\text{CHANGE}}$ pin is floating.

EEPROM: 0 = EEPROM is good, 1 = EEPROM has an error. If there are no settings stored in EEPROM, the EEPROM error bit is set and a zero EEPROM CRC is returned.

RESET: set to 1 after power-on or reset, cleared when “Device Status” is read.

GUARD: 0 = guard channel is not in detect, 1 = guard channel is active or in detect. This bit will be zero if the guard channel is not enabled.

6.5 EEPROM CRC (0xC3)

This command returns a 1-byte CRC checksum for the setup data in EEPROM.

6.6 RAM CRC (0xC4)

This command returns a 1-byte CRC checksum for the setup data in RAM.

6.7 Error Keys (0xC5)

This command returns a 2-byte bit-field report indicating the error status of all 11 keys. Note that disabled keys do not report errors.

Table 6-5. Send All Keys Report Format

	Bit 7	Bit 6	Bit 5	Bit 4	Bit 3	Bit 2	Bit 1	Bit 0
Byte 0						KEY_10	KEY_9	KEY_8
Byte 1	KEY_7	KEY_6	KEY_5	KEY_4	KEY_3	KEY_2	KEY_1	KEY_0

KEY_*n*: 0 = key *n* status good, 1 = key *n* in error (where *n* is 0–10).

6.8 Signal for Key *k* (0x2*k*)

This command returns a 2-byte report containing the most recent measured signal for key *k*. The signal is returned as a 16-bit number, MSB first.

Table 6-6. Signal for Key *k* Report Format

	Bit 7	Bit 6	Bit 5	Bit 4	Bit 3	Bit 2	Bit 1	Bit 0
Byte 0	Signal MSB							
Byte 1	Signal LSB							

6.9 Reference for Key *k* (0x4*k*)

This command returns a 2-byte report containing the reference signal for key *k*. The reference is returned as a 16-bit number, MSB first.

Table 6-7. Reference for Key *k* Report Format

	Bit 7	Bit 6	Bit 5	Bit 4	Bit 3	Bit 2	Bit 1	Bit 0
Byte 0	Reference MSB							
Byte 1	Reference LSB							

6.10 Status for Key *k* (0x8*k*)

This command returns a 1-byte report containing the status for key *k*.

Table 6-8. Status for Key *k* Report Format

	Bit 7	Bit 6	Bit 5	Bit 4	Bit 3	Bit 2	Bit 1	Bit 0
Byte 0	DETECT	LBL	MBL			AKS_EN	CAL	KEY_EN

DETECT: 0ut of detect, 1 = in detect.

LBL: 0 = lower burst limit is good, 1 = lower burst limit has error.

MBL: 0 = maximum burst limit is good, 1 = maximum burst limit has error. The maximum burst limit is fixed at 2048 pulses.

AKS_EN: 0 = AKS is disabled, 1 = AKS is enabled.

CAL: 0 = normal, 1 = calibrating.

KEY_EN: 0 = key is disabled, 1 = key is enabled.

6.11 Detect Output States (`0xC6`)

This command returns a byte that indicates which PWM signal is applied to each DETECT pin.

Table 6-9. Detect Output States

	Bit 7	Bit 6	Bit 5	Bit 4	Bit 3	Bit 2	Bit 1	Bit 0
Byte 0		DET_6	DET_5	DET_4	DET_3	DET_2	DET_1	DET_0

DET_*n*: 0 = “Out of Detect” PWM is output, 1 = the “In Detect” PWM is output.

Note: Note: During “LED Detect Hold Time” or “LED Fade”, the report indicates the new state of the DETECT pin. For example, if the DETECT output is in “LED Detect Hold Time” before switching to “Out of Detect” PWM, the reported state is “0”.

6.12 Last Command (`0xC7`)

This command returns the previous 1-byte command that was received from the host. Note that this command does not return itself.

Table 6-10. Last Command

	Bit 7	Bit 6	Bit 5	Bit 4	Bit 3	Bit 2	Bit 1	Bit 0
Byte 0	Last Command							

6.13 Setups (`0xC8`)

This command returns the 42 bytes of the setups table, starting with address 0, with the most significant bit first.

6.14 Device ID (`0xC9`)

This command returns 1 byte containing the device ID (`0x57`).

Table 6-11. Device ID Report Format

	Bit 7	Bit 6	Bit 5	Bit 4	Bit 3	Bit 2	Bit 1	Bit 0
Byte 0	Device ID = `0x57`							

6.15 Firmware Version (`0xCA`)

Returns 1 byte containing the firmware version.

Table 6-12. Firmware Version Report Format

	Bit 7	Bit 6	Bit 5	Bit 4	Bit 3	Bit 2	Bit 1	Bit 0
Byte 0	Major Version				Minor Version			

7. Setups and Status Information

7.1 Introduction

The bytes of the setup table can be written to or read from individually. The setup table and the corresponding *Set* and *Get* commands are listed in Table 7-1. Note that there is a discontinuity in the *Set* and *Get* commands; `0xAF` and `0xEF` are not implemented.

Table 7-1. Memory Map

Address	Function	Set Command	Get Command
0	Device Mode	0x90	0xD0
1	Guard Key/Comms Options	0x91	0xD1
2	Detect Integrator (DI)/Drift Hold Time (DHT)	0x92	0xD2
3	Positive Threshold (PTHR)/Positive Hysterisis (PHYST)	0x93	0xD3
4	Positive Drift Compensation (PDRIFT)	0x94	0xD4
5	Positive Recalibration Delay (PRD)	0x95	0xD5
6	Lower Burst Limit (LBL)	0x96	0xD6
7	AKS Mask: Keys 8–10	0x97	0xD7
8	AKS Mask: Keys 0–7	0x98	0xD8
9	Detect0 PWM “Detect”/PWM “No Detect”	0x99	0xD9
10	Detect1 PWM “Detect”/PWM “No Detect”	0x9A	0xDA
11	Detect2 PWM “Detect”/PWM “No Detect”	0x9B	0xDB
12	Detect3 PWM “Detect”/PWM “No Detect”	0x9C	0xDC
13	Detect4 PWM “Detect”/PWM “No Detect”	0x9D	0xDD
14	Detect5 PWM “Detect”/PWM “No Detect”	0x9E	0xDE
15	Detect6 PWM “Detect”/PWM “No Detect”	0x9F	0xDF
16	LED Detect Hold Time	0xA0	0xE0
17	LED Fade/Key to LED	0xA1	0xE1
18	LED Latch	0xA2	0xE2
19	Key0 Negative Threshold (NTHR)/Negative Hysteresis (NHYST)	0xA3	0xE3
20	Key1 Negative Threshold (NTHR)/Negative Hysteresis (NHYST)	0xA4	0xE4
21	Key2 Negative Threshold (NTHR)/Negative Hysteresis (NHYST)	0xA5	0xE5
22	Key3 Negative Threshold (NTHR /Negative Hysteresis (NHYST)	0xA6	0xE6
23	Key4 Negative Threshold (NTHR /Negative Hysteresis (NHYST)	0xA7	0xE7
24	Key5 Negative Threshold (NTHR)/Negative Hysteresis (NHYST)	0xA8	0xE8
25	Key6 Negative Threshold (NTHR)/Negative Hysteresis (NHYST)	0xA9	0xE9
26	Key7 Negative Threshold (NTHR)/Negative Hysteresis (NHYST)	0xAA	0xEA
27	Key8 Negative Threshold (NTHR)/Negative Hysteresis (NHYST)	0xAB	0xEB
28	Key9 Negative Threshold (NTHR)/Negative Hysteresis (NHYST)	0xAC	0xEC

Table 7-1. Memory Map (Continued)

Address	Function	Set Command	Get Command
29	Key10 Negative Threshold (NTHR)/Negative Hysteresis (NHYST)	0xAD	0xED
30	Extend Pulse Time	0xAE	0xEE
31	Key0 Negative Drift Compensation (NDRIFT)/Negative Recalibration Delay (NRD)	0xB0	0xF0
32	Key1 Negative Drift Compensation (NDRIFT)/Negative Recalibration Delay (NRD)	0xB1	0xF1
33	Key2 Negative Drift Compensation (NDRIFT)/Negative Recalibration Delay (NRD)	0xB2	0xF2
34	Key3 Negative Drift Compensation (NDRIFT)/Negative Recalibration Delay (NRD)	0xB3	0xF3
35	Key4 Negative Drift Compensation (NDRIFT)/Negative Recalibration Delay (NRD)	0xB4	0xF4
36	Key5 Negative Drift Compensation (NDRIFT)/Negative Recalibration Delay (NRD)	0xB5	0xF5
37	Key6 Negative Drift Compensation (NDRIFT)/Negative Recalibration Delay (NRD)	0xB6	0xF6
38	Key7 Negative Drift Compensation (NDRIFT)/Negative Recalibration Delay (NRD)	0xB7	0xF7
39	Key8 Negative Drift Compensation (NDRIFT)/Negative Recalibration Delay (NRD)	0xB8	0xF8
40	Key9 Negative Drift Compensation (NDRIFT)/Negative Recalibration Delay (NRD)	0xB9	0xF9
41	Key10 Negative Drift Compensation (NDRIFT)/Negative Recalibration Delay (NRD)	0xBA	0xFA

7.2 Setting Individual Settings

To set up an individual setup value, the host sends the command listed under the "Set Command" column in Table 7-1, followed by a byte of data.

For details of the communication flow, see Section 4.1 on page 10.

7.3 Setting All the Setups

The host can send all 42 bytes of setup data to the QT1110 as a block using the Send Setups command. See Section 5.2 on page 22 for details.

7.4 Address 0: Device Mode

The Device Mode controls the overall operation of the device: number of keys, acquisition method, timing and trigger mechanism.

Table 7-2. Device Mode

Address	Bit 7	Bit 6	Bit 5	Bit 4	Bit 3	Bit 2	Bit 1	Bit 0
0	KEY_AC	MODE	SIGNAL	SYNC	REPEAT_TIME			

KEY_AC: selects the trigger source to start key acquisition; 0 = SYNC pin, 1 = timed.

MODE: selects 7-key or 11-key mode; 0 = default 7-key mode, 1 = 11-key mode.

SIGNAL: selects serial or parallel acquisition of keys signals; 0 = serial, 1 = parallel.

SYNC: selects the trigger type when SYNC Pin is selected as the trigger to start key acquisition.

0 = Level — Acquisition starts when a 0 is read at the SYNC pin. If the pin is held low, the QT1110 operates in *Free run* mode (that is, it will not sleep in between acquisitions, but start again immediately).

1 = Edge — Acquisition starts when a rising edge is detected at the SYNC pin. When acquisition and post-processing are completed, the device sleeps until another rising edge is detected at the SYNC pin.

REPEAT_TIME: selects the "repeat" time when "Timed" is selected as the trigger to start key acquisition. The number entered is a multiple of 16 ms. If 0 is entered, the device will operate in a continuous *free run* mode; that is, the QT1110 will not sleep after its cycle is completed but will begin the next key acquisition cycle immediately.

Default KEY_AC value: 1 (timed)
Default MODE value: 0 (7-key mode)
Default SIGNAL value: 1 (parallel)
Default SYNC value: 1 (edge)
Default REPEAT_TIME value: 2 (32 ms cycle)

7.5 Address 1: Guard Key/Comms Options

Table 7-3. Guard Key/Comms Options

Address	Bit 7	Bit 6	Bit 5	Bit 4	Bit 3	Bit 2	Bit 1	Bit 0
1	GUARD_KEY				GD_EN	SPI_EN	CHG	CRC

GUARD_KEY: specifies the key (0 to 10) to be used as a guard channel (see Section 2.3 on page 7) .

GD_EN: enables the use of a guard key; 0 = disable, 1 = enable.

SPI_EN: enables the Quick SPI interface; 0 = disable, 1 = enable.

See Section 4.1.6 on page 16 for details of the Quick SPI Mode report.

To exit this mode (and clear the *SPI_EN* bit), the command `0x36` should be sent. To save the settings to EEPROM and make Quick SPI mode active on startup, send the *Store to EEPROM* command (`0x0A`). Any other data sent is ignored in Quick SPI mode.

CHG: the $\overline{\text{CHANGE}}$ pin mode (see Section 4.5 on page 18):

0 = *Data* mode. In this mode the $\overline{\text{CHANGE}}$ pin is asserted to indicate unread data.

1 = *Touch* mode. In this mode the $\overline{\text{CHANGE}}$ pin is asserted when a key is being touched or is in detect.

CRC: enables or disables CRC; 0 = disable, 1 = enable. When this option is enabled, each data exchange must have a CRC byte appended.

When report or setup data is being returned by the QT1110, a 1-byte checksum is returned. The host should confirm that this checksum is correct and, if not, should request the report again.

Where data is being sent by the host, a 1-byte CRC should be sent. The QT1110 returns the expected CRC byte in the same transaction the CRC byte is sent. In this way, the host can immediately determine whether the setup data bytes were received correctly.

Default GUARD_KEY value: 0 (Key 0)
Default GD_EN value: 0 (disabled)
Default CHG value: 0 (data mode)
Default CRC value: 0 (disabled)

7.6 Address 2: Detect Integrator Limit (DIL)/Drift Hold Time (DHT)

Table 7-4. Detect Integrator/Drift Hold Time

Address	Bit 7	Bit 6	Bit 5	Bit 4	Bit 3	Bit 2	Bit 1	Bit 0
2	DIL				DHT			

DIL: the detection integrator (DI) limit. To suppress false detections caused by spurious events like electrical noise, the device incorporates a DI counter mechanism. A per-key counter is incremented each time the channel has exceeded its threshold and stayed there for a number of acquisitions in succession, without going below the threshold level. When this counter reaches a preset limit the channel is finally declared to be touched. If on any acquisition the delta is not seen to exceed the threshold level, the counter is cleared and the process has to start from the beginning.

Note: A setting of 0 for DI is invalid; the valid range is 1 to 15.

DHT: the drift hold time. After a key-touch has been removed, the QT1110 pauses in the implementation of its “Drift” compensation for a time. After this time has expired, drift compensation continues as normal. The Drift Hold Time is a multiple of 160 ms, providing options from 0 to 2400 ms.

Default DIL value: 3
Default DHT value: 8 (1280 ms)

7.7 Address 3: Positive Threshold (PTHR)/Positive Hysteresis (PHYST)

Table 7-5. Positive Threshold (THR)/Positive Hystereis (HYST)

Address	Bit 7	Bit 6	Bit 5	Bit 4	Bit 3	Bit 2	Bit 1	Bit 0
3	PTHR						PHYST	

PTHR: the positive threshold for the signal. If a key signal is significantly higher than the reference signal, this typically indicates that the calibration data is no longer valid. In other words, some factor has changed since the calibration was carried out, thus rendering it invalid. Generally this is compensated for by the drift, but the greater the difference the longer this will take. In order to speed up this correction, the positive threshold is used: if the positive threshold is exceeded, the QT1110 (that is, all keys) is recalibrated.

PHYST: positive hysteresis. This setting provides a greater degree of control over the implementation of the positive threshold recalibration. The positive hysteresis operates as a “modifier” for the positive threshold. When a key signal is detected as being over the positive threshold, the positive threshold is reduced by a factor corresponding to the positive hysteresis so that the key will not go in and out of positive detection when the signal is on the borderline between drift-compensation of a positive error or recalibration.

The settings for positive hysteresis are:

00 = No change to positive threshold

01 = 12.5% reduction in positive-detect threshold

10 = 25% reduction in positive-detect threshold

11 = 37.5% reduction in positive-detect threshold

Default PTHR value: 4 (4 counts above reference)
Default PHYST value: 2 (25% positive hysteresis)

7.8 Address 4: Positive Drift Compensation (PDRIFT)

Table 7-6. Positive Drift Compensation

Address	Bit 7	Bit 6	Bit 5	Bit 4	Bit 3	Bit 2	Bit 1	Bit 0
4	0	PDRIFT						

When changing ambient conditions cause a change in the key signal, the QT1110 will compensate through its drift functions. *Positive Drift* refers to the case where the signal for a key is greater than the reference.

Drift compensation occurs at a rate of 1 count per drift compensation period.

PDRIFT: the drift compensation period, in multiples of 160 ms. The valid range is 0 to 127, where 0 disables positive drift compensation.

Note: Drift compensation timing is paused while Drift Hold is activated, and continued when Drift Hold has timed out.

Default value: 6 (960 ms)

7.9 Address 5: Positive Recalibration Delay (PRD)

Table 7-7. Positive Recalibration Delay

Address	Bit 7	Bit 6	Bit 5	Bit 4	Bit 3	Bit 2	Bit 1	Bit 0
5	PRD							

If a key signal is determined to be above the positive threshold, the QT1110 will wait for this delay and confirm that the error condition is still present before initiating a recalibration.

PRD: the positive recalibration delay, in multiples of 160 ms.

Note: All keys are recalibrated in the case of a positive recalibration.

Default value: 6 (960 ms)

7.10 Address 6: Lower Burst Limit (LBL)

Table 7-8. Lower Burst Limit

Address	Bit 7	Bit 6	Bit 5	Bit 4	Bit 3	Bit 2	Bit 1	Bit 0
6	LBL							

Normal QTouch signals are in the range of 100 to 1000 counts for each key. The lower burst limit determines the minimum signal that is considered as a valid acquisition. If the count is lower than the lower burst limit, it is considered not to be valid and the key is set to an Error state.

Note: Where a key has a signal of less than the LBL, a detection is not reported on that key.

Default value: 18

7.11 Addresses 7 – 8: AKS Mask

Table 7-9. AKS Mask

Address	Bit 7	Bit 6	Bit 5	Bit 4	Bit 3	Bit 2	Bit 1	Bit 0
7						AKS_10	AKS_9	AKS_8
8	AKS_7	AKS_6	AKS_5	AKS_4	AKS_3	AKS_2	AKS_1	AKS_0

AKS_*n* (AKS Mask): 0 = key *n* AKS disabled, 1 = key *n* AKS enabled (where *n* is 0–10).

These bits control which keys have AKS enabled (see Section 3. on page 8). A “1” means the corresponding key has AKS enabled; a 0 means that the corresponding key has AKS disabled.

Default AKS mask: `0x07` and `0xFF` (all keys have AKS enabled)

7.12 Addresses 9 – 15: Detect0 – Detect6 PWM

Each of the 7 detect pins can be configured to output a PWM signal to indicate whether the key is touched (in detect) or not touched (out of detect).

The Detect outputs must be enabled by selecting 7-key mode in the “Device Mode” setting (see Section 7.4 on page 29), and the corresponding “Key to LED” bits must be set to enable the individual *Detect* outputs for each key (see Section 7.14 on page 35).

Table 7-10. Detect0 – Detect6 PWM

Address	Bit 7	Bit 6	Bit 5	Bit 4	Bit 3	Bit 2	Bit 1	Bit 0
9	IN_DETECT0				OUT_DETECT0			
10	IN_DETECT1				OUT_DETECT1			
11	IN_DETECT2				OUT_DETECT2			
12	IN_DETECT3				OUT_DETECT3			
13	IN_DETECT4				OUT_DETECT4			
14	IN_DETECT5				OUT_DETECT5			
15	IN_DETECT6				OUT_DETECT6			

IN_DETECT*n*: PWM to output when key *n* is “In Detect” (where *n* is 0–6).

OUT_DETECT*n*: PWM to output when key *n* is “Out of Detect” (where *n* is 0–*7*). This PWM is also output if the DETECT output is “disconnected” from the key (that is, “LED_*n*” in address 17 is set to 0), allowing the host to directly control the PWM output.

The values for the “IN_DETECT*n*” and “OUT_DETECT*n”* nibbles are listed in Table 7-11.

Table 7-11. PWM Values

Value	Meaning
0	0%
1	12.5%
2	25%
3	37.5%
4	50%
5	62.5%
6	75%
7	87.5%
8	100%

Default IN_DETECT*n* value: 8 (100% PWM – on)
Default OUT_DETECT*n* value: 0 (0% PWM – off)

7.13 Address 16: LED Detect Hold Time

Table 7-12. LED Detect Hold Time

Address	Bit 7	Bit 6	Bit 5	Bit 4	Bit 3	Bit 2	Bit 1	Bit 0
16	LED_DETECT_HOLD_TIME							

When a key is touched, if the “Detect” outputs and “Key to LED” options are enabled (see Section 7.12 and Section 7.14), the corresponding “Detect” pin will output its “In-Detect” PWM signal.

After the key touch is removed, the “Detect” output can be held at the “In-Detect” PWM signal for a time before returning to the “Out of Detect” PWM signal. This allows a reasonable length of time for an LED to be illuminated. The length of this time is controlled by the LED Detect Hold Time. Valid values are in multiples of 16 ms.

Default value: 0 (0 ms)

7.14 Address 17: LED Fade/Key to LED

Table 7-13. LED Fade/Key to LED

Address	Bit 7	Bit 6	Bit 5	Bit 4	Bit 3	Bit 2	Bit 1	Bit 0
17	FADE	LED_6	LED_5	LED_4	LED_3	LED_2	LED_1	LED_0

FADE: enables/disables fading for all LEDs. This is a global setting; either all LEDs fade, or none of them.

0 = disable (no fade).

1 = enable fading on and off.

LED_*n*: activates the LED output for the corresponding key output DETECT*n* (where *n* is 0–6).

1 = enables the “Detect” output to follow the status of the corresponding key.

0 = disable this function, in which case the “Detect” pin will always output its “Out of Detect” PWM (see Section 7.12 on page 33).

Default FADE value: 0 (disabled)
Default LED_*n* value: 1 (enabled)

7.15 Address 18: LED Latch

Table 7-14. LED Latch

Address	Bit 7	Bit 6	Bit 5	Bit 4	Bit 3	Bit 2	Bit 1	Bit 0
18	0	LATCH_6	LATCH_5	LATCH_4	LATCH_3	LATCH_2	LATCH_1	LATCH_0

LATCH_*n*: enables/disables latching of the LED for the corresponding key output DETECT*n* (where *n* is 0–6).

1 = enables latching. When latching is enabled for a given LED, the LED toggles its state each time the key is touched.

0 = disables latching.

Note that bit 7 is reserved and should be set to zero.

Default LATCH_*n* value: `0x00` (latch disabled)

7.16 Addresses 19 – 29: Negative Threshold (NTHR) / Negative Hysteresis (NHYST)

Table 7-15. Negative Threshold / Negative Hysteresis

Address	Bit 7	Bit 6	Bit 5	Bit 4	Bit 3	Bit 2	Bit 1	Bit 0
19	KEY_0_NTHR						KEY_0_NHSYT	
20	KEY_1_NTHR						KEY_1_NHSYT	
21	KEY_2_NTHR						KEY_2_NHSYT	
22	KEY_3_NTHR						KEY_3_NHSYT	
23	KEY_4_NTHR						KEY_4_NHSYT	
24	KEY_5_NTHR						KEY_5_NHSYT	
25	KEY_6_NTHR						KEY_6_NHSYT	

Table 7-15. Negative Threshold / Negative Hysteresis (Continued)

Address	Bit 7	Bit 6	Bit 5	Bit 4	Bit 3	Bit 2	Bit 1	Bit 0
26	KEY_7_NTHR						KEY_7_NHSYT	
27	KEY_8_NTHR						KEY_8_NHSYT	
28	KEY_9_NTHR						KEY_9_NHSYT	
29	KEY_10_NTHR						KEY_10_NHSYT	

KEY_*n*_NTHR: the negative threshold for key *n* (where *n* is 0–10).

The negative threshold determines how much the signal must fall (compared to the reference) before a key is considered to be “In Detect”. This level will generally need to be tuned individually for each key. To disable an individual key, set the threshold for that key to 0.

KEY_*n*_NHYST: the negative hysteresis applied to key *n* detection threshold (where *n* is 0 – 10).

Negative Hysteresis operates as a “modifier” for the negative threshold in order to provide a greater degree of control over the detection of a “Touch”. When a key signal is first detected as being under the negative threshold, the threshold is reduced by a factor corresponding to the selected negative hysteresis. This means that the key will not go in and out of detection when the signal is on the borderline between drift-compensation or touch detection.

The settings for negative hysteresis are:

00 No change to negative threshold

01 12.5% reduction in negative threshold

10 25% reduction in negative threshold

11 37.5% reduction in negative threshold

Default KEY_*n*_NTHR value: 10 counts
Default KEY_*n*_NHYST value: 2 (25 percent)

7.17 Address 30: Extend Pulse Time

Table 7-16. Extend Pulse Time

Address	Bit 7	Bit 6	Bit 5	Bit 4	Bit 3	Bit 2	Bit 1	Bit 0
30	HIGH_TIME				LOW_TIME			

HIGH_TIME: Number of µs to extend the high pulse time.

LOW_TIME: Number of µs to extend the low pulse time.

7.18 Addresses 31 – 41: Negative Drift Compensation (NDRIFT) / Negative Recalibration Delay (NRD)

Table 7-17. Negative Drift Compensation / Negative Recalibration Delay

Address	Bit 7	Bit 6	Bit 5	Bit 4	Bit 3	Bit 2	Bit 1	Bit 0
31	KEY_0_NDRIFT				KEY_0_NRD			
32	KEY_1_NDRIFT				KEY_1_NRD			
33	KEY_2_NDRIFT				KEY_2_NRD			
34	KEY_3_NDRIFT				KEY_3_NRD			
35	KEY_4_NDRIFT				KEY_4_NRD			
36	KEY_5_NDRIFT				KEY_5_NRD			
37	KEY_6_NDRIFT				KEY_6_NRD			
38	KEY_7_NDRIFT				KEY_7_NRD			
39	KEY_8_NDRIFT				KEY_8_NRD			
40	KEY_9_NDRIFT				KEY_9_NRD			
41	KEY_10_NDRIFT				KEY_10_NRD			

KEY_*n*_NDRIFT: the negative drift compensation for key *n* (where *n* is 0–10).

When changing ambient conditions cause a change in the key signal, the QT1110 will compensate through its drift functions. “Negative Drift” refers to the case where the signal for a key is lower than the reference. Drift compensation occurs at a rate of 1 count per drift compensation period. The entered number is a multiple of 320 ms.

Note that as a key touch, or an approaching touch, naturally causes a negative change in the signal, negative drift should be carried out at a much slower rate than positive drift. Otherwise, a slowly approaching finger will not cause a touch detection, as the falling signal could be compensated through the negative drift mechanism.

Note: Drift compensation timing is paused while Drift Hold is activated, and continues when Drift Hold has timed out.

KEY_*n*_NRD: the negative recalibration delay for key *n* (where *n* is 0 – 10).

In order to avoid a situation where a key remains “stuck” in detect due to, for example, changing environmental conditions, the “Negative Recalibration Delay” sets an upper limit on how long a key can remain “touched”. When this time is exceeded, the QT1110 (that is, all keys) is recalibrated, taking this key (and any others which are in detect) out of detection. This delay is set in a multiple of 2560 ms.

Note: A setting of “0” disables the NRD Timeout.

Default KEY_*n*_NDRIFT value: 7 (2240 ms)
Default KEY_*n*_NRD value: 10 (25.6 s)

8. Specifications

8.1 Absolute Maximum Specifications

Vdd	–0.5 V to +6 V
Max continuous pin current, any control or drive pin	±10 mA
Voltage forced onto any pin	–1.0 V to (Vdd + 0.5) V
EEPROM setups maximum writes	100,000 write cycles

CAUTION: Stresses beyond those listed under *Absolute Maximum Specifications* may cause permanent damage to the device. This is a stress rating only and functional operation of the device at these or other conditions beyond those indicated in the operational sections of this specification is not implied. Exposure to absolute maximum specification conditions for extended periods may affect device reliability

8.2 Recommended Operating Conditions

Operating temperature	–40°C to +85°C
Storage temperature	–65°C to +150°C
Vdd	3 V to 5.5 V
Supply ripple + noise	±20 mV
Cx transverse load capacitance per key	2 pF to 20 pF

8.3 DC Specifications

Vdd = 5.0V, Cs = 4.7 nF, Rs = 1 MΩ, Ta = recommended range, unless otherwise noted

Parameter	Description	Min	Typ	Max	Units	Notes
Iddr	Average supply current, running	–	–	12 at 5 V 8 at 3 V	mA	For typical values see Section 8.8
Vil	Low input logic level	–0.5V	–	0.3 × Vdd	V	
Vih	High input logic level	0.6 × Vdd	Vdd	Vdd + 0.5	V	
Vol	Low output voltage	0	–	0.7	V	10 mA sink current
Voh	High output voltage	0.8 × Vdd	–	Vdd	V	10 mA source current
Iil	Input leakage current	–	<0.05	1	µA	
Rrst	Internal $\overline{RST}$ pull-up resistor	30	–	60	kΩ	

8.4 Timing Specifications

Parameter	Description	Min	Typ	Max	Units	Notes
T_{BS}	Burst duration	–	5	–	ms	4.7 nF Cs
Fc	Burst center frequency	–	53	–	kHz	
Fm	Burst modulation, percentage	–	18	–	%	
T_{PW}	Pulse width	–	6000	–	ns	

8.5 SPI Bus Specifications

8.5.1 General Specifications

Parameter	Specification
Address space	8-bit
Maximum clock rate	1.5 MHz
Minimum low clock period	333 ns
Minimum high clock period	333 ns
Clock idle	High
Setup on	Leading (falling) edge
Clock out on	Trailing (rising) edge
SPI Enable delay (SS low to SCK low)	1 µs minimum

8.5.2 Full SPI Mode

Parameter	Specification
Minimum time between bytes	150 µs
Minimum time between communications	Generally 150 µs; longer delays required to implement some commands, as follows: • Send Setups: 150 µs after all setup bytes are returned • Calibrate All: 150 µs • Calibrate Key: 150 µs • Reset: 160 ms • Sleep: 150 µs after a low signal is applied to $\overline{SS}$ or $\overline{CHANGE}$ to wake the device • Store to EEPROM: 200 ms • Restore from EEPROM: 150 ms • Erase EEPROM: 50 ms • Recover EEPROM: 50 ms

8.5.3 Quick SPI Mode

Parameter	Specification
Minimum time between bytes	50 µs
Minimum time between communications	Generally 50 µs, except for the following: • Store to EEPROM: 200 ms • Switch to Full SPI: 150 µs

Figure 8-1. Data Byte Exchange

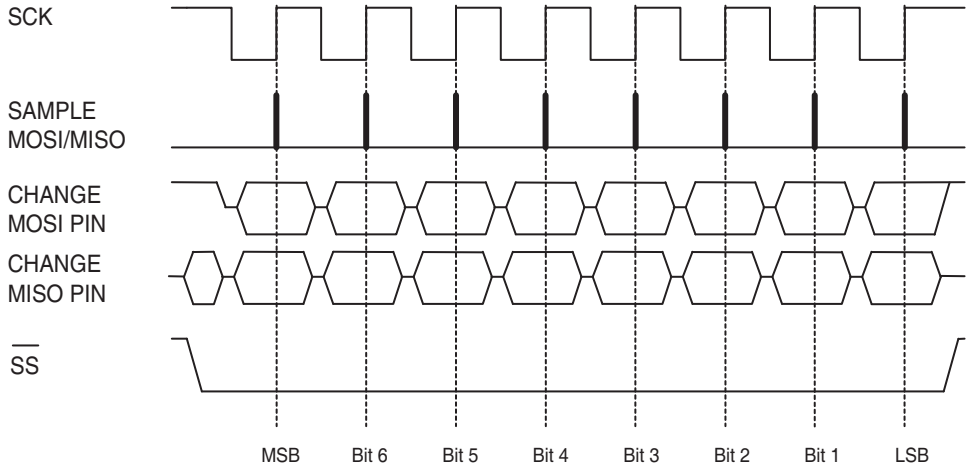

8.6 External Reset

Parameter	Description	Operation
V_{RST}	Threshold voltage low (Activate) Threshold voltage high (Release)	0.2 × Vdd 0.9 × Vdd
Reset	Minimum length of Reset low	600 ns at 5 V 1100 ns at 3 V

8.7 Internal Resonator

Parameter	Operation
Internal RC oscillator	8 MHz with spread-spectrum modifier during measurement bursts

8.8 Power Consumption

		7-key Parallel		7-key Serial		11-key Parallel		11-key Serial		11-key Serial, 1 key enabled	
Vdd (V)	Cycle Time	Actual Cycle Time (ms)	Idd (µA)	Actual Cycle Time (ms)	Idd (µA)	Actual Cycle Time (ms)	Idd (µA)	Actual Cycle Time (ms)	Idd (µA)	Actual Cycle Time (ms)	Idd (µA)
4.7 nF Cs Capacitors											
3.0	0 (Free Run)	13.2	2470	26.6	2350	15.3	2385	37.4	2420	2.15	2107
	1 (16 ms Nominal)	17.2	2180	26.6	2350	17.3	2182	37.4	2420	16.5	950
	2 (32 ms Nominal)	33.6	1470	34.4	1950	33.8	1435	37.4	2420	33	739
	4 (64 ms Nominal)	66.4	1010	67.2	1325	66.4	1045	68.4	1587	66	691
	8 (128 ms Nominal)	132	840	133	1025	132	840	134	1120	132	668
	15 (240 ms Nominal)	248	815	250	850	250	810	250	1008	248	656
5.0	0 (Free Run)	15.1	5530	30.2	5405	17.3	5674	43.6	5425	2.15	4860
	1 (16 ms Nominal)	17.2	5290	30.2	5405	17.3	5674	43.6	5425	16.3	2965
	2 (32 ms Nominal)	33.4	4210	34.4	5350	33.6	4013	43.6	5425	32.6	2400
	4 (64 ms Nominal)	65.6	3120	66.8	4015	65.6	3240	67.6	4130	64.8	2248
	8 (128 ms Nominal)	130	2705	132	3225	130	2840	132	3530	129	2206
	15 (240 ms Nominal)	244	2440	244	3035	246	2465	245	3015	244	2163
10 nF Cs Capacitors											
3.0	0 (Free Run)	24.2	2375	48.4	2430	24.2	2434	63.6	2416	8.6	2130
	1 (16 ms Nominal)	24.2	2375	48.4	2430	24.2	2434	63.6	2416	16.7	1422
	2 (32 ms Nominal)	34.4	1860	48.4	2430	34	1945	63.6	2416	33	1065
	4 (64 ms Nominal)	66.8	1285	68.4	1910	66.4	1290	69.6	2260	65	848
	8 (128 ms Nominal)	131	995	133	1320	132	980	134	1485	130	766
	15 (240 ms Nominal)	246	845	248	1030	246	824	248	1080	243	708
5.0	0 (Free Run)	26	5810	56.4	5510	28	5675	73.6	5596	8.6	5145
	1 (16 ms Nominal)	26	5810	56.4	5510	28	5675	73.6	5596	16.6	3990
	2 (32 ms Nominal)	34	5170	56.4	5510	34	5196	73.6	5596	32.6	3160
	4 (64 ms Nominal)	66	3990	67.6	5120	66.4	3780	73.6	5596	64.8	2690
	8 (128 ms Nominal)	131	3290	132	3850	130	2910	133	4055	129	2310
	15 (240 ms Nominal)	244	2950	244	3310	242	2675	246	3170	241	2270

Note: These values are for reference only; values are untested.

8.9 Mechanical Dimensions

8.9.1 AT42QT1110-MU – 32-pin 5 x 5 mm QFN

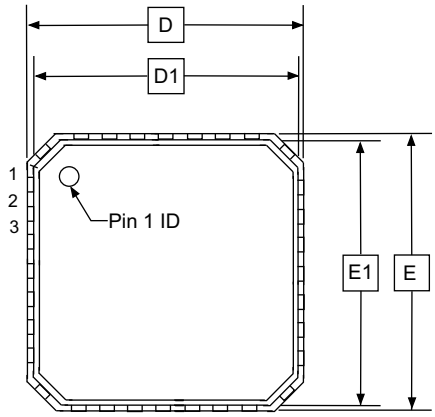

TOP VIEW

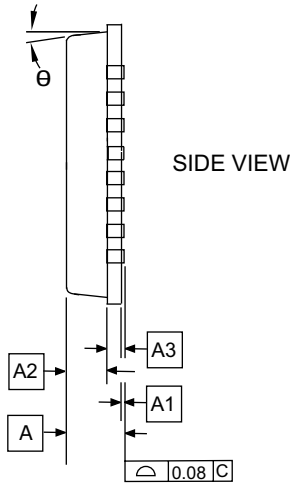

SIDE VIEW

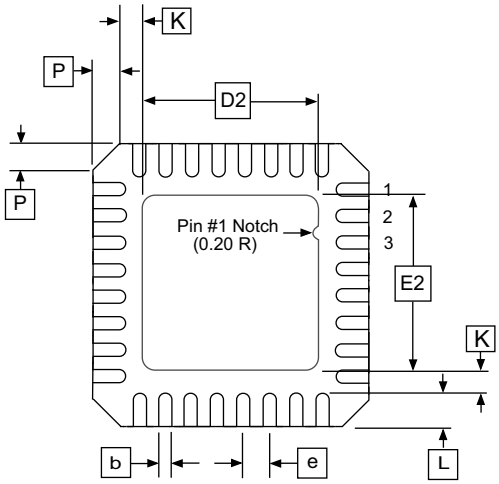

BOTTOM VIEW

COMMON DIMENSIONS
(Unit of Measure = mm)

SYMBOL	MIN	NOM	MAX	NOTE
A	0.80	0.85	1.00	
A1	0.00	0.01	0.05	
A2	–	0.65	0.70	
A3	0.20 REF			
b	0.18	0.23	0.30	
D	4.90	5.00	5.10	
D1	4.70	4.75	4.80	
D2	2.95	3.10	3.25	
E	4.90	5.00	5.10	
E1	4.70	4.75	4.80	
E2	2.95	3.10	3.25	
e	0.50 BSC			
L	0.30	0.40	0.50	
P	–	–	0.60	
θ	–	–	12°	
K	0.20	–	–	

NOTES:

JEDEC Standard MO-220, Fig 2 (Anvil Singulation), VHHD-2.

1/10/13

Atmel Package Drawing Contact: packagedrawings@atmel.com	TITLE **32M1-A**, 32-pad, 5x5x1.0 mm Body, Lead Pitch 0.50mm, 3.10mm2 Exposed Pad, Very-Thin, Fine Pitch Quad Flat No Lead Package (VQFN)	GPC ZVY	DRAWING NO. 32M1-A	REV. G

8.9.2 AT42QT1110-AU – 32-pin 7 x 7 mm TQFP

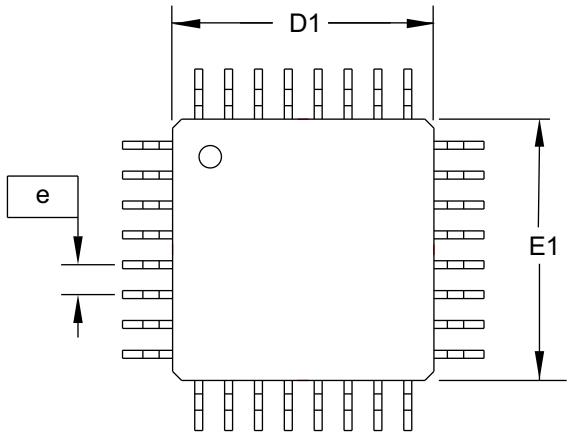

TOP VIEW

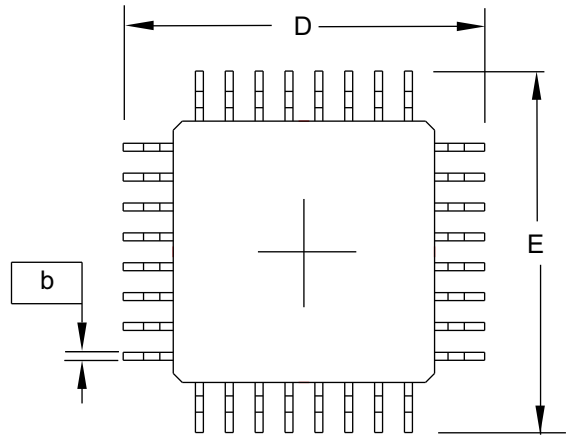

BOTTOM VIEW

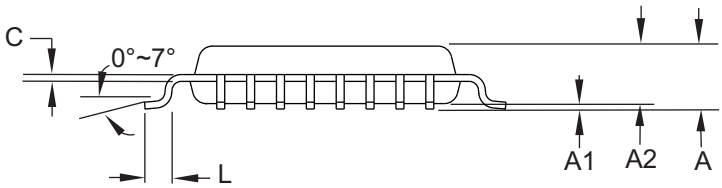

SIDE VIEW

COMMON DIMENSIONS
(Unit of Measure = mm)

SYMBOL	MIN	NOM	MAX	NOTE
A	–	–	1.20	
A1	0.05	–	0.15	
A2	0.95	1.00	1.05	
D	8.75	9.00	9.25	
D1	6.90	7.00	7.10	Note 2
E	8.75	9.00	9.25	
E1	6.90	7.00	7.10	Note 2
b	0.30	–	0.45	
C	0.09	–	0.20	
L	0.45	–	0.75	
e	0.80 TYP			

Notes:
1. This package conforms to JEDEC reference MS-026, Variation ABA.
2. Dimensions D1 and E1 do not include mold protrusion. Allowable protrusion is 0.25 mm per side. Dimensions D1 and E1 are maximum plastic body size dimensions including mold mismatch.
3. Lead coplanarity is 0.10 mm maximum.

1/10/13

Atmel Package Drawing Contact: packagedrawings@atmel.com	TITLE **32A**, 32-lead 7.0 x 7.0x1.0 mm Body, 0.80 mm Lead Pitch, Thin Profile Plastic Quad Flat Package (TQFP)	GPC AUT	DRAWING NO. 32A	REV. D

8.10 Marking

8.10.1 AT42QT1110-MU – 32-pin 5 x 5 mm QFN

Either of the following markings may be used.

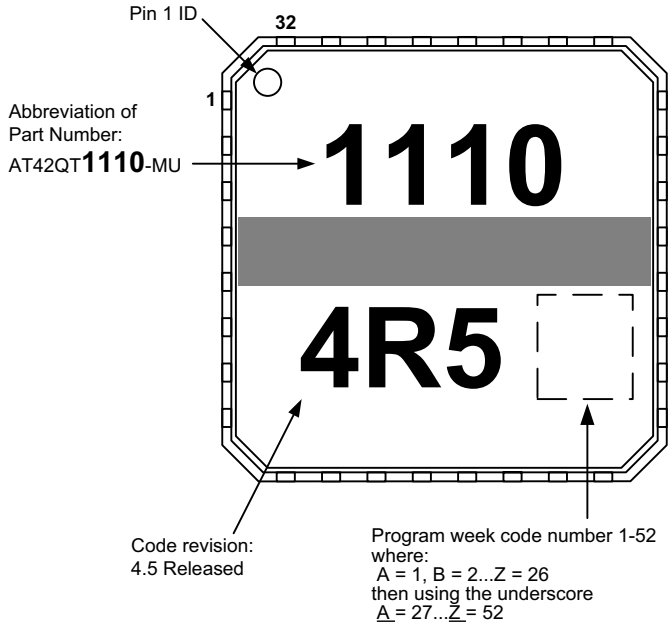

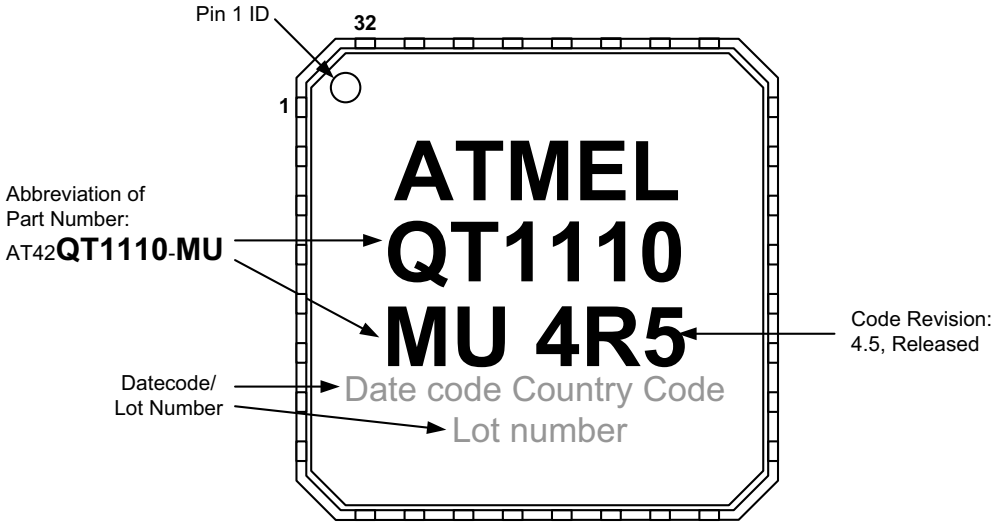

8.10.2 AT42QT1110-AU – 32-pin 7 x 7 mm TQFP

Either of the following markings may be used.

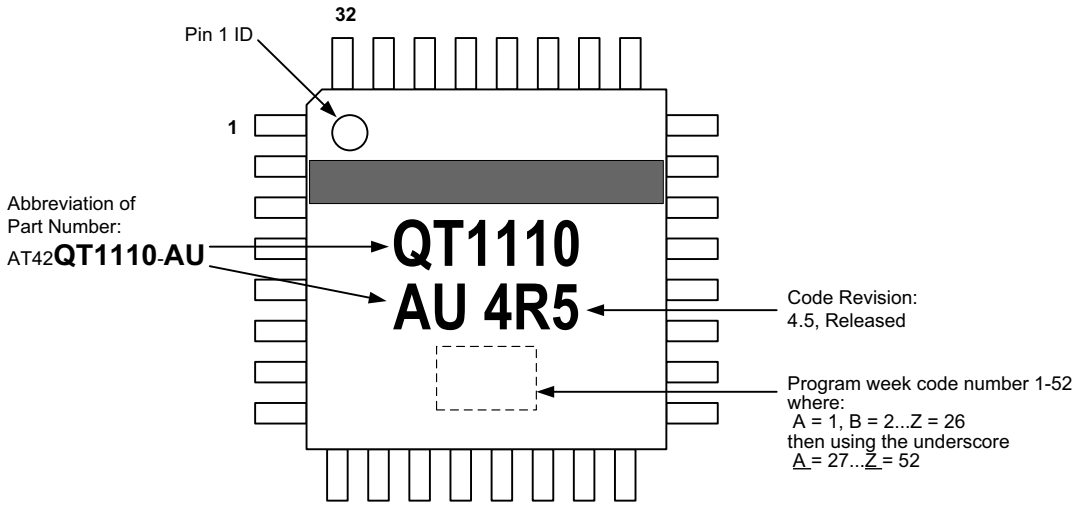

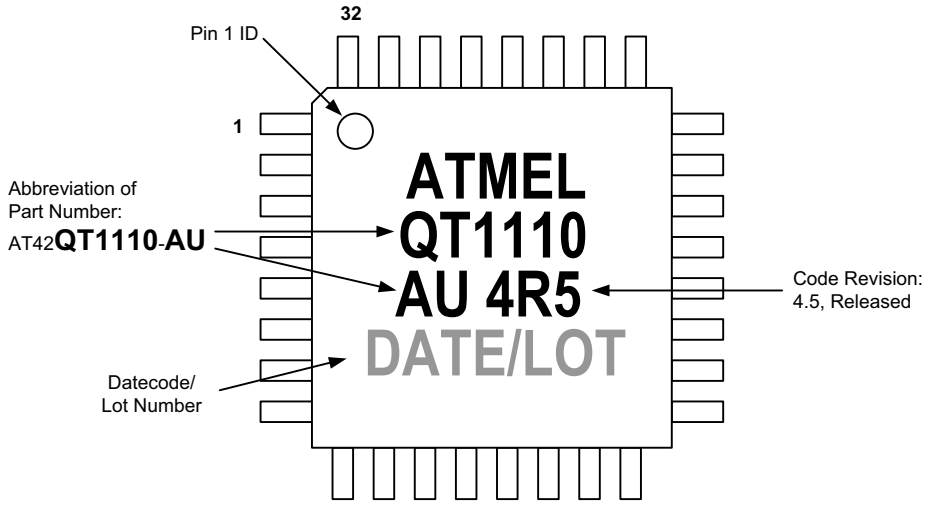

8.11 Part Number

Part Number	Description
AT42QT1110-MU	32-pin 5 x 5 mm QFN RoHS compliant (-40°C to +85°C)
AT42QT1110-AU	32-pin 7 x 7 mm TQFP RoHS compliant (-40°C to +85°C)

8.12 Moisture Sensitivity Level (MSL)

MSL Rating	Peak Body Temperature	Specifications
MSL3	260°C	IPC/JEDEC J-STD-020

Appendix A. CRC Calculation

If the use of a cyclic redundancy check (CRC) during data transmission is enabled, the host must generate a valid CRC so that this can be correctly compared to the corresponding CRC generated by the QT1110. This appendix gives example C code to show how the CRC can be generated by the host.

```
/*=====================================================================
unsigned char calc_crc(unsigned char crc, unsigned char data)
-------------------------------------------------------------------------
Purpose: Calculate CRC for data packets
Input : CRC, Data
Output : Updated CRC
Notes : -
=========================================================================*/
unsigned char calc_crc(unsigned char crc, unsigned char data)
{
        unsigned char index;
        unsigned char fb;
        index = 8;
        do
        {
                fb = (crc ^ data) & 0x01u;
                data >>= 1u;
                crc >>= 1u;
                if(fb)
                {
                        crc ^= 0x8c;
                }
        } while(--index);
return crc;
}

/* Example Calling Routine */
unsigned char calculate_config_checksum(void)
{
        int i;
        unsigned char CRC_val = 0;
        unsigned char setup_data[42] =
        {
                0xB2, 0x00, 0x38, 0x12, 0x06, 0x06, 0x12, 0x07, 0xFF, 0x80,
                0x80, 0x80, 0x80, 0x80, 0x80, 0x80, 0x32, 0xFF, 0x00, 0x29,
                0x80, 0x80, 0x80, 0x80, 0x80, 0x80, 0x80, 0x80, 0x80, 0x80,
                0X00, 0x7A, 0x7A, 0x7A, 0x7A, 0x7A, 0x7A, 0x7A, 0x7A, 0x7A,
                0x7A, 0x7A
        };

  for(i = 0; i < sizeof(setup_data); i++)
        {
                CRC_val = calc_crc(CRC_val, setup_data[i]);
        }
        return(CRC_val);
}
```

Revision History

Revision No.	History
Revision A – November 2008	• Initial Release
Revision B – December 2008	• Updated for chip revision 2.1
Revision C – December 2008	• Updated SPI specifications
Revision D – February 2009	• Updated for chip revision 3.1
Revision E – April 2009	• Updated for chip revision 3.2: added self-test function
Revision F – July 2009	• Updated for chip revision 4.3: added Quick SPI mode
Revision G – October 2009	• Updated for chip revision 4.4 • Updated specifications
Revision H – February 2010	• Description of Quick SPI mode timing updated
Revision I – March 2010	• Updated for chip revision 4.5
Revision J – May 2013	• General Updates • Updated Package Drawings • Applied new template

Enabling Unlimited Possibilities®

Atmel Corporation
1600 Technology Drive
San Jose, CA 95110
USA
Tel: (+1) (408) 441-0311
Fax: (+1) (408) 487-2600
www.atmel.com

Atmel Asia Limited
Unit 01-5 & 16, 19F
BEA Tower, Millennium City 5
418 Kwun Tong Roa
Kwun Tong, Kowloon
HONG KONG
Tel: (+852) 2245-6100
Fax: (+852) 2722-1369

Atmel München GmbH
Business Campus
Parkring 4
D-85748 Garching bei München
GERMANY
Tel: (+49) 89-31970-0
Fax: (+49) 89-3194621

Atmel Japan G.K.
16F Shin-Osaki Kangyo Bldg
1-6-4 Osaki, Shinagawa-ku
Tokyo 141-0032
JAPAN
Tel: (+81) (3) 6417-0300
Fax: (+81) (3) 6417-0370

© 2013 Atmel Corporation. All rights reserved. / Rev.: 9520J–AT42–05/2013

Atmel®, Atmel logo and combinations thereof, QTouch®, Adjacent Key Suppression®, AKS®, and others are registered trademarks or trademarks of Atmel Corporation or its subsidiaries. Other terms and product names may be registered trademarks or trademarks of others.

Disclaimer: The information in this document is provided in connection with Atmel products. No license, express or implied, by estoppel or otherwise, to any intellectual property right is granted by this document or in connection with the sale of Atmel products. EXCEPT AS SET FORTH IN THE ATMEL TERMS AND CONDITIONS OF SALES LOCATED ON THE ATMEL WEBSITE, ATMEL ASSUMES NO LIABILITY WHATSOEVER AND DISCLAIMS ANY EXPRESS, IMPLIED OR STATUTORY WARRANTY RELATING TO ITS PRODUCTS INCLUDING, BUT NOT LIMITED TO, THE IMPLIED WARRANTY OF MERCHANTABILITY, FITNESS FOR A PARTICULAR PURPOSE, OR NON-INFRINGEMENT. IN NO EVENT SHALL ATMEL BE LIABLE FOR ANY DIRECT, INDIRECT, CONSEQUENTIAL, PUNITIVE, SPECIAL OR INCIDENTAL DAMAGES (INCLUDING, WITHOUT LIMITATION, DAMAGES FOR LOSS AND PROFITS, BUSINESS INTERRUPTION, OR LOSS OF INFORMATION) ARISING OUT OF THE USE OR INABILITY TO USE THIS DOCUMENT, EVEN IF ATMEL HAS BEEN ADVISED OF THE POSSIBILITY OF SUCH DAMAGES. Atmel makes no representations or warranties with respect to the accuracy or completeness of the contents of this document and reserves the right to make changes to specifications and products descriptions at any time without notice. Atmel does not make any commitment to update the information contained herein. Unless specifically provided otherwise, Atmel products are not suitable for, and shall not be used in, automotive applications. Atmel products are not intended, authorized, or warranted for use as components in applications intended to support or sustain life.

Mouser Electronics

Authorized Distributor

Click to View Pricing, Inventory, Delivery & Lifecycle Information:

Microchip:

AT42QT1110-AU AT42QT1110-MU AT42QT1110-AUR AT42QT1110-MUR

OCEAN CHIPS
Океан Электроники
Поставка электронных компонентов

Компания «Океан Электроники» предлагает заключение долгосрочных отношений при поставках импортных электронных компонентов на взаимовыгодных условиях!

Наши преимущества:

- Поставка оригинальных импортных электронных компонентов напрямую с производств Америки, Европы и Азии, а так же с крупнейших складов мира;
- Широкая линейка поставок активных и пассивных импортных электронных компонентов (более 30 млн. наименований);
- Поставка сложных, дефицитных, либо снятых с производства позиций;
- Оперативные сроки поставки под заказ (от 5 рабочих дней);
- Экспресс доставка в любую точку России;
- Помощь Конструкторского Отдела и консультации квалифицированных инженеров;
- Техническая поддержка проекта, помощь в подборе аналогов, поставка прототипов;
- Поставка электронных компонентов под контролем ВП;
- Система менеджмента качества сертифицирована по Международному стандарту ISO 9001;
- При необходимости вся продукция военного и аэрокосмического назначения проходит испытания и сертификацию в лаборатории (по согласованию с заказчиком);
- Поставка специализированных компонентов военного и аэрокосмического уровня качества (Xilinx, Altera, Analog Devices, Intersil, Interpoint, Microsemi, Actel, Aeroflex, Peregrine, VPT, Syfer, Eurofarad, Texas Instruments, MS Kennedy, Miteq, Cobham, E2V, MA-COM, Hittite, Mini-Circuits, General Dynamics и др.);

Компания «Океан Электроники» является официальным дистрибьютором и эксклюзивным представителем в России одного из крупнейших производителей разъемов военного и аэрокосмического назначения **«JONHON»**, а так же официальным дистрибьютором и эксклюзивным представителем в России производителя высокотехнологичных и надежных решений для передачи СВЧ сигналов **«FORSTAR»**.

AVIC JONHON

«JONHON» (основан в 1970 г.)

Разъемы специального, военного и аэрокосмического назначения:

(Применяются в военной, авиационной, аэрокосмической, морской, железнодорожной, горно- и нефтедобывающей отраслях промышленности)

«FORSTAR» (основан в 1998 г.)

ВЧ соединители, коаксиальные кабели, кабельные сборки и микроволновые компоненты:

(Применяются в телекоммуникациях гражданского и специального назначения, в средствах связи, РЛС, а так же военной, авиационной и аэрокосмической отраслях промышленности).

FORSTAR®

Телефон: 8 (812) 309-75-97 (многоканальный)
Факс: 8 (812) 320-03-32
Электронная почта: ocean@oceanchips.ru
Web: http://oceanchips.ru/
Адрес: 198099, г. Санкт-Петербург, ул. Калинина, д. 2, корп. 4, лит. А