TELAIRE®

HumiTrac™ XR

Telaire® Dew Point, Enthalpy, Wet Bulb, and Temperature Transmitters

Features

- Microprocessor-based signal processing
- Excellent accuracy
- Weather resistant duct and outside air mounting
- Easy to install
- Field-replaceable RH sensor saves time
- Multiple user selectable outputs
- Robust, proven capacitive sensor technology
- Attractive, modern look and rugged packaging
- Versatile temperature measurement
- Temperature compensated
- Low cost of ownership, very economical
- Two-year transmitter warranty and one year sensor warranty
- RoHS compliant

Benefits

- Improves indoor air quality (IAQ)
- Saves energy
- Helps prevent mold growth
- Provides a more comfortable environment
- Helps prevent condensation within a building
- Supplies more useful information on the indoor/outdoor environment to help building operators make better decisions
- Optimizes industrial environments like pharmaceutical plants and clean rooms

Amphenol

Advanced Sensors

Applications

- Energy Management Systems (EMS)
- Enthalpy control
- Hospitals/labs
- Refrigeration control
- Pharmaceutical
- Evaporative cooling decision potential
- Supply air setpoint (condensation prevention)
- Economizer efficiency
- Supermarkets

HumiTrac XR Transmitters are rugged, compact and ideally suited for monitoring dew point, wet bulb, enthalpy or temperature in building automation and process applications. Using a capacitive RH sensor, the units's microprocessor computes the dew point, wet bulb, or enthalpy.

Dew Point temperature is the temperature at which any given volume of air must be cooled in order that water vapor will condense into water. Calculated in this transmitter from relative humidity and dry bulb temperature sensors, the output can be used in a variety of applications. HVAC systems can keep a building in a narrow range of dew point at far less expense and complexity than one, which controls relative humidity in a narrow range. Unlike relative humidity, the dew point is not affected by changes in dry bulb temperature as the air moves through equipment and the building.

Dew point is a measure used in applications for humidity control to avoid condensation of water on cooler surfaces within a building (e.g. windows, refrigeration cases, inside walls, electronic equipment, and ductwork). This type of condensation can lead to discoloration, physical/structural damage, and mold/mildew growth. Dew point control provides a more comfortable environment, energy savings, and better indoor air quality.

Enthalpy is an arbitrary measurement of the relative energy in the air. In this transmitter, it is calculated from the relative humidity and dry bulb temperature measurements. The output is useful in comparing the requisite energy required to heat or cool, and make decisions as to which air stream to use for least energy use to get to design criteria.

Wet Bulb temperature is indicative of a wetted temperature sensor in an air stream. It is the temperature a volume of air would have if cooled adiabatically to saturation at constant pressure by evaporation of water into it, all latent heat being supplied by the volume of air. Wet bulb temperature is determined in this transmitter by calculation from the relative humidity and the ambient dry bulb temperature. Many building specifications are surrounding wet bulb measurement, so this transmitter helps provide a direct signal, reducing computing and offloading calculations.

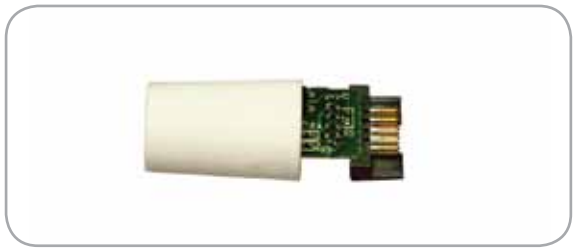

Enhanced Field Serviceability

HumiTrac XR features field-replaceable Relative Humidity (RH) sensor tip module that allows the end user to replace the sensor on-site while maintaining ±2.5% RH accuracy and NIST traceability. The user simply powers off the unit, installs the new sensor module and powers back the unit. This virtually eliminates the need for time consuming and costly factory calibration, while reducing downtime during service intervals to near zero.

Unsurpassed Sensor Performance

HumiTrac XR utilizes a rugged capacitive sensor that provides full-scale 0-99% RH measurement with unsurpassed response times, linearity and stability. Recovery to condensation and chemicals is excellent and an integrated filter, plus conformal-coated module electronics ensure long life. All sensors undergo a ten hour digital calibration, certified against a primary NIST reference standard. Signal conditioned temperature versions maintain specified RH accuracy across the full operating range of -40°F to 140°F (-40°C to 60°C).

Maximum Flexibility

HumiTrac XR is designed to be highly configurable in the field or in your warehouse. By minimizing the necessary number of configurations, we reduce distributor inventory costs and provides maximum flexibility to the installer. All versions feature field-selectable outputs (0 to 5V, 0 to 10V, 4 to 20mA). Simple adjustment of slide switches is all that is required. Signal-conditioned temperature versions are available scaled from -20°F to 120°F (-28.8°C to 49°C) for duct mount and outside air configurations, or 40°F to 90°F (4.4 to 32.2°C) for space mount configuration. Custom ranges are available upon request for high volume applications.

HumiTrac XR is offered in wall mount, duct mount and outdoor air configurations

Rugged, Attractive Enclosures

All HumiTrac XR configurations feature rugged flame retardant, UL-94V ABS plastic. Duct and outdoor air versions provide excellent weather resistance (IP42 rated). Special care has been taken in the design of the wall mount enclosure to provide enhanced airflow, increasing sensor response time and virtually eliminating the potential of “self-heating” by transmitter electronics that can lead to decreased accuracy measurements.

Simple, Fast Installation

All HumiTrac XR models feature large removable, pluggable terminal blocks, eliminating the need to wire in a confined space and allow the unit to be pre-wired separate from the electronics, an especially attractive feature in unfinished construction, where exposed sensors and electronics could be damaged by moisture, drywall dust and paint. All models incorporate a retaining wire that attaches the cover to the base, allowing the installer to wire the unit without using an extra hand to hold the cover.

Lowest Cost of Ownership

With a two-year warranty*, simplified inventory management, reduced installation times and field-serviceability, HumiTrac XR sets the standard in reduced cost of ownership and performance-to-price ratio.

**Transmitter only, one year warranty on replaceable sensor.*

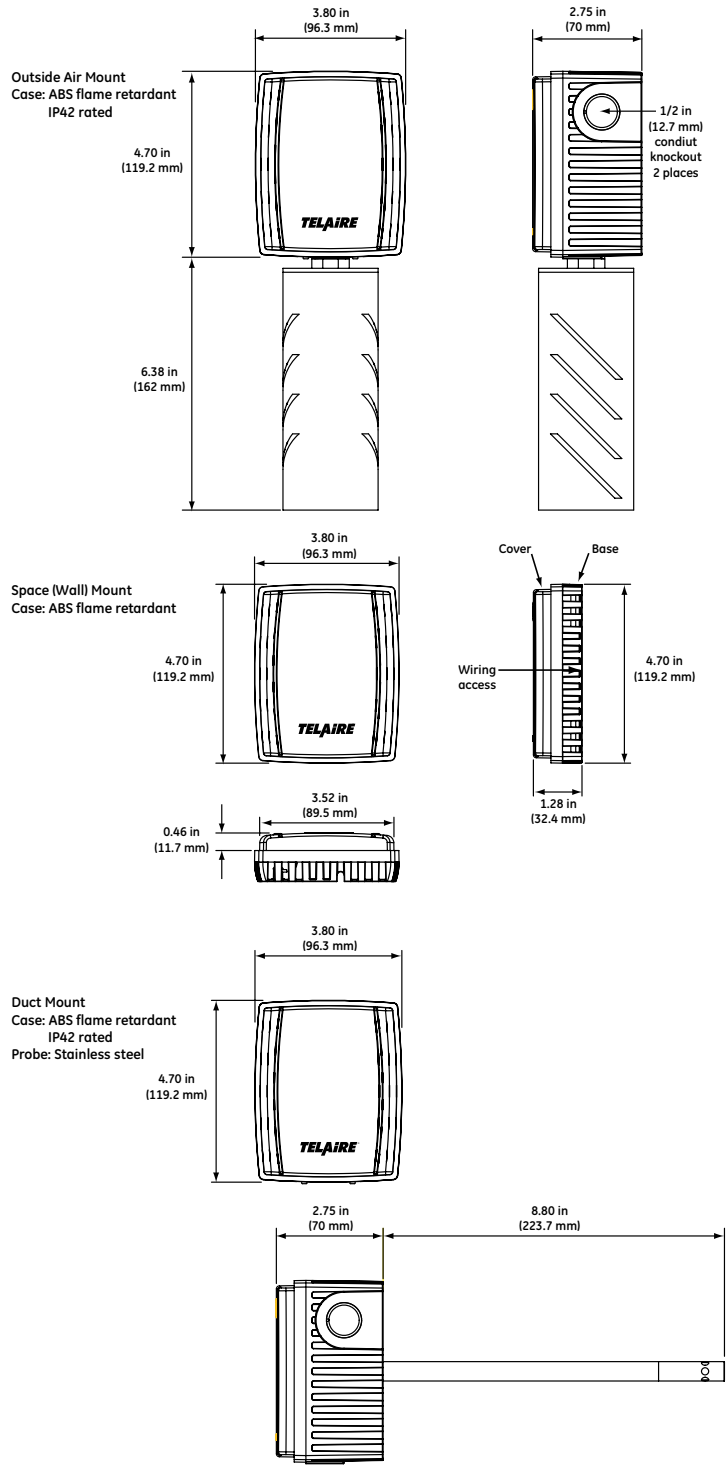

Outside Air Mount
Case: ABS flame retardant IP42 rated

Space (Wall) Mount
Case: ABS flame retardant

Duct Mount
Case: ABS flame retardant IP42 rated
Probe: Stainless steel

HumiTrac XR Specifications

Operating Range
- -40°F to 140°F (-40°C to 60°C)
- 0% to 99% RH (non-condensing)

Storage Temperature
-67°F to 185°F (-55°C to 85°C)

Sensing Element
Capacitive polymer sensor

Long Term Stability
Less than 1% drift per year, typical

Temperature Effect**
Delta %RH = (0.0014 x %RH + 0.1325) x T°C - (0.0317 x %RH + 3.0876)
***Not applicable to signal-conditioned temperature units.*

Signal Outputs
4 to 20mA, 0 to 5V or 0 to 10V (user selectable)

Space (Wall Mount) Range
Dew Point 40° to 90°F (4.4 ° to 32.2°C)
Enthalpy 0-50 BTU/lb (0 to 116.3 kJ/kg)
Wet Bulb 40° to 90°F (4.4 ° to 32.2°C)
Dry Bulb 40° to 90°F (4.4 ° to 32.2°C)

Duct Mount/Outside Air Range
Dew Point -20° to 120°F (-28.8° to 49°C)
Enthalpy 0-50 BTU/lb (0 to 116.3 kJ/kg)
Wet Bulb 0° to 100°F (-17.8° to 37.8°C)
Dry Bulb -20° to 120°F (-28.8° to 49°C)

Accuracy at 77°F (25°C) at RH 40-90%
Dew Point ±1.8°F (±1°C)
Enthalpy ±2 BTU/lb (±4.7 kJ/kg)
Wet Bulb ±3°F (±1.7°C)
Dry Bulb ±0.5°C (±0.9°F)

Power Requirements

Supply Voltage
12 to 30 VDC

Maximum Load (current output only)
$$\Omega = \frac{\text{Supply Voltage-10}}{0.02}$$

General

Protection
IP42 rating for Duct Mount and Outside Air Transmitters

Ordering Information

Model	Range	Product Description
Space (Wall Mount)		
HUMI-DP-XR-S	40° to 90°F (4.4° to 32.2°C)	DEW POINT TRANSMITTER- SPACE MOUNT
HUMI-EN-XR-S	0-50 BTU/lb	ENTHALPY TRANSMITTER- SPACE MOUNT
HUMI-WB-XR-S	40° to 90°F (4.4° to 32.2°C)	WET BULB TRANSMITTER- SPACE MOUNT
Duct Mount		
HUMI-DP-XR-D	-20° to 120°F (-28.8° to 49°C)	DEW POINT TRANSMITTER- DUCT MOUNT
HUMI-EN-XR-D	0-50 BTU/lb	ENTHALPY TRANSMITTER- DUCT MOUNT
HUMI-WB-XR-D	0° to 100°F (-17.8° to 37.8°C)	WET BULB TRANSMITTER- DUCT MOUNT
Outside Air		
HUMI-DP-XR-O	-20° to 120°F (-28.8° to 49°C)	DEW POINT TRANSMITTER-OPEN AIR
HUMI-EN-XR-O	0-50 BTU/lb	ENTHALPY TRANSMITTER- OPEN AIR
HUMI-WB-XR-O	0° to 100°F (-17.8° to 37.8°C)	WET BULB TRANSMITTER- OPEN AIR

Amphenol
Advanced Sensors

www.amphenol-sensors.com

© 2016 Amphenol Corporation. All Rights Reserved. Specifications are subject to change without notice. Other company names and product names used in this document are the registered trademarks or trademarks of their respective owners.

AAS-920-486D - 02/2016

Mouser Electronics

Authorized Distributor

Click to View Pricing, Inventory, Delivery & Lifecycle Information:

Amphenol:
HUMI-DP-XR-D HUMI-WB-XR-D HUMI-EN-XR-D-N HUMI-WB-XR-S HUMI-EN-XR-O HUMI-DP-XR-S-N HUMI-WB-XR-O-N HUMI-WB-XR-O HUMI-DP-XR-O-N HUMI-DP-XR-D-N HUMI-DP-XR-O HUMI-WB-XR-D-N HUMI-DP-XR-S HUMI-EN-XR-S HUMI-EN-XR-S-N HUMI-EN-XR-O-N HUMI-EN-XR-D HUMI-WB-XR-S-N

OCEAN CHIPS
Океан Электроники
Поставка электронных компонентов

Компания «Океан Электроники» предлагает заключение долгосрочных отношений при поставках импортных электронных компонентов на взаимовыгодных условиях!

Наши преимущества:

- Поставка оригинальных импортных электронных компонентов напрямую с производств Америки, Европы и Азии, а так же с крупнейших складов мира;
- Широкая линейка поставок активных и пассивных импортных электронных компонентов (более 30 млн. наименований);
- Поставка сложных, дефицитных, либо снятых с производства позиций;
- Оперативные сроки поставки под заказ (от 5 рабочих дней);
- Экспресс доставка в любую точку России;
- Помощь Конструкторского Отдела и консультации квалифицированных инженеров;
- Техническая поддержка проекта, помощь в подборе аналогов, поставка прототипов;
- Поставка электронных компонентов под контролем ВП;
- Система менеджмента качества сертифицирована по Международному стандарту ISO 9001;
- При необходимости вся продукция военного и аэрокосмического назначения проходит испытания и сертификацию в лаборатории (по согласованию с заказчиком);
- Поставка специализированных компонентов военного и аэрокосмического уровня качества (Xilinx, Altera, Analog Devices, Intersil, Interpoint, Microsemi, Actel, Aeroflex, Peregrine, VPT, Syfer, Eurofarad, Texas Instruments, MS Kennedy, Miteq, Cobham, E2V, MA-COM, Hittite, Mini-Circuits, General Dynamics и др.);

Компания «Океан Электроники» является официальным дистрибьютором и эксклюзивным представителем в России одного из крупнейших производителей разъемов военного и аэрокосмического назначения **«JONHON»**, а так же официальным дистрибьютором и эксклюзивным представителем в России производителя высокотехнологичных и надежных решений для передачи СВЧ сигналов **«FORSTAR»**.

AVIC JONHON

«JONHON» (основан в 1970 г.)

Разъемы специального, военного и аэрокосмического назначения:

(Применяются в военной, авиационной, аэрокосмической, морской, железнодорожной, горно- и нефтедобывающей отраслях промышленности)

«FORSTAR» (основан в 1998 г.)

ВЧ соединители, коаксиальные кабели, кабельные сборки и микроволновые компоненты:

(Применяются в телекоммуникациях гражданского и специального назначения, в средствах связи, РЛС, а так же военной, авиационной и аэрокосмической отраслях промышленности).

FORSTAR®

Телефон: 8 (812) 309-75-97 (многоканальный)
Факс: 8 (812) 320-03-32
Электронная почта: ocean@oceanchips.ru
Web: http://oceanchips.ru/
Адрес: 198099, г. Санкт-Петербург, ул. Калинина, д. 2, корп. 4, лит. А