2089 Series

Two-, Four-, & Eight-Way Isolated Power Dividers Wilkinson

Rev. V3

Features

- Excellent Amplitude and Phase Balance
- High Isolation between Output Ports
- Low VSWR, Small Size and Light Weight
- Octave and Multi-Octave Frequency Coverage
- Power: 10 Watts Input Maximum with Matched Terminations

Description and Applications

This series of two-way, in-phase stripline power dividers demonstrates excellent performance as well as small size and light weight. These octave and multi-octave power dividers have high isolation, low VSWR and excellent amplitude and phase balance.

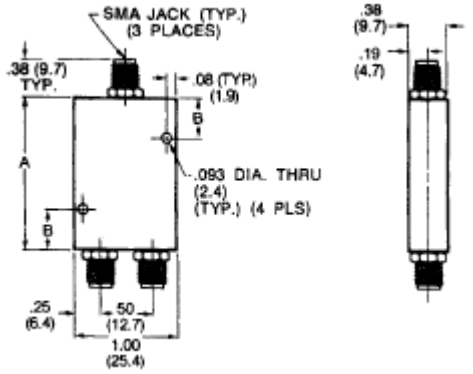

Note: All dimensions are ± .020, except mounting hole diameters (± .005) and mounting hole location (± .010) .

Typical Performance Part No. 2089-6208-00

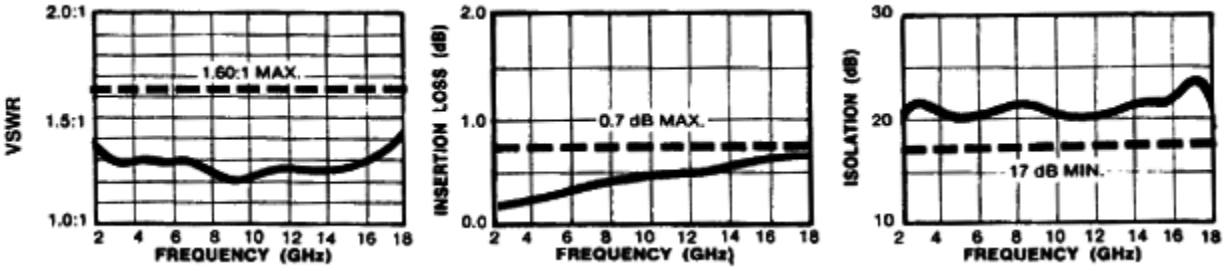

Two-Way Isolated Power Divider Specifications

Part No.	Frequency Range (GHz)	VSWR (max.)	Isolation dB (min.)	Insertion Loss dB (max.)	Output Unbalance		Maximum Input Power* (watts)	Size, Inches (mm)		Weight	
					Amp. (dB)	Phase (deg.)		A	B	oz.	g
2089-6201-00	1.0-2.0	1.25	20	0.25	0.2	4.0	2.0	2.0 (50.8)	0.5 (12.7)	1.5	43
2089-6202-00	2.0-4.0	1.35	20	0.25	0.2	4.0	2.0	2.0 (50.8)	0.5 (12.7)	1.5	43
2089-6203-00	4.0-8.0	1.35	20	0.3	0.2	6.0	2.0	1.38 (35)	0.4 (10.2)	1.2	35
2089-6204-00	8.0-12.4	1.60	20	0.4	0.25	6.0	2.0	1.38 (35)	0.4 (10.2)	1.2	35
2089-6205-00	12.4-18.0	1.70	17	0.6	0.25	6.0	3.0	1.38 (35)	0.4 (10.2)	1.2	35
2089-6206-00	0.5-2.0	1.30	20	0.4	0.2	4.0	4.0	2.8 (71.2)	1.4 (35.6)	2.0	57
2089-6207-00	2.0-8.0	1.50	18	0.4	0.25	8.0	4.0	2.25 (57.2)	0.5 (12.7)	1.3	37
2089-6208-00	2.0-18.0	1.60	17	1.0	0.25	8.0	10.0	2.25 (57.2)	0.5 (12.7)	1.3	37
2089-6209-00	4.0-18.0	1.60	17	0.6	0.25	8.0	4.0	1.63 (41.4)	0.5 (12.7)	1.3	37
2089-6210-00	7.0-18.0	1.70	17	0.6	0.25	8.0	3.0	1.38 (35)	0.4 (10.2)	1.2	35

* Maximum input power with output loads of VSWR ≤ 2.0:1. Derate to 10% of listed value when arbitrarily terminated.

ADVANCED: Data Sheets contain information regarding a product M/A-COM Technology Solutions is considering for development. Performance is based on target specifications, simulated results, and/or prototype measurements. Commitment to develop is not guaranteed.
PRELIMINARY: Data Sheets contain information regarding a product M/A-COM Technology Solutions has under development. Performance is based on engineering tests. Specifications are typical. Mechanical outline has been fixed. Engineering samples and/or test data may be available. Commitment to produce in volume is not guaranteed.

• **North America** Tel: 800.366.2266 • **Europe** Tel: +353.21.244.6400
• **India** Tel: +91.80.4155721 • **China** Tel: +86.21.2407.1588
Visit www.macomtech.com for additional data sheets and product information.

M/A-COM Technology Solutions Inc. and its affiliates reserve the right to make changes to the product(s) or information contained herein without notice.

Two-, Four-, & Eight-Way Isolated Power Dividers Wilkinson

Rev. V3

Features

- Octave and Multi-Octave Frequency Coverage
- Low Insertion Loss
- Excellent Phase Balance
- High Isolation between Output Ports
- Low VSWR
- Power: 20 Watts Maximum

Description and Applications

These four-way in-phase power dividers combine excellent strip transmission line design techniques with small size and light weight and still achieve superb performance over wide multi-octave frequency ranges as well as over single octave bandwidths. These units may be used in reverse to combine in-phase signals applied to them. They can be custom designed to your particular application.

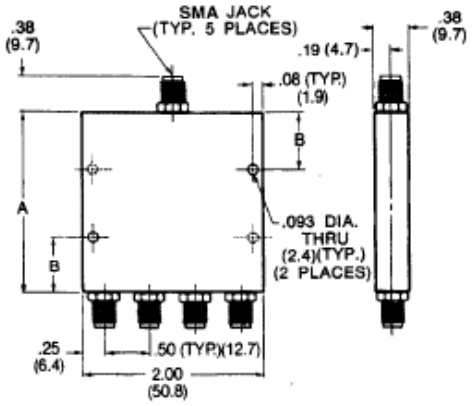

Note: All dimensions are ± .020, except mounting hole diameters (± .005) and mounting hole location (± .010) .

Typical Performance Part No. 2089-6408-00

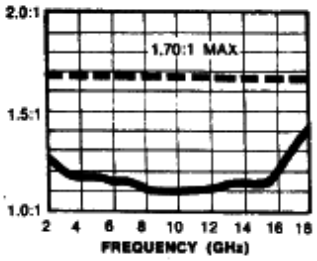

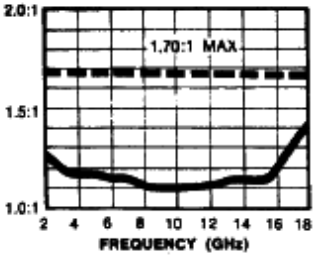

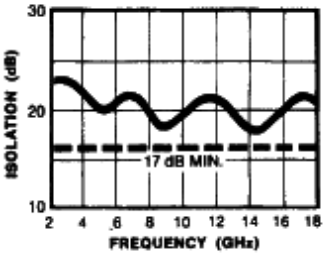

Four-Way Isolated Power Divider Specifications

Part No.	Frequency Range (GHz)	VSWR (max.)	Isolation dB (min.)	Insertion Loss dB (max.)	Output Unbalance		Maximum Input Power* (watts)	Size, Inches (mm)		Weight	
					Amp. (dB)	Phase (deg.)		A	B	oz.	g
2089-6401-00**	1.0-2.0	1.35	20	0.50	0.40	6	4.0	3.0 (76.2)	0.63 (15.9)	4.0	115
2089-6402-00	2.0-4.0	1.35	20	0.50	0.40	6	4.0	2.0 (50.8)		2.8	80
2089-6403-00	4.0-8.0	1.50	20	0.50	0.40	8	4.0	2.0 (50.8)		2.8	80
2089-6404-00	8.0-12.4	1.70	18	0.75	0.50	8	4.0	2.0 (50.8)		2.8	80
2089-6405-00	12.4-18.0	1.70	15	1.20	0.50	8	6.0	2.0 (50.8)		2.8	80
2089-6406-00	0.5-2.0	1.45	20	0.70	0.40	6	4.0	2.92 (74.2)		4.0	115
2089-6407-00	2.0-8.0	1.60	18	0.80	0.50	12	8.0	4.0 (102)		5.2	149
2089-6408-00	2.0-18.0	1.70	17	1.80	0.50	12	20.0	3.0 (76.2)		4.0	115
2089-6409-00	4.0-18.0	1.70	15	1.20	0.50	12	8.0	2.0 (50.8)		2.8	80
2089-6410-00	7.0-18.0	1.60	15	1.20	0.50	12	6.0	2.0 (50.8)		2.8	80

* Maximum input power with output loads of VSWR ≤ 2.0:1. Derate to 10% of listed value when arbitrarily terminated.
** These units have four mounting holes symmetrically located as shown.

ADVANCED: Data Sheets contain information regarding a product M/A-COM Technology Solutions is considering for development. Performance is based on target specifications, simulated results, and/or prototype measurements. Commitment to develop is not guaranteed.
PRELIMINARY: Data Sheets contain information regarding a product M/A-COM Technology Solutions has under development. Performance is based on engineering tests. Specifications are typical. Mechanical outline has been fixed. Engineering samples and/or test data may be available. Commitment to produce in volume is not guaranteed.

• **North America** Tel: 800.366.2266 • **Europe** Tel: +353.21.244.6400
• **India** Tel: +91.80.4155721 • **China** Tel: +86.21.2407.1588
Visit www.macomtech.com for additional data sheets and product information.

M/A-COM Technology Solutions Inc. and its affiliates reserve the right to make changes to the product(s) or information contained herein without notice.

2089 Series

Two-, Four-, & Eight-Way Isolated Power Dividers Wilkinson

Rev. V3

Features

- Octave and Multi-Octave Frequency Coverage
- Excellent Amplitude and Phase Balance
- Low Insertion Loss
- Low VSWR

Description and Applications

These eight-way in-phase power divides combine reliable strip transmission line design techniques with small size and light weight to achieve excellent performance over octave and multi-octave frequency ranges. They may also be used to combine in-phase signals applied at the outputs. SMA female connectors are standard.

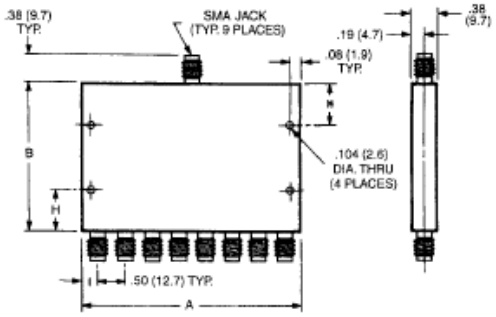

All dimensions are ± .020, except mounting hole diameters (± .005) and mounting hole location (± .010) .

Typical Performance Part No. 2089-6803-00

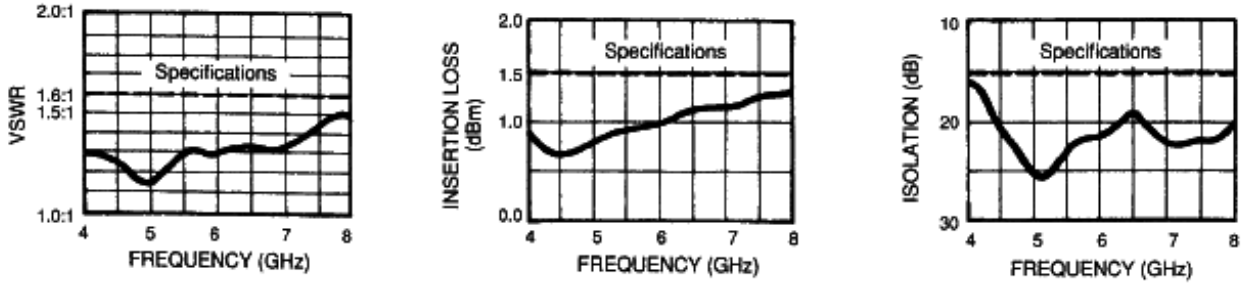

Eight-Way Isolated Power Divider Specifications

Part No.	Frequency Range (GHz)	VSWR (max.)	Isolation dB (min.)	Insertion Loss dB (max.)	Output Unbalance		Maximum Input Power* (watts)	Size, Inches				Weight (NOM.) oz.
					Amp. (dB)	Phase (deg.)		A	B	H	I	
2089-6801-00	1.0-2.0	1.5:1	20	1.0	0.8	8	6.0	4.5	5.0	1.0	0.50	15
2089-6802-00	2.0-4.0	1.5:1	18	1.0	0.8	10	6.0	4.0	2.0	0.5	0.25	12
2089-6803-00	4.0-8.0	1.6:1	15	1.5	0.8	16	6.0	4.0	2.0	0.5	0.25	12
2089-6804-00	8.0-12.4	1.7:1	15	1.7	0.8	16	6.0	4.0	2.0	0.5	0.25	12
2089-6805-00	12.4-18.0	1.7:1	15	2.2	0.8	24	10.0	4.0	2.0	0.5	0.25	12
2089-6806-00	0.5-2.0	1.5:1	20	1.5	0.8	8	12.0	4.5	5.0	1.0	0.50	15
2089-6807-00	2.0-8.0	1.6:1	15	2.0	1.2	16	12.0	4.0	2.0	0.5	0.25	12
2089-6808-00	2.0-18.0	1.8:1	15	3.3	1.8	24	30.0	4.5	5.0	1.0	0.50	15
2089-6810-00	7.0-18.0	1.8:1	15	2.5	1.5	24	10.0	4.0	2.0	0.5	0.25	12

* Maximum input power with output loads of VSWR $\leq$ 2.0:1. Derate to 10% of listed value when arbitrarily terminated.

ADVANCED: Data Sheets contain information regarding a product M/A-COM Technology Solutions is considering for development. Performance is based on target specifications, simulated results, and/or prototype measurements. Commitment to develop is not guaranteed.
PRELIMINARY: Data Sheets contain information regarding a product M/A-COM Technology Solutions has under development. Performance is based on engineering tests. Specifications are typical. Mechanical outline has been fixed. Engineering samples and/or test data may be available. Commitment to produce in volume is not guaranteed.

• **North America** Tel: 800.366.2266 • **Europe** Tel: +353.21.244.6400
• **India** Tel: +91.80.4155721 • **China** Tel: +86.21.2407.1588
Visit www.macomtech.com for additional data sheets and product information.

M/A-COM Technology Solutions Inc. and its affiliates reserve the right to make changes to the product(s) or information contained herein without notice.

OCEAN CHIPS
Океан Электроники
Поставка электронных компонентов

Компания «Океан Электроники» предлагает заключение долгосрочных отношений при поставках импортных электронных компонентов на взаимовыгодных условиях!

Наши преимущества:

- Поставка оригинальных импортных электронных компонентов напрямую с производств Америки, Европы и Азии, а так же с крупнейших складов мира;
- Широкая линейка поставок активных и пассивных импортных электронных компонентов (более 30 млн. наименований);
- Поставка сложных, дефицитных, либо снятых с производства позиций;
- Оперативные сроки поставки под заказ (от 5 рабочих дней);
- Экспресс доставка в любую точку России;
- Помощь Конструкторского Отдела и консультации квалифицированных инженеров;
- Техническая поддержка проекта, помощь в подборе аналогов, поставка прототипов;
- Поставка электронных компонентов под контролем ВП;
- Система менеджмента качества сертифицирована по Международному стандарту ISO 9001;
- При необходимости вся продукция военного и аэрокосмического назначения проходит испытания и сертификацию в лаборатории (по согласованию с заказчиком);
- Поставка специализированных компонентов военного и аэрокосмического уровня качества (Xilinx, Altera, Analog Devices, Intersil, Interpoint, Microsemi, Actel, Aeroflex, Peregrine, VPT, Syfer, Eurofarad, Texas Instruments, MS Kennedy, Miteq, Cobham, E2V, MA-COM, Hittite, Mini-Circuits, General Dynamics и др.);

Компания «Океан Электроники» является официальным дистрибьютором и эксклюзивным представителем в России одного из крупнейших производителей разъемов военного и аэрокосмического назначения **«JONHON»**, а так же официальным дистрибьютором и эксклюзивным представителем в России производителя высокотехнологичных и надежных решений для передачи СВЧ сигналов **«FORSTAR»**.

AVIC JONHON

«JONHON» (основан в 1970 г.)

Разъемы специального, военного и аэрокосмического назначения:

(Применяются в военной, авиационной, аэрокосмической, морской, железнодорожной, горно- и нефтедобывающей отраслях промышленности)

«FORSTAR» (основан в 1998 г.)

ВЧ соединители, коаксиальные кабели, кабельные сборки и микроволновые компоненты:

(Применяются в телекоммуникациях гражданского и специального назначения, в средствах связи, РЛС, а так же военной, авиационной и аэрокосмической отраслях промышленности).

FORSTAR®

Телефон: 8 (812) 309-75-97 (многоканальный)
Факс: 8 (812) 320-03-32
Электронная почта: ocean@oceanchips.ru
Web: http://oceanchips.ru/
Адрес: 198099, г. Санкт-Петербург, ул. Калинина, д. 2, корп. 4, лит. А