HCPL-5150 and HCPL-5151, DLA SMD 5962-04205 [1]

0.5-Amp Output Current IGBT Gate Drive Hermetic Optocoupler

Data Sheet

Description

The HCPL-515x contains a GaAsP LED optically coupled to an integrated circuit with a power output stage. The device is ideally suited for driving power IGBTs and MOSFETs used in motor control inverter applications. The high operating voltage range of the output stage provides the drive voltages required by gate controlled devices. The voltage and current supplied by this optocoupler makes it ideally suited for directly driving IGBTs with ratings up to 1200V/50A. For IGBTs with higher ratings, the HCPL-515x can be used to drive a discrete power stage, which drives the IGBT gate.

The products are capable of operation and storage over the full military temperature range and can be purchased as either Commercial product, with full MIL-PRF-38534 Class H testing, or from Defense Supply Center Columbus (DLA) Standard Microcircuit Drawing (SMD) 5962-04205. All devices are manufactured and tested on a MIL-PRF-38534 certified line, and Class H devices are included in the DLA Qualified Manufacturers List, QML-38534 for Hybrid Microcircuits.

CAUTION It is advised that normal static precautions be taken in handling and assembly of this component to prevent damage and/or degradation which may be induced by ESD.

1. See Selection Guide — Lead Configuration Options for available extensions.

Features

- Performance Guaranteed over Full Military Temperature Range: –55°C to +125°C
- Manufactured and tested on a MIL-PRF-38534 certified line
- Hermetically sealed packages
- Dual marked with device part number and DLA Standard Microciruit Drawing (SMD)
- QML-38534
- HCPL-3150 function compatibility
- 0.5A minimum peak output current
- 10 kV/µs minimum common mode rejection (CMR) at V_{CM} = 1000V
- 1.0V maximum low level output voltage (V_{OL}) eliminates need for negative gate drive
- I_{CC} = 5 mA maximum supply current
- Undervoltage lock-out protection (UVLO) with hysteresis
- Wide operating V_{CC} range: 15V to 30V
- 500-ns maximum propagation delay
- ±0.35-ms maximum delay between devices

Applications

- Industrial and military environments
- High reliability systems
- Harsh industrial environments
- Transportation, medical, and life critical systems
- Isolated IGBT/MOSFET gate drive
- AC and brushless DC motor drives
- Industrial inverters
- Switch mode power supplies (SMPS)
- Uninterruptible power supplies (UPS)

Schematic Diagram

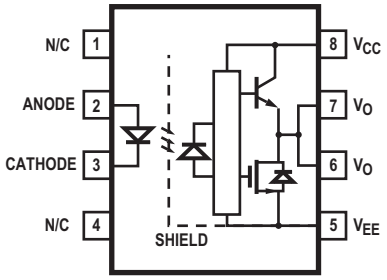

Truth Table

LED	$V_{CC} - V_{EE}$ Positive Going (i.e., Turn-ON)	$V_{CC} - V_{EE}$ Negative Going (i.e., Turn-OFF)	V_O
OFF	0V to 30V	0V to 30V	LOW
ON	0V to 11V	0V to 9.5V	LOW
ON	11V to 13.5V	9.5V to 12V	TRANSITION
ON	13.5V to 30V	12V to 30V	HIGH

NOTE A 0.1-µF bypass capacitor must be connected between pins 5 and 8.

Selection Guide — Lead Configuration Options

Part Number and Options	
Commercial	HCPL-5150
MIL-PRF-38534, Class H	HCPL-5151
Standard Lead Finish	Gold Plate[a]
Solder Dipped[b]	Option -200
Butt Cut/Gold Plate[a]	Option -100
Gull Wing/Soldered[b]	Option -300
SMD Part Number	
Prescript for all below	5962-
Gold Plate[a]	0420501HPC
Solder Dipped[b]	0420501HPA
Butt Cut/Gold Plate[a]	0420501HYC
Butt Cut/Soldered[b]	0420501HYA
Gull Wing/Soldered[b]	0420501HXA

a. Gold Plate lead finish: Maximum gold thickness of leads is <100 micro inches. Typical is 60 to 90 micro inches.

b. Solder lead finish: Sn63/Pb37.

Outline Drawing

8-Pin DIP Through Hole

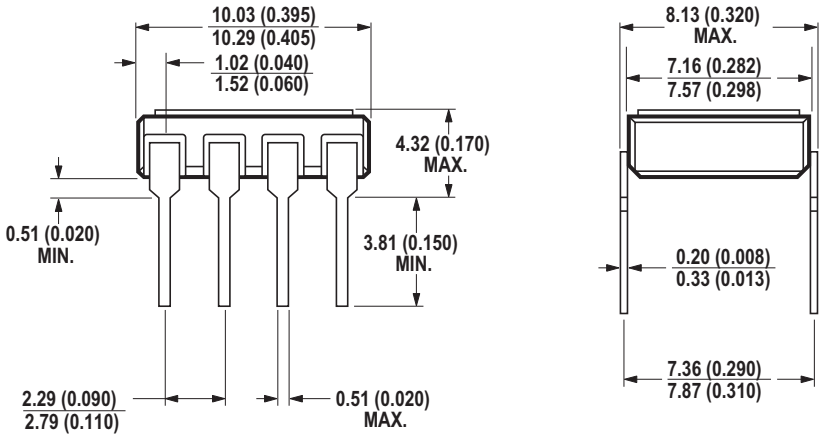

NOTE: DIMENSIONS IN MILLIMETERS (INCHES).

Device Marking

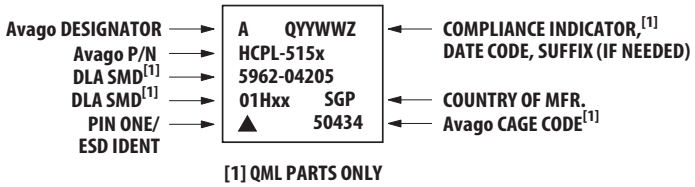

[1] QML PARTS ONLY

Hermetic Optocoupler Options

Option	Description
100	Surface-mountable hermetic optocoupler with leads trimmed for butt joint assembly. This option is available on Commercial, Class H product. 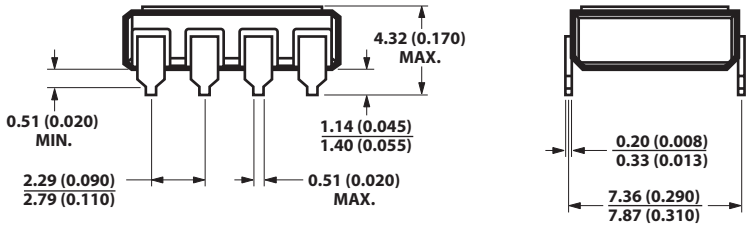 NOTE: DIMENSIONS IN MILLIMETERS (INCHES).
200	Lead finish is solder dipped rather than gold plated. This option is available on Commercial, Class H product. DLA Drawing (SMD) part numbers contain provisions for lead finish.
300	Surface-mountable hermetic optocoupler with leads cut and bent for gull wing assembly. This option is available on Commercial, Class H product. This option has solder-dipped leads. 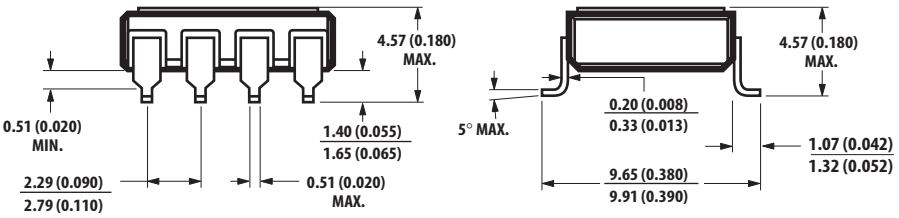 NOTE: DIMENSIONS IN MILLIMETERS (INCHES).

Absolute Maximum Ratings

Parameter	Symbol	Min	Max	Unit	Notes
Storage Temperature	T_S	–65	+150	°C	
Operating Temperature	T_A	–55	+125	°C	
Case Temperature	T_C	—	+145	°C	
Junction Temperature	T_J	—	+150	°C	
Lead Solder Temperature		—	260 for 10s	°C	
Average Input Current	$I_{F\ AVG}$	—	25	mA	a
Peak Transient Input Current (<1-µs pulse width, 300 pps)	$I_{F\ PK}$	—	1.0	A	
Reverse Input Voltage	V_R	—	5	V	
High Peak Output Current	$I_{OH\ (PEAK)}$	—	0.6	A	b
Low Peak Output Current	$I_{OL\ (PEAK)}$	—	0.6	A	b
Supply Voltage	$(V_{CC} – V_{EE})$	0	35	V	
Output Voltage	$V_{O\ (PEAK)}$	0	V_{CC}	V	
Input Power Dissipation	P_E	—	45	mW	a
Output Power Dissipation	P_O	—	250	mW	c
Total Power Dissipation	P_T	—	295	mW	d

a. No derating required with the typical case-to-ambient thermal resistance (θ_{CA} = 140°C/W). Refer to Figure 35.

b. Maximum pulse width = 10 µs, maximum duty cycle = 0.2%. This value is intended to allow for component tolerances for designs with I_O peak minimum = 0.5A. See Applications Information for additional details on limiting I_{OH} peak.

c. Derate linearly above 102°C free air temperature at a rate of 6 mW/°C with the typical case-to-ambient thermal resistance (θ_{CA} = 140°C/W). Refer to Figure 36.

d. Derate linearly above 102°C free air temperature at a rate of 6 mW/°C with the typical case-to-ambient thermal resistance (θ_{CA} = 140°C/W). Refer to Figure 35 and Figure 36.

ESD Classification

MIL-STD-883, Method 3015	▲, Class 1

Recommended Operating Conditions

Parameter	Symbol	Min	Max	Unit
Power Supply Voltage	$(V_{CC} – V_{EE})$	15	30	V
Input Current (ON)	$I_{F(ON)}$	10	18	mA
Input Voltage (OFF)	$V_{F(OFF)}$	–3.0	0.8	V
Operating Temperature	T_A	–55	125	°C

Electrical Specifications (DC)

Over recommended operating conditions (T_A = –55°C to +125°C, $I_{F(ON)}$ = 10 mA to 18 mA, $V_{F(OFF)}$ = –3.0V to 0.8V, V_{CC} = 15V to 30V, V_{EE} = Ground) unless otherwise specified.

Parameter	Symbol	Test Conditions	Group A Subgroups[a]	Limits			Unit	Fig.	Notes
				Min	Typ[b]	Max			
High Level Output Current	I_{OH}	$V_O = (V_{CC} – 4V)$	1, 2, 3	0.1	0.4	—	A	2, 3, 17	c
		$V_O = (V_{CC} – 15V)$		0.5	—	—			d
Low Level Output Current	I_{OL}	$V_O = (V_{EE} + 2.5V)$	1, 2, 3	0.1	0.6	—	A	5, 6, 18	c
		$V_O = (V_{EE} + 15V)$		0.5	—	—			d
High Level Output Voltage	V_{OH}	I_O = –100 mA	1, 2, 3	$(V_{CC} – 4)$	$(V_{CC} – 3)$	—	V	1, 3, 19	e, f
Low Level Output Voltage	V_{OL}	I_O = 100 mA	1, 2, 3	—	0.4	1.0	V	4, 6, 20	
High Level Supply Current	I_{CCH}	Output Open, I_F = 10 mA to 18 mA	1, 2, 3	—	2.5	5.0	mA	7, 8	
Low Level Supply Current	I_{CCL}	Output Open, V_F = –3.0V to +0.8V	1, 2, 3	—	2.7	5.0	mA		
Threshold Input Current Low to High	I_{FLH}	I_O = 0 mA, V_O > 5V	1, 2, 3	—	2.6	9.0	mA	9, 15, 21	
Threshold Input Voltage High to Low	V_{FHL}		1, 2, 3	0.8	—	—	V		
Input Forward Voltage	V_F	I_F = 10 mA	1, 2, 3	1.2	1.5	1.8	V	16	
Temperature Coefficient of Forward Voltage	$\Delta V_F/\Delta T_A$	I_F = 10 mA		—	–1.6	—	mV/°C		
Input Reverse Breakdown Voltage	BV_R	I_R = 10 µA	1, 2, 3	5	—	—	V		
Input Capacitance	C_{IN}	f = 1 MHz, V_F = 0 V		—	80	—	pF		
UVLO Threshold	V_{UVLO+}	V_O > 5 V, I_F = 10 mA	1, 2, 3	11.0	12.3	13.5	V	22, 37	
	$V_{UVLO–}$		1, 2, 3	9.5	10.7	12.0			
UVLO Hysteresis	$UVLO_{HYS}$			—	1.6	—			

a. Commercial parts receive 100% testing at 25°C (Subgroups 1 and 9). SMD and Class H parts receive 100% testing at 25°C, 125°C, and –55°C (Subgroups 1 and 9, 2 and 10, 3 and 11, respectively).

b. All typical values at T_A = 25°C and $V_{CC} – V_{EE}$ = 30V, unless otherwise noted.

c. Maximum pulse width = 50 µs, maximum duty cycle = 0.5%.

d. Maximum pulse width = 10 µs, maximum duty cycle = 0.2%. This value is intended to allow for component tolerances for designs with I_O peak minimum = 0.5A. See Applications Information for additional details on limiting I_{OH} peak.

e. In this test, V_{OH} is measured with a dc load current. When driving capacitive loads, V_{OH} approaches V_{CC} as I_{OH} approaches zero amps.

f. Maximum pulse width = 1 ms, maximum duty cycle = 20%.

Switching Specifications (AC)

Over recommended operating conditions (T_A = –55°C to +125°C, $I_{F(ON)}$ = 10 mA to 18 mA, $V_{F(OFF)}$ = –3.0V to 0.8V, V_{CC} = 15V to 30V, V_{EE} = Ground) unless otherwise specified.

Parameter	Symbol	Test Conditions	Group A Subgroups[a]	Limits			Unit	Fig.	Notes
				Min	Typ[b]	Max			
Propagation Delay Time to High Output Level	t_{PLH}	R_g = 47Ω, C_g = 3 nF, f = 10 kHz, Duty Cycle = 50%	9, 10, 11	0.10	0.30	0.50	µs	10, 11, 12, 13, 14, 23	c
Propagation Delay Time to Low Output Level	t_{PHL}		9, 10, 11	0.10	0.30	0.50	µs		
Pulse Width Distortion	PWD		9, 10, 11	—	—	0.3	µs		d
Propagation Delay Difference Between Any Two Parts	PDD ($t_{PHL} – t_{PLH}$)		9, 10, 11	–0.35	—	0.35	µs	33, 34	e
Rise Time	t_r			—	0.1	—	µs	23	
Fall Time	t_f			—	0.1	—	µs		
UVLO Turn On Delay	$t_{UVLO\ ON}$	V_O > 5V, I_F = 10 mA		—	0.8	—	µs	22	
UVLO Turn Off Delay	$t_{UVLO\ OFF}$	V_O < 5V, I_F = 10 mA		—	0.6	—			
Output High-Level Common Mode Transient Immunity	$\|CM_H\|$	I_F = 10 mA, V_{CC} = 30V V_{CM} = 1000V, T_A = 25°C	9	10	—	—	kV/µs	24	f, g, h
Output Low-Level Common Mode Transient Immunity	$\|CM_L\|$	V_{CM} = 1000V, V_F = 0V, V_{CC} = 30V, T_A = 25°C	9	10	—	—	kV/µs		f, i, h

a. Commercial parts receive 100% testing at 25°C (Subgroups 1 and 9). SMD and Class H parts receive 100% testing at 25°C, 125°C, and –55°C (Subgroups 1 and 9, 2 and 10, 3 and 11, respectively).

b. All typical values at T_A = 25°C and $V_{CC} – V_{EE}$ = 30V, unless otherwise noted.

c. This load condition approximates the gate load of a 1200V/25A IGBT.

d. Pulse Width Distortion (PWD) is defined as $|t_{PHL} – t_{PLH}|$ for any given device.

e. The difference between t_{PHL} and t_{PLH} between any two HCPL-5150 parts under the same test condition.

f. Pins 1 and 4 need to be connected to LED common.

g. Common mode transient immunity in the high state is the maximum tolerable $|dV_{CM}/dt|$ of the common mode pulse, V_{CM}, to assure that the output remains in the high state (i.e., V_O > 15.0V).

h. Parameters are tested as part of device initial characterization and after design and process changes. Parameters are guaranteed to limits specified for all lots not specifically tested.

i. Common mode transient immunity in a low state is the maximum tolerable $|dV_{CM}/dt|$ of the common mode pulse, V_{CM}, to assure that the output remains in a low state (i.e., V_O < 1.0V).

Package Characteristics

Over recommended operating conditions (T_A = –55°C to +125°C) unless otherwise specified.

Parameter	Symbol	Test Conditions	Group A Subgroups[a]	Limits			Unit	Fig.	Notes
				Min	Typ[b]	Max			
Input-Output Leakage Current	I_{I-O}	V_{I-O} = 1500 Vdc RH ≤ 65%, t = 5s, T_A = 25°C	1	—	—	1.0	µA		c, d
Resistance (Input-Output)	R_{I-O}	V_{I-O} = 500 Vdc		—	10^{10}	—	Ω		d
Capacitance (Input-Output)	C_{I-O}	f = 1 MHz		—	2.34	—	pF		d

a. Commercial parts receive 100% testing at 25°C (Subgroups 1 and 9). SMD and Class H parts receive 100% testing at 25°C, 125°Cm and –55°C (Subgroups 1 and 9, 2 and 10, 3 and 11, respectively).

b. All typical values at T_A = 25°C and $V_{CC} – V_{EE}$ = 30V, unless otherwise noted.

c. This is a momentary withstand test, not an operating condition.

d. Device considered a two-terminal device: pins on input side shorted together and pins on output side shorted together.

Figure 1 V_{OH} vs. Temperature

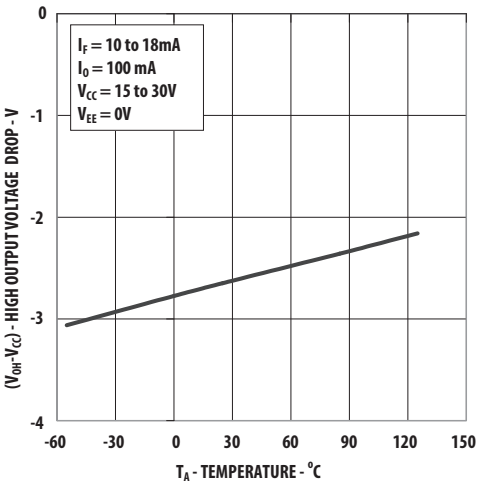

Figure 2 I_{OH} vs. Temperature

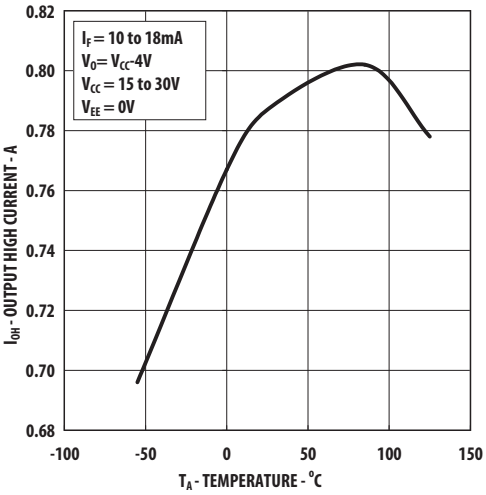

Figure 3 V_{OH} vs. I_{OH}

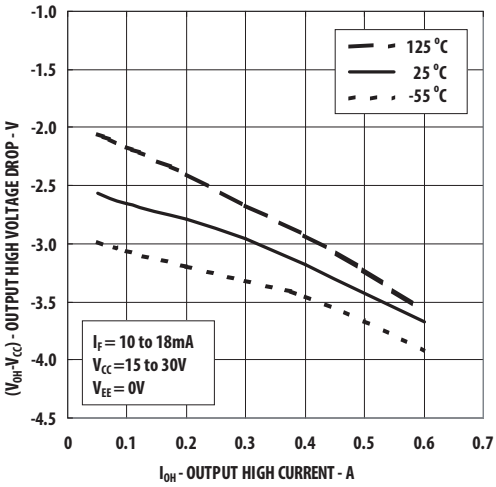

Figure 4 V_{OL} vs. Temperature

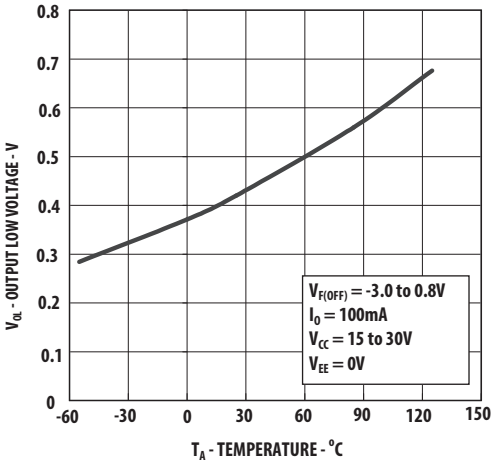

Figure 5 I_{OL} vs. Temperature

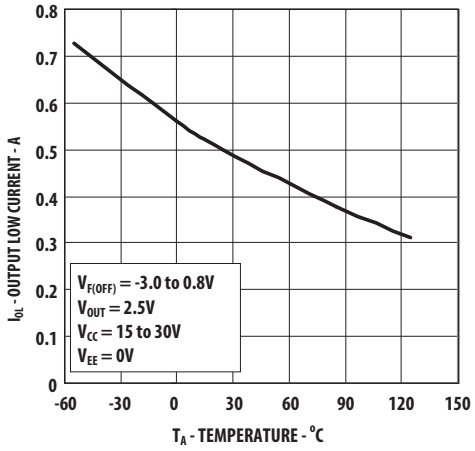

Figure 6 V_{OL} vs. I_{OL}

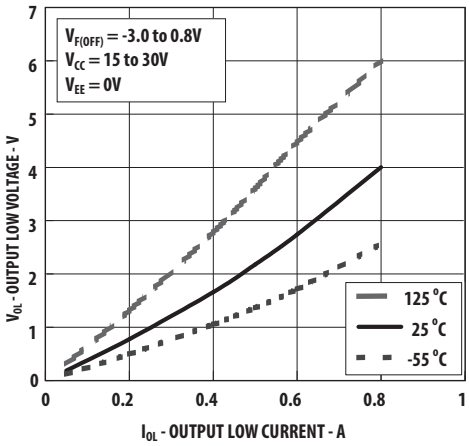

Figure 7 I_{CC} vs. Temperature

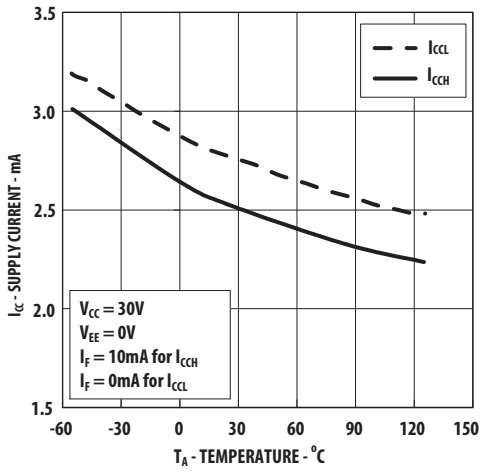

Figure 8 I_{CC} vs. V_{CC}

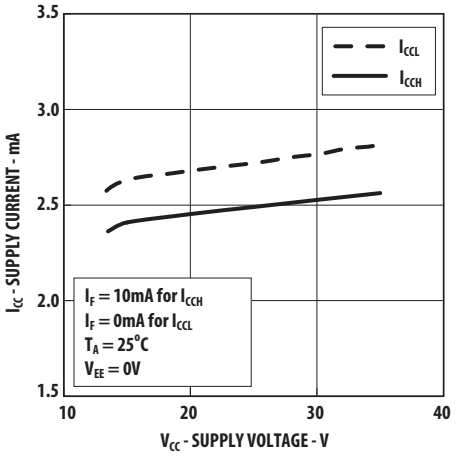

Figure 9 I_{FLH} vs. Temperature

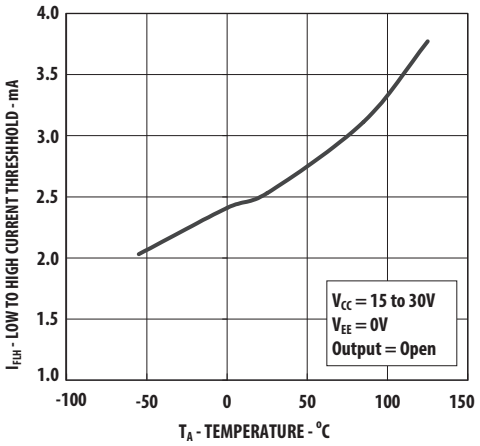

Figure 10 Propagation Delay vs. V_{CC}

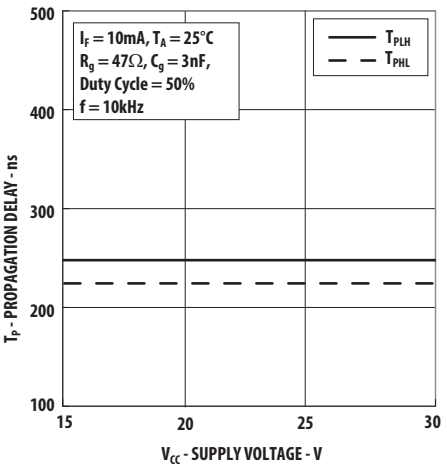

Figure 11 Propagation Delay vs. I_F

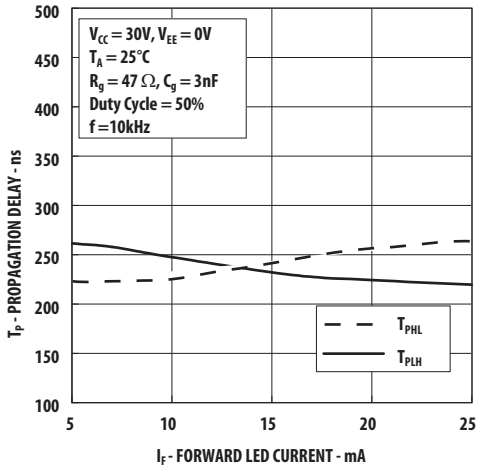

Figure 12 Propagation Delay vs. Temperature

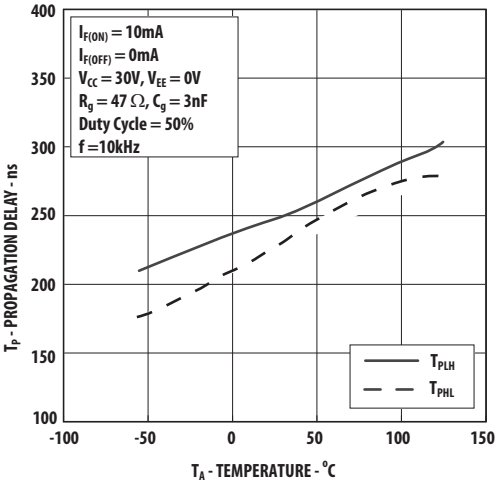

Figure 13 Propagation Delay vs. R_g

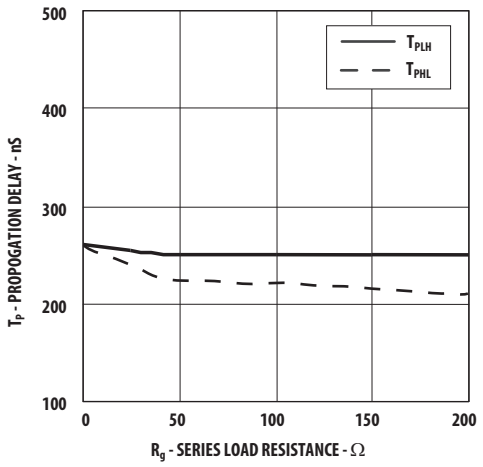

Figure 14 Propagation Delay vs. C_g

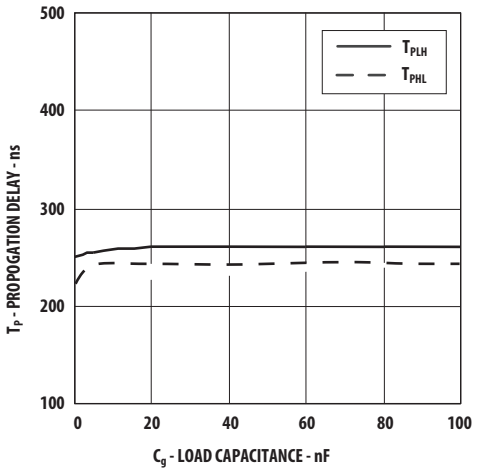

Figure 15 Transfer Characteristics

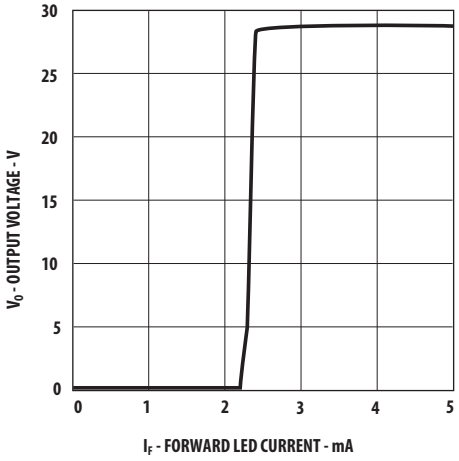

Figure 16 Input Current vs. Forward Voltage

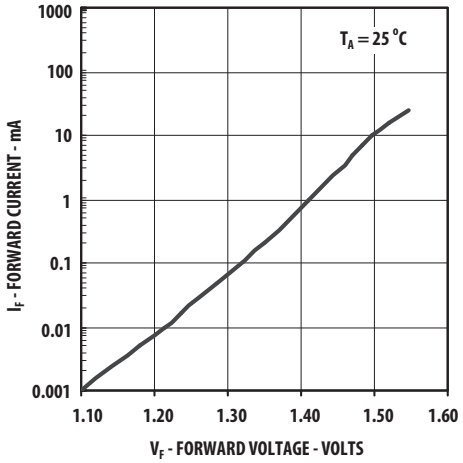

Figure 17 I_{OH} Test Circuit

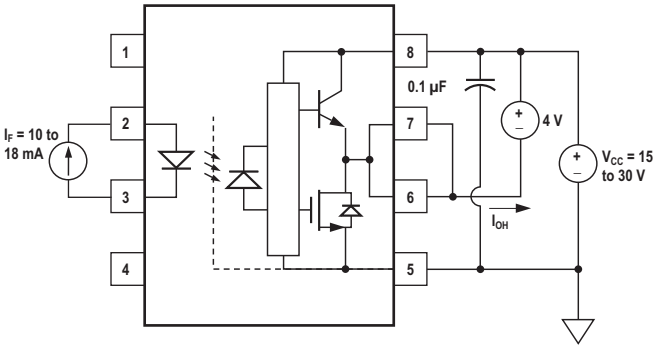

Figure 18 I_{OL} Test Circuit

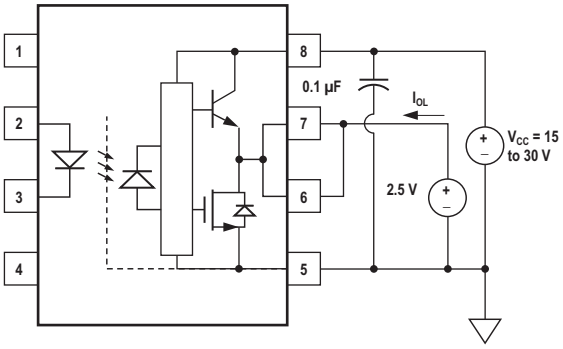

Figure 19 V_{OH} Test Circuit

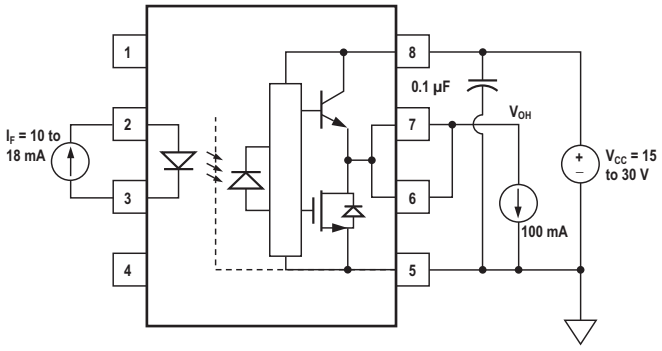

Figure 20 V_{OL} Test Circuit

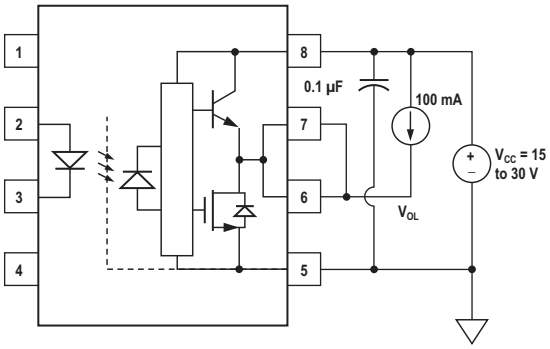

Figure 21 I_{FLH} Test Circuit

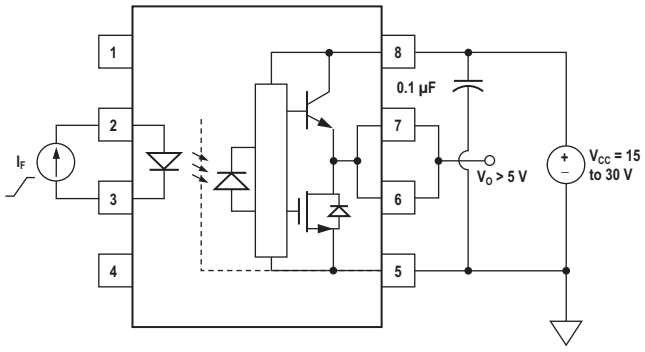

Figure 22 UVLO Test Circuit

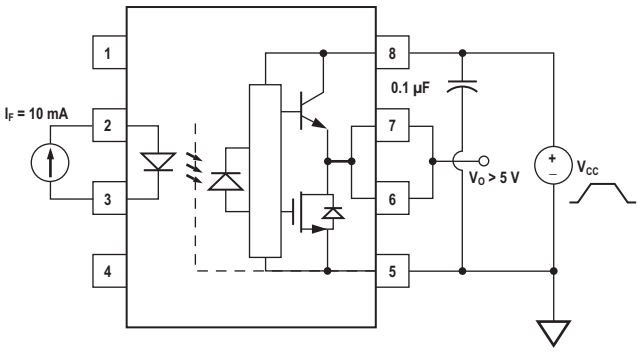

Figure 23 t_{PLH}, t_{PHL}, t_r, and t_f Test Circuit and Waveforms

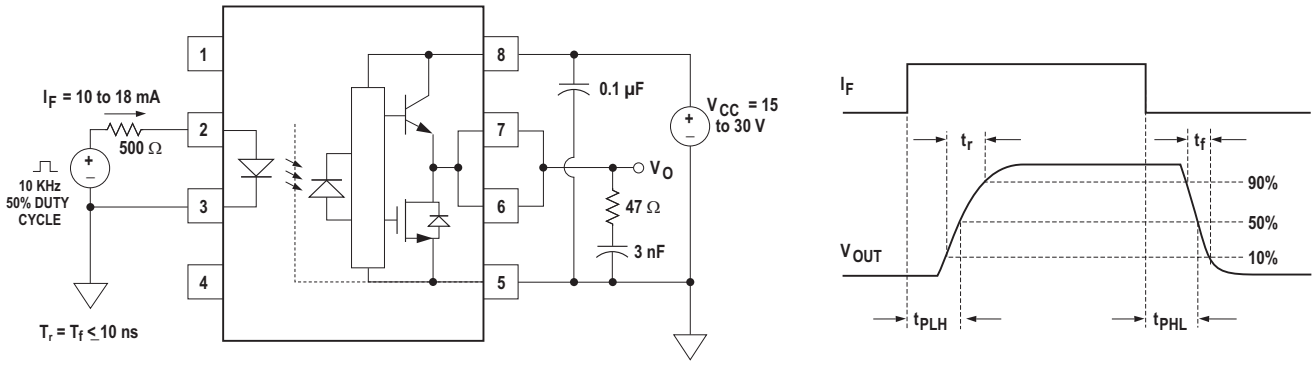

Figure 24 CMR Test Circuit and Waveforms

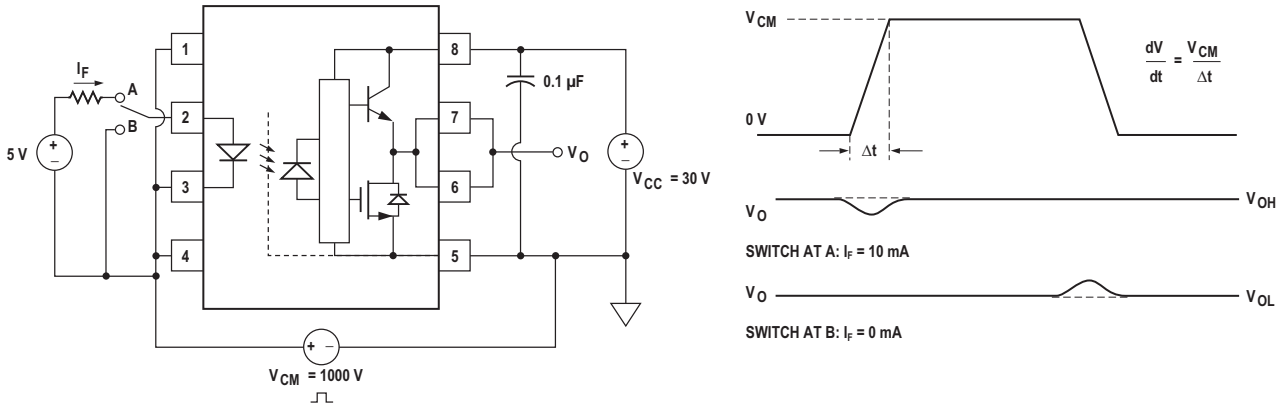

Applications Information

Eliminating Negative IGBT Gate Drive

To keep the IGBT firmly off, the HCPL-515x has a very low maximum V_{OL} specification of 1.0V. The HCPL-515x realizes this very low V_{OL} by using a DMOS transistor with 4Ω (typical) on resistance in its pull down circuit. When the HCPL-515x is in the low state, the IGBT gate is shorted to the emitter by $R_g + 4\Omega$. Minimizing R_g and the lead inductance from the HCPL-515x to the IGBT gate and emitter (possibly by mounting the HCPL-515x on a small PC board directly above the IGBT) can eliminate the need for negative IGBT gate drive in many applications as shown in Figure 25. Care should be taken with such a PC board design to avoid routing the IGBT collector or emitter traces close to the HCPL-515x input, as this can result in unwanted coupling of transient signals into the HCPL-515x and degrade performance. (If the IGBT drain must be routed near the HCPL-515x input, then the LED should be reverse-biased when in the off state, to prevent the transient signals coupled from the IGBT drain from turning on the HCPL-515x.)

Selecting the Gate Resistor (R_g) to Minimize IGBT Switching Losses

Step 1: Calculate R_g Minimum from the I_{OL} Peak Specification.

The IGBT and R_g in Figure 26 can be analyzed as a simple RC circuit with a voltage supplied by the HCPL-515x.

$$R_g = \frac{(V_{CC} - V_{EE} - V_{OL})}{I_{OLPEAK}} = \frac{(V_{CC} - V_{EE} - 1.7V)}{I_{OLPEAK}} = \frac{(15V + 5V - 1.7V)}{0.6A} = 30.5\Omega$$

The V_{OL} value of 2V in the previous equation is a conservative value of V_{OL} at the peak current of 0.6A (see Figure 6). At lower R_g values, the voltage supplied by the HCPL-515x is not an ideal voltage step. This results in lower peak currents (more margin) than predicted by this analysis. When negative gate drive is not used, V_{EE} in the previous equation is equal to zero volts.

Step 2: Check the HCPL-515x Power Dissipation and Increase R_g if Necessary.

The HCPL-515x total power dissipation (P_T) is equal to the sum of the emitter power (P_E) and the output power.

$$P_T = P_E + P_O$$
$$P_E = I_F \times V_F \times \text{Duty Cycle}$$
$$P_O = P_{O(BIAS)} + P_{O\ (SWITCHING)} = I_{CC} \times (V_{CC} - V_{EE}) + E_{SW}(R_g, Q_g) \times f$$

(P_O):

For the circuit in Figure 26 with I_F (worst case) = 18 mA:

$$P_E = 18\ mA \times 1.8V \times 0.8 = 26\ mW$$
$$P_O = 4.25\ mA \times 20V + 2.0\ \mu J \times 20\ kHz = 85\ mW + 40\ mW = 125\ mW > 112\ mW\ (P_{O(MAX)} \text{ at } 125°C = 250\ mW - 23°C \times 6\ mW/°C)$$

$R_g = 30.5\Omega$, Max Duty Cycle = 80%, Q_g = 250 nC, f = 20 kHz and T_A max = 125°C:

The value of 4.25 mA for I_{CC} in the previous equation was obtained by derating the I_{CC} max of 5 mA (which occurs at –55°C) to I_{CC} max at 125°C.

$$P_{O(SWITCHING\ MAX)} = P_{O(MAX)} - P_{O(BIAS)} = 112\ mW - 85\ mW = 27\ mW$$

$$E_{SW(MAX)} = \frac{P_{O(SWITCHING\ MAX)}}{f} = \frac{27\ mW}{20\ kHz} = 1.35\ \mu J$$

Since PO for this case is greater than $P_{O(MAX)}$, R_g must be increased to reduce the HCPL-515x power dissipation.

For Q_g = 250 nC, from Figure 27, a value of E_{SW} = 1.35 µJ gives a $R_g = 90\Omega$.

Figure 25 Recommended LED Drive and Application Circuit

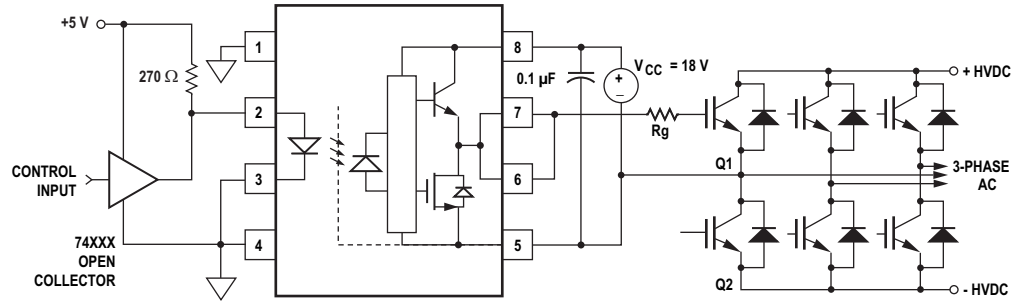

Figure 26 Typical Application Circuit with Negative IGBT Gate Drive

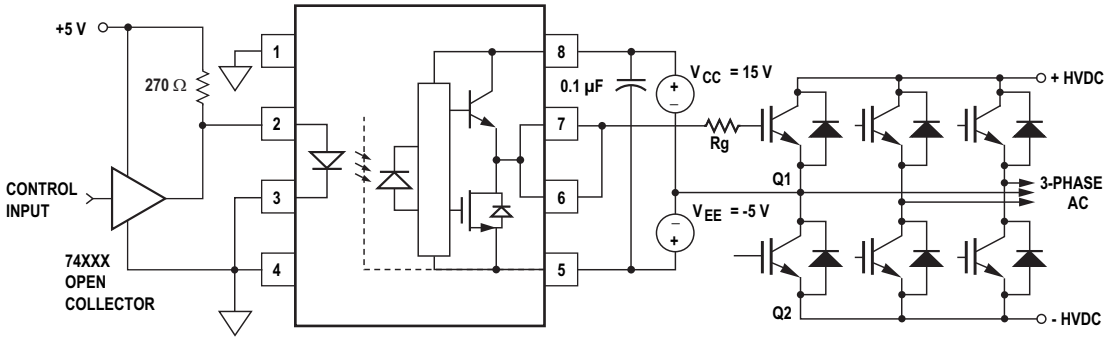

P_E Parameter	Description
I_F	LED Current
V_F	LED On Voltage
Duty Cycle	Maximum LED Duty Cycle

P_o Parameter	Description
I_{CC}	Supply Current
V_{CC}	Positive Supply Voltage
V_{EE}	Negative Supply Voltage
E_{SW} (R_g, Q_g)	Energy Dissipation in the HCPL-515x for each IGBT Switching Cycle (See Figure 27.)
f	Switching Frequency

LED Drive Circuit Considerations for Ultra High CMR Performance

Without a detector shield, the dominant cause of optocoupler CMR failure is capacitive coupling from the input side of the optocoupler, through the package, to the detector IC as shown in Figure 28.

The HCPL-515x improves CMR performance by using a detector IC with an optically transparent Faraday shield, which diverts the capacitively coupled current away from the sensitive IC circuitry. However, this shield does not eliminate the capacitive coupling between the LED and optocoupler pins 5 to 8 as shown in Figure 29. This capacitive coupling causes perturbations in the LED current during common mode transients and becomes the major source of CMR failures for a shielded optocoupler. The main design objective of a high CMR LED drive circuit becomes keeping the LED in the proper state (on or off) during common mode transients. For example, the recommended application circuit, (Figure 25) can achieve 10 kV/µs CMR while minimizing component complexity. Techniques to keep the LED in the proper state are discussed in the next two sections.

Figure 27 Energy Dissipated in the HCPL-515x for Each IGBT Switching Cycle

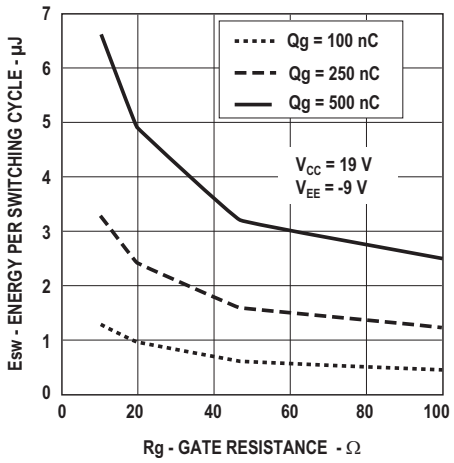

Figure 28 Optocoupler Input to Output Capacitance Model for Unshielded Optocouplers

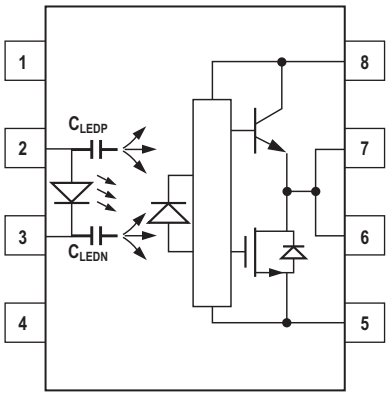

Figure 29 Optocoupler Input to Output Capacitance Model for Shielded Optocouplers

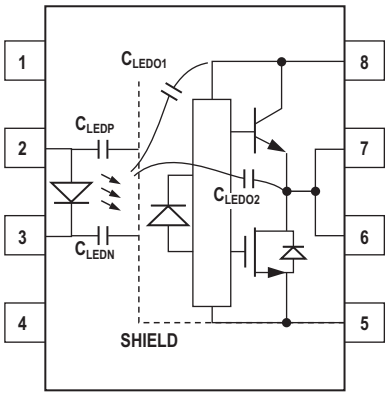

CMR with the LED On (CMRH)

A high CMR LED drive circuit must keep the LED on during common mode transients. This is achieved by overdriving the LED current beyond the input threshold so that it is not pulled below the threshold during a transient. A minimum LED current of 10 mA provides adequate margin over the maximum I_{FLH} of 7 mA to achieve 10 kV/µs CMR.

CMR with the LED Off (CMRL)

A high CMR LED drive circuit must keep the LED off ($V_F \leq V_{F(OFF)}$) during common mode transients. For example, during a $-dV_{CM}/dt$ transient in Figure 30, the current flowing through C_{LEDP} also flows through the R_{SAT} and V_{SAT} of the logic gate. As long as the low state voltage developed across the logic gate is less than $V_{F(OFF)}$, the LED remains off and no common mode failure occurs.

Figure 30 Equivalent Circuit for Figure 25 During Common Mode Transient

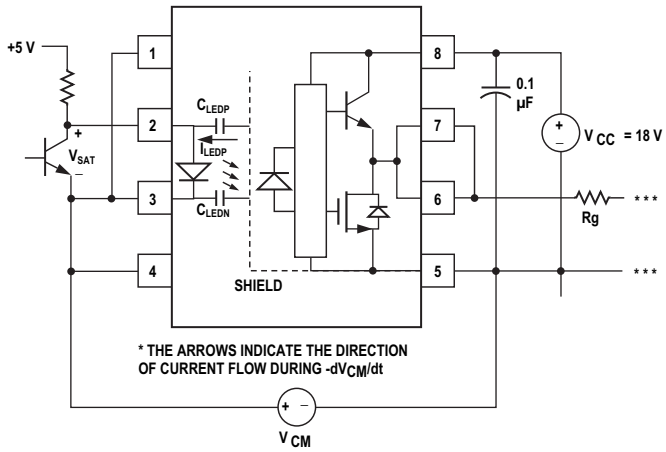

The open collector drive circuit, shown in Figure 31, cannot keep the LED off during a $+dV_{CM}/dt$ transient, since all the current flowing through C_{LEDN} must be supplied by the LED, and it is not recommended for applications requiring ultra high CMR_L performance. Figure 32 is an alternative drive circuit which, like the recommended application circuit (Figure 25), does achieve ultra high CMR performance by shunting the LED in the off state.

Figure 31 Not Recommended Open Collector Drive Circuit

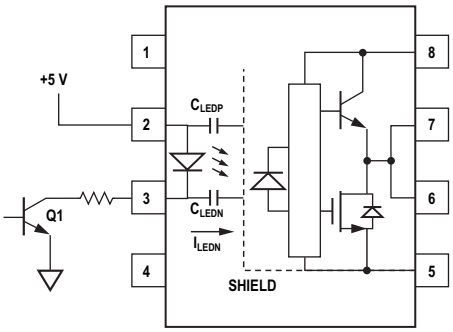

Figure 32 Recommended LED Drive Circuit for Ultra-High CMR

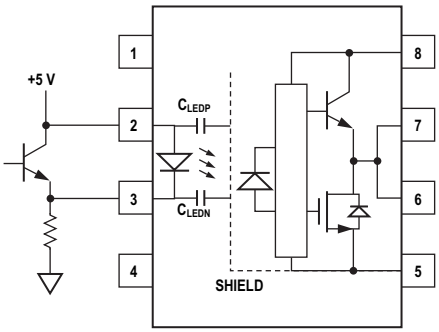

IPM Dead Time and Propagation Delay Specifications

The HCPL-515x includes a Propagation Delay Difference (PDD) specification intended to help designers minimize *dead time* in their power inverter designs. Dead time is the time period during which both the high and low side power transistors (Q1 and Q2 in Figure 25) are off. Any overlap in Q1 and Q2 conduction results in large currents flowing through the power devices between the high and low voltage motor rail.

To minimize dead time in a given design, the turn on of LED2 should be delayed (relative to the turn off of LED1) so that under worst-case conditions, transistor Q1 has just turned off when transistor Q2 turns on, as shown in Figure 33. The amount of delay necessary to achieve this condition is equal to the maximum value of the propagation delay difference specification, PDDMAX, which is specified to be 350 ns over the operating temperature range of –55°C to +125°C.

Delaying the LED signal by the maximum propagation delay difference ensures that the minimum dead time is zero, but it does not tell a designer what the maximum dead time will be. The maximum dead time is equivalent to the difference between the maximum and minimum propagation delay difference specifications as shown in Figure 34. The maximum dead time for the HCPL-515x is 700 ns (= 350 ns – (–350 ns)) over an operating temperature range of –55°C to +125°C.

Note that the propagation delays used to calculate PDD and dead time are taken at equal temperatures and test conditions since the optocouplers under consideration are typically mounted in close proximity to each other and are switching identical IGBTs.

Figure 33 Minimum LED Skew for Zero Dead Time

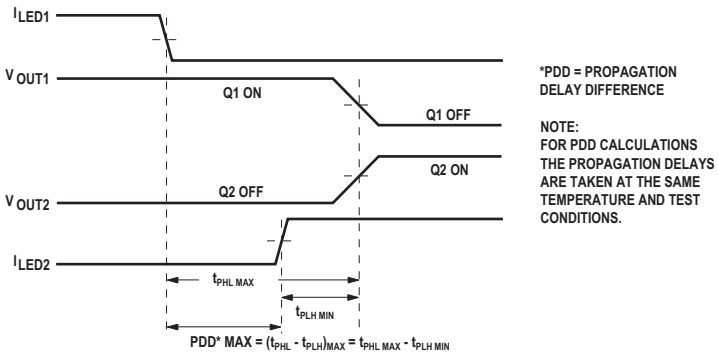

Figure 34 Waveforms for Dead Time Calculations

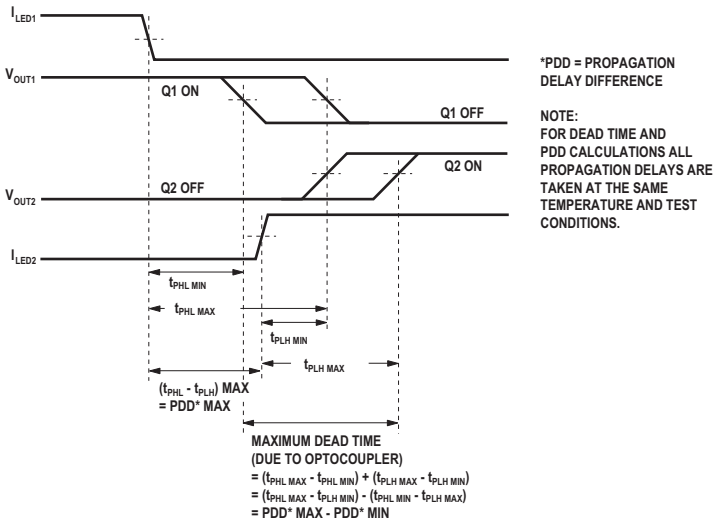

Figure 35 Input Thermal Derating Curve, Dependence of Case-to-Ambient Thermal Resistance

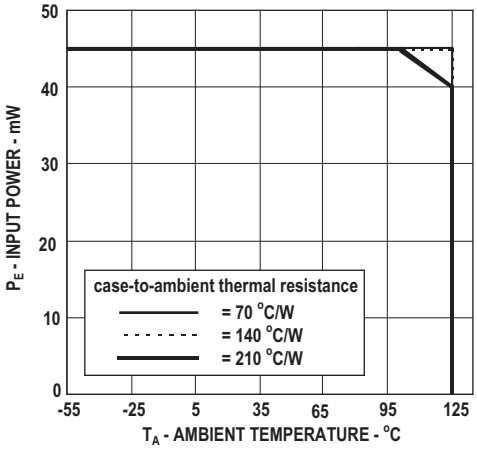

Figure 36 Output Thermal Derating Curve, Dependence of Case-to-Ambient Thermal Resistance

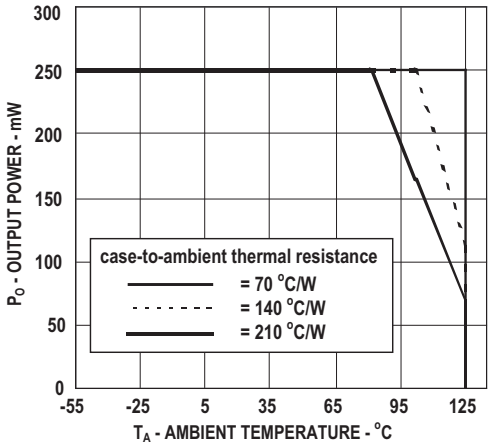

Undervoltage Lockout Feature

The HCPL-515x contains an undervoltage lockout (UVLO) feature that is designed to protect the IGBT under fault conditions which cause the HCPL-515x supply voltage (equivalent to the fully charged IGBT gate voltage) to drop below a level necessary to keep the IGBT in a low resistance state. When the HCPL-515x output is in the high state and the supply voltage drops below the HCPL-515x V_{UVLO-} threshold ($9.5 < V_{UVLO-} < 12.0$), the optocoupler output goes into the low state with a typical delay, UVLO Turn Off Delay, of 0.6 µs.

When the HCPL-515x output is in the low state and the supply voltage rises above the HCPL-515x V_{UVLO+} threshold ($11.0 < V_{UVLO+} < 13.5$) the optocoupler output goes into the high state (assuming LED is ON) with a typical delay, UVLO Turn On Delay of 0.8 µs.

Figure 37 Undervoltage Lock Out

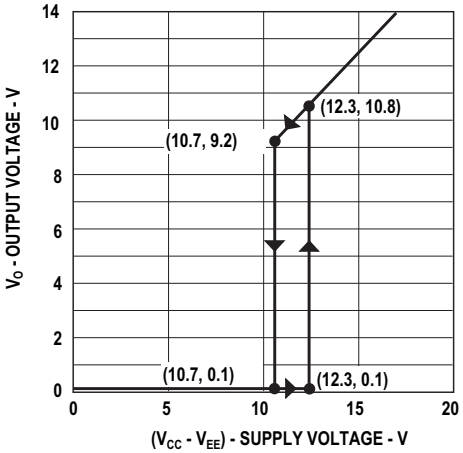

For product information and a complete list of distributors, please go to our web site: www.broadcom.com.

Broadcom, the pulse logo, Connecting everything, Avago Technologies, Avago, and the A logo are among the trademarks of Broadcom in the United States, certain other countries and/or the EU.

Copyright © 2005-2017 Broadcom. All Rights Reserved.

The term "Broadcom" refers to Broadcom Limited and/or its subsidiaries. For more information, please visit www.broadcom.com.

Broadcom reserves the right to make changes without further notice to any products or data herein to improve reliability, function, or design.

Information furnished by Broadcom is believed to be accurate and reliable. However, Broadcom does not assume any liability arising out of the application or use of this information, nor the application or use of any product or circuit described herein, neither does it convey any license under its patent rights nor the rights of others.

AV02-3841EN – April 5, 2017

OCEAN CHIPS
Океан Электроники
Поставка электронных компонентов

Компания «Океан Электроники» предлагает заключение долгосрочных отношений при поставках импортных электронных компонентов на взаимовыгодных условиях!

Наши преимущества:

- Поставка оригинальных импортных электронных компонентов напрямую с производств Америки, Европы и Азии, а так же с крупнейших складов мира;
- Широкая линейка поставок активных и пассивных импортных электронных компонентов (более 30 млн. наименований);
- Поставка сложных, дефицитных, либо снятых с производства позиций;
- Оперативные сроки поставки под заказ (от 5 рабочих дней);
- Экспресс доставка в любую точку России;
- Помощь Конструкторского Отдела и консультации квалифицированных инженеров;
- Техническая поддержка проекта, помощь в подборе аналогов, поставка прототипов;
- Поставка электронных компонентов под контролем ВП;
- Система менеджмента качества сертифицирована по Международному стандарту ISO 9001;
- При необходимости вся продукция военного и аэрокосмического назначения проходит испытания и сертификацию в лаборатории (по согласованию с заказчиком);
- Поставка специализированных компонентов военного и аэрокосмического уровня качества (Xilinx, Altera, Analog Devices, Intersil, Interpoint, Microsemi, Actel, Aeroflex, Peregrine, VPT, Syfer, Eurofarad, Texas Instruments, MS Kennedy, Miteq, Cobham, E2V, MA-COM, Hittite, Mini-Circuits, General Dynamics и др.);

Компания «Океан Электроники» является официальным дистрибьютором и эксклюзивным представителем в России одного из крупнейших производителей разъемов военного и аэрокосмического назначения **«JONHON»**, а так же официальным дистрибьютором и эксклюзивным представителем в России производителя высокотехнологичных и надежных решений для передачи СВЧ сигналов **«FORSTAR»**.

AVIC JONHON

«JONHON» (основан в 1970 г.)

Разъемы специального, военного и аэрокосмического назначения:

(Применяются в военной, авиационной, аэрокосмической, морской, железнодорожной, горно- и нефтедобывающей отраслях промышленности)

«FORSTAR» (основан в 1998 г.)

ВЧ соединители, коаксиальные кабели, кабельные сборки и микроволновые компоненты:

(Применяются в телекоммуникациях гражданского и специального назначения, в средствах связи, РЛС, а так же военной, авиационной и аэрокосмической отраслях промышленности).

FORSTAR®

Телефон: 8 (812) 309-75-97 (многоканальный)
Факс: 8 (812) 320-03-32
Электронная почта: ocean@oceanchips.ru
Web: http://oceanchips.ru/
Адрес: 198099, г. Санкт-Петербург, ул. Калинина, д. 2, корп. 4, лит. А