High Speed, Logic Isolator with Power Transformer

AD260

FEATURES

IsoLogic™ Circuit Architecture
Isolation Test Voltage: To 3.5 kV rms
Five Isolated Logic Lines: Available in Six I/O Configurations
Logic Signal Bandwidth: 20 MHz (Min), 40 mbps (NRZ)
Isolated Power Transformer: 37 V p-p, 1.5 W Max
CMV Transient Immunity: 10 kV/µs Min
Waveform Edge Transmission Symmetry: ±1 ns
Field and System Output Enable/Three-State Functions
Performance Rated Over –25°C to +85°C
UL1950, IEC950, EN60950 Certification, Pending

APPLICATIONS

PLC/DCS Analog Input and Output Cards
Communications Bus Isolation
General Data Acquisition Applications
IGBT Motor Drive Controls
High Speed Digital I/O Ports

GENERAL DESCRIPTION

The AD260 is designed using Analog Devices new IsoLogic circuit architecture to isolate five digital control signals to/from a microcontroller and its related field I/O components. Six models allow all I/O combinations from five input lines to five output lines, including combinations in between. Every AD260 effectively replaces up to five opto-isolators while also providing the 1.5 W transformer for a 3.5 kV isolated dc-dc power supply circuit.

Each line of the AD260 has a bandwidth of 20 MHz (min) with a propagation delay of only 14 ns, which allows for extremely fast data transmission. Output waveform symmetry is maintained to within ±1 ns of the input so the AD260 can be used to accurately isolate time-based PWM signals.

All field or system output pins of the AD260 can be set to a high resistance three-state level by use of the two enable pins. A field output three-stated offers a convenient method of presetting logic levels at power-up by use of pull-up/down resistors. System side outputs being three-stated allows for easy multiplexing of multiple AD260s.

The isolation barrier of the AD260 B Grade is 100% tested at 3.5 kV rms (system to field). The barrier design also provides excellent common-mode transient immunity from 10 kV/µs common-mode voltage excursions of field side terminals relative to the system side, with no false output triggering on either side.

Each output is updated within nanoseconds by input logic transitions, the AD260 also has a continuous output update feature that automatically updates each output based on the dc level of the input. This guarantees the output is always valid 10 µs after a fault condition or after the power-up reset interval.

The AD260 also has an integral center tap transformer for generating isolated power. Typically driven by a 5 V push-pull drive at the primary, it will generate a 37 V p-p output capable of supplying up to 1.5 W. This can then be regulated to the desired voltage, including ±5 V dc for circuit components and 24 V for a 20 mA loop supply when needed.

IsoLogic is a trademark of Analog Devices, Inc.

FUNCTIONAL BLOCK DIAGRAM

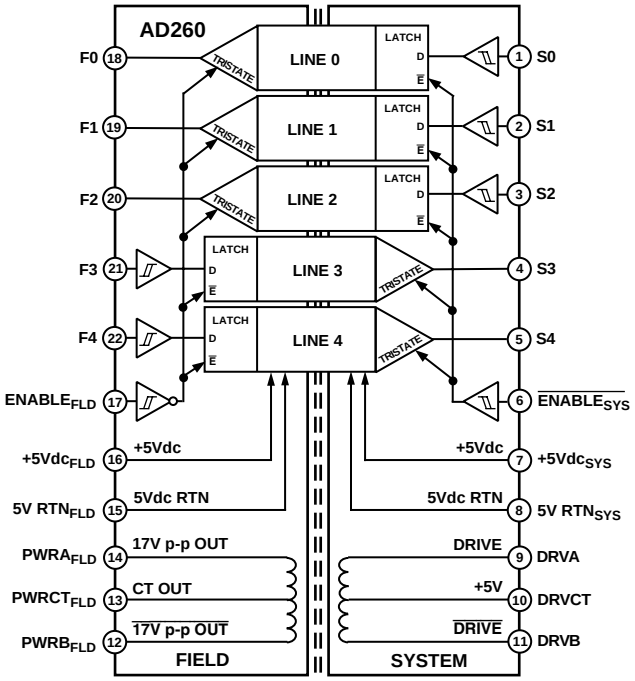

PRODUCT HIGHLIGHTS

Six Isolated Logic Line I/O Configurations Available: The AD260 is available in six pin-compatible versions of I/O configurations to meet a wide variety of requirements.

Wide Bandwidth with Minimal Edge Error: The AD260 with IsoLogic affords extremely fast isolation of logic signals due to its 20 MHz bandwidth and 14 ns propagation delay. It maintains a waveform input-to-output edge transition error of typically less than ±1 ns (total) for positive vs. negative transition.

3.5 kV rms Test Voltage Isolation Rating: The AD260 B Grade is rated to operate at 1.25 kV rms and is 100% production tested at 3.5 kV rms, using a standard ADI test method.

High Transient Immunity: The AD260 rejects common-mode transients slewing at up to 10 kV/µs without false triggering or damage to the device.

(*Continued on page* 6)

REV. 0

Information furnished by Analog Devices is believed to be accurate and reliable. However, no responsibility is assumed by Analog Devices for its use, nor for any infringements of patents or other rights of third parties which may result from its use. No license is granted by implication or otherwise under any patent or patent rights of Analog Devices.

One Technology Way, P.O. Box 9106, Norwood, MA 02062-9106, U.S.A.
Tel: 781/329-4700 World Wide Web Site: http://www.analog.com
Fax: 781/326-8703
© Analog Devices, Inc., 1998

AD260–SPECIFICATIONS (Typical at T_A = +25°C, +5 V dc_{SYS}, +5 V dc_{FLD}, t_{RR} = 50 ns max unless otherwise noted)

Parameter	Conditions	Min	Typ	Max	Units
INPUT CHARACTERISTICS					
Threshold Voltage					
Positive Transition (V_{T+})	+5 V dc_{SYS} = 4.5 V	2.0	2.7	3.15	V
	+5 V dc_{SYS} = 5.5 V	3.0	3.2	4.2	V
Negative Transition (V_{T-})	+5 V dc_{SYS} = 4.5 V	0.9	1.8	2.2	V
	+5 V dc_{SYS} = 5.5 V	1.2	2.2	3.0	V
Hysteresis Voltage (V_H)	+5 V dc_{SYS} = 4.5 V	0.4	0.9	1.4	V
	+5 V dc_{SYS} = 5.5 V	0.5	1.0	1.5	V
Input Capacitance (C_{IN})			5		pF
Input Bias Current (I_{IN})	Per Input		0.5		µA
OUTPUT CHARACTERISTICS					
Output Voltage[1]					
High Level (V_{OH})	+5 V dc_{SYS} = 4.5 V, $\|I_O\|$ = 0.02 mA	4.4			V
	+5 V dc_{SYS} = 4.5 V, $\|I_O\|$ = 4 mA	3.7			V
Low Level (V_{OL})	+5 V dc_{SYS} = 4.5 V, $\|I_O\|$ = 0.02 mA			0.1	V
	+5 V dc_{SYS} = 4.5 V, $\|I_O\|$ = 4 mA			0.4	V
Output Three-State Leakage Current	$ENABLE_{SYS/FLD}$ @ Logic Low/High Level Respectively		0.5		µA
DYNAMIC RESPONSE[1] (Refer to Figure 2)					
Max Logic Signal Frequency (f_{MIN})	50% Duty Cycle, +5 V dc_{SYS} = 5 V	20			MHz
Waveform Edge Symmetry Error (t_{ERROR})	t_{PHL} vs. t_{PLH}		±1		ns
Logic Edge Propagation Delay (t_{PHL}, t_{PLH})			14	25	ns
Minimum Pulsewidth (t_{PWMIN})		25			ns
Max Output Update Delay on Fault or After Power-Up Reset Interval (≈ 30 µs)[2]			12		µs
ISOLATION BARRIER RATING[3]					
Operating Isolation Voltage (V_{CMV})	AD260A			375	V rms
	AD260B			1250	V rms
Isolation Rating Test Voltage ($V_{CMV\ TEST}$)[4]	AD260A	1750			V rms
	AD260B	3500			V rms
Transient Immunity ($V_{TRANSIENT}$)		10,000			V/µs
Isolation Mode Capacitance (C_{ISO})	Total Capacitance, All Lines and Transformer		14	18	pF
Capacitive Leakage Current (I_{LEAD})	240 V rms @ 60 Hz			2	µA rms
POWER TRANSFORMER					
Primary Winding	Bifilar Wound, Center-Tapped				
Inductance (Lp)	Each Half		1		mH
Number of Turns (Np)	Each Half		26		Turns
Resistance	Each Half		0.6		Ω
Max Volt-Seconds (E × t)	Each Half			27	V × µs
Recommended Operating Frequency	–25°C to +85°C, Push-Pull Drive	150	200	300	kHz
Absolute Min Operating Frequency	–25°C to +85°C, Push-Pull Drive	75			kHz
Secondary Winding	Bifilar Wound, Center-Tapped				
Number of Turns (Ns)	Each Half		48		Turns
Resistance	Each Half		2.3		Ω
Insulation Withstand ($V_{CMV\ TEST}$)	Primary to Secondary	3,500			V rms
Capacitance	Primary to Secondary		5		pF
Recommended Max Power	Rated Performance	1.0		1.5	W
POWER SUPPLY					
Supply Voltage (+5 V dc_{SYS} and +5 V dc_{FLD})	Rated Performance	4.5		5.5	V dc
	Operating	4.0		5.75	V dc
Power Dissipation Capacitance	Effective, per Input, Either Side		8		pF
	Effective per Output, Either Side—No Load		28		pF
Quiescent Supply Current	Each, +5 V $dc_{SYS\ \&\ FLD}$		4		mA
Supply Current	All Lines @ 10 MHz (Sum of +5 V $dc_{SYS\ \&\ FLD}$)		18		mA
TEMPERATURE RANGE					
Rated Performance (T_A)[5]		–25		+85	°C
Storage (T_{STG})		–40		+85	°C

NOTES

[1]For best performance, bypass +5 V dc supplies to com. at or near the device (0.01 µF). +5 V dc supplies are also internally bypassed with 0.05 µF.

[2]As the supply voltage is applied to either side of the AD260, the internal circuitry will go into a power-up reset mode (all lines disabled) for about 30 µs after the point where +5 V $dc_{SYS\ \&\ FLD}$ passes above 3.3 V.

[3]"Operating" isolation voltage is derived from the Isolation Test Voltage in accordance with such methods as found in VDE-0883 wherein a device will be "hi-pot" tested at twice the operating voltage, plus one thousand volts. Partial discharge testing, with an acceptance threshold of 80 pC of discharge may be considered the same as a hi-pot test (but nondestructive).

[4]Partial Discharge at 80 pC THLD.

[5]Supply Current will increase slightly, but otherwise the unit will function within specification to –40°C.

Specifications are subject to change without notice.

ABSOLUTE MAXIMUM RATINGS*

Parameter	Conditions	Min	Typ	Max	Units
Supply Voltage (+5 V $dc_{SYS\ \&\ FLD}$)		–0.5		+6.0	V
DC Input Voltage ($V_{IN\ MAX}$)	Referred to +5 V $dc_{SYS\ \&\ FLD}$ and 5 V $RTN_{SYS\ \&\ FLD}$ Respectively	–0.5		+0.5	V
DC Output Voltage ($V_{OUT\ MAX}$)	Referred to +5 V $RTN_{SYS\ \&\ FLD}$ and 5 V $dc_{SYS\ \&\ FLD}$ Respectively	–0.5		+0.5	V
Clamp Diode Input Current (I_{IK})	For V_I < –0.5 V or V_I > 5 V $RTN_{SYS\ \&\ FLD}$ +0.5 V	–25		+25	mA
Clamp Diode Output Current (I_{OK})	For V_O < –0.5 V or V_O > 5 V $RTN_{SYS\ \&\ FLD}$ +0.5 V	–25		+25	mA
Output DC Current, per Pin (I_{OUT})		–25		+25	mA
DC Current, V_{CC} or GND (I_{CC} or I_{GND})		–50		+50	mA
Storage Temperature (T_{STG})		–40		+85	°C
Lead Temperature (Soldering, 10 sec)				+300	°C
Electrostatic Protection (V_{ESD})	Per MIL-STD-883, Method 3015	4.5	5		kV

*Stresses above those listed under Absolute Maximum Ratings may cause permanent damage to the device. This is a stress rating only; functional operation of the device at these or any other conditions above those indicated in the operational sections of this specification is not implied. Exposure to absolute maximum ratings for extended periods may effect device reliability.

I/O CONFIGURATIONS AVAILABLE

The AD260 is available in several configurations. The choice of model is determined by the desired number of input vs. output lines. All models have identical footprints with the power and enable pins always being in the same locations.

PIN FUNCTION DESCRIPTIONS

Pin	Mnemonic	Function
1–5*	S0 Through S4	Digital Xmt or Rcv from F0 Through F4
6	$\overline{ENABLE_{SYS}}$	System Output Enable/Three-State
7	+5 V dc_{SYS}	System Power Supply (+5 V dc Input)
8	5 V RTN_{SYS}	System Power Supply Common
9–14		Not Present On Unit
15	5 V RTN_{FLD}	Field Power Supply Common
16	+5 V dc_{FLD}	Field Power Supply (+5 V Input)
17	$ENABLE_{FLD}$	Field Output Enable/Three-State
18–22*	F0 Through F4	Digital Xmt or Rcv from S0 Through S4

*Function of pin determined by model. Refer to Table I.

Caution: Use care in handling unit as contaminants on the bottom side of the unit or the circuit card to which it is mounted will lead to reduced breakdown voltage across the isolation barrier.

PIN CONFIGURATION

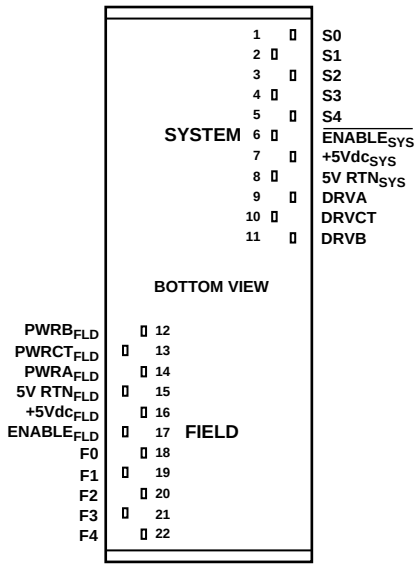

ORDERING GUIDE

Model Number	Description	Isolation Test Voltage	Package Description	Package Option
AD260AND-0	0 Inputs, 5 Outputs	1.75 kV rms	Plastic DIP	ND-22
AD260AND-1	1 Input, 4 Outputs	1.75 kV rms	Plastic DIP	ND-22
AD260AND-2	2 Inputs, 3 Outputs	1.75 kV rms	Plastic DIP	ND-22
AD260AND-3	3 Inputs, 2 Outputs	1.75 kV rms	Plastic DIP	ND-22
AD260AND-4	4 Inputs, 1 Output	1.75 kV rms	Plastic DIP	ND-22
AD260AND-5	5 Inputs, 0 Outputs	1.75 kV rms	Plastic DIP	ND-22
AD260BND-0	0 Inputs, 5 Outputs	3.5 kV rms	Plastic DIP	ND-22
AD260BND-1	1 Input, 4 Outputs	3.5 kV rms	Plastic DIP	ND-22
AD260BND-2	2 Inputs, 3 Outputs	3.5 kV rms	Plastic DIP	ND-22
AD260BND-3	3 Inputs, 2 Outputs	3.5 kV rms	Plastic DIP	ND-22
AD260BND-4	4 Inputs, 1 Output	3.5 kV rms	Plastic DIP	ND-22
AD260BND-5	5 Inputs, 0 Outputs	3.5 kV rms	Plastic DIP	ND-22

CAUTION

ESD (electrostatic discharge) sensitive device. Electrostatic charges as high as 4000 V readily accumulate on the human body and test equipment and can discharge without detection. Although the AD260 features proprietary ESD protection circuitry, permanent damage may occur on devices subjected to high energy electrostatic discharges. Therefore, proper ESD precautions are recommended to avoid performance degradation or loss of functionality.

PIN CONFIGURATIONS

AD260BND-0

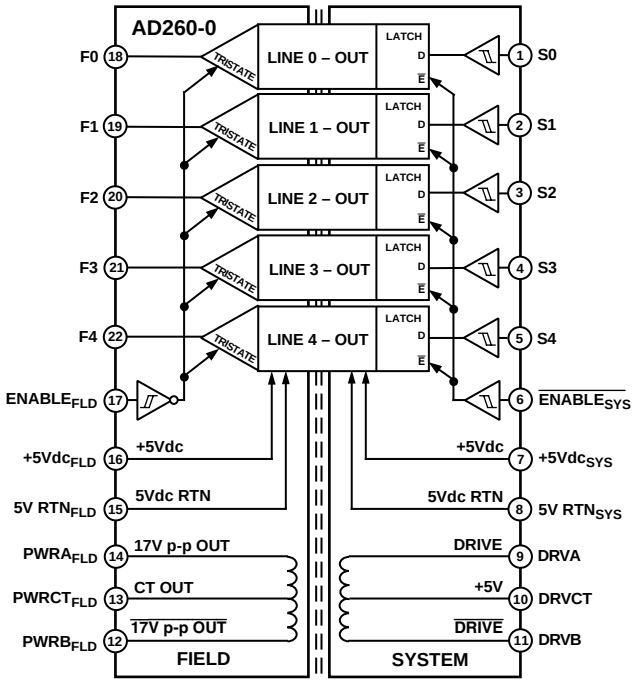

AD260BND-2

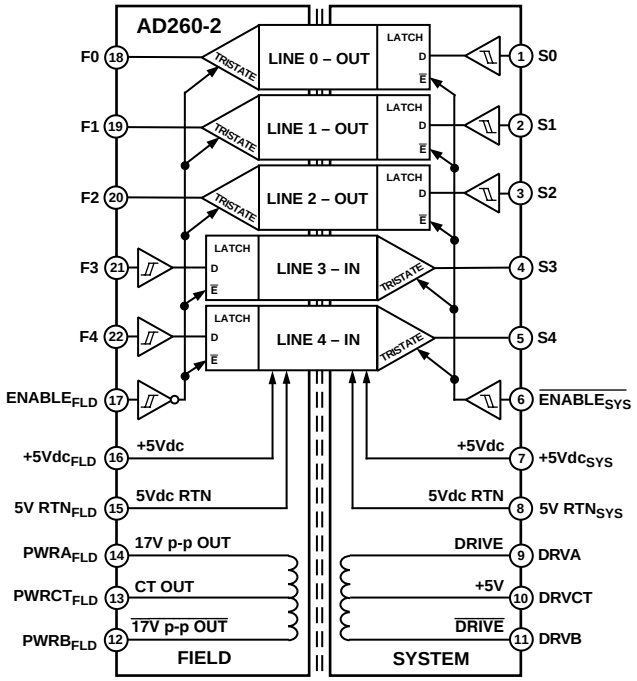

AD260BND-1

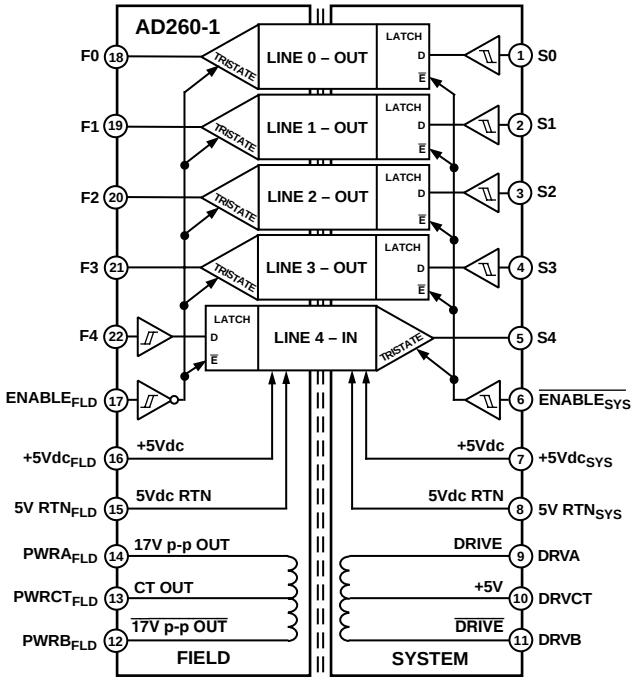

AD260BND-3

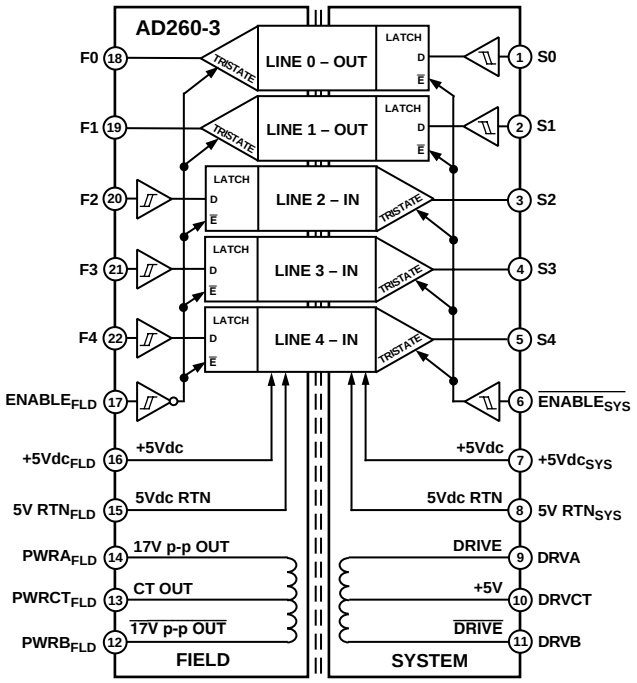

PIN CONFIGURATIONS

AD260BND-4

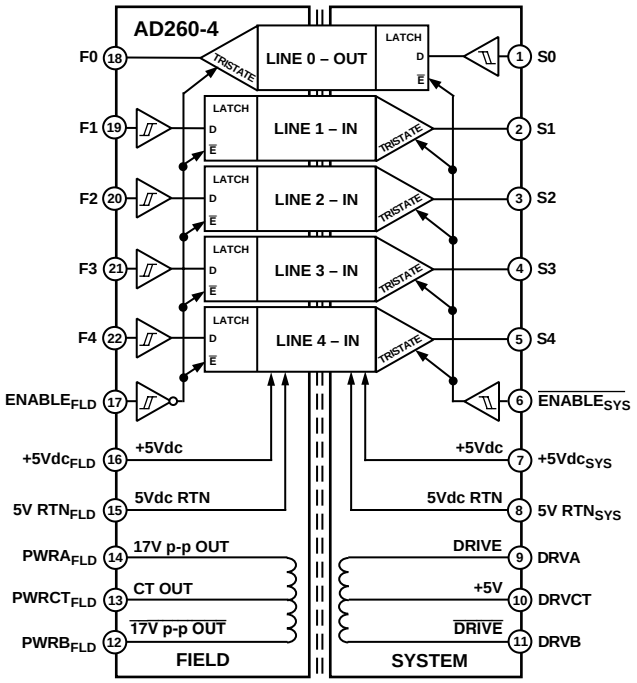

AD260BND-5

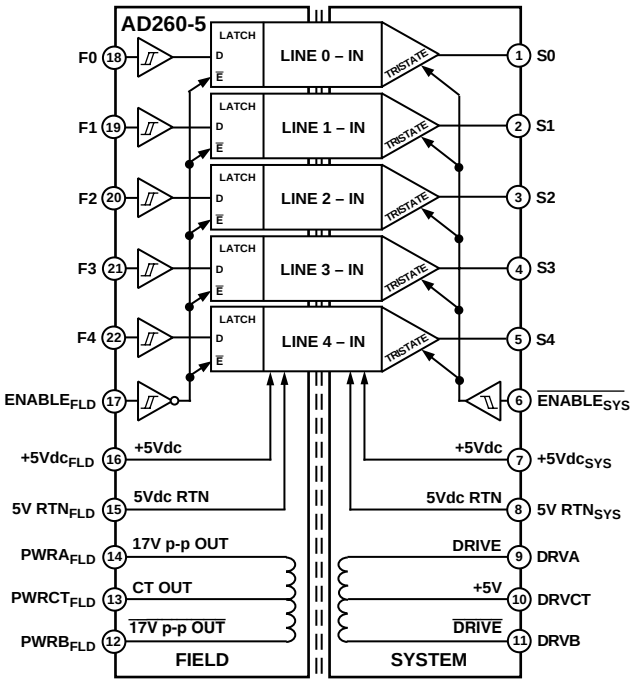

Table I.

Pin	AD260BND-0	AD260BND-1	AD260BND-2	AD260BND-3	AD260BND-4	AD260BND-5
1	S0 (Xmt)	S0 (Xmt)	S0 (Xmt)	S0 (Xmt)	S0 (Xmt)	S0 (Rcv)
2	S1 (Xmt)	S1 (Xmt)	S1 (Xmt)	S1 (Xmt)	S1 (Rcv)	S1 (Rcv)
3	S2 (Xmt)	S2 (Xmt)	S2 (Xmt)	S2 (Rcv)	S2 (Rcv)	S2 (Rcv)
4	S3 (Xmt)	S3 (Xmt)	S3 (Rcv)	S3 (Rcv)	S3 (Rcv)	S3 (Rcv)
5	S4 (Xmt)	S4 (Rcv)	S4 (Rcv)	S4 (Rcv)	S4 (Rcv)	S4 (Rcv)
6	$\overline{\text{ENABLE}}_{SYS}$	*	*	*	*	*
7	+5 V dc_{SYS}	*	*	*	*	*
8	5 V RTN_{SYS}	*	*	*	*	*
9	DRVA	*	*	*	*	*
10	DRVCT	*	*	*	*	*
11	DRVB	*	*	*	*	*
12	$PWRB_{FLD}$	*	*	*	*	*
13	$PWRCT_{FLD}$	*	*	*	*	*
14	$PWRA_{FLD}$	*	*	*	*	*
15	5 V RTN_{FLD}	*	*	*	*	*
16	+5 V dc_{FLD}	*	*	*	*	*
17	$ENABLE_{FLD}$	*	*	*	*	*
18	F0 (Rcv)	F0 (Rcv)	F0 (Rcv)	F0 (Rcv)	F0 (Rcv)	F0 (Xmt)
19	F1 (Rcv)	F1 (Rcv)	F1 (Rcv)	F1 (Rcv)	F1 (Xmt)	F1 (Xmt)
20	F2 (Rcv)	F2 (Rcv)	F2 (Rcv)	F2 (Xmt)	F2 (Xmt)	F2 (Xmt)
21	F3 (Rcv)	F3 (Rcv)	F3 (Xmt)	F3 (Xmt)	F3 (Xmt)	F3 (Xmt)
22	F4 (Rcv)	F4 (Xmt)	F4 (Xmt)	F4 (Xmt)	F4 (Xmt)	F4 (Xmt)

*Pin function is the same on all models, as shown in the AD260BND-0 column.

(*Continued from page* 1)

Integral Isolated Power: The AD260 includes an integral, uncommitted and flexible 1 Watt power transformer for developing isolated field power sources.

Field and System Enable Functions: Both the isolated and nonisolated sides of the AD260 have ENABLE pins that three-state all outputs. Upon reenabling these pins, all outputs are updated to reflect the current input logic level.

CE Certifiable: Simply by adding the external bypass capacitors at the supply pins, the AD260 can attain CE certification in most applications (to the EMC directive) and conformance to the low voltage (safety) directive is assured by the EN60950 certification.

GENERAL ATTRIBUTES

The AD260 provides five HCMOS/ACMOS compatible isolated logic lines with ≥ 10 kV/µs common-mode transient immunity.

The case design and pin arrangement provides greater than 18 mm spacing between field and system side conductors, providing CSA/IS and IEC creepage spacing consistent with 750 V mains isolation.

The five unidirectional logic lines have six possible combinations of "ins" and "outs," or transmitter/receiver pairs; hence there are six AD260 part configurations (see Table I).

Each 20 MHz logic line has a Schmidt trigger input and a three-state output (on the other side of the isolation barrier) and 14 ns of propagation delay. A single enable pin on either side of the barrier causes all outputs on that side to go three-state and all inputs (driven pins) to ignore their inputs and retain their last known state.

Note: All unused logic inputs (1–5) should be tied either high or low, but not left floating.

Edge "fidelity," or the difference in propagation time for rising and falling edges, is typically less than ±1 ns.

Power consumption, unlike opto-isolators, is a function of operating frequency. Each logic line barrier driver requires about 160 µA per MHz and each receiver 40 µA per MHz plus, of course, 4 mA total idle current (each side). The supply current diminishes slightly with increasing temperature (about –0.03%/°C).

The total capacitance spanning the isolation barrier is less than 10 pF.

The minimum width of a pulse that can be accurately coupled across the barrier is about 25 ns. Therefore the maximum square-wave frequency of operation is 20 MHz.

Logic information is sent across the barrier as "set-hi/set-lo" data that is derived from logic level transitions of the input. At power-up or after a fault condition, an output might not represent the state of the respective channel input to the isolator. An internal circuit operates in the background which interrogates all inputs about every 5 µs and in the absence of logic transitions, sends appropriate "set-hi" or "set-lo" data across the barrier.

Recovery time from a fault condition or at power-up is thus between 5 µs and 10 µs.

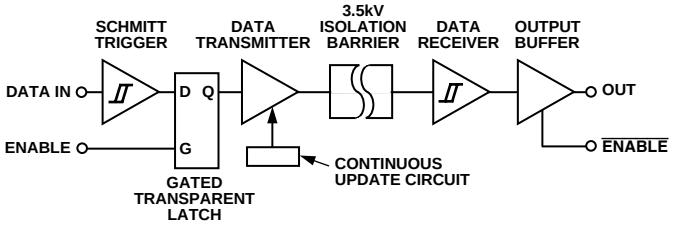

Figure 1. Simplified Block Diagram

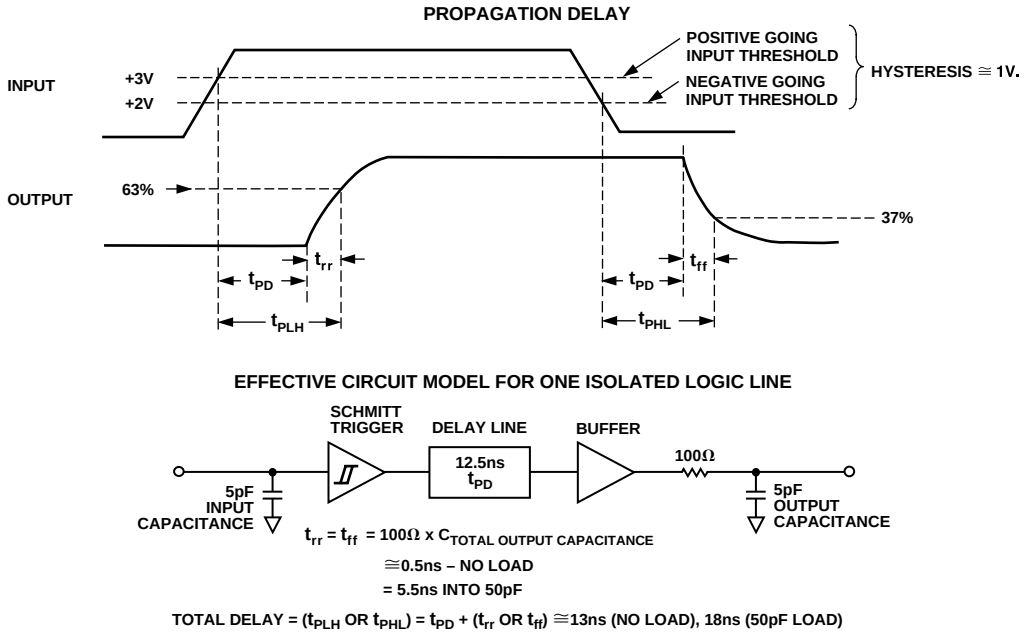

Figure 2. Typical Timing and Delay Models

The power transformer is designed to operate between 150 kHz and 250 kHz and will easily deliver more than 1 W of isolated power when driven push-pull (5 V) on the system side. Different transformer tap, rectifier and regulator schemes will provide combinations of ±5 V, 15 V, 24 V or even 30 V or higher. The output voltage when driven with a low voltage-drop drive (@ 5 V push-pull) will be 37 V p-p across the entire secondary. This will drop to 33 V p-p at 4.5 V drive.

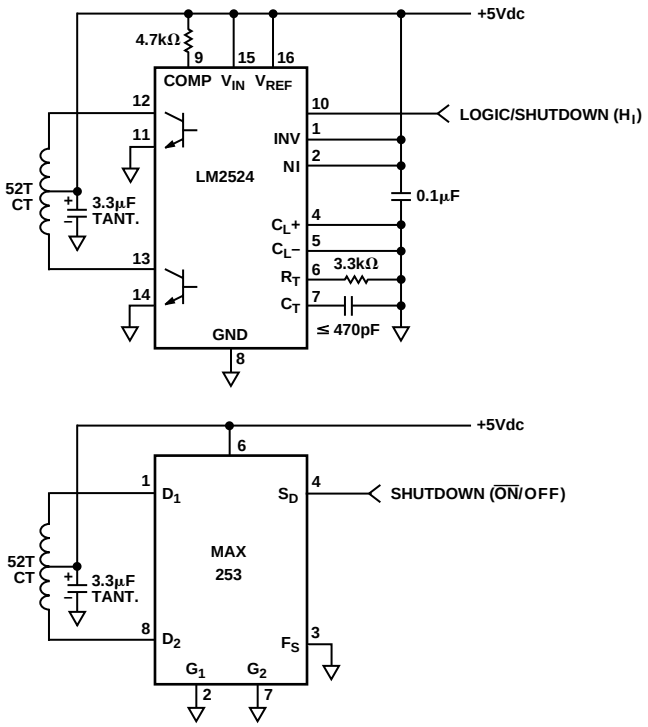

Figure 3. System Side Transformer Driver Examples

Application Examples

The following is an example of a typical transformer system-side drive circuit and a field-side regulation circuit suitable for use in most general applications.

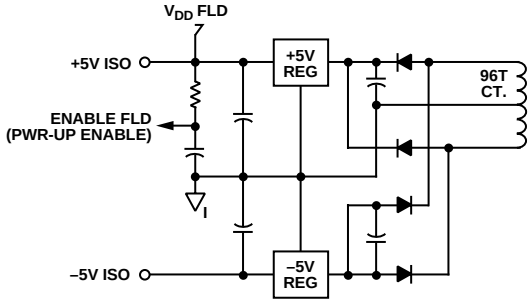

Figure 4.

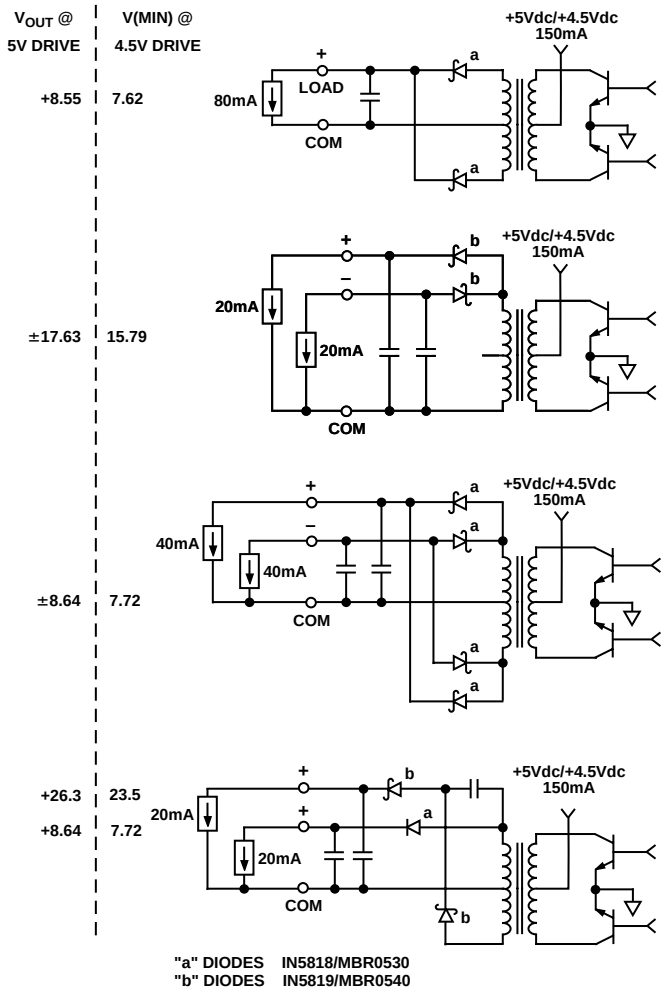

Figure 5. Field Side Power Supply Rectifier Examples

OUTLINE DIMENSIONS

Dimensions shown in inches and (mm).

22-Lead Plastic DIP (ND-22)

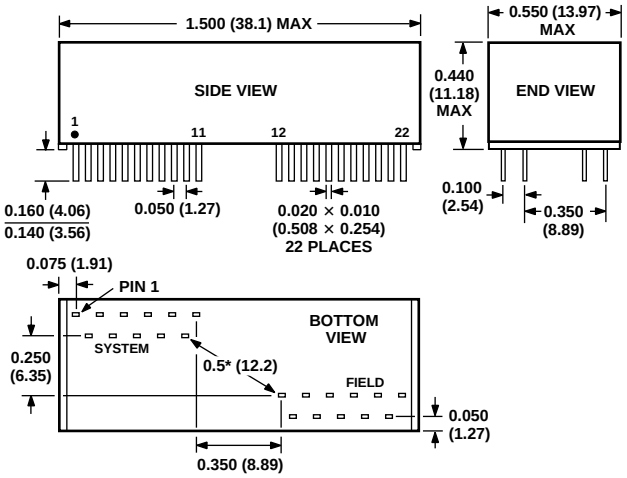

*CREEPAGE PATH (SUBTRACT APPROXIMATELY 0.079 (2mm) FOR SOLDER PAD RADII ON PC BOARD. THIS SPACING SUPPORTS THE INTRINSICALLY SAFE RATING OF 750V. WAVE SOLDERING IS NOT RECOMMENDED.

C3031–8–9/98

PRINTED IN U.S.A.

OCEAN CHIPS
Океан Электроники
Поставка электронных компонентов

Компания «Океан Электроники» предлагает заключение долгосрочных отношений при поставках импортных электронных компонентов на взаимовыгодных условиях!

Наши преимущества:

- Поставка оригинальных импортных электронных компонентов напрямую с производств Америки, Европы и Азии, а так же с крупнейших складов мира;
- Широкая линейка поставок активных и пассивных импортных электронных компонентов (более 30 млн. наименований);
- Поставка сложных, дефицитных, либо снятых с производства позиций;
- Оперативные сроки поставки под заказ (от 5 рабочих дней);
- Экспресс доставка в любую точку России;
- Помощь Конструкторского Отдела и консультации квалифицированных инженеров;
- Техническая поддержка проекта, помощь в подборе аналогов, поставка прототипов;
- Поставка электронных компонентов под контролем ВП;
- Система менеджмента качества сертифицирована по Международному стандарту ISO 9001;
- При необходимости вся продукция военного и аэрокосмического назначения проходит испытания и сертификацию в лаборатории (по согласованию с заказчиком);
- Поставка специализированных компонентов военного и аэрокосмического уровня качества (Xilinx, Altera, Analog Devices, Intersil, Interpoint, Microsemi, Actel, Aeroflex, Peregrine, VPT, Syfer, Eurofarad, Texas Instruments, MS Kennedy, Miteq, Cobham, E2V, MA-COM, Hittite, Mini-Circuits, General Dynamics и др.);

Компания «Океан Электроники» является официальным дистрибьютором и эксклюзивным представителем в России одного из крупнейших производителей разъемов военного и аэрокосмического назначения **«JONHON»**, а так же официальным дистрибьютором и эксклюзивным представителем в России производителя высокотехнологичных и надежных решений для передачи СВЧ сигналов **«FORSTAR»**.

AVIC JONHON

«JONHON» (основан в 1970 г.)

Разъемы специального, военного и аэрокосмического назначения:

(Применяются в военной, авиационной, аэрокосмической, морской, железнодорожной, горно- и нефтедобывающей отраслях промышленности)

«FORSTAR» (основан в 1998 г.)

ВЧ соединители, коаксиальные кабели, кабельные сборки и микроволновые компоненты:

(Применяются в телекоммуникациях гражданского и специального назначения, в средствах связи, РЛС, а так же военной, авиационной и аэрокосмической отраслях промышленности).

FORSTAR®

Телефон: 8 (812) 309-75-97 (многоканальный)
Факс: 8 (812) 320-03-32
Электронная почта: ocean@oceanchips.ru
Web: http://oceanchips.ru/
Адрес: 198099, г. Санкт-Петербург, ул. Калинина, д. 2, корп. 4, лит. А