MAGNUM

Connect with Magnum

Product Catalog

Make Wire Connections Simple and Fast

COOPER Bussmann

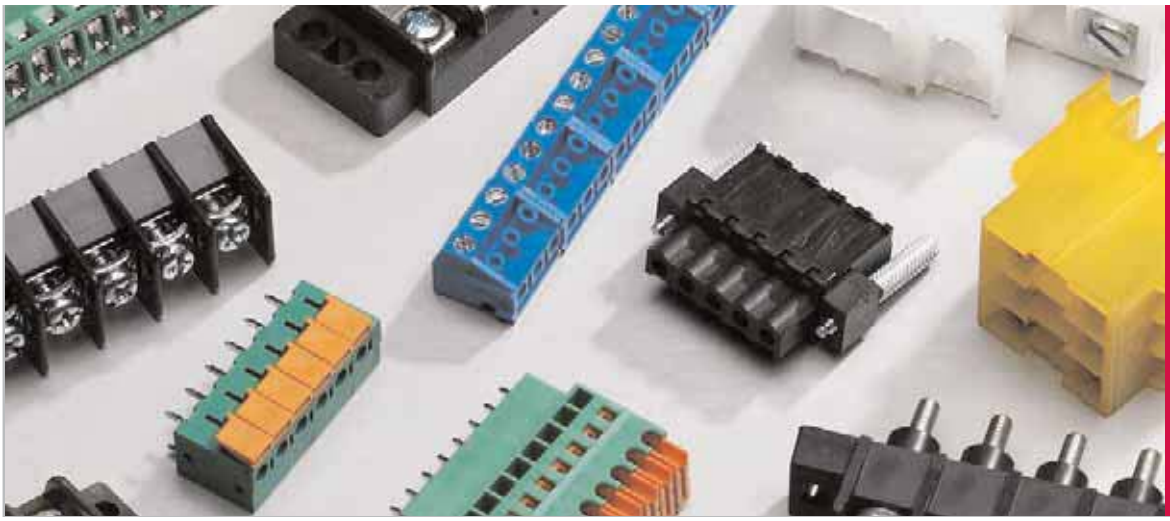

Connect with Magnum

Proven Products for Demanding Applications

For over 50 years, the Magnum name has stood for proven products, custom solutions, quality commitment and superior service – core strengths that help build long-term relationships with our customers.

Magnum quality products support a broad range of electronic and electrical OEM applications. Our product line offers the most comprehensive selection of barrier-style terminal blocks in the industry – as well as:

- North American-style terminal blocks — single row, double row and tri-barrier
- European-style terminal blocks — PCB mount (spring, cage, tiered, high current), screwless, and pluggable
- Power distribution blocks — barrier and dead front, splicer, stud type, multi-line, and power blocks
- Rail and base mount terminal blocks
- DIN rail sectional blocks
- Junction blocks — stud type and feed through
- Edge connectors — vertical and right angle mount

Electronic: Our electronic products, including PCB mountable North American and Euro-Mag® terminal blocks, are found in a variety of demanding applications:

- Industrial and environmental controls
- Instrumentation
- Security and alarm systems
- Traffic signals and controls
- Telecom
- Process logic control (PLC)
- Test and measurement
- Power supplies
- Elevators and conveyors

European-Style PCB Terminal Blocks: Magnum Euro-Mag® blocks come come in a variety of terminal options to make connections easy and in different wire-entry orientations to solve wire routing issues. These high high-current terminal blocks handle up to 115 amps right on the circuit board and are available in mold-to-length designs to provide the exact number of poles for a specific application.

Table of Contents

COOPER Bussmann

Terminal Blocks

Single Row

Series	*Centers*	*Page*
A5000 and CB5000	0.250”	1-2
A1000 and CB1000	0.325”	3-5
A2000, LP2000 and CB2000	0.375”	6-11
A3000, LP3000 and CB3000	0.437”	12-17
A38/B38	0.437”	18-19
A4000 and B4000	0.562”	20-22
All Series Accessories		23

Filtered

Series	*Centers*	*Page*
F38	0.437”	24

Double Row

Series	*Centers*	*Page*
TB100	0.375”	25-26
TB200 and TB200HB	0.437”	27-28
TB300 and TB345	0.562”	29-30
TB400	0.687”	31-32
Top and Bottom Marking Strips		33

Standard Base

Series	*Centers*	*Page*
TSXX01, TSXX02	8.00-13.50mm	34

Flat Base

Series	*Centers*	*Page*
TSXX03, TSXX04	8.00 and 10.00mm	35

Raised Base

Series	*Centers*	*Page*
TSXX05, TSXX06	8.00 and 10.00mm	36

EuroMag Series PCB Mount Terminal Blocks

Series	*Centers/Type*	*Page*
EM3123	3.50mm	38
EM2665	5.00mm	39
EM3660	5.00mm	40
EM3665	5.00mm	41
EM3675	5.00mm	42
EM3127	7.50mm	43
EM2661	10.00mm	44
EM3661	10.00mm	45
EM3671	10.00mm	46
EM3923	3.50mm	47
EM3503	3.81mm	48
EM2585	5.00mm	49
EM3225	5.00mm, 35°	50
EM2205	5.00mm, 45°	51
EM2505	5.08mm	52
EM3228	5.08mm, 35°	53
EM2507	7.50mm	54
EM3227	7.50mm, 35°	55
EM2506	7.62mm	56
EM3226	7.62mm, 35°	57
EM2403	9.52mm	58
EM2803	9.52mm, 35°	59
EM2445	5.00mm	60
EM2448	5.08mm	61
EM2855	6.35mm	62
EM2905	7.50mm	63
EM2908	7.62mm	64
EM9126	10.16mm	65
EM9127	15.00mm	66
EM9128	3.81mm, Two-Tier	67
EM2909	3.81mm, Three-Tier	68
EM2919	5.00mm, Two-Tier	69
EM2929	5.08mm, Two-Tier	70
EM2939	5.00mm, Three-Tier	71
EM3905	5.00mm, Two-Tier	72
EM3908	5.08mm, Three-Tier	73

EuroMag Series PCB Mount Screwless Terminal Blocks

Series	*Centers/Type*	*Page*
EM2742	2.54mm	74
EM2783	3.50mm, 45°	75
EM2802	2.54mm, 30°	76
EM2785	5.00mm, 45°	77
EM2778	5.08mm	78
EM2795	5.08mm	79
EM2796	7.62mm	80
EM2791	10.16mm	81
EM2816	7.62mm, 60°	82

EuroMag Series PCB Mount Pluggable Terminal Blocks

Series	*Centers/Type*	*Page*
EM3533	3.50mm, Plug	83
EM2221	3.50mm, Header	84
EM2413	3.50mm, Plug	85
EM2201	3.50mm, Header	86
EM3553	3.81mm, Plug	87
EM3543	3.81mm, Plug	88
EM3583	3.81mm, IDC Plug	89
EM3593	3.81mm, Header	90
EM2423	3.81mm, Plug	91
EM2443	3.81mm, Plug	92
EM2211	3.81mm, Header	93
EM2525	5.00mm, Plug	94
EM2485	5.00mm, Plug	95
EM3105	5.00mm, Plug	96
EM2535	5.00mm, Header	97
EM2565	5.08mm, Plug	98
EM2488	5.08mm, Plug	99
EM3108	5.08mm, Plug	100
EM2575	5.08mm, Header	101
EM2115	5.00mm, Plug	102
EM3115	5.00mm, Plug	103
EM2215	5.08mm, Plug	104
EM2118	5.00mm, Header	105
EM3118	5.08mm, Plug	106
EM2218	5.08mm, Header	107
EM3516	7.62mm, Plug	108
EM3526	7.62mm, Header	109
EM2416	7.62mm, Plug	110
EM2426	7.62mm, Header	111
EM5015	5.00mm, Plug	112
EM5025	5.00mm, Header	113
EM5035	5.00mm, Plug	114
EM5045	5.00mm, Header	115

This catalog is intended to present product data and provide technical information that will help the end user with design application. Cooper Bussmann reserves the right, without notice, to change design or construction or any products and to discontinue or limit distribution of any products. Cooper Bussmann also reserves the right to change or update, without notice, any technical information contained in this catalog. Once a product has been selected, it should be tested by the user in all possible applications. Further, Cooper Bussmann takes no responsibility for errors or omissions contained in this catalog, or for mis-application of any Cooper Bussmann product.
©2009 Cooper Bussmann

Rail Mount Terminal Blocks and Accessories 116

Series	*Centers*	*Page*
NDN63	0.375”	117
NDN1	0.635”	117
NDN11	0.635”	117
NDNV4	0.250”	118
NDN3	0.300”	118
N512	0.197”	119
NFT2	0.281”	119
NFT3	0.390”	119
NC3	1.06”	120
NSE3	1.06”	120
NSS3	0.385”	120

Deplugable Rail Mount Terninal Blocks

Series	*Centers*	*Page*
PLU3	0.390”	121
PLU1	0.625”	121
PSU1	0.625”	121

Rail Mount Fuse Holding Terminal Blocks

Series	*Page*
NDNF1	122
NDND1 (Non Fused)	122
NDFD1 (Fuse)	122
NDNFLFD1 (Fused with Visual Indicator)	122

Quick Connect Terminal Blocks

Series	*Centers*	*Page*
NTQ23	0.390”	123
BNQ21	0.437”	123
BQQ41	0.437”	123

Base Mount Terminal Blocks

Series	*Centers*	*Page*
KT3	0.390”	124
KT4	0.250”	124
PLK3	0.390”	124

Disconnect Terminal Blocks

Series	*Centers*	*Page*
15188	0.375”	125
15288	0.54”	126

Base Mount Double Row Terminal Blocks

Series	*Centers*	*Page*
KU	0.625”	127

Quick-Connect Power Distribution Blocks

Series	*Centers*	*Page*
11675	0.56”	128
11725	0.68”	128

Barrier Terminal Blocks

Series	*Page*
14002	129

Dead Front Terminal Blocks

Series	*Centers*	*Page*
14004	0.50”	129

Splicer Terminal Blocks

Series	*Page*
160, 162, 163 and 165	130

Power Distribution Blocks

Series	*Page*
Finger-Safe	131
160, 162, 163 and 16	132

Connector/Stud Power Distribution Blocks

Series	*Page*
162, 163 and 165	133

Power Blocks

Series	*Centers*	*Page*
EN	1.78”	134

Wire Management Products

Series	*Page*
Photo Control Receptacle	**135**

Stud Type Junction Blocks

Series/Type	*Centers*	*Page*
C4559 and C6083	0.75”	136
C5237 and JB1032	0.625”	136-137

Power Feed Thru Terminal Blocks

Series	*Centers*	*Page*
C7021	0.69”	138
C7024	0.750”	139

Depluggable PCB Mount Terminal Blocks

Series	*Centers*	*Page*
15133	0.375”	140

Edge Connectors - One-Sided Boards

Vertical Mount

Series	*Centers*	*Page*
1384X	0.375”	141

Right Angle Mount

Series	*Centers*	*Page*
15104	0.375”	142

Compliance References 143

This catalog is intended to present product data and provide technical information that will help the end user with design application. Cooper Bussmann reserves the right, without notice, to change design or construction or any products and to discontinue or limit distribution of any products. Cooper Bussmann also reserves the right to change or update, without notice, any technical information contained in this catalog. Once a product has been selected, it should be tested by the user in all possible applications. Further, Cooper Bussmann takes no responsibility for errors or omissions contained in this catalog, or for mis-application of any Cooper Bussmann product.
©2009 Cooper Bussmann

Series A5000 & Series CB5000

Single Row Terminal Blocks

SPECIFICATIONS

Rating: 10A, 300V*
Center Spacing: 0.250” (6.35mm)
Wire Range: #18-30 AWG CU
Screw Size: #3-48 zinc-plated philslot SEMS screws, wire-ready standard
Torque Rating: 4 lb-in.
Distance Between Barriers: 0.20” (5.08mm)
Recommended PCB Hole Diameter: 0.062” (1.57mm)
Operating Temperature: 105°C (221°F) max., -40°C (-40°F) min.
Molded Material: Black, UL Rated 94V0 Thermoplastic
Breakdown Voltage: 1600V rms
Agency Information: UL File E62622; CE Certified

* Max. rating shown; some options may be rated lower – consult factory.

	MOUNTING ENDS		BARRIER ENDS	
Poles	A Mount Centers	B Overall Length	A Pole Centers	B Overall Length
02	0.75	1.06	0.25	0.56
03	1.00	1.31	0.50	0.81
04	1.25	1.56	0.75	1.06
05	1.50	1.81	1.00	1.31
06	1.75	2.06	1.25	1.56
07	2.00	2.31	1.50	1.81
08	2.25	2.56	1.75	2.06
09	2.50	2.81	2.00	2.31
10	2.75	3.06	2.25	2.56
11	3.00	3.31	2.50	2.81
12	3.25	3.56	2.75	3.06
13	3.50	3.81	3.00	3.31
14	3.75	4.06	3.25	3.56
15	4.00	4.31	3.50	3.81
16	4.25	4.56	3.75	4.06
17	4.50	4.81	4.00	4.31
18	4.75	5.06	4.25	4.56
19	5.00	5.31	4.50	4.81
20	5.25	5.56	4.75	5.06
21	5.50	5.81	5.00	5.31
22	5.75	6.06	5.25	5.56
23	6.00	6.31	5.50	5.81
24	6.25	6.56	5.75	6.06
25	6.50	6.81	6.00	6.31
26	6.75	7.06	6.25	6.56
27	7.00	7.31	6.50	6.81
28	7.25	7.56	6.75	7.06
29	–	–	7.00	7.31
30	–	–	7.25	7.56

* Dimensions in inches. To convert to millimeters, multiply by 25.4.

Dimensions - in (mm)

A5000 Series

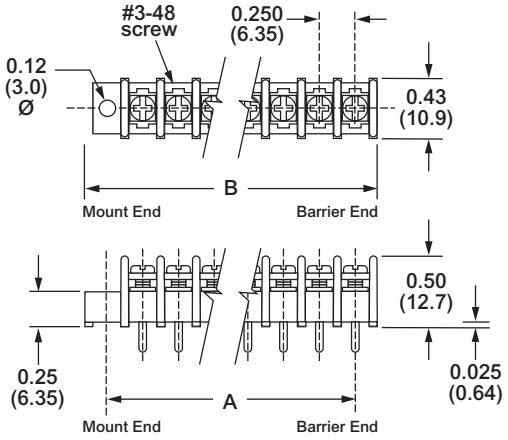

CB5000 Series

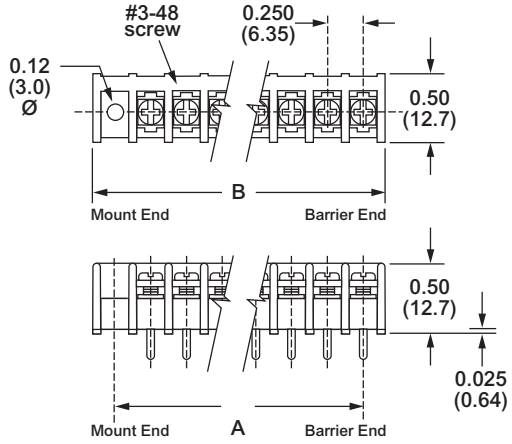

Terminal Blocks: Single & Double Row
EuroMag Series
Terminal Blocks: Base & Rail Mount
Power Distribution Blocks
Wire Management Products
Edge Connectors, One-Sided Boards
Compliance References

Part Numbering System

Series	Terminal Style	Base/End	Poles	Screw Options	Options
A 5 C B 5	☐☐	☐	☐☐	☐☐	☐☐☐
A5 - standard barrier **CB5** - closed back	**01** - handwired **02** - printed circuit **03** - non feed-thru **04** - wire wrap tail	**1** - mount end **2** - barrier end	**02** to **30** **02** to **28** on mount end base	**07** - steel SEMS std. wire ready	**C1** to **C8** - 0.110″ QC **L1** to **L6** marking options (pg 22) **LT1** to **LT6** marking options (CB5 only-pg 22) **MP** - mounting plate 0.120″ dia *__OJ__ - over barrier jumper **S1** - single solder lug/flat **S2** - double solder lug/flat (A5 only) *Contact factory for configuration

Terminal Styles

Inches (Millimeters)

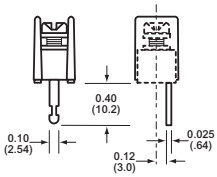

01
Handwired

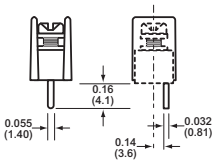

02
Circuit Board

03
Non Feed-Thru

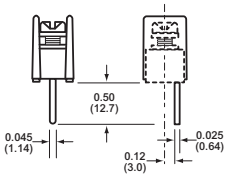

04
Wire Wrap Tail

CB5 Terminal Exit Options

Inches (Millimeters)

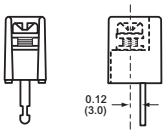

Exit Rear (std.)

Screw Options

Wire ready screws standard on all terminal styles **(Bulk ordering part numbers are in parentheses.)**

07
Steel SEMS
Zinc-Plated
(B001-7035-J)

07
Standard
Wire Ready

Hardware Options

(Bulk ordering part numbers are in parentheses.)

Inches (Millimeters)

Jumpers

(OJ12-J)

Quick Connects Blade Width 0.110” (For other orientations, contact factory.)

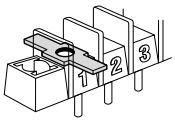

(5C1-J)*

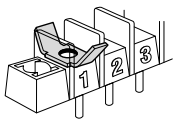

(5C2-J)*

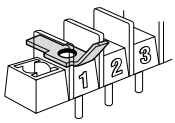

(5C4-J)*

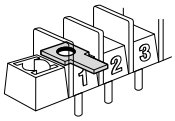

C7 (5C7-J)

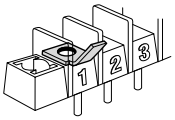

C8 (5C8-J)

**** N/A on CB5 Series.***

Solder Lugs

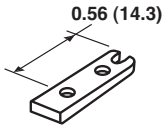

S1 (5S1-J)

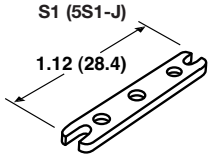

S2 (5S2-J)

Series A1000 & Series CB1000

Single Row Terminal Blocks

SPECIFICATIONS

Rating: 20A, 250V*
Center Spacing: 0.325” (8.26mm)
Wire Range: #14-22 AWG CU
Screw Size: #6-32 zinc-plated philslot wire-ready screws with a #2 driving recess.
Torque Rating: 9 lb-in.
Base: Standoffs are standard on CB1000 Series for easy flux washing.
Distance Between Barriers: 0.26” (6.6mm)
Recommended PCB Hole Diameter: 0.070” (1.78mm)
Operating Temperature: 105°C (221°F) max., -40°C (-40°F) min.
Molded Material: Black, UL Rated 94V0 Thermoplastic
Breakdown Voltage: 1600V
Agency Information: UL/CSA; IEC Compliance; CE Certified; UL File: E62622, CSA File: 15364

*General industrial applications

Poles	MOUNTING ENDS ONLY A Mount Ctrs.	MOUNTING ENDS ONLY C Length	BARRIER & MOUNTING ENDS B Pole Ctrs.	BARRIER ENDS ONLY C Length
02	0.98	1.37	0.33	0.72
03	1.30	1.69	0.65	1.04
04	1.63	2.02	0.98	1.37
05	1.95	2.34	1.30	1.69
06	2.28	2.67	1.63	2.02
07	2.60	2.99	1.95	2.34
08	2.93	3.32	2.28	2.67
09	3.25	3.64	2.60	2.99
10	3.58	3.97	2.93	3.32
11	3.90	4.29	3.25	3.64
12	4.23	4.62	3.58	3.97
13	4.55	4.94	3.90	4.29
14	4.88	5.27	4.23	4.62
15	5.20	5.59	4.55	4.94
16	5.53	5.92	4.88	5.27
17	5.85	6.24	5.20	5.59
18	6.18	6.57	5.53	5.92
19	6.50	6.89	5.85	6.24
20	6.83	7.22	6.18	6.57
21	7.15	7.54	6.50	6.89
22	7.48	7.87	6.83	7.22
23	7.80	8.19	7.15	7.54
24	8.13	8.52	7.48	7.87
25	8.45	8.84	7.80	8.19
26	8.78	9.17	8.13	8.52
27	9.10	9.49	8.45	8.84
28	9.43	9.82	8.78	9.17
29	9.75	10.14	9.10	9.49
30	10.08	10.47	9.43	9.82
31	10.40	10.79	9.75	10.14
32	10.73	11.12	10.08	10.47
33	11.05	11.44	10.40	10.79
34	11.38	11.77	10.73	11.12
35	–	–	11.05	11.44
36	–	–	11.38	11.77

* Dimensions in inches. To convert to millimeters, multiply by 25.4.

Dimensions - in (mm)

A1000 Series

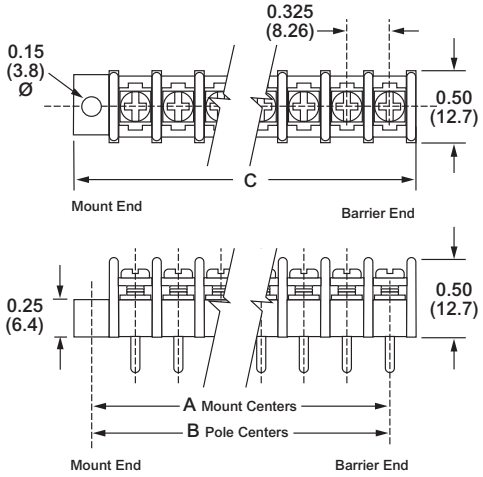

CB1000 Series

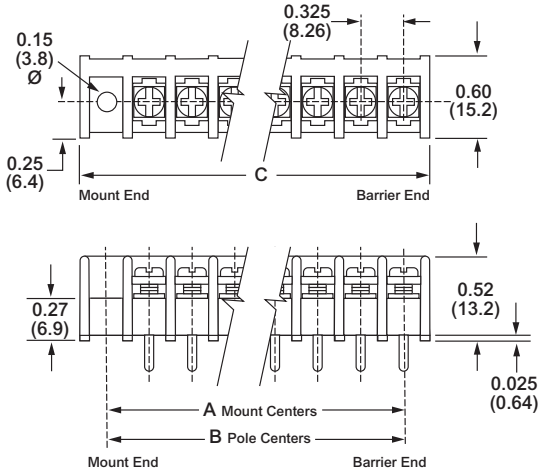

Part Numbering System

Series

A 1

C B 1

A1 - standard barrier
CB1 - closed back

Terminal Style

02 - printed circuit
03 - non feed-thru
04 - wire wrap tail
07 - extended pin

Base/End

1 - mount end
2 - barrier end

Poles

02 to **36**
02 to **34** on mount end base

Screw Options

Blank - std. screws
03 - stainless steel
04 - nickel brass
07 - steel SEMS & washer (not available with hardware options)
09 - brass/nickel-plated SEMS
CA - standard captive screw

Options

AB & **DR** - angle mts. (A1 only-pg 5)
B1 to **B9** - 0.187" QC (all positions)
EB - exit back terminals on CB1 w/07 screw option only
†**JA**, **JB** & **JC** - barrier jumpers
L1 to **L6** marking options (pg 22)
LT1 to **LT6** marking options (CB1 only-pg 22)
MP & **MT** - mounting plates 0.150 dia (pg 5)
R26 & **R45** - right angle bends (A1 only-pg 5)

Covers - (pg 23)

Terminal Styles

Inches (Millimeters)

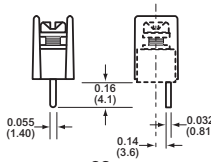

02
Printed Circuit

03
Non Feed-Thru

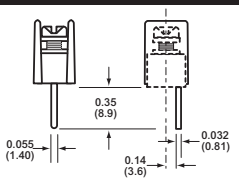

04
Wire Wrap Tail

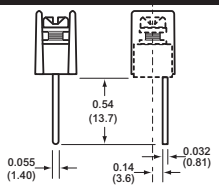

07
Extended Pin

Screw Options

Wire ready screws standard on all terminal styles

Standard
Zinc-Plated Steel

03
Stainless Steel

04
Brass Nickel-Plated

07
Steel SEMS Zinc-Plated

09
Nickel-plated Brass Screws

CB1 Terminal Exit Options

Inches (Millimeters)

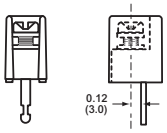

Exit Rear (std.)

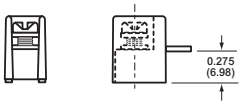

EB
Exit Back

Hardware Options

(Bulk ordering part numbers are in parentheses.)

Inches (Millimeters)

Jumpers

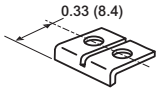

√JA (JA1-XX)

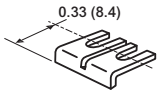

†JB (JB1-XX)

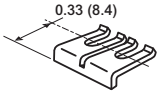

†JC (JC1-XX)

Quick Connects Blade Width B = 0.187". (For other orientations, contact factory.)

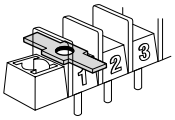

B1 (1B1-J) *

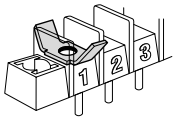

B2 (1B2-J) *

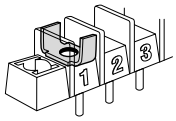

B3 (1B3-J) *

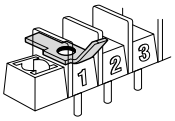

B4 (1B4-J) *

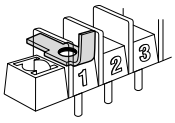

B5 (1B5-J) *

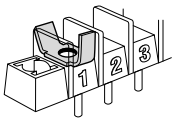

B6 (1B6-J) *

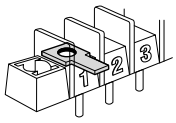

B7 (1B7-J)

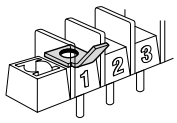

B8 (1B8-J)

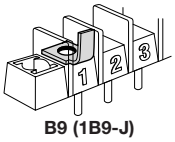

B9 (1B9-J)

**** N/A on CB1 Series.***

†Contact factory for pole configuration.

Series A1000 & CB1000

Single Row Terminal Blocks *Continued*

Mounting Options

Inches (Millimeters)

Right Angle Bends (A1 only)

Right angle terminals are offered on the A1000 Series. Configurations are defined in these dimensions: X = pin extension beyond the block base; Z = length from block base to centerline of the terminal tip. Standard bends consist of the X and Z dimensions shown in the chart. Specify by adding the selected Bend Option Code to the terminal part number.

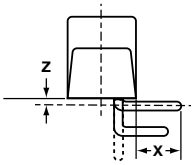

Bend Option Code	X (minimum)	Z
R26 (04 terminal only)	0.14 (3.5)	0.09 (2.3)
R45 (07 terminal only)	0.33 (8.4)	0.09 (2.3)

Dimensions in inches. To convert to millimeters, multiply by 25.4.

Angle Brackets (A1 only)

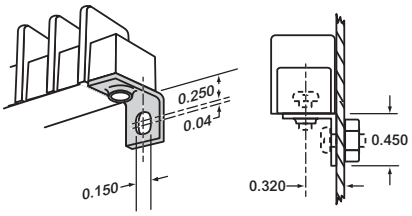

Option AB
Angle brackets enable block to be fastened at right angles to normal mount position. Bulk part number **1AB-J**.

Drilled Right Angle (A1 only)

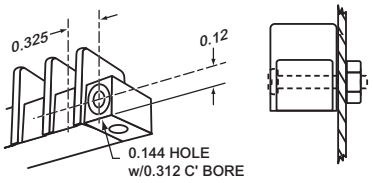

Option DR
Counterbored holes across mount ends of block enable fastening with two screws at right angles to normal mount position.

Mounting Plates

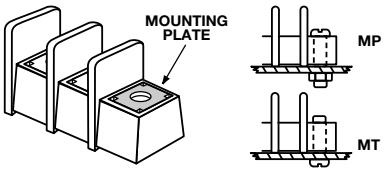

Options MP & MT
MP Metal inserts with 0.150" (3.8) dia. hole accept
#6 screw. **MT** Metal inserts with tapped hole accept #6-32 screw.
Bulk part numbers **1MP-J** & **1MT-J**.

Terminal Blocks: Single & Double Row
EuroMag Series
Terminal Blocks: Base & Rail Mount
Power Distribution Blocks
Wire Management Products
Edge Connectors, One-Sided Boards
Compliance References

Series A2000, LP2000 & CB2000

Single Row Terminal Blocks

SPECIFICATIONS

Rating: A2: 30A, 300V*
LP2: 30A, 150V*
CB2: 30A, 300V*
Center Spacing: 0.375" or 3/8" (9.52mm)
Wire Range: #12-22 AWG CU
Screw Size: #6-32 zinc-plated philslot
Torque Rating: 9 lb-in.
Base: Standoffs standard for easy flux washing
Distance Between Barriers: 0.32" (8.1mm)
Recommended PCB Hole Diameter: 0.076" (1.93mm)
Operating Temperature: 105°C (221°F) max., -40°C (-40°F) min.
Molded Material: Black, UL Rated 94V0 Thermoplastic
Breakdown Voltage: 3400V (A2 & LP2); 4100V (CB2).
Agency Information: UL File E62622, CSA File 47235; IEC Compliance; CE Certified

**30A Rating achieved with a #10 copper wire crimped to a ring terminal.; 20A Rating without ring terminal.*

Poles	MOUNTING ENDS ONLY A Mount Ctrs.	MOUNTING ENDS ONLY C Length	BARRIER & MOUNTING ENDS B Pole Ctrs.	BARRIER ENDS ONLY C Length
02	1.13	1.56	0.38	0.81
03	1.50	1.93	0.75	1.18
04	1.88	2.30	1.13	1.56
05	2.25	2.68	1.50	1.93
06	2.63	3.06	1.88	2.31
07	3.00	3.43	2.25	2.68
08	3.38	3.81	2.63	3.06
09	3.75	4.18	3.00	3.43
10	4.13	4.56	3.38	3.81
11	4.50	4.93	3.75	4.18
12	4.88	5.31	4.13	4.56
13	5.25	5.69	4.50	4.93
14	5.63	6.06	4.88	5.31
15	6.00	6.43	5.25	5.68
16	6.38	6.81	5.63	6.06
17	6.75	7.18	6.00	6.43
18	7.13	7.56	6.38	6.81
19	7.50	7.93	6.75	7.18
20	7.88	8.31	7.13	7.56
21	8.25	8.68	7.50	7.93
22	8.63	9.06	7.88	8.31
23	9.00	9.43	8.25	8.68
24	9.38	9.81	8.63	9.06
25	9.75	10.18	9.00	9.43
26	10.13	10.56	9.38	9.81
27	10.50	10.93	9.75	10.18
28	10.88	11.31	10.13	10.55
29	11.25	11.68	10.50	10.93
30	11.63	12.05	10.88	11.31
31	–	–	11.25	11.68
32	–	–	11.63	12.05

* Dimensions in inches. To convert to millimeters, multiply by 25.4.

Dimensions - in (mm)

A2000 & LP2000 Series

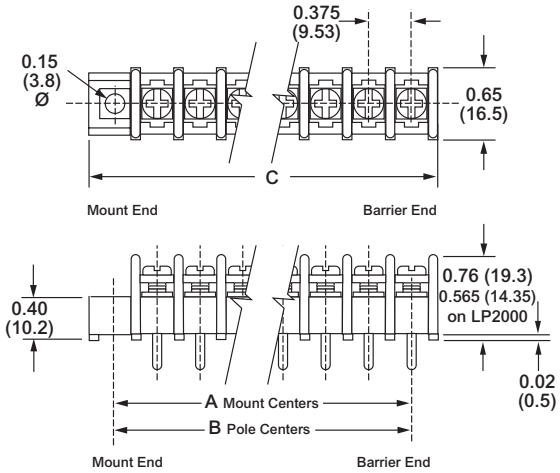

CB2000 Series

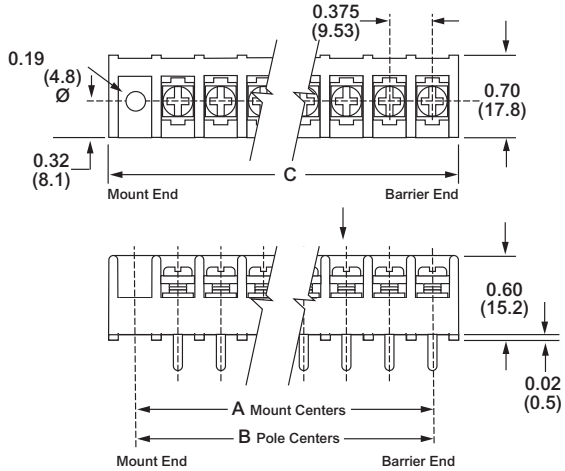

COOPER Bussmann

Series A2000 & LP2000

Single Row Terminal Blocks

Part Numbering System

Series	Terminal Style	Base/End	Poles	Screw Options	Options
A2 LP2	☐☐	☐	☐☐	☐☐☐☐	☐☐☐
A2 - standard barrier **LP2** - low profile barrier	**01** - handwired **02** - printed circuit **03** - non feed-thru **04** - wire wrap tail **05** - extended handwired **06** - handwired **07** - extended pin **08** - printed circuit **09** - 0.250″ QC short **10** - 0.187″ QC **14** - printed circuit **19** - 0.250″ QC long	**0** - flat base/molded mount end **1** - flat base/mnt. end **2** - flat base/barrier end **3** - insulator base/mnt. end **4** - insulator base/ barrier end **5** - closed base/ mount end **6** - closed base/ molded mount end **9** - insulator base/ molded mount end Base/End Note: 0, 6, 9 styles not available with covers. 5 & 6 Styles only available with 03 terminals.	**02** to **32** **02** to **30** on mount end base	Blank - std. screw **00** - screws shipped bulk **03** - stainless steel **04** - brass nickel-plated **07** - steel SEMS (not available with hardware options) **09** - brass SEMS nickel-plated (not available with hardware options) **CA** - captive screw **WR** - wire ready (not available on LP2 series)	**AB** - angle mnt. options (pg 9) **A1** to **A9** - 0.250″ QC **B1** to **B9** - 0.187″ QC **DR** - drilled right angle (pg 9) †**JA**, **JB** & **JC** - barrier jumpers **L1** to **L6** marking options (pg 22) **MP, MP8** & **MT** mounting plates (pg 9) †**OJ2** & **OJ4** - over barrier jumpers (not available w/covers) **RC** - retaining clips (pg 9) **R30** to **R77** - right angle bends (pg 9) **SO** - stand off insulators (pg 9) **S1** - solder lug/flat **Covers** - (pg 23)

†Contact factory for configuration..

Terminal Styles

Inches (Millimeters)

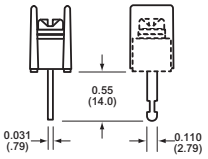

01
Handwired

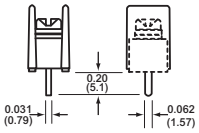

02
Printed Circuit

03
Non Feed-Thru

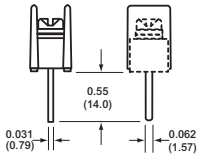

04
Wire Wrap Tail

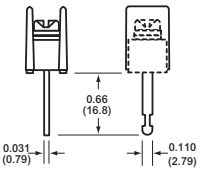

05
Extended Handwired

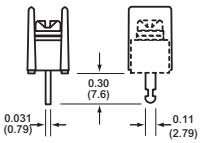

06
Handwired

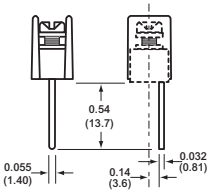

07
Extended Pin

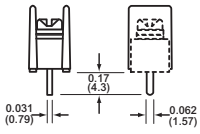

08
Printed Circuit

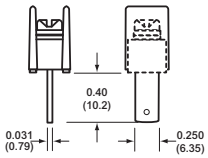

09
0.250″ QC short

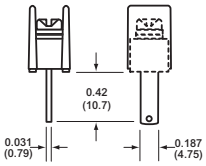

10
0.187″ QC

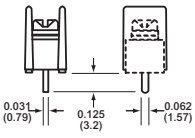

14
Printed Circuit

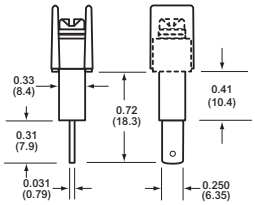

19
√0.250″ QC long

Series A2000 & LP2000

Single Row Terminal Blocks *Continued*

Screw Options

Standard
zinc-plated Steel

03
Stainless Steel

04
Brass
Nickel-Plated

07
Steel SEMS

09
Brass SEMS
Nickel-Plated

WR
Wire Ready

Hardware Options (Bulk ordering part numbers are in parentheses.)

Inches (Millimeters)

Solder Lugs

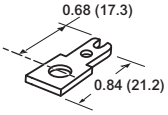

S1
(2S1-J)

Jumpers

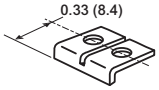

†JA
(JA2-XX-J)

†OJ2
(OJ2-J)

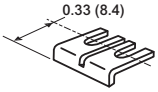

†JB
(JB2-XX-J)

†OJ4
(OJ4-J)

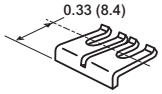

†JC
(JC2-XX-J)

†Contact factory for configuration.

Quick Connects
Blade Width A = 0.250" Blade Width B = 0.187"

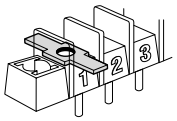

A1 & B1
(2A1-J & 2B1-J)

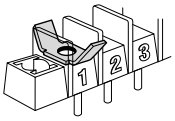

A2 & B2
(2A2-J & 2B2-J)

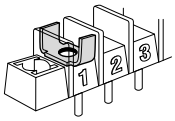

A3 & B3
(2A3-J & 2B3-J)

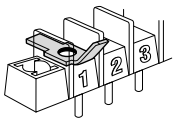

A4 & B4
(2A4-J & 2B4-J)

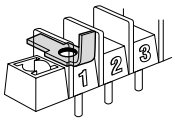

A5 & B5
(2A5-J & 2B5-J)

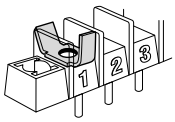

A6 & B6
(2A6-J & 2B6-J)

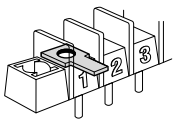

A7 & B7
(2A7-J & 2B7-J)

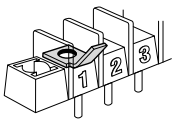

A8 & B8
(2A8-J & 2B8-J)

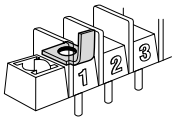

A9 & B9
(2A9-J & 2B9-J)

Base/End Options

Inches (Millimeters)

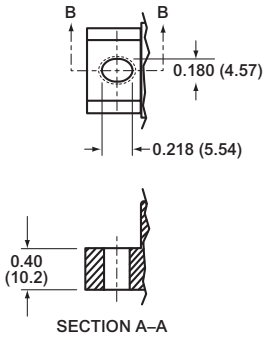

0, 6 & 9
Molded Mount End

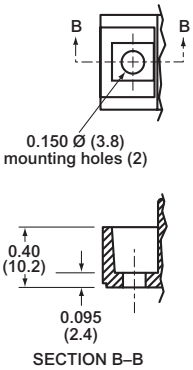

1, 3 & 5
Mount End

Series A2000 & LP2000

Single Row Terminal Blocks *Continued*

Mounting Options

Right Angle Bends (A2, LP2 only)

Right angle terminals are offered on the A2000 & LP2000 Series. Configurations are defined in these dimensions: X = pin extension beyond the block base; Z = length from block base to centerline of the terminal tip. Standard bends consist of the X and Z dimensions shown in the chart. Specify by adding the selected Bend Option Code to the terminal part number.

04 Terminal Bend Configurations

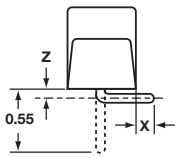

Bend Option Code	X (minimum)	Z	Available w/insulator base
R30	0.04	0.28	No
R35	0.01	0.23	No
R36	0.02	0.22	No
R39	0.05	0.19	No
R42	0.08	0.16	No
R46	0.12	0.12	No
R48	0.14	0.10	No
R50	0.16	0.08	No

07 Terminal Bend Configurations

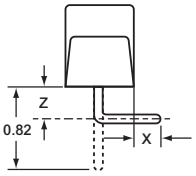

Bend Option Code	X (minimum)	Z	Available w/insulator base
R30	0.04	0.55	Yes
R35	0.01	0.50	Yes
R36	0.02	0.49	Yes
R42	0.08	0.43	Yes
R46	0.12	0.39	Yes
R50	0.16	0.35	No
R53	0.19	0.32	No
R66	0.32	0.19	No
R69	0.35	0.16	No
R75	0.41	0.10	No
R77	0.43	0.08	No

Dimensions in inches. To convert to millimeters, multiply by 25.4.

Angle Brackets (A2, LP2 only)

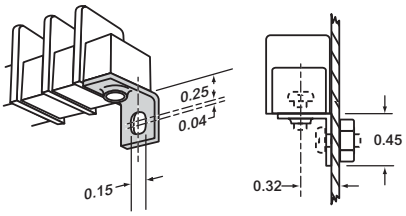

Option AB
Angle brackets enable block to be fastened at right angles to normal mount position. Bulk part number **2AB-J**.

Drilled Right Angle (A2, LP2 only)

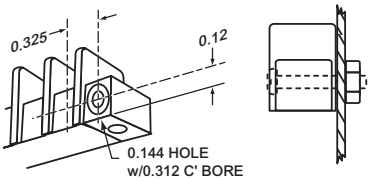

Option DR
Counterbored holes across mount ends of block enable fastening with two screws at right angles to normal mount position.

Mounting Plates

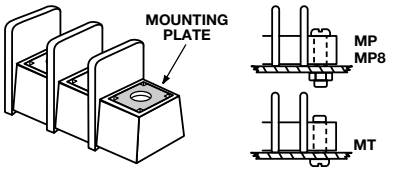

Options MP, MP8 & MT
MP Metal inserts with 0.150" dia. hole accept #6 screw. **MP8** Metal inserts with 0.187" dia. hole accept #8-32 screw. **MT** Metal inserts with tapped hole accept #6-32 screw.

Standoffs

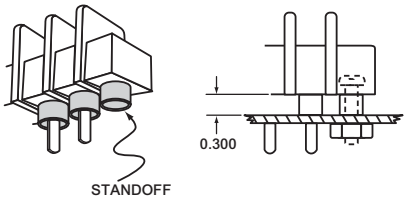

Option SO
Standoff mounts are tubes molded to the mounting positions. Available with insulator bases only.

Retaining Clip

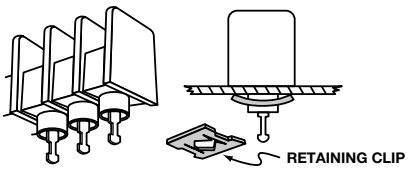

Option RC
Use on standoff tubes. Fit panels up to 0.125" thick. Two clips for every five positions. Supplied unassembled. Bulk part number **H541-J**.

Series CB2000

Single Row Terminal Blocks

Part Numbering System

Series	Terminal Style	Base/End	Poles	Screws	Options
CB2	☐☐	☐	☐☐	☐☐☐☐	☐☐☐
CB2 - closed back	**01** - handwired **02** - printed circuit **03** - non feed-thru **07** - extended pin **14** - printed circuit **22** - dual tail printed circuit	**1** - mount end **2** - barrier end	**02** to **32** **02** to **30** on mount end base	**03** - stainless steel **04** - brass nickel-plated **07** - steel SEMS standard **09** - brass SEMS nickel-plated **CA** - captive screw **07CA** - SEMS captive	*__AB__ - angle mounting brackets (pg 11) **A7** to **A9** - 0.250" QC **B7** to **B9** - 0.187" QC **EB** - exit back terminals **EF** - exit front terminals †**JA**, **JB** & **JC** - barrier jumpers **L1** to **L6** marking options (pg 22) **LT1** to **LT6** marking options (pg 22) †**OJ2** & **OJ4** - over barrier jumpers **MP, MP8, MT** & **MT8** mtg. plates (pg 11) **S1** - solder lug/flat

*Only available on 3-poles and up.
†Contact factory for configuration.

Terminal Styles

Inches (Millimeters)

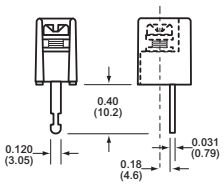

01
Handwired

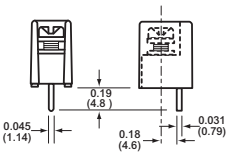

02
Printed Circuit

03
Non Feed-Thru
Available on Mount
End (1) only.

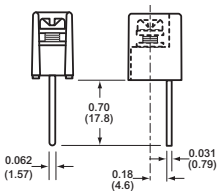

07
Extended Pin

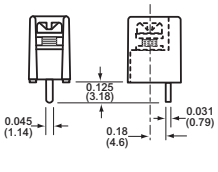

14
Printed Circuit

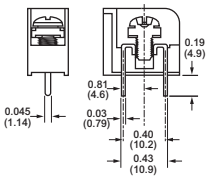

22
Dual Tail
Printred Circuit

Screw Options (Bulk ordering part numbers are in parentheses.)

03
Stainless Steel
(F507-J)

04
Brass
nickel-plated
(F506-J)

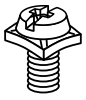

07
Steel SEMS
zinc-plated
(BOO1-7084-J)

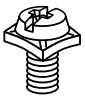

09
Brass SEMS
nickel-plated
(F524-J)

**** NOTE: Wire ready screws standard on all terminal styles.***

CB2 Terminal Exit Options

Inches (Millimeters)

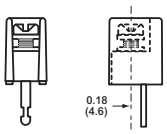

Exit Rear (std.)

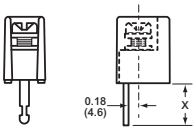

EF Exit Front

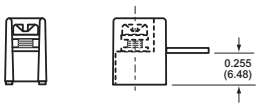

EB Exit Back

Series CB2000

Single Row Terminal Blocks

Hardware Options (Bulk ordering part numbers are in parentheses.)

Inches (Millimeters)

Solder Lugs

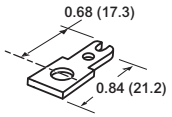

S1
(2S1-J)

Jumpers

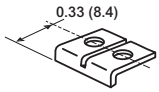

†JA
(JA2-XX-J)

†OJ2
(OJ2-J)

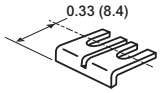

†JB
(JB2-XX-J)

†OJ4
(OJ4-J)

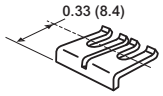

†JC
(JC2-XX-J)

Quick Connects
Blade Width A = 0.250". Blade Width B = 0.187".

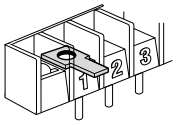

A7 & B7
(2A7-J & 2B7-J)

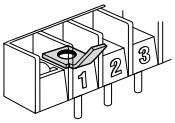

A8 & B8
(2A8-J & 2B8-J)

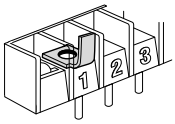

A9 & B9
(2A9-J & 2B9-J)

†Contact factory for configuration.

Mounting Options

Inches (Millimeters)

Right Angle Mounting Bracket

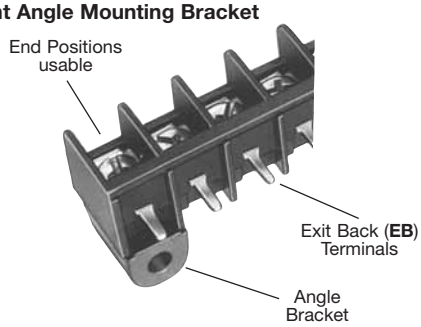

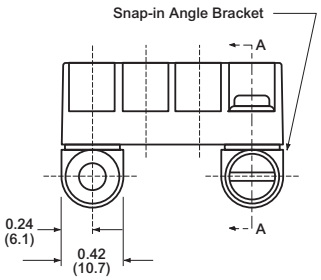

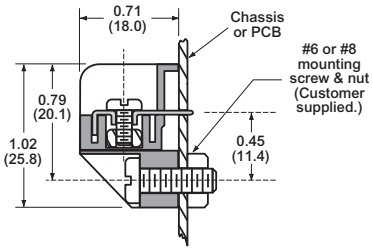

Option AB

Mounts blocks on PC boards at a right angle.
- Protects solder joints.
- Recommended for all EB (Exit Back) PCB terminal blocks.
- Bracket snaps securely on block (no hardware required).
- Minimum strip length (end positions are usable).
- Mount with #6-32 or #8-32 screws (not supplied).

Mounting Plates

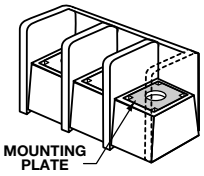

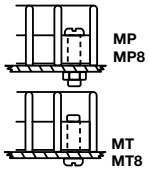

Options MP, MP8, MT & MT8
MP Metal inserts with 0.150" dia. hole accept #6 screw.
MP8 Metal inserts with 0.187" dia. hole accept #8-32 screw.
MT Metal inserts with tapped hole accept #6-32 screw.
MT8 Metal inserts with tapped hole accept #8-32 screw.

Series A3000, LP3000 & CB3000

Single Row Terminal Blocks

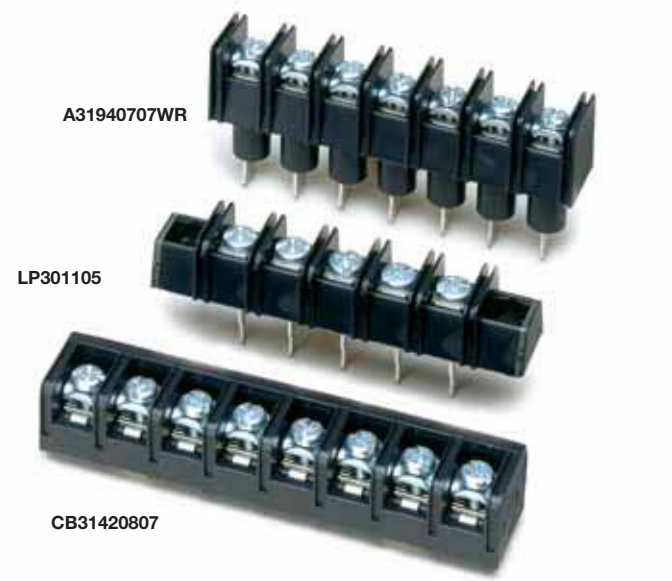

SPECIFICATIONS

Rating: A3: 30A, 600V* #12-22 AWG
LP3: 30A, 150V #12-22 AWG
CB3: 30A, 600V #12-22 AWG
Wire Range: #12-22 AWG CU
Center Spacing: 0.437" or 7/16" (11.10mm)
Screw Size: #6-32 zinc-plated philslot screws.
Torque Rating: 9 lb-in.
Base: Standoffs standard for easy flux washing.
Distance Between Barriers: 0.32" (8.1mm)
Recommended PCB Hole Diameter: 0.076" (1.93mm)
Operating Temperature: 105°C (221°F) max., -40°C (-40°F) min.
Molded Material: Black, UL Rated 94V0 Thermoplastic
Breakdown Voltage: 3500V (A3 & LP3); 8200V (CB3)
Agency Information: UL File E62622, CSA 47235; IEC Compliance, CE Certified

*30A Rating achieved with a #10 copper wire crimped to a ring terminal; 20 Rating without ring terminal.

	MOUNTING ENDS ONLY		BARRIER & MOUNTING ENDS	BARRIER ENDS ONLY
Poles	A Mount Ctrs.	C Length	B Pole Ctrs.	C Length
02	1.31	1.73	0.43	0.98
03	1.75	2.17	0.87	1.43
04	2.18	2.61	1.31	1.87
05	2.62	3.05	1.75	2.31
06	3.06	3.48	2.18	2.75
07	3.50	3.92	2.62	3.18
08	3.93	4.36	3.06	3.62
09	4.37	4.80	3.50	4.06
10	4.81	5.23	3.93	4.50
11	5.25	5.67	4.37	4.93
12	5.68	6.11	4.81	5.37
13	6.12	6.55	5.25	5.81
14	6.56	6.98	5.68	6.25
15	7.00	7.42	6.12	6.68
16	7.43	7.86	6.56	7.12
17	7.87	8.30	7.00	7.56
18	8.31	8.73	7.43	8.00
19	8.75	9.17	7.87	8.43
20	9.18	9.60	8.31	8.87
21	9.62	10.05	8.50	9.31
22	10.06	10.48	9.18	9.75
23	10.50	10.92	9.62	10.18
24	10.93	11.36	10.06	10.62
25	11.37	11.80	10.50	11.06
26	11.81	12.23	10.93	11.50
27	–	–	11.37	11.93
28	–	–	11.81	12.37

Dimensions in inches. To convert to millimeters, multiply by 25.4.

Dimesions - in (mm)

A3000 & LP3000 Series

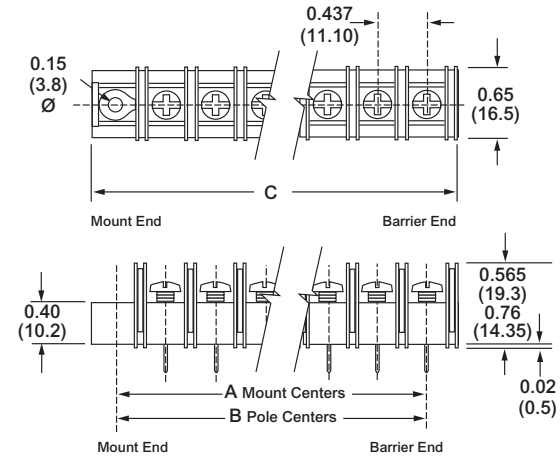

CB3000 Series

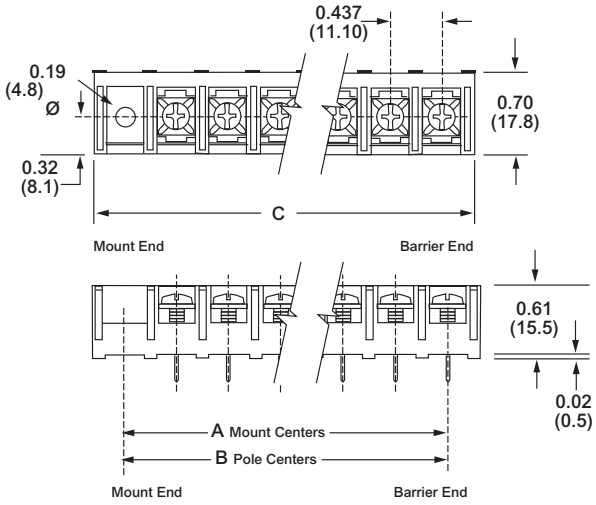

Series A3000 & LP3000

Single Row Terminal Blocks

Part Numbering System

Series	Terminal Style	Base/End (Views pg. 15)	Poles	Screw Options	Options
A3 / LP3	☐☐	☐	☐☐	☐☐☐☐	☐☐☐
A3 - standard barrier **LP3** - low profile barrier	**01** - handwired **02** - printed circuit **03** - non feed-thru **04** - wire wrap tail **05** - extended handwired **06** - handwired **07** - extended pin **08** - printed circuit **09** - 0.250 QC short **10** - 0.187 QC **14** - printed circuit **19** - 0.250 QC long	**1** - flat base/mnt. end **2** - flat base/barrier end **3** - insulator base/ mnt. end **4** - insulator base/ barrier end *5 - closed base/ mount end	**02** to **28** **02** to **26** on mount end base	Blank - std. screw **00** - screws shipped bulk **03** - stainless steel **04** - brass nickel-plated **07** - steel SEMS zinc-plated (not available with hardware options) **09** - brass SEMS nickel-plated (not available with hardware options) **07WR** - steel SEMS wire ready (A3 only) **CA** - captive screw	**AB** - angle mnt. options (pg 15) **A1** to **A9** - 0.250" QC **B1** to **B9** - 0.187" QC **DR** - drilled right angle (pg 15) †**J201** - flat slip-on jumper **L1** to **L6** marking options (pg 22) **MP, MP8** & **MT** mounting plates (pg 15) †**OJ3, OJ5** & **OJ7** - over barrier jumpers **RC** - retaining clips (pg 15) **R30** to **R77** - right angle bends (pg 15) **SO** - stand off insulators (pg 15) **S1** - solder lug/flat

*Base/End Note: 5 Style only available with 03 terminals.

ready (A3 only)

†Contact factory for configuration.

Terminal Styles

Inches (Millimeters)

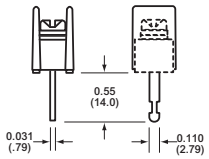

01
Handwired

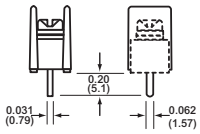

02
Printed Circuit

03
Non Feed-Thru

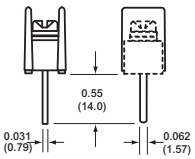

04
Wire Wrap Tail

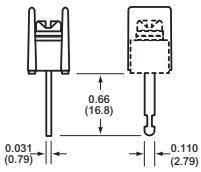

05
Extended Handwired

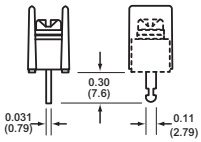

06
Handwired

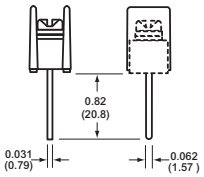

07
Extended Pin

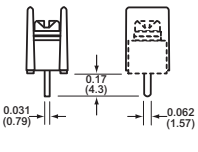

08
Printed Circuit

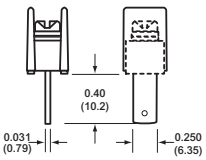

09
0.250″ QC Short

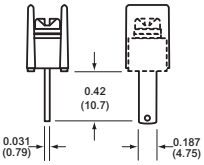

10
0.187″ QC

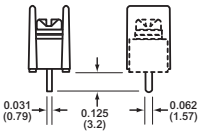

14
Printed Circuit

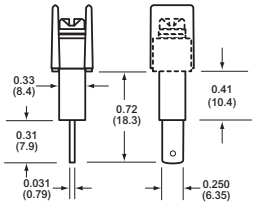

19
0.250″ QC Long

Screw Options

Standard
Zinc-Plated Steel

03
Stainless Steel

04
Brass
Nickel-Plated

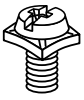

07
Steel SEMS
Zinc-Plated
(F523-J)

09
Brass SEMS
Nickel-Plated

07WR
Wire Ready
(A3 only)

Series A3000 & LP3000

Single Row Terminal Blocks *Continued*

Hardware Options (Bulk ordering part numbers are in parentheses.)

Inches (Millimeters)

Solder Lugs

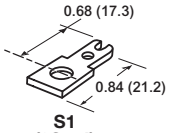

S1
(2S1-J)

†J201
Flat slip-on
(J201-J)

Jumpers

†OJ3
(OJ3-J)

†OJ7
LP3 Only
(OJ7-J)

†OJ5
(OJ5-J)

Quick Connects
Blade Width A = 0.250” Blade Width B = 0.187”

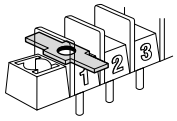

A1 & **B1**
(2A1-J & **2B1-J)**

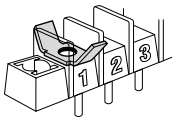

A2 & **B2**
(2A2-J & **2B2-J)**

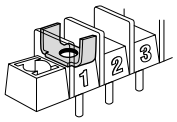

A3 & **B3**
(2A3-J & **2B3-J)**

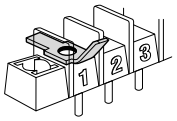

A4 & **B4**
(2A4-J & **2B4-J)**

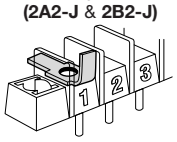

A5 & **B5**
(2A5-J & **2B5-J)**

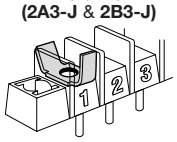

A6 & **B6**
(2A6-J & **2B6-J)**

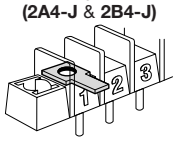

A7 & **B7**
(2A7-J & **2B7-J)**

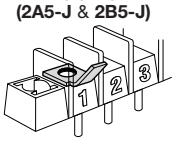

A8 & **B8**
(2A8-J & **2B8-J)**

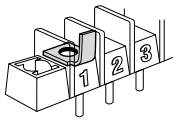

A9 & **B9**
(2A9-J & **2B9-J)**

†Contact factory for pole configuration.

Base/End Options

Inches (Millimeters)

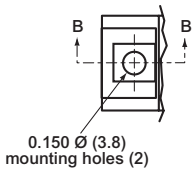

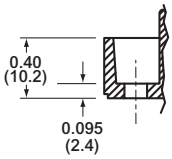

SECTION B–B

1, 3 & 5 Mount End

Series A3000 & LP3000

Single Row Terminal Blocks *Continued*

Mounting Options

Inches (Millimeters)

Right Angle Bends (A3, LP3 only)

Right angle terminals are offered on the A3000 & LP3000 Series. Configurations are defined in these dimensions: X = pin extension beyond the block base; Z = length from block base to centerline of the terminal tip. Standard bends consist of the X and Z dimensions shown in the chart. Specify by adding the selected Bend Option Code to the terminal part number.

04 Terminal Bend Configurations

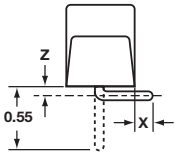

Bend Option Code	X (minimum)	Z	Available w/insulator base
R30	0.04	0.28	No
R35	0.01	0.23	No
R36	0.02	0.22	No
R39	0.05	0.19	No
R42	0.08	0.16	No
R46	0.12	0.12	No
R48	0.14	0.10	No
R50	0.16	0.08	No

07 Terminal Bend Configurations

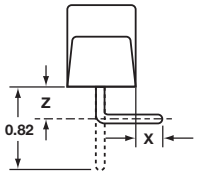

Bend Option Code	X (minimum)	Z	Available w/insulator base
R30	0.04	0.55	Yes
R35	0.01	0.50	Yes
R36	0.02	0.49	Yes
R50	0.16	0.35	No
R53	0.19	0.32	No
R66	0.32	0.19	No
R69	0.35	0.16	No
R75	0.41	0.10	No
R77	0.43	0.08	No

Dimensions in inches. To convert to millimeters, multiply by 25.4.

Angle Brackets (A3, LP3 only)

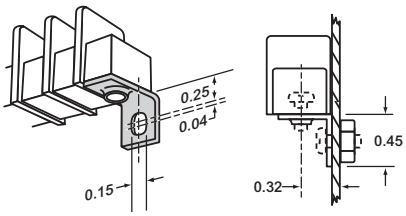

Option AB
Angle brackets enable block to be fastened at right angles to normal mount position. Bulk part number **2AB-J**.

Drilled Right Angle (A3, LP3 only)

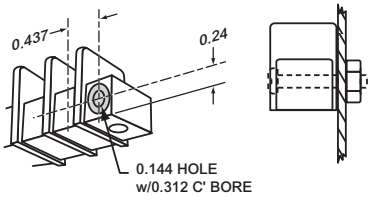

Option DR
Counterbored holes across mount ends of block enable fastening with two screws at right angles to normal mount position.

Mounting Plates

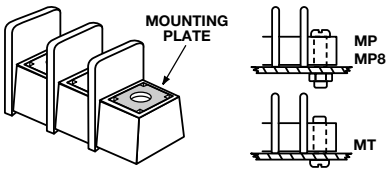

Options MP, MP8 & MT
MP Metal inserts with 0.150" dia. hole accept #6 screw. **MP8** Metal inserts with 0.187" dia. hole accept #8-32 screw. **MT** Metal inserts with tapped hole accept #6-32 screw.

Standoffs

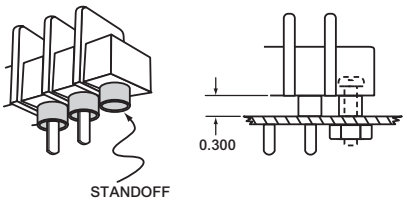

Option SO
Standoff mounts are tubes molded to the mounting positions. Available with insulator bases only.

Retaining Clip

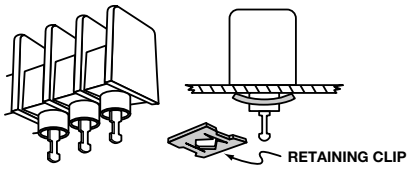

Option RC
Use on standoff tubes. Fit panels up to 0.125" thick. Two clips for every five positions. Supplied unassembled. Bulk part number **H541-J**.

Series CB3000

Single Row Terminal Blocks

Part Numbering System

Series	Terminal Style	Base/End	Poles	Screws	Options
CB3	☐☐	☐	☐☐	☐☐☐☐	☐☐☐
CB3 - closed back	**01** - handwired #6-32 screw **02** - printed circuit #6-32 screw **03** - non feed-thru #6-32 screw **07** - extended pin #6-32 screw **14** - printed circuit #6-32 screw **51** - handwired #8-32* **52** - printed circuit #8-32* **53** - non feed-thru #8-32* **57** - extended pin #8-32* **64** - printed circuit #8-32* *Note: #8-32 screw is a special with #6-32 head.	**1** - mount end **2** - barrier end **5** - closed base/ mount end Base/End Note: 5 Style only available with 03 terminals.	**02** to **28** **02** to **26** on mount end base	**07** - steel SEMS (standard) **09** - brass SEMS nickel-plated **CA** - SEMS captive	**AB** - angle mounting brackets (pg 17) **A7** to **A9** - 0.250" QC **B7** to **B9** - 0.187" QC **EB** - exit back terminals **L1** to **L6** marking options (pg 22) **LT1** to **LT6** marking options (pg 22) †**OJ3** & **OJ7** - over barrier jumpers **MP, MP8, MT** & **MT8** mtg. plates (pg 17) **S1** - solder lug/flat **Covers** - (pg 23) †Contact factory for configuration.

Terminal Styles

Inches (Millimeters)

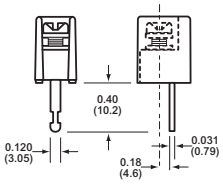

01
Handwired #6-32 screw
51
#8-32 screw

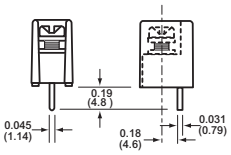

02
Printed Circuit #6-32 screw
52
#8-32 screw

03
Non Feed-Thru #6-32 screw
53
#8-32 screw
Available on Mount End (5) only.

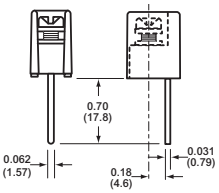

07
Extended Pin #6-32 screw
57
#8-32 screw

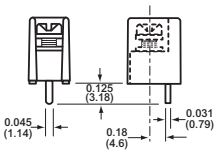

14
Printed Circuit #6-32 screw
64
#8-32 screw

Screw Options

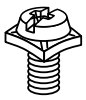

07
Steel SEMS
Zinc-Plated
(standard)

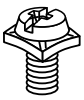

09
Brass SEMS
Nickel-Plated

**** NOTE: Wire ready screws standard on all terminal styles.***

CB3 Terminal Exit Options

Inches (Millimeters)

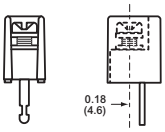

Exit Rear (std.)

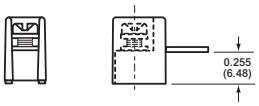

EB
Exit Back

Series CB3000

Single Row Terminal Blocks *Continued*

Hardware Options (Bulk ordering part numbers are in parentheses.)

Inches (Millimeters)

Solder Lugs

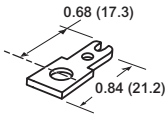

S1
(2S1-J)

Jumpers

†J201
Flat slip-on
(J201-J)

†OJ3
(OJ3-J)

†OJ7
(OJ7-J)

Quick Connects
Blade Width A = 0.250". Blade Width B = 0.187".

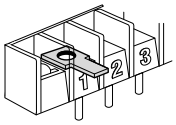

A7 & **B7**
(2A7-J & **2B7-J)**

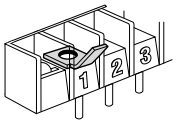

A8 & **B8**
(2A8-J & **2B8-J)**

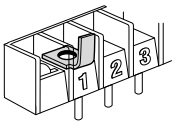

A9 & **B9**
(2A9-J & **2B9-J)**

†Contact factory for pole configuration.

Mounting Options

Inches (Millimeters)

Right Angle Mounting Bracket

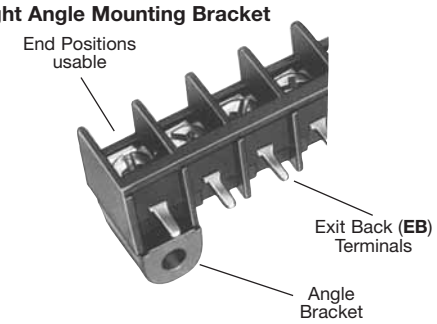

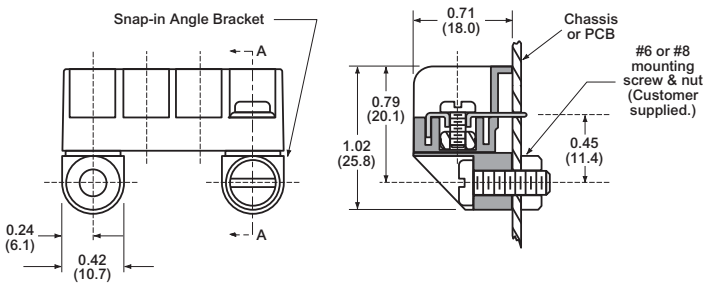

Option AB

Mounts blocks on PC boards at a right angle.
- Protects solder joints.
- Recommended for all EB (Exit Back) PCB terminal blocks.
- Bracket snaps securely on block (no hardware required).
- Minimum strip length (end positions are usable).
- Mount with #6-32 or #8-32 screws (not supplied).

Mounting Plates

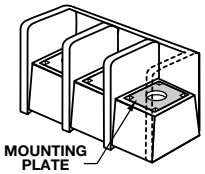

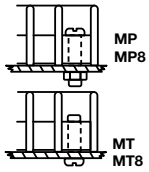

Options MP, MP8, MT & MT8
MP Metal inserts with 0.150" dia. hole accept #6 screw.
MP8 Metal inserts with 0.187" dia. hole accept #8-32 screw.
MT Metal inserts with tapped hole accept #6-32 screw.
MT8 Metal inserts with tapped hole accept #8-32 screw.

Series A38 / B38

Single Row Terminal Blocks

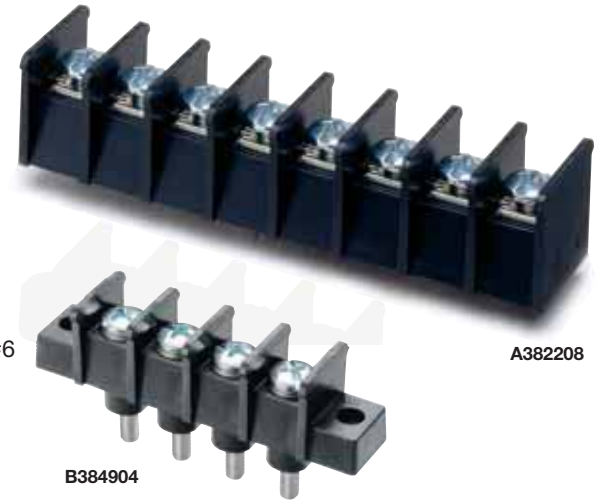

SPECIFICATIONS

Rating: A38: 30A, 600V
B38: 50A, 300V
Center Spacing: 0.437" (11.10mm)
Wire Range: A38: #10-22 AWG CU; B38: #8-16 AWG
Screw Size: #8-32 zinc-plated steel
Torque Rating: A38: 9 lb-in; B38: 15 lb-in for #8, 9 lb-in for #6
Base: A38 Only: Standoffs standard for easy flux washing
Distance Between Barriers: 0.378" (9.60mm)
Recommended PCB Hole Diameter (A38): 0.076" (1.93mm)
Operating Temperature: 221°F (105°C)
Molded Material: Black, UL Rated 94V0 Thermoplastic
Breakdown Voltage: 5000V
Agency Information: UL File E62622, CSA File 47235; CE Certified

TABLE A

Poles	MOUNTING ENDS ONLY B Mount Ctrs.	MOUNTING ENDS ONLY "A" Dim. Length	BARRIER ENDS ONLY "A" Dim. Length
02	1.31	1.67	0.93
03	1.75	2.10	1.37
04	2.19	2.54	1.81
05	2.62	2.98	2.25
06	3.06	3.41	2.68
07	3.50	3.85	3.12
08	3.93	4.29	3.56
09	4.37	4.72	3.99
10	4.81	5.16	4.43
11	5.24	5.60	4.87
12	5.68	6.04	5.30
13	6.12	6.47	5.74
14	6.56	6.91	6.18
15	6.99	7.35	6.61
16	7.43	7.78	7.05

* Dimensions in inches. To convert to millimeters, multiply by 25.4.

Dimensions - in (mm)

Series A38

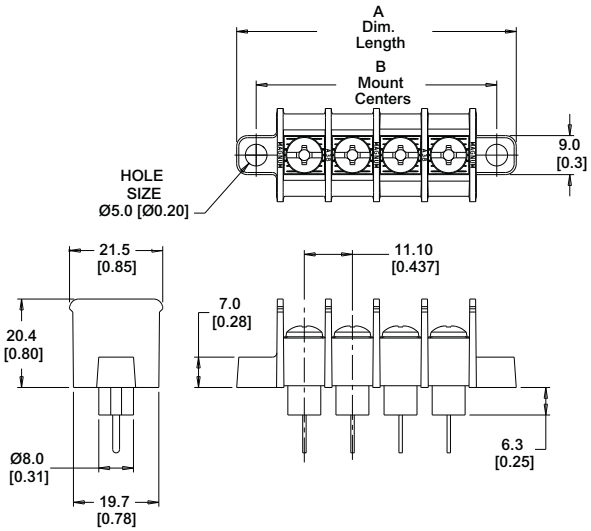

Series B38

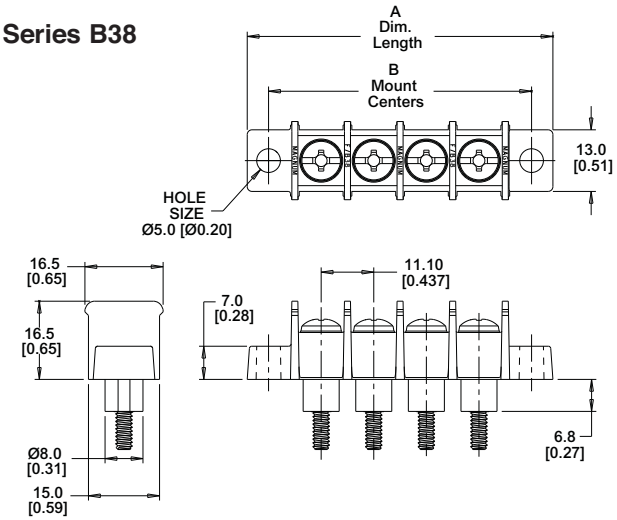

COOPER Bussmann

Part Numbering System

Series	Terminal Style	Base/End	# of Poles	Screw Options	Options
A38					
	0 - 0.187″ QC **1** - hand wired **2** - printed circuit **7** - extended wire wrap **9** - 0.250" QC	**1** - flat base, mount end **2** - flat base, barrier end **3** - insulator base* mount end **4** - insulator base* barrier end *N/A on 2 terminal style.	**02** to **16**	Blank - standard screw (steel zinc-plated, philslot BHMS) **04** - brass, nickel-plated, philslot BHMS **07** - steel, SEMS zinc-plated philslot screw **92** - steel, zinc-plated slotted BHMS **94** - brass, nickel-plated slotted BHMS (Binding Hard Machine Screw)	**L1** to **L6** marking options (pg 22) **RC** - retaining clips (pg 15) **Covers** - (pg 23)
B38					
	1 - long turret **2** - short turret **3** - screw terminal #6-32 screw top & bottom) **4** - stud (#8-32 screw top, #6-32 stud bottom) †**5** - double stud (#6-32 stud top & bottom) †C360 Copper alloy (bright tin plate)	**0** - flat base, mount ends **4** - insulator base, barrier ends **9** - insulator base mount ends	**02** to **16**	**Blank** - standard screw steel zinc-plated philslot BHMS) **04** - brass, nickel-plated, philslot BHMS #8-32 *__34__ - #6-32 nickel-plated brass philslot BHMS *Note: 34 screws only *available with 3 terminal style.	**L1** to **L6** marking options (pg 23) **RC** - retaining clips (pg 16)

A38 Terminal Styles

Wire ready screws standard

Inches (Millimeters)

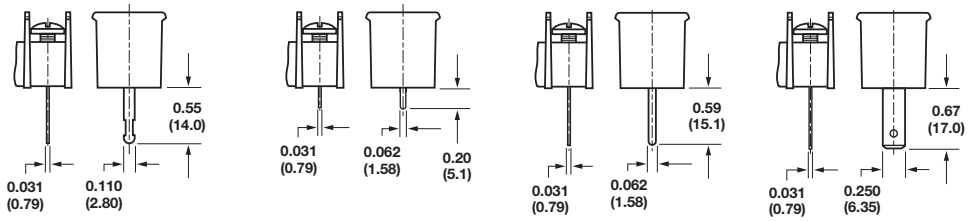

1 Handwired | **2** Printed Circuit | **7** Extended Pin | **9** 0.250" QC

B38 Terminal Styles

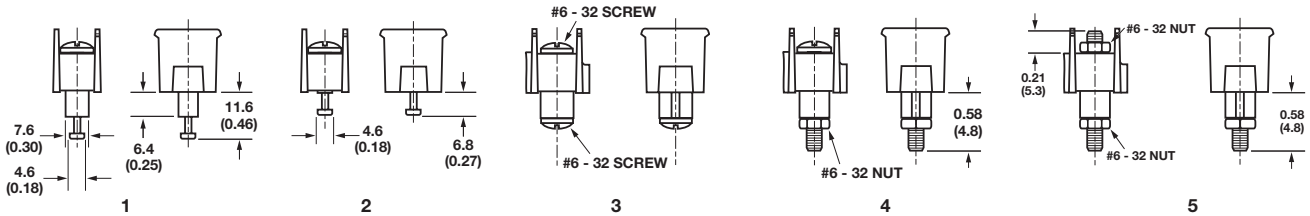

1 Long Turret | **2** Short Turret | **3** Screw Terminal | **4** Stud | **5** Double Stud

Screw Options

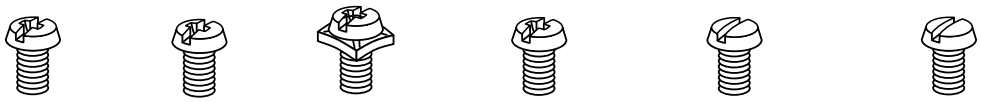

Standard Zinc-Plated Steel | **04** Brass Nickel-Plated | **07** Steel SEMS Zinc-Plated | **34** Nickel-Plated Brass Philslot BHMS | **92** Slotted, Zinc-Plated Steel | **94** Slotted, Nickel-Plated Brass

Series A4000 & Series B4000

Single Row Terminal Blocks

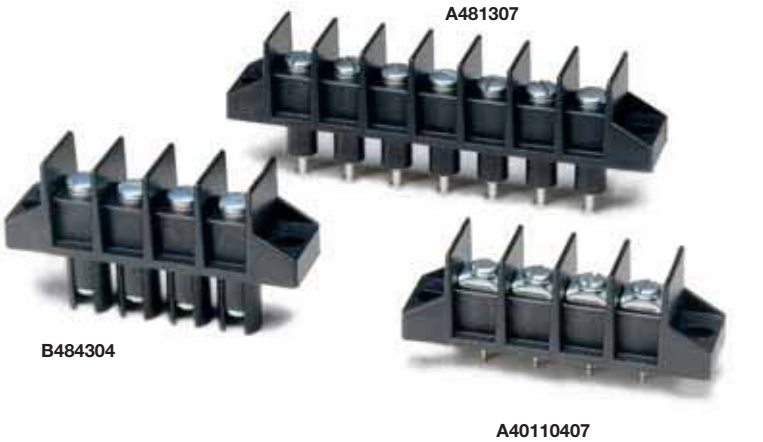

SPECIFICATIONS

Rating: See table.
Center Spacing: 0.562” or 9/16” (14.28mm)
Wire Range: See rating table.
Screw Size: #8-32 or #10-32 zinc-plated slotted screws
Torque Rating: #8 screw size 16 lb-in.; #10 screw size 20 lb-in.
Distance Between Barriers: 0.47” (11.9mm)
Operating Temperature: 105°C (221°F) max., -40°C (-40°F) min.
Molded Material: Black, UL Rated 94V0 Thermoplastic
Hardware: Bottom studs supplied with nuts assembled. Cup washers are optional on bottom studs but are not recommended with ring terminals.
Extended Hex Nuts: Optional extended, slotted hex nuts enable easier installation and removal with hex wrench or screwdriver. Available in bulk for the #10-32 studs on Series A4953 blocks. Specify part number F582 and quantity.
Breakdown Voltage: 6100V
Agency Information: UL File E62622, CSA File 47235; CE Certified

RATING TABLE

Part Number	Terminal Top	Terminal Bottom	Wire* Range CU	Ratings* Volts/Amps
A4003XX	# 8 Screw	#8 Stud	8-16 AWG	150V/50A
A4011XX	# 8 Screw	Solder	10-16 AWG	600V/35A
A4013XX	# 8 Screw	Solder	10-16 AWG	600V/35A
A4021XX	# 8 Screw	0.250 QC	10-16 AWG	600V/35A
A4035XX	# 8 Screw	Closed	8-16 AWG	600V/50A
A4041XX	#10 Screw	Solder	10-16 AWG	600V/35A
A4043XX	#10 Screw	Solder	10-16 AWG	600V/35A
A4051XX	#10 Screw	0.250 QC	10-16 AWG	600V/35A
A4803XX	#10 Screw	#8 Stud	8-16 AWG	150V/50A
A4813XX	#10 Screw	SolderTurret	10-16 AWG	600V/35A
A4843XX	#10 Screw	#8 Screw	8-16 AWG	150V/50A
A4953XX	#10 Stud	#10 Stud	8-16 AWG	150V/50A
B4843XX	#10 Screw	#8 Screw	8-16 AWG	600V/50A

* All models 30A Max. with 10 AWG;
35-50A ratings with 8 AWG using ring or fork type terminals.
Note: 50A rating achieved with #8 copper wire crimped to ring terminal.

Poles	A (in.) Mount Centers	B (in.) Length
2	1.69	2.12
3	2.25	2.68
4	2.81	3.24
5	3.37	3.80
6	3.93	4.36
7	4.50	4.93
8	5.06	5.34
9	5.62	6.05
10	6.18	6.61
11	6.74	7.17
12	7.31	7.74
13	7.87	8.30
14	8.43	8.86
15	8.99	9.44
16	9.55	9.98
17	10.12	10.55
18	10.68	11.11

* Dimensions in inches. To convert to millimeters, multiply by 25.4.

A4000 Series Dimensions - in (mm)

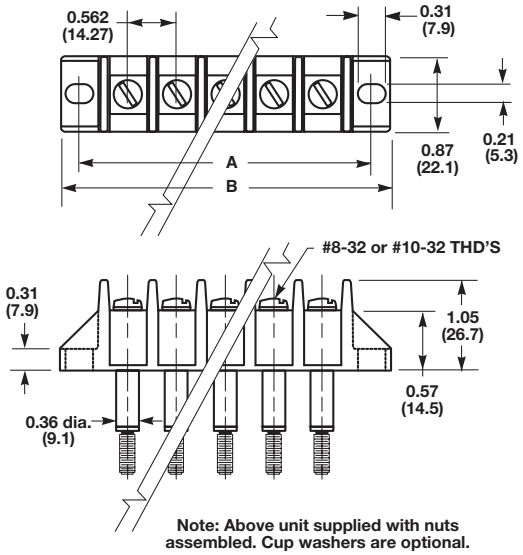

Note: Above unit supplied with nuts assembled. Cup washers are optional.

Optional Cup Washers Assembled

Available on A4003, A4803, A4843, A4953 & B4843.

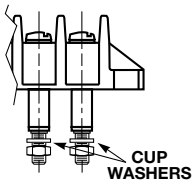

Reference Panel Cutout for 6 Position Block

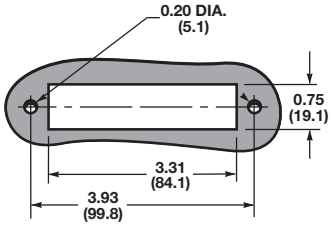

COOPER Bussmann

Part Numbering System

Series

A 4

B 4

A4 - standard
B4 - barrier (only available in 84 terminal style)

Terminal Style

00 - screw top; stud bottom
01 - screw top; solder bottom
02 - #8 screw top; 0.250″ QC bottom
03 - screw top only
04 - #10 screw top; solder term. b.
05 - #10 screw top; 0.250″ QC bottom
80 - screw top; stud bottom #10-32 top, #8-32 bottom insulated base
81 - screw top; solder turret bottom #10-32
84 - screw top; screw bottom #10-32
95 - stud top; stud bottom #10-32

Base/End

***1** - flat base/ mount end
3 - insulator base- (not available in 03 terminal style) /mount end
5 - closed base/ mount end (available in 03 terminal only)

*Available in 01, 02, 04 & 05 terminal style only.

Poles

02 to **18**

Screw Options

Blank - std. screw
00 - screws shipped bulk
04 - brass nickel-plated
07 - steel SEMS zinc plated (not available with hardware options; not available on A4003, A4803, A4813, A4843, B4843)

Options

A1 to **A9** - 0.250" QC
†**CW** - cup washer (pg 20)
J301 - flat slip-on jumper (2 position only)
L1 to **L6** marking options (pg 22)
S1 & S2 - solder lugs/flat

† Available only on A4003, A4803, A4843, A4953 & B4843.

Terminal Styles

Inches (Millimeters)

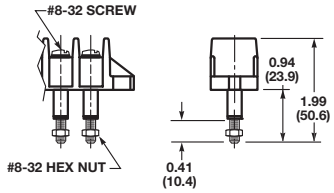

A4003XX

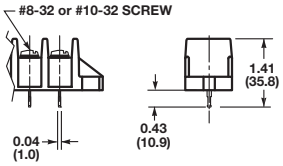

A4011XX (#8-32)
A4041XX (#10-32)

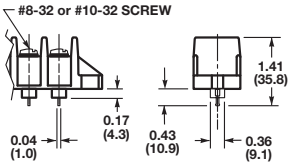

A4013XX (#8-32)
A4043XX (#10-32)

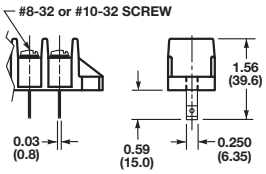

A4021XX (#8-32)
A4051XX (#10-32)

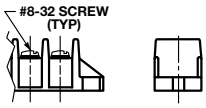

A4035XX

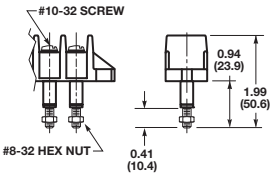

A4803XX

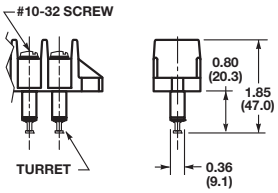

A4813XX

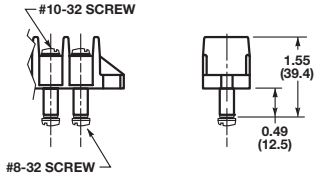

A4843XX

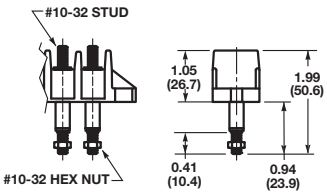

A4953XX

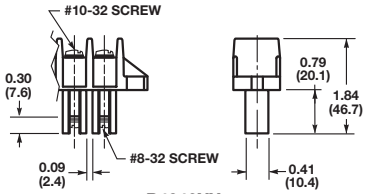

B4843XX

Hardware Options (Bulk ordering part numbers are in parentheses.)

Inches (Millimeters)

Solder Lugs

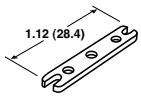

***S1**
(2S1-J)

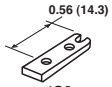

***S2**
(2S2-J)

Jumpers

J301
(J301-J)

Quick Connects Blade Width A = 0.250". *(For other orientations, contact factory.)*

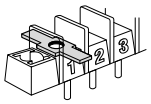

A1
(4A1-J)

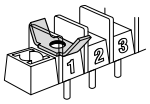

A2
(4A2-J)

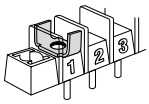

A3
(4A3-J)

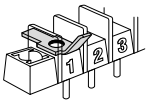

A4
(4A4-J)

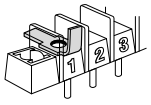

A5
(4A5-J)

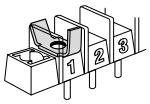

A6
(4A6-J)

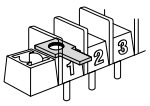

A7
(4A7-J)

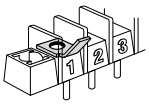

A8
(4A8-J)

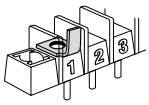

A9
(4A9-J)

*Not available for A4843

All Series Marking Options

Single Row Terminal Blocks

Marking Options & Accessories

Standard Marking

Markings are applied directly to the sides of Series 1000, 2000, 3000, and 4000. Standard characters are white and 1/8" high. Factory may substitute 3/32" high characters.

Blocks to be marked on both sides require a different code for each side. Example: "L1" on one side of the block requires "L2" on the other side to ensure common terminal marking. Specify by adding suffix to part number.

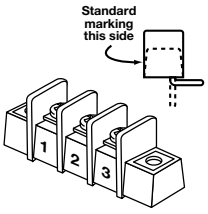

L1
Upright Numerals
Left to Right

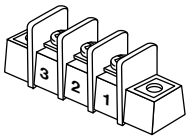

L2
Upright Numerals
Right to Left

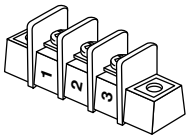

L3
Left Lying Numerals
Left to Right

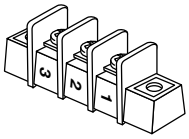

L4
Right Lying Numerals
Right to Left

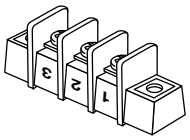

L5
Upside-Down Numerals
Right to Left

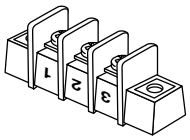

L6
Upside-Down Numerals
Left to Right

Special Marking

Special markings are available for Series 1000, 2000, 3000, 4000 & 5000 at an additional charge for preparation. Production charges for setup, handling and marking are the same as for standard marking and the same quantity discounts apply. Consult factory for price and delivery.

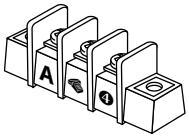

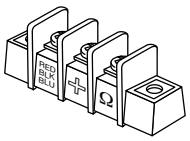

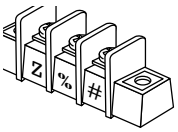

Closed Barrier Terminal Block Marking Options

L1 & LT1 = Upright numerals, numbered from left to right
L2 & LT2 = Upright numerals, numbered from right to left
L3 = Left lying numerals, numbered from left to right
L4 = Right lying numerals, numbered from right to left
L5 & LT5 = Upside down numerals, numbered from right to left
L6 & LT6 = Upside down numerals, numbered from left to right

Options LT1 - LT6
Top Marking
For high visibility in tight packages.

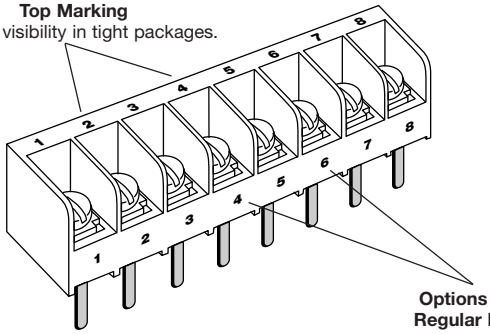

Options L1 - L6
Regular Marking

Marker Strips

Black marker strips with white numerals mount beneath the terminal blocks to clearly identify terminal and wire positions. Available with forward or reverse markings, top or bottom of strip. If special markings are required, submit a drawing.

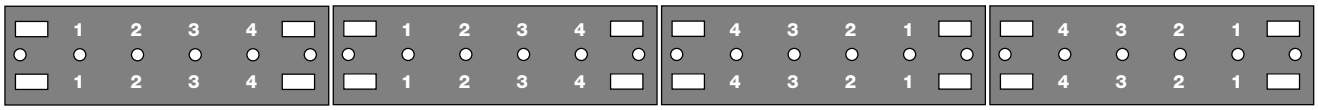

Bottom Forward - **BF** | Top Forward - **TF** | Bottom Reverse - **BR** | Top Reverse - **TR**

Series

M S

MS1 - 1000 Series
MS2 - 2000 Series
MS3 - 3000 Series

Base

1 - mount end, feed thru
2 - barrier end, feed thru
3 - mount end, insulator tubes
4 - barrier end, insulator tubes
5 - mount end, non feed-thru

Poles

02 to **36**

Marking

BF - bottom forward
TF - top forward
BR - bottom reverse
TR - top reverse

All Series Accessories

Single Row Terminal Blocks *Continued*

Cover Options - Single Row

Terminal Block Covers

Available for Series A1000, A2000, A3000, A4000, CB2000, CB3000, LP2000, & LP3000.
Three styles of UL 94V0 thermoplastic covers are offered in black. Covers are ordered separately and supplied with two clips each, unless ordered without clips. Optional markings may be specified (black on yellow; white on black).

Notes: Covers can not be used with:
- mounting plate options MP & MT.
- certain quick connect terminals.
- 0, 6, & 9 base/end styles on A2 or A3

Bulk Cover Clips: Series 1000 = **CC1-J**; Series 2000 & 3000 = **CC2-J;** Series 4000 = **CC4-J**.

Standard Cover Markings

Top Forward - **TF**

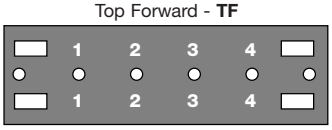

Bottom Forward - **BF**
Skirted Access Side

Top Reverse - **TR**

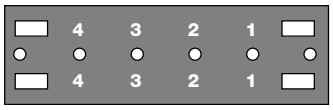

Bottom Reverse - **BR**
Skirted Access Side

Cover Options
BB & **CB**
Skirted access
on both sides.

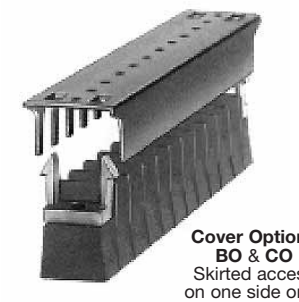

Cover Options
BO & **CO**
Skirted access
on one side only.

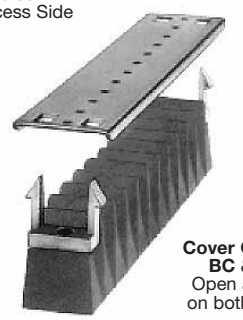

Cover Options
BC & **TC**
Open access
on both sides.

Cover	Series	Poles	Markings	Options
☐☐	☐	☐☐	☐☐	☐☐
BB - skirted access, both sides, black	**1** - 1000	**02** to **36**	**BF** - bottom forward	**00** - without clips
BO - skirted access, one side, black	**2** - 2000		**TF** - top forward	
BC - open access, both sides, black*	**3** - 3000		**BR** - bottom reverse	
* Not available in 4000 Series	**4** - 4000		**TR** - top reverse	

Snap-On Covers for A38/B38/F38 Series & CB2/CB3 Series

A38/B38 Series

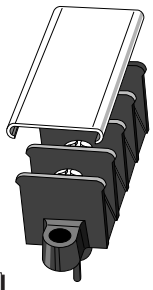

Poles

TA8	-	☐☐	**A38 Series**
TB8	-	☐☐	**B38 Series**
FB8	-	☐☐	**F38 Series**

CB2/CB3 Series

Poles

T02	-	☐☐	**CB2 Series**
T03	-	☐☐	**CB3 Series**

Terminal Blocks: Single & Double Row
EuroMag Series
Terminal Blocks: Base & Rail Mount
Power Distribution Blocks
Wire Management Products
Edge Connectors, One-Sided Boards
Compliance References

F38 Series Filtered Terminal Blocks

SPECIFICATIONS

Ratings: 35A, 240Vac, 300Vdc.
Center Spacing: 0.437" or 7/16" (11.10mm)
Wire Size: # 10-22 AWG CU
Screw Size: # 8-32 (# 6-32 available, consult factory)
Torque Rating: 15 lb-in.
Operating Temperature: –55°C to +105°C.
Housing Material: 94V0 thermoplastic.
Molded Material: Black, UL rated 94V0 thermoplastic.
Terminal Material: Brass, tin-plated
Capacitance: 1000 pF to 5000 pF in either C or Pi Schematic
Dielectric Withstanding Voltage: 1000 Vac; 1700Vdc
DC Resistance: 0.01 ohms max.
Agency Information: UL File E62622, CE Certified

# of Poles	A Front Mount	A Rear Mount	B	C	D
2	1.67	1.88	1.31	0.93	0.44
3	2.10	2.32	1.75	1.37	0.88
4	2.54	2.76	2.19	1.81	1.31
5	2.98	3.19	2.63	2.25	1.75
6	3.41	3.63	3.06	2.68	2.19
7	3.85	4.07	3.50	3.12	2.62
8	4.29	4.51	3.94	3.56	3.06

* Note: In inches. Available up to 16 poles. Consult factory.

FEATURES

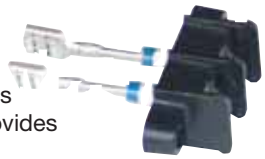

- Rugged integrated construction of filtering elements around a solid brass pin provides excellent EMI/RFI filtering
- Filter element provides high insertion loss for EMI/RFI filtering of AC and DC power and control lines
- 2 to 8 terminals standard – up to 16 poles available
- Cost-effective EMI solution for industrial interconnection filtering
- Termination options are straight lead, male or female quick connect
- Custom and special options available including:
  – Different capacitance values on each position
  – Wire assemblies added to pins

Insertion Loss for 2,500 pF Pi Schematic
Typical Insertion Loss (dB) in 50 Ohm Circuit

30MHz . . . . . .42 dB	300 MHz . . . . . .68 dB
50 MHz . . . . . .45 dB	1000 MHz . . . . . .70 dB
100 MHz . . . . . .50 dB	

* Note: For other capacitance insertion loss, consult factory.

Dimensions - mm (in)

O - Front Panel Mount

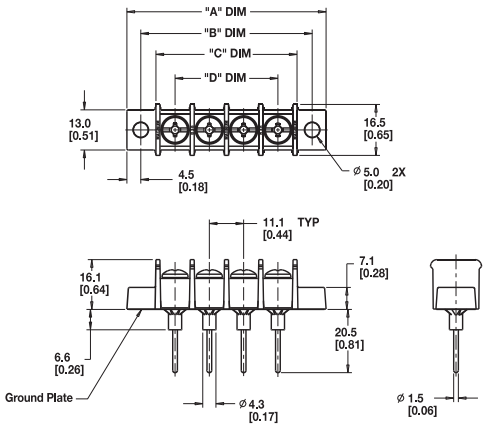

I - Rear Panel Mount

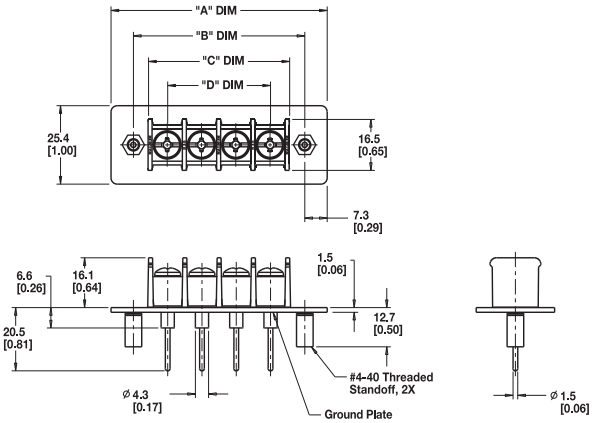

Part Numbering System

Inches (Millimeters)

Series	Terminal Style	Mounting	# of Poles	Screw Options	Filter Options	Capacitance
F38	**0** - straight lead **1** - 0.187" quick connect (male) **2** - 0.187" quick connect (male) **3** - 0.250" quick connect (male) **4** - 0.250" quick connect (female)	**0** - front panel mount with mount ends **1** - rear panel mount with #4-40 threaded inserts	**02** to **08***	**Blank** - #8-32, steel, zinc-plated philslot BHMS (stnadard) **04** - #8-32, brass, nickel-plated philslot BHMS **92** - #8-32, steel, zinc-plated slotted BHMS **94** - #8-32, brass, nickel-plated slotted BHMS	**C** - C Filter **P** - Pi Filter	**1.0** - 1000 pF + 100%-0% **2.5** - 2500 pF + 100%-0% **5.0** - 5000 pF + 100%-0%

* Note: Standard is 02-08 poles. Available up to 16 poles. Consult factory for availability.
Special electrical/mechanical configurations are available upon request from factory.

Series TB100

Double Row Terminal Blocks

SPECIFICATIONS

Rating: 30A, 300V*
Center Spacing: 0.375" or 3/8" (9.52mm)
Wire Range: #14 - 22 AWG CU
Screw Size: #6-32 philslot screws
Torque Rating: 9 lb-in.
Distance Between Barriers: 0.30" (7.62mm)
Mounting: #6 screws
Operating Temperature: 130°C (266°F) max., -40°C (-40°F) min.
Materials: Molded base: Black, UL rated 94V0 thermoplastic
Terminal plating: Tin over brass; Screws: Zinc-plated steel
Breakdown Voltage: 3600V
Agency Information: UL File E62622/CSA File 47235; IEC Compliance; CE Certified

* Max. rating shown; some options may be rated lower - consult factory.

Poles	A	B	Poles	A	B	Poles	A	B
02	1.40	1.12	14	5.90	5.62	26	10.40	10.12
03	1.78	1.50	15	6.28	6.00	27	10.78	10.50
04	2.16	1.88	16	6.66	6.38	28	11.16	10.88
05	2.53	2.25	17	7.03	6.75	29	11.53	11.25
06	2.90	2.62	18	7.40	7.12	30	11.90	11.62
07	3.28	3.00	19	7.78	7.50	31	12.28	12.00
08	3.66	3.38	20	8.16	7.88	32	12.66	12.38
09	4.03	3.75	21	8.53	8.25	33	13.03	12.75
10	4.40	4.12	22	8.90	8.62	34	13.40	13.12
11	4.78	4.50	23	9.28	9.00	35	13.78	13.50
12	5.16	4.88	24	9.66	9.38	36	14.16	13.88
13	5.53	5.25	25	10.03	9.75			

* Dimensions in inches. To convert to millimeters, multiply by 25.4.

Dimensions - in (mm)

TB100

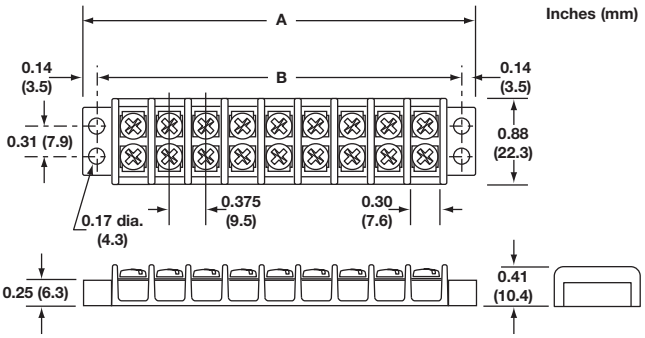

Part Numbering System

Series

T B 1 0 0 –

Poles

□□

02 to **36**

Screw Options

□□

Blank - steel philslot, zinc-plated
00 - screws shipped bulk
B - brass philslot, nickel-plated
BS - brass Sems philslot, nickel-plated
SP - steel Sems philslot, zinc-plated
P - steel Sems (P-style)
ST - stainless steel, philslot
STR - stainless steel, phillips (recess)

Marking

□□

L1 to **L6** - (pg 32)
Marker strips (pg 33)
Covers (pg 32)

Hardware Options

□□□□

QC1 to **QC20** - quick connects
†**J101** - flat slip-on jumper (2 position only)
†**0J2** - over barrier jumpers
†**0J4** - over barrier jumpers

† Contact factory for pole configuration.

Screw Options

B
Brass Philslot
Nickel-Plated

BS
Brass SEMS
Philslot Nickel-Plated

SP
Steel SEMS
Philslot Zinc-Plated

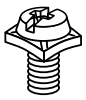

ST
Stainless Steel
Philslot

P
Steel SEMS
(P-Style)

STR
Stainless Steel
Phillips (recess)

Hardware Options (Bulk ordering part numbers are in parentheses.)

Quick Connects – Assembled Terminal 0.187" x 0.020". Max. current rating 13 Amps. For other orientations, contact factory.

QC1

QC2

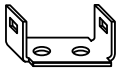

QC3

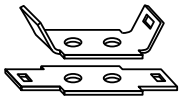

QC4

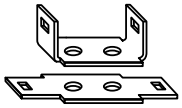

QC5

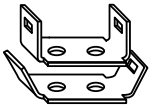

QC6

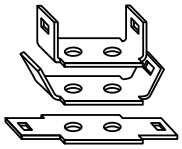

QC7

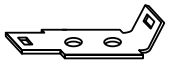

QC8

QC9

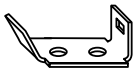

QC10

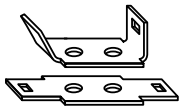

QC11

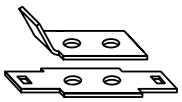

QC12

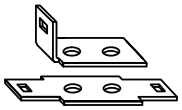

QC13

QC14

QC15

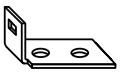

QC16

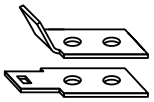

QC17

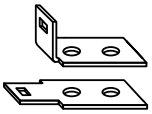

QC18

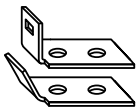

QC19

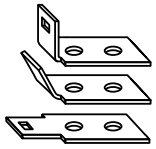

QC20

Quick Connects – Bulk Min. order per part no. – 100 pieces.

QC101
Flat – none

QC102
QC 45° – none

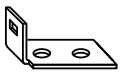

QC103
QC 90° – none

QC104
Flat – Flat

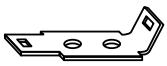

QC105
Flat – QC 45°

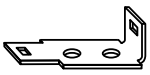

QC106
Flat – QC 90°

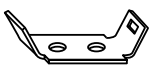

QC107
QC 45° – QC 45°

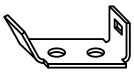

QC108
QC 45° – QC 90°

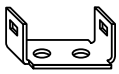

QC109
QC 90° – QC 90°

Jumpers – Bulk Min. order per part no. – 100 pieces. Contact factory for jumper assembly.

†J101
Flat slip-on
(J101-J)

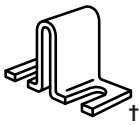

†OJ2
Slip-on over barrier
(0J2-J)

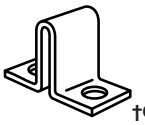

†OJ4
Closed over barrier
(0J4-J)

† Contact factory for pole configuration.

COOPER Bussmann

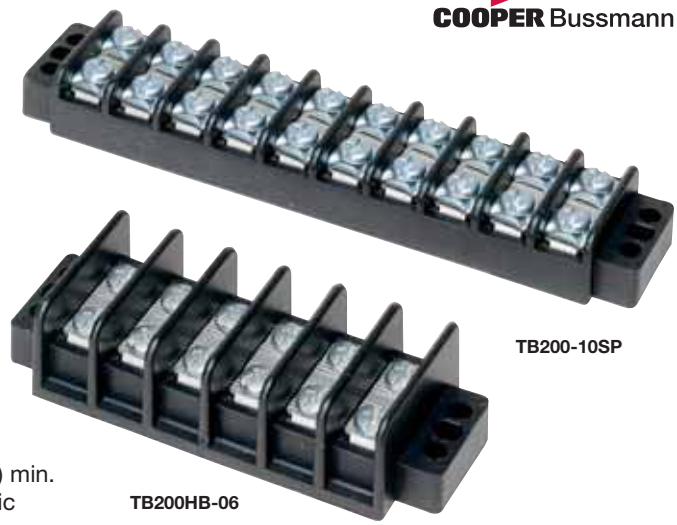

TB200-10SP

TB200HB-06

Series TB200 & TB200HB
Double Row Terminal Blocks

SPECIFICATIONS
Rating: TB200 - 30A, 300V*
TB200HB - 30A, 600V*
Center Spacing: 0.437" or 7/16" (11.10mm)
Wire Range: #12 - 22 AWG CU
Screw Size: #6-32 philslot screws
Torque Rating: 9 lb-in.
Distance Between Barriers: 0.353" (8.97mm)
Mounting: #6 screws
Operating Temperature: 130°C (266°F) max., -40°C (-40°F) min.
Materials: Molded base: Black, UL rated 94V0 thermoplastic
Terminal plating: Tin over brass; Screws: zinc-plated steel
Breakdown Voltage: 4800V
Agency Information: UL File E62622, CSA File 47235 & 15364; IEC Compliance; CE Certified

* Max. rating shown; some options may be rated lower - consult factory.

Poles	A	B	Poles	A	B	Poles	A	B
02	1.63	1.31	12	6.00	5.68	22	10.37	10.06
03	2.07	1.75	13	6.44	6.12	23	10.81	10.50
04	2.51	2.18	14	6.87	6.56	24	11.25	10.93
05	2.94	2.62	15	7.31	7.00	25	11.68	11.37
06	3.38	3.06	16	7.75	7.43	26	12.12	11.81
07	3.82	3.50	17	8.19	7.87	27	12.56	12.25
08	4.25	3.93	18	8.62	8.31	28	13.00	12.68
09	4.69	4.37	19	9.06	8.75	29	13.44	13.12
10	5.13	4.81	20	9.50	9.18	30	13.87	13.56
11	5.57	5.25	21	9.94	9.62			

* Dimensions in inches. To convert to millimeters, multiply by 25.4.

Dimensions - in (mm)

TB200

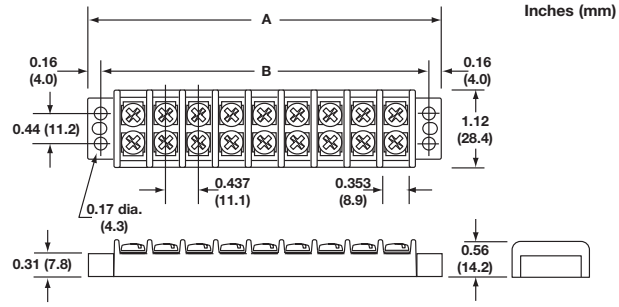

TB200HB

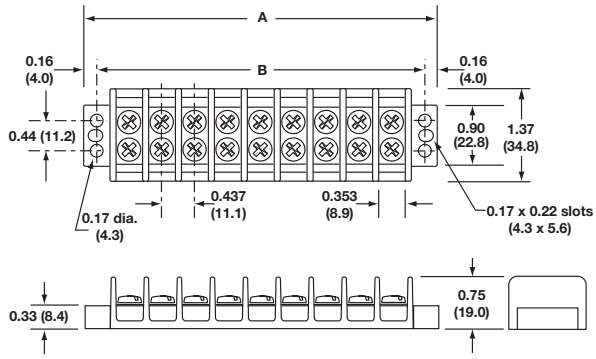

Part Numbering System

Series

TB200 -

200 - Standard
200HB - High barrier

Poles

02 to **30**

Screw Options

Blank - steel philslot, zinc-plated
00 - screws shipped bulk
B - brass philslot, nickel-plated
BS - brass Sems philslot, nickel-plated
SP - steel Sems philslot, zinc-plated
P - steel Sems (P-style)
ST - stainless steel, philslot
SS - stainless steel Sems, philslot
STR - stainless steel, phillips (recess)

Marking

L1 to **L6** - (pg 32)
Marker strips (pg 32)
Covers (pg 32)

Hardware Options

QC1 to **QC20** - quick connects
†**J201** - flat slip-on jumper (2 position only)
†**0J3** - over barrier jumpers
†**0J5** - over barrier jumpers
†**0J7** - over barrier jumpers

† Contact factory for pole configuration

Terminal Blocks: Single & Double Row
EuroMag Series
Terminal Blocks: Base & Rail Mount
Power Distribution Blocks
Wire Management Products
Edge Connectors, One-Sided Boards
Compliance References

Screw Options

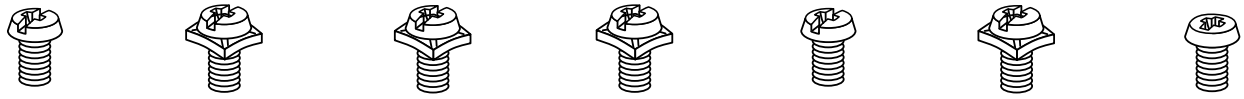

B
Brass Philslot
Nickel-Plated

BS
Brass SEMS
Philslot Nickel-Plated

SP
Steel SEMS
Philslot Zinc-Plated

P
Steel SEMS
(P-Style)

ST
Stainless Steel
Philslot

SS
Stainless Steel
SEMS Philslot

STR
Stainless Steel
Phillips (recess)

Hardware Options (Bulk ordering part numbers are in parentheses.)

Quick Connects – Assembled Terminal 0.250" x 0.031". Max. current rating 20 Amps. For other orientations, contact facto-

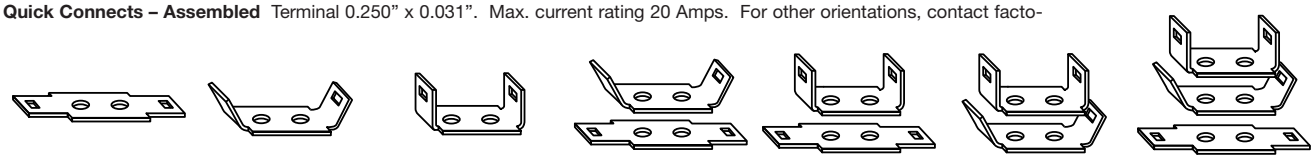

QC1 **QC2** **QC3** **QC4** **QC5** **QC6** **QC7**

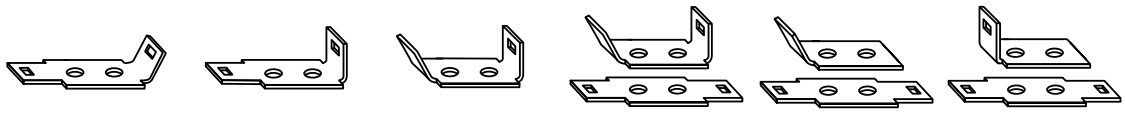

QC8 **QC9** **QC10** **QC11** **QC12** **QC13**

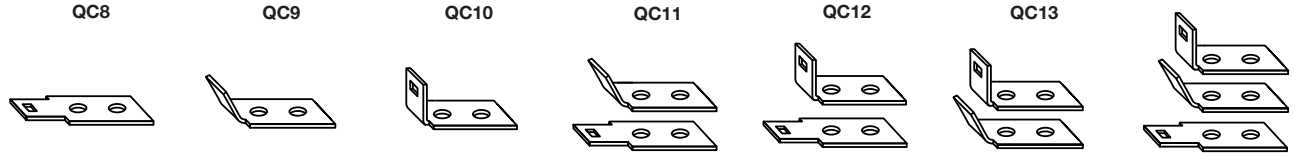

QC14 **QC15** **QC16** **QC17** **QC18** **QC19** **QC20**

Quick Connects – Bulk Min. order per part no. – 100 pieces.

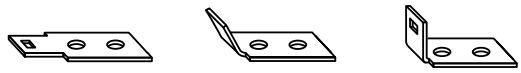

QC201
Flat – none

QC202
QC 45° – none

QC203
QC 90° – none

QC204
Flat – Flat

QC205
Flat – QC 45°

QC206
Flat – QC 90°

QC207
QC 45° – QC 45°

QC208
QC 45° – QC 90°

QC209
QC 90° – QC 90°

Jumpers – Bulk Min. order per part no. – 100 pieces. Contact factory for jumper assembly.

†J201
Flat slip-on
(not available on
TB200HB)
(J201-J)

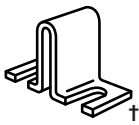

†OJ3
Slip-on over barrier
for TB200HB
(0J3-J)

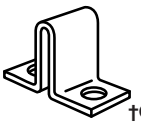

†OJ5
Closed over barrier
for TB200HB
(0J5-J)

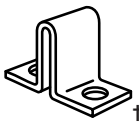

†OJ7
Closed over barrier
for TB200
(0J7-J)

† Contact factory for pole configuration.

COOPER Bussmann

Series TB300 & TB345

Double Row Terminal Blocks

TB300-08

TB345-06SP

SPECIFICATIONS

Rating: TB300 – 30A, 600V*
TB345 – 45A, 600V*
Center Spacing: 0.562" or 9/16" (14.28mm)
Wire Range: #8 - 22 AWG CU
Screw Size: TB300 – #8-32 philslot screws
TB345 – #10-32 philslot screws
Torque Rating: #8 screws - 16 lb-in.;
#10 screws - 20 lb-in.
Distance Between Barriers: 0.41" (10.5mm)
Mounting: TB300 – #8 screws; TB345 – #10 screws
Operating Temperature: 130°C (266°F) max., -40°C (-40°F) min.
Material: Molded base: Black, UL rated 94V0 thermoplastic
Terminal plating: Tin over brass; Screws: zinc-plated steel
Breakdown Voltage: 7500V
Agency Information: UL File E62622, CSA File 47235; IEC Compliance; CE Certified

* Max. rating shown; some options may be rated lower - consult factory.

Poles	A	B	Poles	A	B	Poles	A	B
02	2.13	1.69	10	6.62	6.19	18	11.12	10.68
03	2.69	2.25	11	7.18	6.75	19	11.68	11.25
04	3.25	2.81	12	7.75	7.31	20	12.24	11.81
05	3.81	3.37	13	8.31	7.87	21	12.80	12.37
06	4.37	3.94	14	8.87	8.44	22	13.37	12.93
07	4.94	4.50	15	9.43	9.00	23	13.93	13.50
08	5.50	5.06	16	9.99	9.56	24	14.49	14.06
09	6.06	5.62	17	10.56	10.12			

* Dimensions in inches. To convert to millimeters, multiply by 25.4.

Dimensions - in (mm)

TB300 & TB345

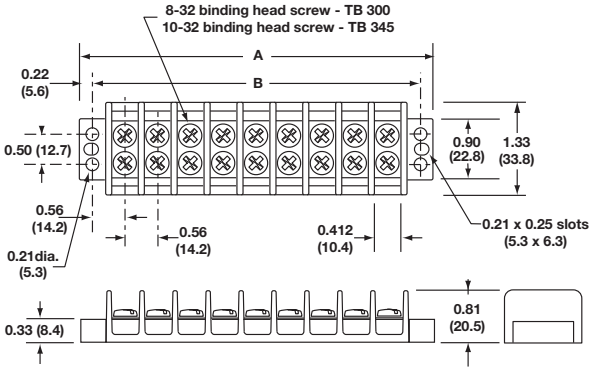

Part Numbering System

Series

T B 3 ☐ ☐ – ☐ ☐

300 - 8-32 screw
345 - 10-32 screw

Poles

02 to **24**

Screw Options

☐ ☐

Blank - steel philslot, zinc-plated
00 - screws shipped bulk
B - brass philslot, nickel-plated
BS - brass Sems philslot, nickel-plated (TB300 only)
SP - steel Sems philslot, zinc-plated
P - steel Sems (P-style) (TB300 Series only)
ST - stainless steel, philslot
STR - stainless steel, phillips (recess)

Marking

☐ ☐

L1 to **L6** - (pg 32)
Marker strips (pg 33)
Covers (pg 32)

Hardware Options

☐ ☐ ☐ ☐

QC1 to **QC20** - quick connects (TB300 only)
†**J301** - flat slip-on jumper
†**0J6** - over barrier jumper
†**0J11** - over barrier jumper

†Contact factory for pole configuration.

Screw Options

B
Brass Philslot
Nickel-Plated

BS
Brass SEMS
Philslot Nickel-Plated

SP
Steel SEMS
Philslot Zinc-Plated

P
Steel SEMS
(P-Style)

ST
Stainless Steel
Philslot

STR
Stainless Steel
Phillips (recess)

Hardware Options

Quick Connects – Assembled TB300 only. Terminals 0.250" x 0.031". Max. current rating 20 Amps. For other orientations, contact factory.

QC1

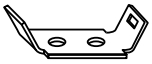

QC2

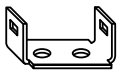

QC3

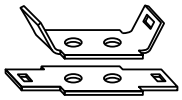

QC4

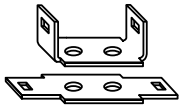

QC5

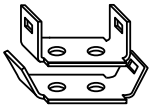

QC6

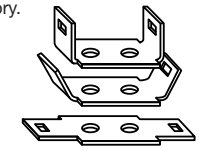

QC7

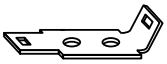

QC8

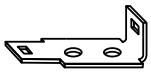

QC9

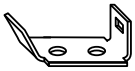

QC10

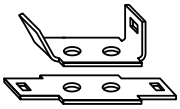

QC11

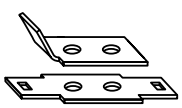

QC12

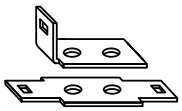

QC13

QC14

QC15

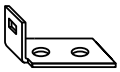

QC16

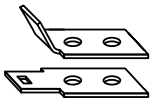

QC17

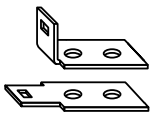

QC18

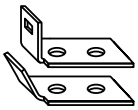

QC19

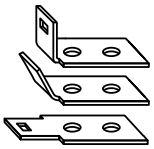

QC20

Quick Connects – Bulk *TB300 only. Min. order per part no. – 100 pieces.

QC201
Flat – none

QC202
QC 45° – none

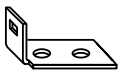

QC203
QC 90° – none

QC204
Flat – Flat

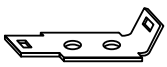

QC205
Flat – QC 45°

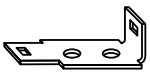

QC206
Flat – QC 90°

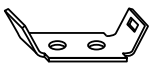

QC207
QC 45° – QC 45°

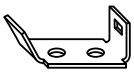

QC208
QC 45° – QC 90°

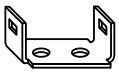

QC209
QC 90° – QC 90°

Jumpers – Bulk Min. order per part no. – 100 pieces. Contact factory for jumper assembly.

†J301
Flat slip-on
(TB300 only)
(J301-J)

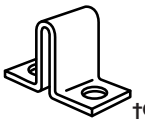

†OJ6
Closed over barrier
(OJ6-J)

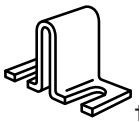

†OJ11
Slip-on over barrier
(OJ11-J)

†Contact factory for pole configuration.

Series TB400

Double Row Terminal Blocks

TB400-05

SPECIFICATIONS
Rating: 75A, 600V
Center Spacing: 0.687” or 11/16” (17.45mm)
Wire Range: #6-14 AWG CU
Screw Size: #10-32 philslot screws
Torque Rating: 20 lb-in.
Distance Between Barriers: 0.56” (14.3mm)
Mounting: #10 screws
Operating Temperature: 130°C (266°F) max., -40°C (-40°F) min.
Material: Molded base: Black, UL rated 94V0 thermoplastic
Terminal plating: Tin over brass; Screws: zinc-plated steel
Breakdown Voltage: 7500V
Agency Information: UL File E62622, CSA File 47235; IEC Compliance; CE Certified

Poles	A	B	Poles	A	B	Poles	A	B
02	2.51	2.06	06	5.26	4.81	10	8.01	7.56
03	3.20	2.75	07	5.95	5.50	11	8.70	8.25
04	3.89	3.44	08	6.64	6.19	12	9.39	8.94
05	4.58	4.13	09	7.33	6.88			

* Dimensions in inches. To convert to millimeters, multiply by 25.4.

Dimensions - in (mm)

TB400

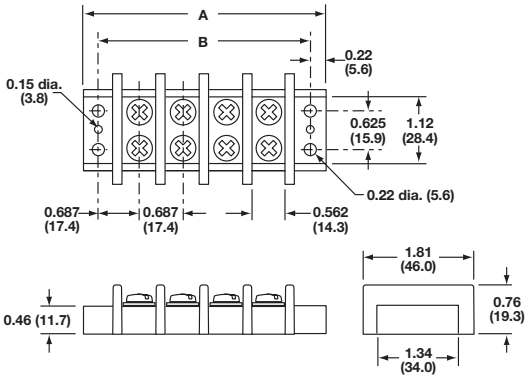

Screw Options

B
Brass Philslot
Nickel-Plated

ST
Stainless Steel
Philslot

STR
Stainless Steel
Phillips (recess)

Hardware Options

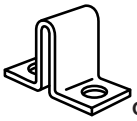

OJ14
Closed over barrier

Part Numbering System

Series		Poles	Screw Options	Marking	Hardware Options
TB400	–	□□	□□□		
		02 to **12**	Blank - steel philslot, zinc-plated **00** - screws shipped bulk **B** - brass philslot, nickel-plated **ST** - stainless steel, philslot **STR** - stainless steel, phillips (recess)	Not available	†**0J14** - Jumper over barrier

†Contact factory for pole configuration.

Terminal Blocks: Single & Double Row
EuroMag Series
Terminal Blocks: Base & Rail Mount
Power Distribution Blocks
Wire Management Products
Edge Connectors, One-Sided Boards
Compliance References

All Series Marking Options & Accessories

Double Row Terminal Blocks

Marking Options

Standard Marking

Standard markings are applied directly to the side(s) of a block. Standard color is white. Standard height is 0.125”.

Note: Blocks marked on both sides require a different code for each side. Example Style L1 on one side of the block requires Style L2 on the other side to ensure common terminal marking. To order, add appropriate suffix (L1, L2, L3, L4, L5 and/or L6) to block part number in the proper sequence.

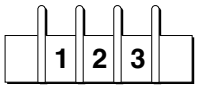

L1

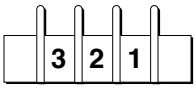

L2

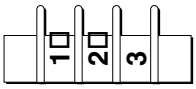

L3

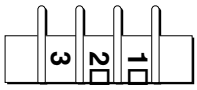

L4

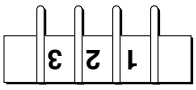

L5

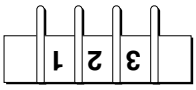

L6

Special Marking

Special markings are available at an additional charge for preparation. Production charges for setup, handling and marking are the same as for standard marking. Drawing(s) must be submitted to ensure accuracy of part required. Consult factory for price and delivery.

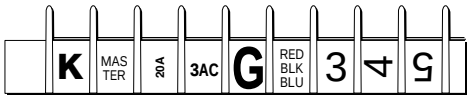

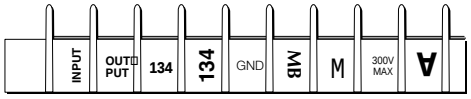

Note: Marking is not available on TB400 Series

Covers

Covers prevent personnel, screws and foreign items from contacting live terminals. Available in white or clear plastic. Two cover clips supplied with each cover. Cover width is 1.31 inches.

All covers must be ordered separately. Consult factory for special legends.

Example: 10 position cover, white, TB100 Series, no legends . . . Part number is X12010.

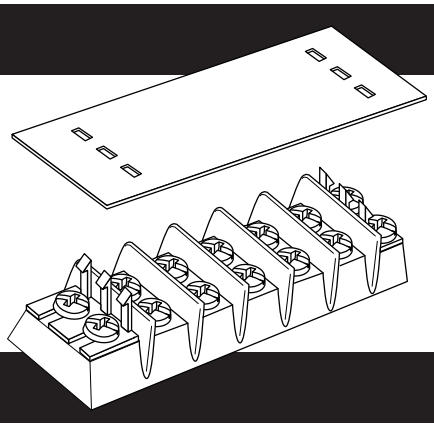

Part Numbering System

Series

X

Cover Strip

120 - TB100/white
119 - TB100/clear
220 - TB200/TB200HB - white
219 - TB200/TB200HB - clear
320 - TB300 & TB345 - white
319 - TB300 & TB345 - clear

Poles

02 to **36** (TB100)
02 to **30** (TB200/TB200HB)
02 to **24** (TB300/TB345)

High Barrier Option Only

HB = High Barrier

Example: 10 position cover, white, TB100 Series, no legends . . . Part number is X12010.

Cover Clips – Bulk

Part Number
DD1-J – TB100 Series
DD2-J – TB200 Series
DD2HB-J–TB200HB Series
DD3-J – TB300 Series

Note: Covers are not available on TB400 Series.

Top & Bottom Marking Strips

Double Row Terminal Blocks

Top Marker Strips

Top mounting marker strips are available in white (opaque) plastic. Two cover clips are supplied with each marker strip.

All top marker strips must be ordered separately. Consult factory for special legends.

Example: 12 position cover, TB200, 0.032” x 0.312”, with no legends . . . Part No. is X20312.

Example: 12 position cover, TB200HB, 0.060” x 0.500”, with no legends . . . Part No. is X23312HB.

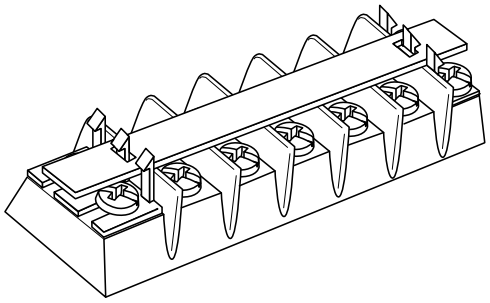

Part Numbering System

Series

X

Top Marker Strip

133 - TB100 (0.060 thk x 0.500w)
103 - TB100 (0.032 thk x 0.312w)
233 - TB200/TB200HB (0.060 thk x 0.500w)
203 - TB200/TB200HB (0.032 thk x 0.312w)
333 - TB300 & TB345 (0.060 thk x 0.500w)
303 - TB300 & TB345 (0.032 thk x 0.380w)

Poles

02 to **36** (TB100)
02 to **30** (TB200/TB200HB)
02 to **24** (TB300/TB345)

Note: Marking Strips are not available on TB400 Series.

High Barrier Option Only

HB = High Barrier

Example: 12 position cover, TB200HB, 0.060” x 0.500”, with no legends . . . Part No. is X23312HB.

Bottom Marker Strips

Bottom mounting marker strips are made of black PVC, 0.030” thick. Space is available to handle most marking situations. All marker strips must be ordered separately.

To order, specify part number, required legends and (BF) bottom forward, (BR) bottom reverse, (TF) top forward, or (TR) top reverse. Consult factory for specials.

Example: 13 position strip, TB100 with no legends, space for marking one side . . . Part number is X10513.

Position for legends (one side, two sides) can be specified standard. Standard legend height is 0.125”. Standard legends are 0-99 and A-Z. Special legends are available on special order. Drawing(s) must be submitted to ensure accuracy of part required.

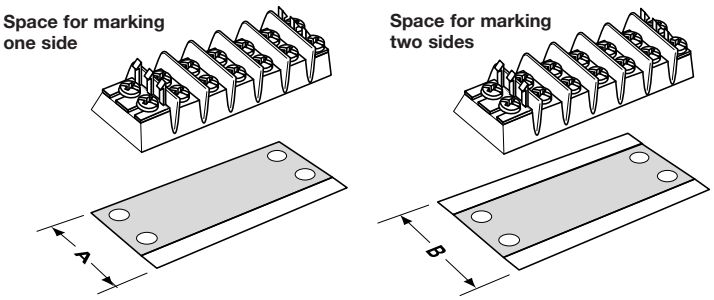

	TB100	TB200	TB200HB	TB300	TB345	TB400
Dim. A	1.13”	1.37”	1.62”	1.58”	1.58”	N/A
Dim. B	1.38”	1.62”	1.81”	1.81”	1.81”	N/A

Part Numbering System

Series

X

Bottom Marker Strip

105 - TB100 – marking one side
101 - TB100 – marking both sides
205 - TB200 – marking one side
201 - TB200 – marking both sides
295 - TB200HB – marking one side
291 - TB200HB – marking both sides
305 - TB300 & TB345 – marking one side
301 - TB300 & TB345 – marking both sides

Poles

02 to **36** (TB100)
02 to **30** (TB200/TB200HB)
02 to **24** (TB300/TB345)

High Barrier Option Only

HB = High Barrier

Orientation

BF – bottom forward
BR – bottom reverse
TF – top forward
TR – top reverse

Note: Marking Strips are not available on TB400 Series.

Terminal Blocks: Single & Double Row
EuroMag Series
Terminal Blocks: Base & Rail Mount
Power Distribution Blocks
Wire Management Products
Edge Connectors, One-Sided Boards
Compliance References

Series TS - Standard Base

Terminal Blocks; 8.00, 10.00, 12.00, 13.50mm Centers

SPECIFICATIONS

Rating: TS08 – 20A, 600V
TS10 – 30A, 600V
TS12 – 35A, 600V
TS14 – 50A, 600V
Wire Range: See Table
Housing Material: Polyamide Type 6/6, 94V2 (white)
Contact Material: Nickel-Plated Brass
Wire Protector: Stainless Steel
Screw Size: See Table
Operating Temperature: 105°C (221°F) max., -30°C (-22°F) min.
Torque Rating: See Table
Construction: Mold-to-Length
Agency Information: UL File E62622; CE Certified

# of Poles	A Dimensions							
	TS08		TS10		TS12		TS14	
	mm	in	mm	in	mm	in	mm	in
2	15.80	0.622	17.50	0.689	20.70	0.815	23.00	0.906
3	23.80	0.937	27.50	1.083	32.70	1.287	36.50	1.437
4	31.80	1.252	37.50	1.476	44.70	1.760	50.00	1.969
5	39.80	1.567	47.50	1.870	56.70	2.232	63.50	2.500
6	47.80	1.882	57.50	2.264	68.70	2.705	77.00	3.031
7	55.80	2.232	67.50	2.657	80.70	3.177	90.50	3.563
8	63.80	2.512	77.50	3.051	92.70	3.650	104.00	4.094
9	71.80	2.827	87.50	3.445	104.70	4.122	117.50	4.626
10	79.80	3.142	97.50	3.839	116.70	4.594	131.00	5.157
11	87.80	3.457	107.50	4.232	128.70	5.067	144.50	5.689
12	95.80	3.772	117.50	4.626	140.70	5.539	158.00	6.220

Dimensions

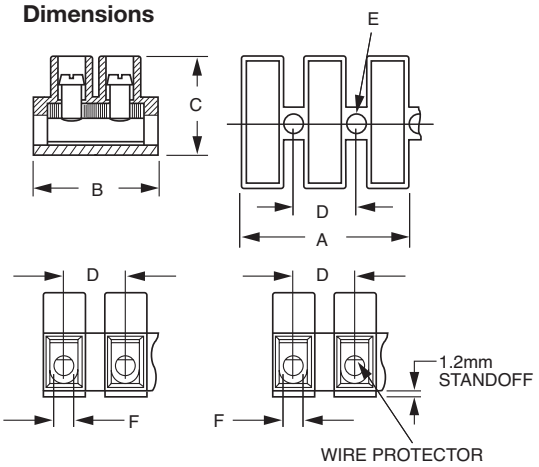

Position	Torque lb-in	Clamping Area	Wire Range AWG (Cu)	Dimensions mm (in)					
				Screw	B	C	D	E	F
TS0801	3.5	4.0mm²	22-12 Sol./Str.	M2.6x5	17.00 (0.67)	14.50 (0.57)	8.00 (0.32)	2.90 (0.11)	2.8±0.1 (0.11)
TS0802	3.5	1.5mm²	22-12 Sol./Str	M2.6x5	17.00 (0.67)	14.50 (0.57)	8.00 (0.32)	2.90 (0.11)	2.8±0.1 (0.11)
TS1001	4.4	6.0mm²	22-10 Sol. 14-10 Str.	M3.0x6	20.20 (0.80)	17.00 (0.67)	10.00 (0.39)	3.60 (0.14)	3.4±0.1 (0.13)
TS1002	4.4	2.5mm²	22-12 Sol./Str. 10 Sol.	M3.0x6	20.20 (0.80)	17.00 (0.67)	10.00 (0.39)	3.60 (0.14)	3.4±0.1 (0.13)
TS1201	7.0	10.0mm²	22-10 Sol./Str.	M3.5x7	23.80 (0.94)	19.00 (0.75)	12.00 (0.47)	3.90 (0.14)	4.2±0.1 (0.15)
TS1202	7.0	6.0mm²	22-10 Sol./Str.	M3.5x7	23.80 (0.94)	19.00 (0.75)	12.00 (0.47)	3.90 (0.15)	4.2±0.1 (0.15)
TS1401	12.0	16.0mm²	20-8 Sol./Str.	M4.0x9	25.60 (1.01)	25.20 (0.99)	13.50 (0.53)	4.40 (0.17)	5.0±0.1 (0.19)
TS1402	12.0	10.0mm²	20-8 Sol./Str.	M4.0x9	25.60 (1.01)	25.20 (0.99)	13.50 (0.53)	4.40 (0.17)	5.0±0.1 (0.19)

Part Numbering System

Spacing		Base	Positions
T S □ □	–	□ □	□ □
08 **10** **12** **14**		**01** - std **02** - std w/ wire protector	**02** to **12**

COOPER Bussmann

Series TS - Flat Base

Terminal Blocks; 8.00, 10.00mm Centers

SPECIFICATIONS

Rating: TS08 – 20A, 600V
TS10 – 30A, 600V
Wire Range: See Table
Housing Material: Polyamide Type 6/6, 94V2 (white)
Contact Material: Nickel-Plated Brass
Wire Protector: Stainless Steel
Screw Size: See Table
Operating Temperature: 105°C (221°F) max., -30°C (-22°F) min.
Torque Rating: See Table
Construction: Mold-to-Length
Agency Information: UL File E62622; CE Certified

Dimensions

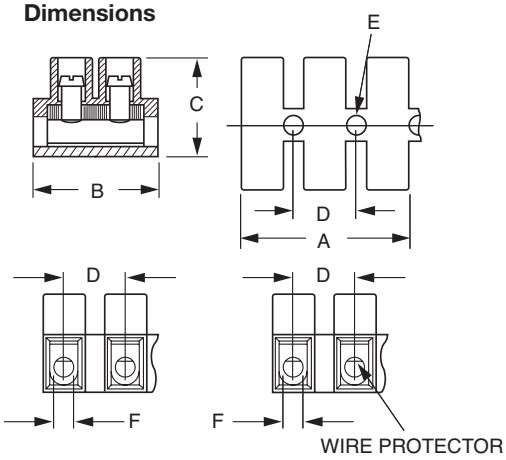

# of Poles	A Dimensions			
	TS08		TS10	
	mm	in	mm	in
2	15.80	0.622	17.50	0.689
3	23.80	0.937	27.50	1.083
4	31.80	1.252	37.50	1.476
5	39.80	1.567	47.50	1.870
6	47.80	1.882	57.50	2.264
7	55.80	2.232	67.50	2.657
8	63.80	2.512	77.50	3.051
9	71.80	2.827	87.50	3.445
10	79.80	3.142	97.50	3.839
11	87.80	3.457	107.50	4.232
12	95.80	3.772	117.50	4.626

Position	Torque lb-in	Clamping Area	Wire Range AWG (Cu)	Dimensions mm (in)					
				Screw	B	C	D	E	F
TS0803	3.5	4.0mm²	22-12 Sol./Str.	M2.6x5	16.30 (0.64)	13.30 (0.53)	8.00 (0.32)	2.90 (0.11)	2.8±0.1 (0.11)
TS0804	3.5	1.5mm²	22-12 Sol./Str	M2.6x5	16.30 (0.64)	13.30 (0.52)	8.00 (0.32)	2.90 (0.11)	2.8±0.1 (0.11)
TS1003	4.4	6.0mm²	22-10 Sol. 14-10 Str.	M3.0x6	20.20 (0.80)	15.80 (0.62)	10.00 (0.39)	3.60 (0.14)	3.2±0.1 (0.13)
TS1004	4.4	2.5mm²	22-12 Sol./Str. 10 Sol.	M3.0x6	20.20 (0.80)	15.80 (0.62)	10.00 (0.39)	3.60 (0.14)	3.2±0.1 (0.13)

Part Numbering System

Spacing		Base	Positions
T S □ □	–	□ □	□ □
08 10		**03** - flat **04** - flat w/ wire protector	**02** to **12**

Terminal Blocks: Single & Double Row
EuroMag Series
Terminal Blocks: Base & Rail Mount
Power Distribution Blocks
Wire Management Products
Edge Connectors, One-Sided Boards
Compliance References

Series TS - Raised Base

Terminal Blocks; 8.00, 10.00mm Centers

Note: TS Series standard base pictured above

SPECIFICATIONS

Rating: TS08 – 20A, 600V
TS10 – 30A, 600V
Wire Range: See Table
Housing Material: Polyamide Type 6/6, 94V2 (white)
Contact Material: nickel-plated Brass
Wire Protector: Stainless Steel
Screw Size: See Table
Operating Temperature: 105°C (221°F) max., -30°C (-22°F) min.
Torque Rating: See Table
Construction: Mold to Length
Agency Information: UL File E62622; CE Certified

Dimensions

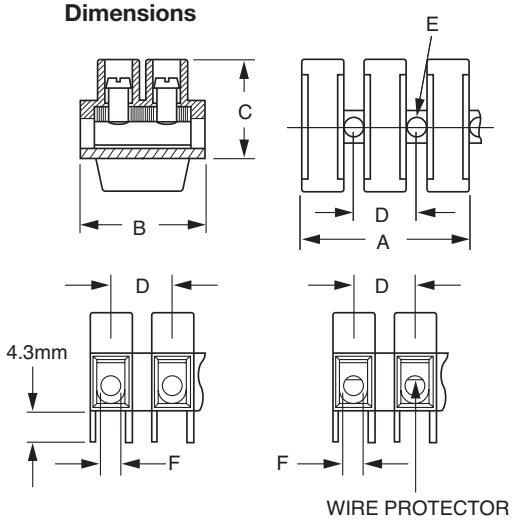

# of Poles	A Dimensions			
	TS08		TS10	
	mm	in	mm	in
2	15.80	0.622	17.50	0.689
3	23.80	0.937	27.50	1.083
4	31.80	1.252	37.50	1.476
5	39.80	1.567	47.50	1.870
6	47.80	1.882	57.50	2.264
7	55.80	2.232	67.50	2.657
8	63.80	2.512	77.50	3.051
9	71.80	2.827	87.50	3.445
10	79.80	3.142	97.50	3.839
11	87.80	3.457	107.50	4.232
12	95.80	3.772	117.50	4.626

Position	Torque lb-in	Clamping Area	Wire Range AWG (Cu)	Dimensions mm (in)					
				Screw	B	C	D	E	F
TS0805	3.5	4.0mm²	22-12 Sol./Str.	M2.6x5	16.30 (0.64)	16.90 (0.67)	8.00 (0.32)	2.90 (0.11)	2.8±0.1 (0.11)
TS0806	3.5	1.5mm²	22-12 Sol./Str	M2.6x5	16.30 (0.64)	16.90 (0.67)	8.00 (0.32)	2.90 (0.11)	2.8±0.1 (0.11)
TS1005	4.4	6.0mm²	22-10 Sol. 14-10 Str.	M3.0x6	20.20 (0.80)	20.10 (0.79)	10.00 (0.39)	3.60 (0.14)	3.2±0.1 (0.13)
TS1006	4.4	2.5mm²	22-12 Sol./Str. 10 Sol.	M3.0x6	20.20 (0.80)	20.10 (0.79)	10.00 (0.39)	3.60 (0.14)	3.2±0.1 (0.13)

Part Numbering System

Spacing		Base	Positions
T S □ □	-	□ □	□ □
08 10		**05** - stand offs **06** - stand offs w/ wire protector	**02** to **12**

EUROMAG (EM) SERIES

Aside from the collection covered in the next section, MAGNUM also offers a variety of other standard European style PCB terminal blocks. Configurations include straight to board, plug and header, screwless, insulation displacement connectors (IDC), 2-tiered, 3-tiered, mold-to-length, modular (stackable) design, and terminal blocks with horizontal, vertical, 35 and 45 degree wire entry orientations. Available center spacings range from 2.54 mm to 15.00 mm.

Log onto our website at
www.cooperbussmann.com/magnum
to see all of MAGNUM's product offerings.

PCB Mount:	
• **Spring Clamp Design**	p38-46
• **Cage Clamp Design**	p47-57
• **Two & Three Tier**	p58-62
• **High Current (28A-115A)**	p63-73
Screwless	p74-82
Pluggable	p83-115

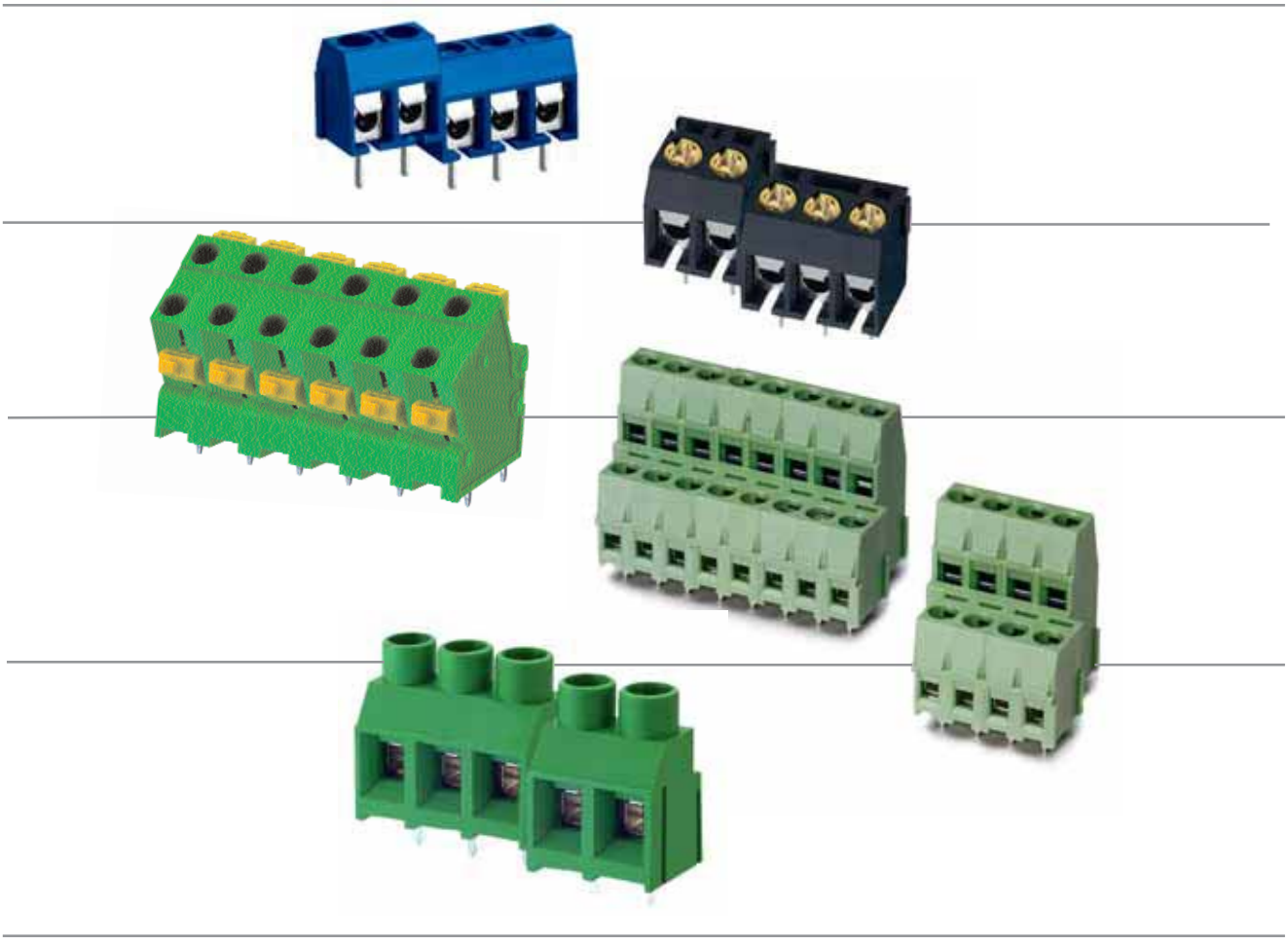

EM3123 Series
Euro-Mag Terminal Blocks
3.50 Centers; Modular

EM312305

SPECIFICATIONS
Rating: 6A, 300V
Center Spacing: 0.138" (3.50mm)
Wire Range: #16-26 AWG
Housing Material: Black Polyamide Type 6/6, 94V0
Contact Material: Tin-Plated Brass
Wire Protector: Stainless Steel
Screw Size: M2.0 Chromate Steel
Operating Temperature: 105°C (221°F) max., -33°C (-27°F) min.
Torque Rating: 2.5 lb-in.
Recommended PCB Hole Diameters: 0.055" (1.40mm)
Construction: Modular design features dovetails for interlocking to achieve longer lengths
Agency Information: c UL us File E62622; CE Certified

Dimensions - mm (in)

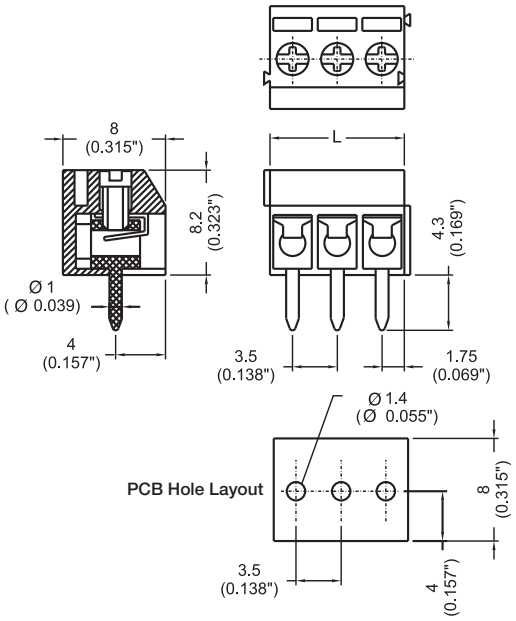

Poles	L (mm)	Poles	L (mm)
2	7.0	14	49.5
3	10.5	15	52.5
4	14.0	16	56.0
5	17.5	17	59.5
6	21.0	18	63.0
7	24.5	19	66.5
8	28.0	20	70.0
9	31.5	21	73.5
10	35.0	22	77.0
11	38.5	23	80.5
12	42.0	24	84.0
13	45.5		

To convert to inches, divide by 25.4

Part Numbering System

Series **# of Poles**

E M 3 1 2 3 ☐☐

02 to **24**

EM2665 Series
Euro-Mag Terminal Blocks
5.00 Centers

EM266512

SPECIFICATIONS
Rating: 10A, 300V
Center Spacing: 0.197" (5.00mm)
Consult factory for 0.394" (10.00mm)
Wire Range: #14-22 AWG
Housing Material: UL rated 94V0 Thermoplastic
Contact Material: Brass Tin-Plated
Screw Size: M3x5 Zinc-Plated Steel
Operating Temperature: 105°C (221°F) max., -40°C (-40°F) min.
Torque Rating: 7 lb-in.
Recommended PCB Hole Diameters: 0.055" (1.40mm)
Construction: Mold to Length
Connector Style: Spring Clamp
Agency Information: c UL us File E62622; CE Certified

Position	L (mm)	Position	L (mm)
02	10.0	14	70.0
03	15.0	15	75.0
04	20.0	16	80.0
05	25.0	17	85.0
06	30.0	18	90.0
07	35.0	19	95.0
08	40.0	20	100.0
09	45.0	21	105.0
10	50.0	22	110.0
11	55.0	23	115.0
12	60.0	24	120.0
13	65.0		

To convert to inches, divide by 25.4

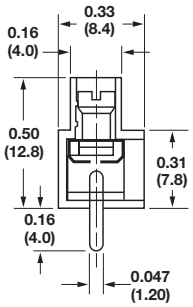

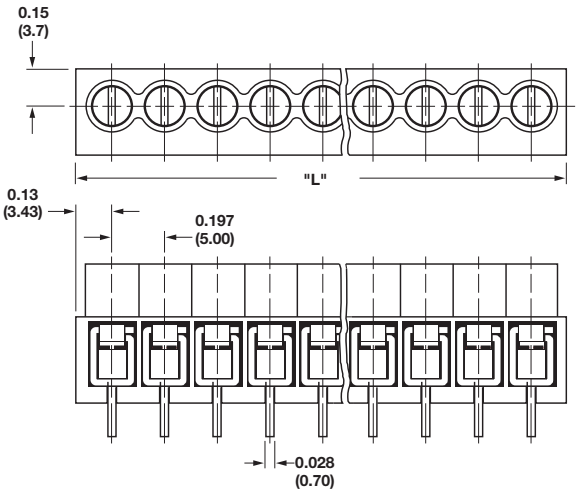

Also available in 10.00mm (EM2661XX).

Part Numbering System

Series	# of Positions
EM2665	☐☐
	02 to **24**

EM3660 Series
Euro-Mag Terminal Blocks
5.00 Centers; Modular

EM366005

SPECIFICATIONS
Rating: 16A, 250V
Center Spacing: 0.197" (5.00mm)
Wire Range: #16-24 AWG
Housing Material: Blue Polyamide Type 6/6, 94V0
Contact Material: Tin-Plated Brass
Wire Protector: Stainless Steel
Screw Size: M3 Nickel-Plated Steel
Operating Temperature: 105°C (221°F) max., -33°C (-27°F) min.
Torque Rating: 4.0 lb-in.
Recommended PCB Hole Diameters: 0.055" (1.40mm)
Construction: Modular design features dovetails for interlocking to achieve longer lengths
Agency Information: c UL us File E62622; CE Certified

Poles	L (mm)	Poles	L (mm)
2	10.0	14	70.0
3	15.0	15	75.0
4	20.0	16	80.0
5	25.0	17	85.0
6	30.0	18	90.0
7	35.0	19	95.0
8	40.0	20	100.0
9	45.0	21	105.0
10	50.0	22	110.0
11	55.0	23	115.0
12	60.0	24	120.0
13	65.0		

To convert to inches, divide by 25.4

Dimensions - mm (in)

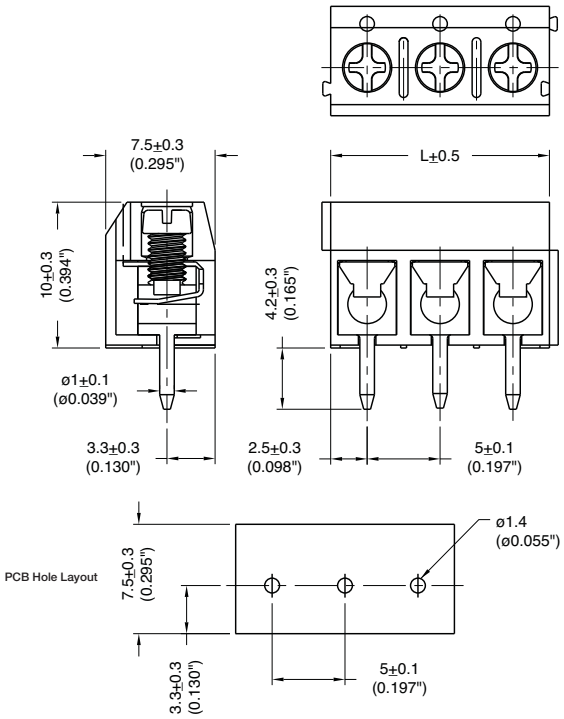

Part Numbering System

Series

E M 3 6 6 0

# of Poles

☐☐

02 to **24**

EM3665 Series
Euro-Mag Terminal Blocks
5.00 Centers; Modular

EM366512

SPECIFICATIONS
Rating: 10A, 300V
Center Spacing: 0.197" (5.00mm)
Wire Range: #16-22 AWG
Housing Material: UL rated 94V0 Thermoplastic
Contact Material: Tin-Plated Brass
Screw Size: M2.5x5 Zinc-Plated Steel
Operating Temperature: 105°C (221°F) max., -40°C (-40°F) min.
Torque Rating: 2.5 lb-in.
Recommended PCB Hole Diameters: 0.055" (1.40mm)
Construction: Modular design features dovetails for interlocking to achieve longer lengths
Connector Style: Spring Clamp
Agency Information: c UL us File E62622; CE Certified

Poles	L (mm)	Poles	L (mm)
2	10.0	14	70.0
3	15.0	15	75.0
4	20.0	16	80.0
5	25.0	17	85.0
6	30.0	18	90.0
7	35.0	19	95.0
8	40.0	20	100.0
9	45.0	21	105.0
10	50.0	22	110.0
11	55.0	23	115.0
12	60.0	24	120.0
13	65.0		

To convert to inches, divide by 25.4

Dimensions - mm (in)

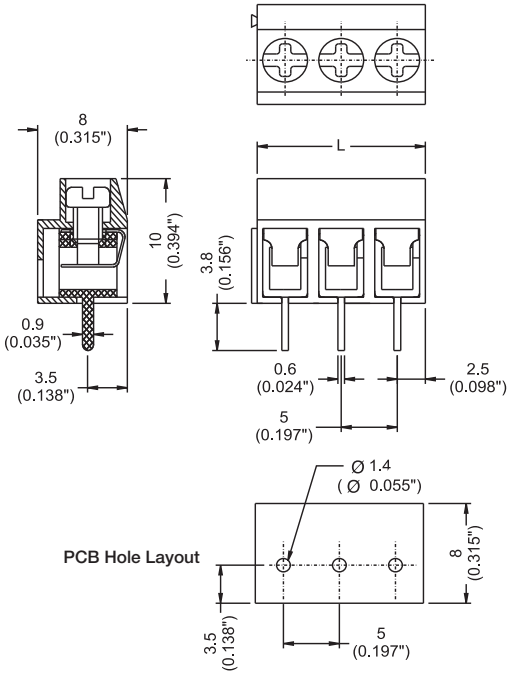

Part Numbering System

Series **# of Poles**

EM3665 ☐☐

02 to **24**

EM3675 Series
Euro-Mag Terminal Blocks
5.00 Centers

SPECIFICATIONS
Rating: 10A, 300V
Center Spacing: 0.197" (5.00mm)
Wire Range: #14-26 AWG
Housing Material: UL rated 94V0 Thermoplastic
Contact Material: Tin-Plated Brass
Screw Size: M2x6, Nickel-Plated Steel
Operating Temperature: 105°C (221°F) max., -40°C (-40°F) min.
Torque Rating: 4.0 lb-in.
Recommended PCB Hole Diameters: 0.055" (1.40mm)
Construction: Mold to Length
Connector Style: Spring Clamp
Agency Information: c UL us File E62622; CE Certified

Dimensions - mm (in)

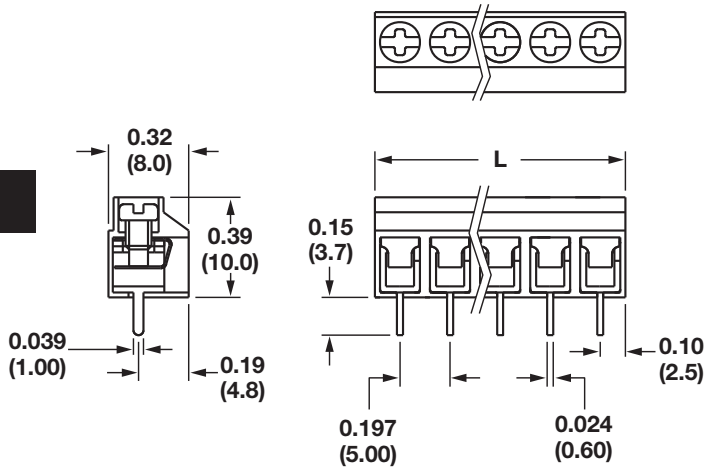

Poles	L (mm)	Poles	L (mm)
2	10.0	15	75.0
3	15.0	16	80.0
4	20.0	17	85.0
5	25.0	18	90.0
6	30.0	19	95.0
7	35.0	20	100.0
8	40.0	21	105.0
9	45.0	22	110.0
10	50.0	23	115.0
11	55.0	24	120.0
12	60.0	25	125.0
13	65.0	26	130.0
14	70.0	27	135.0

To convert to inches, divide by 25.4

Part Numbering System

Series — E M 3 6 7 5

# of Poles — ☐☐

02 to **27**

EM3127 Series
Euro-Mag Terminal Blocks
7.50 Centers; Modular

EM312705

SPECIFICATIONS
Rating: 10A, 300V
Center Spacing: 0.295" (7.50mm)
Wire Range: #14-22 AWG
Housing Material: Black Polyamide Type 6/6, 94V0
Contact Material: Tin-Plated Brass
Wire Protector: Stainless Steel
Screw Size: M3.0 Nickel-Plated Steel
Operating Temperature: 105°C (221°F) max., -33°C (-27°F) min.
Torque Rating: 3.5 lb-in.
Recommended PCB Hole Diameters: 0.055" (1.40mm)
Construction: Modular design features dovetails for interlocking to achieve longer lengths
Agency Information: c UL us File E62622; CE Certified

Poles	L (mm)	Poles	L (mm)
2	15.0	14	105.0
3	22.5	15	112.5
4	33.0	16	120.0
5	37.5	17	127.5
6	45.0	18	133.0
7	52.5	19	142.5
8	60.0	20	150.0
9	67.5	21	157.5
10	75.0	22	165.0
11	82.5	23	172.5
12	90.0	24	180.0
13	97.5		

To convert to inches, divide by 25.4

Dimensions - mm (in)

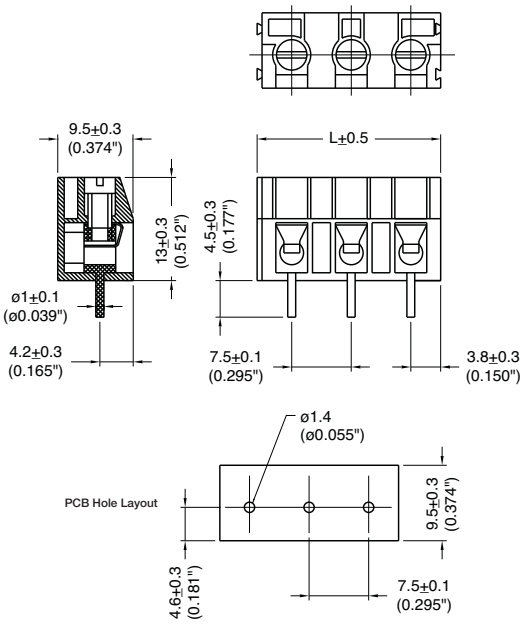

Part Numbering System

Series **# of Poles**

E M 3 1 2 7 ☐☐

02 to **24**

EM2661 Series
Euro-Mag Terminal Blocks
10.00 Centers

EM266106

SPECIFICATIONS
Rating: 10A, 300V
Center Spacing: 0.394" (10.00mm)
Wire Range: #14-26 AWG
Housing Material: UL rated 94V0 Thermoplastic
Contact Material: Tin-Plated Brass
Wire Protector: Stainless Steel
Screw Size: M2.6 Chromate Steel
Operating Temperature: 105°C (221°F) max., -55°C (-40°F) min.
Torque Rating: 4.0 lb-in.
Recommended PCB Hole Diameters: 0.055" (1.40mm)
Construction: Mold-to-Length
Agency Information: c UL us File E62622; CE Certified

Poles	L (mm)	Poles	L (mm)
2	15.0	8	75.0
3	25.0	9	85.0
4	35.0	10	95.0
5	45.0	11	105.0
6	55.0	12	115.0
7	65.0	13	125.0

To convert to inches, divide by 25.4

Dimensions - mm (in)

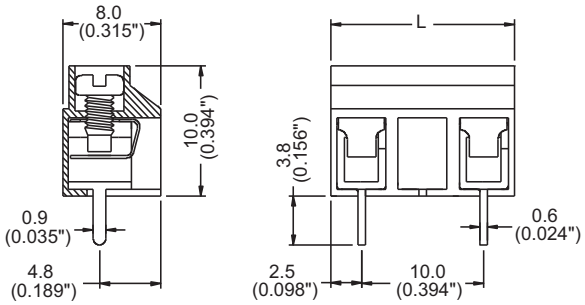

PCB Hole Layout

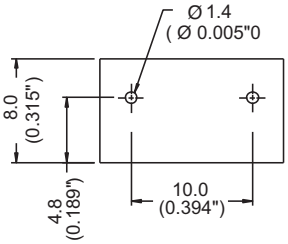

Part Numbering System

Series

E M 2 6 6 1

# of Poles

☐☐

02 to **13**

EM3661 Series
Euro-Mag Terminal Blocks
10.00 Centers; Modular

EM366102

SPECIFICATIONS
Rating: 10A, 300V
Center Spacing: 0.394" (10.00mm)
Wire Range: #14-26 AWG
Housing Material: UL rated 94V0 Thermoplastic
Contact Material: Tin-Plated Brass
Wire Protector: Stainless Steel
Screw Size: M2.6 Chromate Steel
Operating Temperature: 105°C (221°F) max., -55°C (-40°F) min.
Torque Rating: 4.0 lb-in.
Recommended PCB Hole Diameters: 0.055" (1.40mm)
Construction: Modular design features dovetails for interlocking to achieve longer lengths
Agency Information: c UL us File E62622; CE Certified

Poles	L (mm)	Poles	L (mm)
2	15.0	9	50.0
3	20.0	10	55.0
4	25.0	11	60.0
5	30.0	12	65.0
6	35.0	13	70.0
7	40.0	14	75.0
8	45.0		

To convert to inches, divide by 25.4

Dimensions - mm (in)

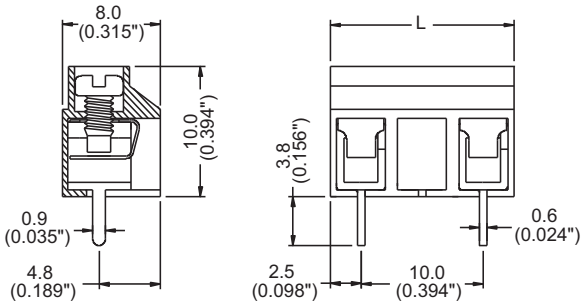

PCB Hole Layout

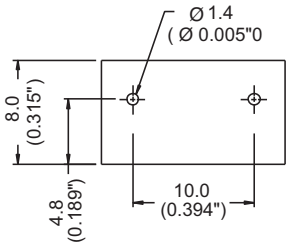

Part Numbering System

Series **# of Poles**

E M 3 6 6 1 ☐☐

02 to **14**

EM3671 Series
Euro-Mag Terminal Blocks
10.00 Centers

EM367106

SPECIFICATIONS
Rating: 10A, 300V
Center Spacing: 0.394" (10.00mm)
Wire Range: #14-26 AWG
Housing Material: UL rated 94V0 Thermoplastic
Contact Material: Tin-Plated Brass
Wire Protector: Stainless Steel
Screw Size: M2.6 Chromate Steel
Operating Temperature: 105°C (221°F) max., -55°C (-40°F) min.
Torque Rating: 4.0 lb-in.
Recommended PCB Hole Diameters: 0.055" (1.40mm)
Construction: Mold-to-Length
Agency Information: c UL us File E62622; CE Certified

Poles	L (mm)	Poles	L (mm)
2	15.0	8	75.0
3	25.0	9	85.0
4	35.0	10	95.0
5	45.0	11	105.0
6	55.0	12	115.0
7	65.0	13	125.0

To convert to inches, divide by 25.4

Dimensions - mm (in)

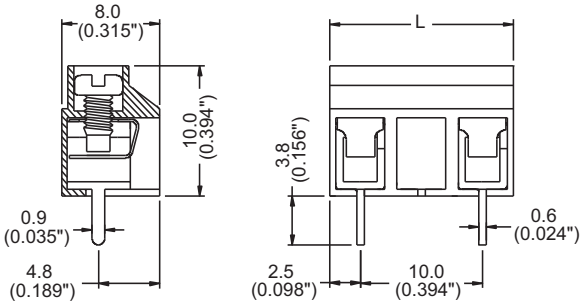

PCB Hole Layout

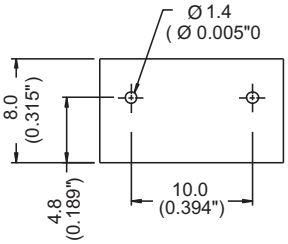

Part Numbering System

Series

E M 3 6 7 1

# of Poles

☐☐

02 to **13**

EM3923 Series
Euro-Mag Terminal Blocks
3.50 Centers; Modular

EM392305

SPECIFICATIONS
Rating: 8A, 300V
Center Spacing: 0.138" (3.50mm)
Wire Range: #16-26 AWG
Housing Material: UL rated 94V0 Thermoplastic
Contact Material: Brass Tin-Plated
Cage Clamp: Brass, Nickel-Plated
Screw Size: M2.0 Nickel-Plated Steel
Operating Temperature: 105°C (221°F) max., -40°C (-67°F) min.
Torque Rating: 2.5 lb-in.
Recommended PCB Hole Diameters: 0.055" (1.40mm)
Construction: Modular design features dovetails for interlocking to achieve longer lengths
Agency Information: c UL us File E62622; CE Certified

Poles	L (mm)	Poles	L (mm)
2	7.0	14	49.5
3	10.5	15	52.5
4	14.0	16	56.0
5	17.5	17	59.5
6	21.0	18	63.0
7	24.5	19	66.5
8	28.0	20	70.0
9	31.5	21	73.5
10	35.0	22	77.0
11	38.5	23	80.5
12	42.0	24	84.0
13	45.5		

To convert to inches, divide by 25.4

Dimensions - mm (in)

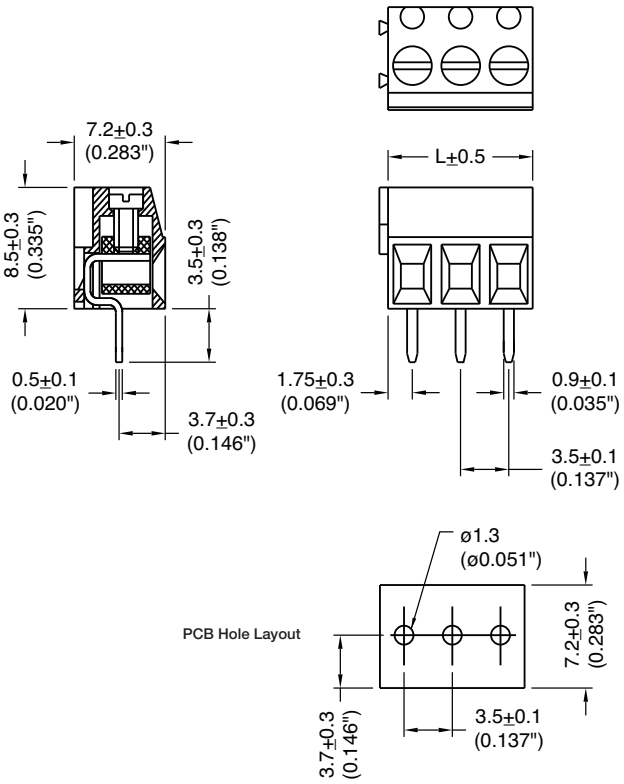

Part Numbering System

Series **# of Poles**

E M 3 9 2 3 ☐☐

02 to **24**

EM3503 Series
Euro-Mag Terminal Blocks
3.81 Centers; Modular

EM350305

SPECIFICATIONS
Rating: 8A, 300V
Center Spacing: 0.150” (3.81mm)
Wire Size: #16-26 AWG
Housing Material: UL rated 94V0 Thermoplastic
Contact Material: Brass Tin-Plated
Screw Size: M 2x3 Zinc-Plated Steel
Operating Temperature: 105°C (221°F) max., -40°C (-40°F) min.
Torque Rating: 4.5 lb-in.
Recommended PCB Hole Diameters: 0.055” (1.40mm)
Construction: Modular design features dovetails for interlocking to achieve longer lengths
Agency Information: cULus File E62622; CE Certified

Poles	L (mm)	Poles	L (mm)
2	7.62	14	53.34
3	11.43	15	57.15
4	15.24	16	60.96
5	19.05	17	64.77
6	22.86	18	68.58
7	26.67	19	72.39
8	30.48	20	76.20
9	34.29	21	80.01
10	38.10	22	83.82
11	41.91	23	87.63
12	45.72	24	91.44
13	49.53		

To convert to inches, divide by 25.4

Dimensions - mm (in)

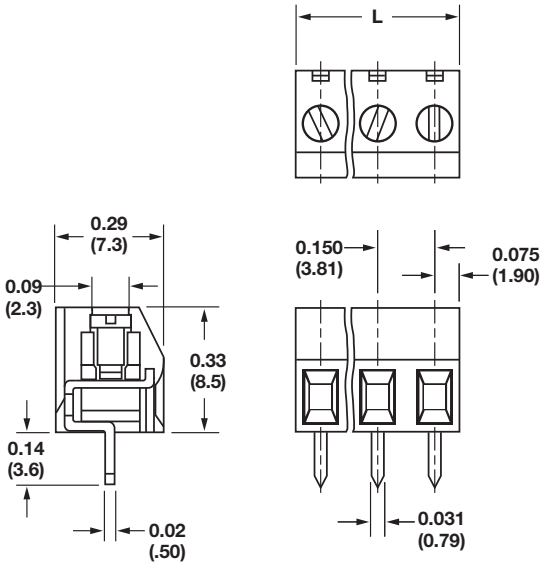

Part Numbering System

Series

EM3503

# of Positions

□□

02 to **24**

EM2585 Series
Euro-Mag Terminal Blocks
5.00 Centers; Modular

EM258505V

SPECIFICATIONS
Rating: 16A, 300V
Center Spacing: 0.197" (5.00mm)
Consult factory for 0.394" (10.00mm)
Wire Range: #12-26 AWG
Housing Material: UL rated 94V0 Thermoplastic
Contact Material: Brass Tin-Plated
Screw Size: M3x5 Zinc-Plated Steel
Operating Temperature: 105°C (221°F) max., -40°C (-40°F) min.
Torque Rating: 7 lb-in.
Recommended PCB Hole Diameters: 0.055" (1.40mm)
Construction: Modular design features dovetails for interlocking to achieve longer lengths
Connector Style: Rising Cage Clamp
Agency Information: c UL us File E62622; CE Certified

Position	L (mm)	Position	L (mm)
02	10.0	14	70.0
03	15.0	15	75.0
04	20.0	16	80.0
05	25.0	17	85.0
06	30.0	18	90.0
07	35.0	19	95.0
08	40.0	20	100.0
09	45.0	21	105.0
10	50.0	22	110.0
11	55.0	23	115.0
12	60.0	24	120.0
13	65.0		

To convert to inches, divide by 25.4

Dimensions - mm (in)

HORIZONTAL

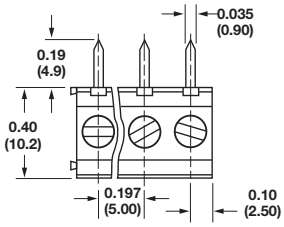

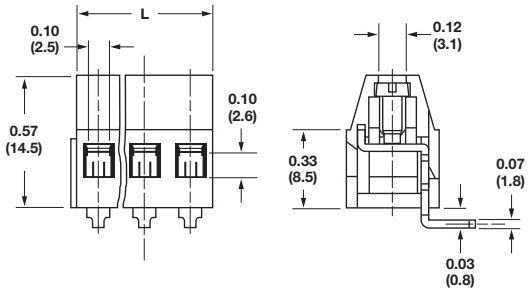

VERTICAL

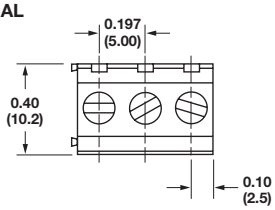

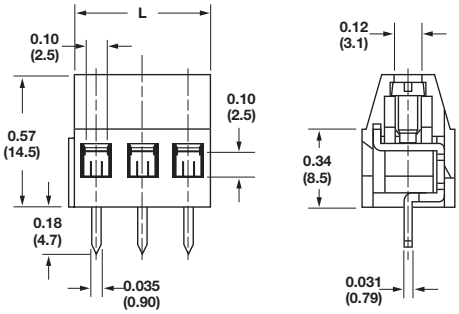

Part Numbering System

Series	# of Positions	Orientation
EM2585	☐☐	☐
	02 to **24**	**H** - horizontal **V** - vertical

EM3225 Series
Euro-Mag Terminal Blocks
35° Angle; 5.00 Centers; Modular

EM322505

SPECIFICATIONS
Rating: 16A, 300V
Center Spacing: 0.197" (5.00mm)
Consult factory for 0.393" (10.00mm)
Wire Range: #14-24 AWG
Housing Material: UL rated 94V0 Thermoplastic
Contact Material: Brass Tin-Plated
Cage Clamp: Brass, Nickel-Plated
Screw Size: M2.6 nickel-plated Steel
Operating Temperature: 105°C (221°F) max., -40°C (-40°F) min.
Torque Rating: 5 lb-in.
Recommended PCB Hole Diameters: 0.055" (1.40mm)
Construction: Modular design features dovetails for interlocking to achieve longer lengths
Agency Information: File E62622; CE Certified

Poles	L (mm)	Poles	L (mm)
2	10.0	14	70.0
3	15.0	15	75.0
4	20.0	16	80.0
5	25.0	17	85.0
6	30.0	18	90.0
7	35.0	19	95.0
8	40.0	20	100.0
9	45.0	21	105.0
10	50.0	22	110.0
11	55.0	23	115.0
12	60.0	24	120.0
13	65.0		

To convert to inches, divide by 25.4

Dimensions - mm (in)

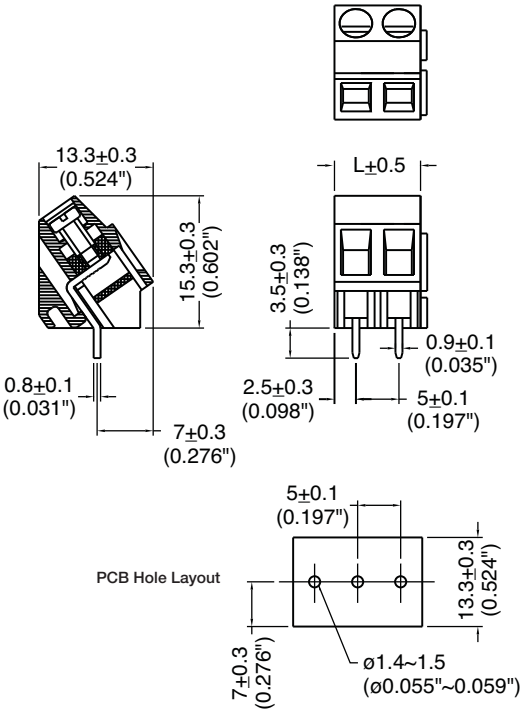

Part Numbering System

Series

E M 3 2 2 5

# of Poles

☐☐

02 to **24**

EM2205 Series
Euro-Mag Terminal Blocks
45° Angle, 5.00 Centers, Modular

EM220505

SPECIFICATIONS
Rating: 10A, 300V
Center Spacing: 0.197" (5.00mm)
Consult factory for 0.393" (10.00mm)
Wire Range: #12-24 AWG
Housing Material: Grey Polyamide Type 6/6, 94V0
Contact Material: Brass Tin-Plated
Cage Clamp: Brass, Tin-Plated
Screw Size: M2.6 Chromate Steel
Operating Temperature: 105°C (221°F) max., -33°C (-27°F) min.
Torque Rating: 3.5 lb-in.
Recommended PCB Hole Diameters: 0.055" (1.40mm)
Construction: Modular design features dovetails for interlocking to achieve longer lengths
Agency Information: c UL us File E62622; CE Certified

Poles	L (mm)	Poles	L (mm)
2	10.0	14	70.0
3	15.0	15	75.0
4	20.0	16	80.0
5	25.0	17	85.0
6	30.0	18	90.0
7	35.0	19	95.0
8	40.0	20	100.0
9	45.0	21	105.0
10	50.0	22	110.0
11	55.0	23	115.0
12	60.0	24	120.0
13	65.0		

To convert to inches, divide by 25.4

Dimensions - mm (in)

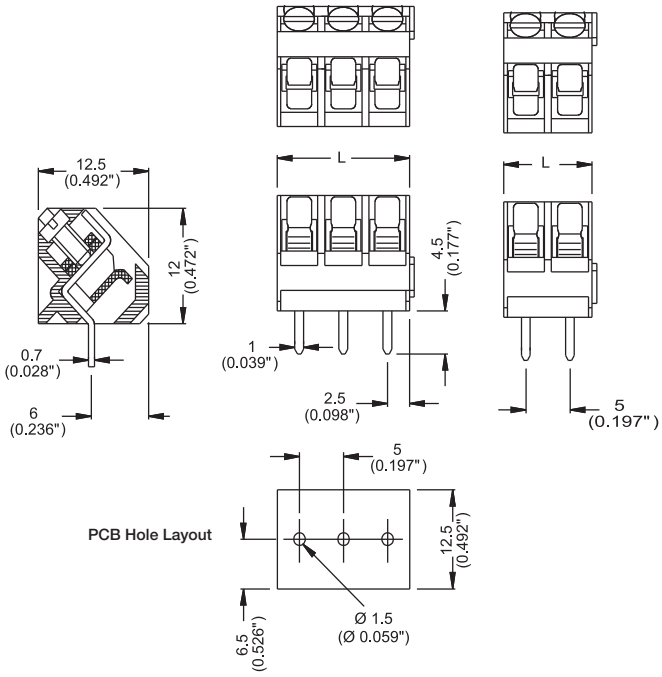

Part Numbering System

Series **# of Poles**

E M 2 2 0 5 ☐☐

02 to **24**

EM2505 Series
Euro-Mag Terminal Blocks
5.08 Centers; Modular

EM250505V

SPECIFICATIONS
Rating: 16A, 300V
Center Spacing: 0.20” (5.08mm)
Consult factory for 0.40” (10.16mm)
Wire Range: #12-26 AWG
Housing Material: UL rated 94V0 Thermoplastic
Contact Material: Brass Tin-Plated
Screw Size: M3x5 Zinc-Plated Steel
Operating Temperature: 105°C (221°F) max., -40°C (-40°F) min.
Torque Rating: 7 lb-in.
Recommended PCB Hole Diameters: 0.055” (1.40mm)
Construction: Modular design features dovetails for interlocking to achieve longer lengths
Connector Style: Rising Cage Clamp
Agency Information: File E62622; CE Certified

Position	L (mm)	Position	L (mm)
02	10.16	14	71.12
03	15.24	15	76.20
04	20.32	16	81.28
05	25.40	17	86.36
06	30.48	18	91.44
07	35.56	19	96.52
08	40.64	20	101.60
09	45.72	21	106.68
10	50.80	22	111.76
11	55.88	23	116.84
12	60.96	24	121.92
13	66.04		

To convert to inches, divide by 25.4

Dimensions - mm (in)

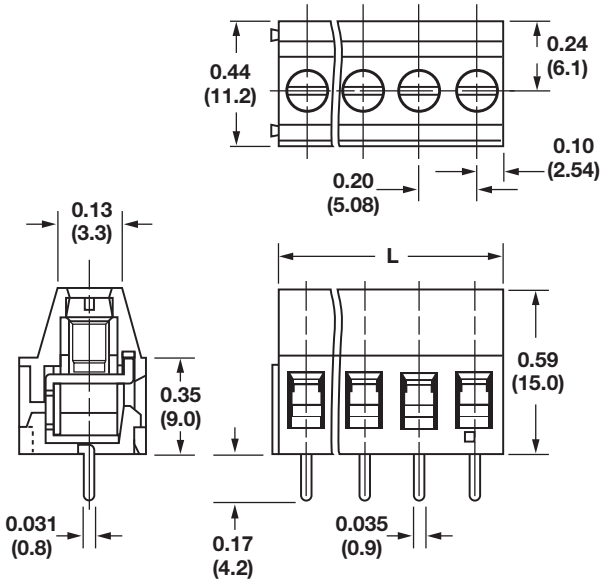

Part Numbering System

Series	# of Positions	Orientation
EM2505	☐☐	☐
	02 to **24**	**V** - vertical

EM3228 Series
Euro-Mag Terminal Blocks
35° Angle; 5.08 Centers; Modular

EM322805

SPECIFICATIONS
Rating: 16A, 300V
Center Spacing: 0.20” (5.08mm)
Consult factory for 0.40" (10.16mm)
Wire Range: #14-24 AWG
Housing Material: UL rated 94V0 Thermoplastic
Contact Material: Brass Tin-Plated
Cage Clamp: Brass, Nickel-Plated
Screw Size: M2.6 Nickel-Plated Steel
Operating Temperature: 105°C (221°F) max., -40°C (-40°F) min.
Torque Rating: 5 lb-in.
Recommended PCB Hole Diameters: 0.055" (1.40mm)
Construction: Modular design features dovetails for interlocking to achieve longer lengths
Agency Information: c UL us File E62622; CE Certified

Poles	L (mm)	Poles	L (mm)
2	10.16	14	72.12
3	15.24	15	76.20
4	20.32	16	81.28
5	25.40	17	86.36
6	30.48	18	91.44
7	35.56	19	96.52
8	40.64	20	101.60
9	45.72	21	106.68
10	50.80	22	111.76
11	55.88	23	116.84
12	60.96	24	121.92
13	66.04		

To convert to inches, divide by 25.4

Dimensions - mm (in)

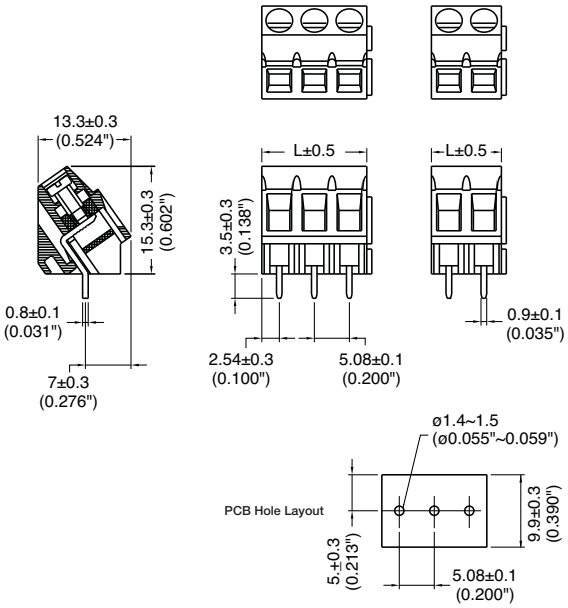

Part Numbering System

Series **# of Poles**

EM3228 ☐☐

02 to **24**

EM2507 Series
Euro-Mag Terminal Blocks
7.50 Centers; Modular

EM250705

SPECIFICATIONS
Rating: 16A, 300V
Center Spacing: 0.295" (7.50mm)
Wire Range: #14-22 AWG
Housing Material: UL rated 94V0 Thermoplastic
Contact Material: Brass Tin-Plated
Cage Clamp: Brass, Nickel-Plated
Screw Size: M2.6 Nickel-Plated Steel
Operating Temperature: 105°C (221°F) max., -40°C (-40°F) min.
Torque Rating: 5.0 lb-in.
Recommended PCB Hole Diameters: 0.055" (1.40mm)
Construction: Modular design features dovetails for interlocking to achieve longer lengths
Agency Information: c UL us File E62622; CE Certified

Poles	L (mm)	Poles	L (mm)
2	15.0	14	105.0
3	22.5	15	112.5
4	33.0	16	120.0
5	37.5	17	127.5
6	45.0	18	133.0
7	52.5	19	142.5
8	60.0	20	150.0
9	67.5	21	157.5
10	75.0	22	165.0
11	82.5	23	172.5
12	90.0	24	180.0
13	97.5		

To convert to inches, divide by 25.4

Dimensions - mm (in)

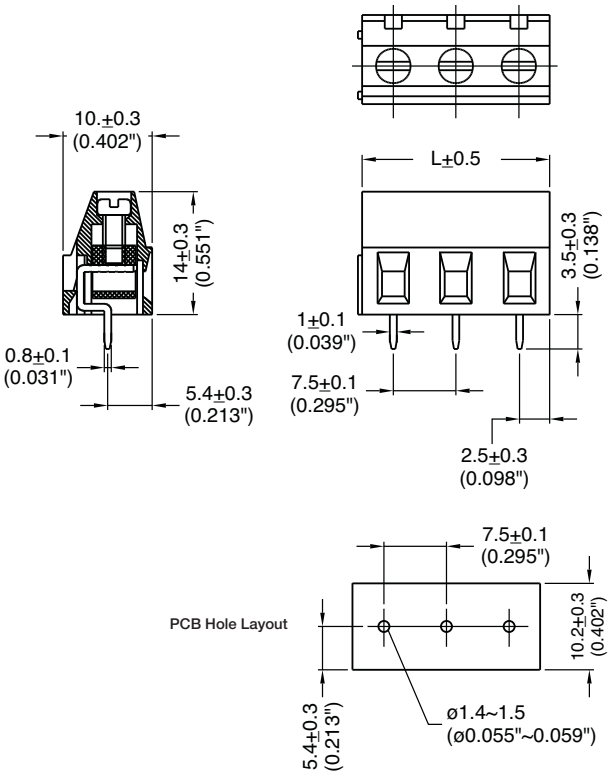

Part Numbering System

Series **# of Poles**

E M 2 5 0 7 ☐☐

02 to **24**

EM3227 Series
Euro-Mag Terminal Blocks
35° Angle, 7.50 Centers; Modular

EM322705

SPECIFICATIONS
Rating: 16A, 300V
Center Spacing: 0.295" (7.50mm)
Consult factory for 0.40" (10.16mm)
Wire Range: #14-24 AWG
Housing Material: UL rated 94V0 Thermoplastic
Contact Material: Brass Tin-Plated
Cage Clamp: Brass, Nickel-Plated
Screw Size: M2.6 Nickel-Plated Steel
Operating Temperature: 105°C (221°F) max., -40°C (-40°F) min.
Torque Rating: 5.0 lb-in.
Recommended PCB Hole Diameters: 0.055" (1.40mm)
Construction: Modular design features dovetails for interlocking to achieve longer lengths
Agency Information: File E62622; CE Certified

Poles	L (mm)	Poles	L (mm)
2	15.0	14	105.0
3	22.5	15	112.5
4	33.0	16	120.0
5	37.5	17	127.5
6	45.0	18	133.0
7	52.5	19	142.5
8	60.0	20	150.0
9	67.5	21	157.5
10	75.0	22	165.0
11	82.5	23	172.5
12	90.0	24	180.0
13	97.5		

To convert to inches, divide by 25.4

Dimensions - mm (in)

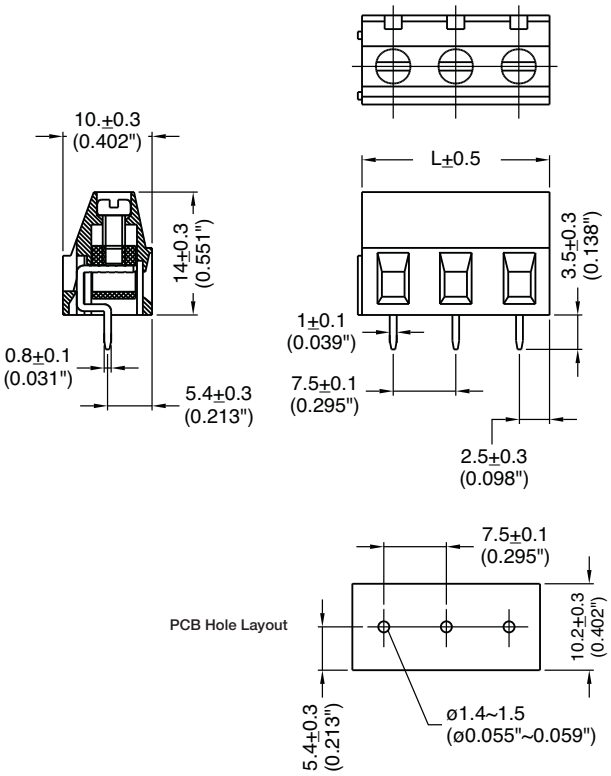

Part Numbering System

Series **# of Poles**

E M 3 2 2 7 ☐☐

02 to **24**

EM2506 Series
Euro-Mag Terminal Blocks
7.62 Centers; Modular

EM250605

SPECIFICATIONS
Rating: 16A, 300V
Center Spacing: 0.30" (7.62mm)
Wire Range: #14-24 AWG
Housing Material: UL rated 94V0 Thermoplastic
Contact Material: Brass Tin-Plated
Cage Clamp: Brass, Nickel-Plated
Screw Size: M2.6 Nickel-Plated Steel
Operating Temperature: 105°C (221°F) max., -40°C (-40°F) min.
Torque Rating: 5.0 lb-in.
Recommended PCB Hole Diameters: 0.055" (1.40mm)
Construction: Modular design features dovetails for interlocking to achieve longer lengths
Agency Information: File E62622; CE Certified

Poles	L (mm)	Poles	L (mm)
2	15.24	14	106.69
3	22.86	15	114.31
4	30.48	16	121.93
5	38.10	17	129.55
6	45.72	18	137.17
7	53.34	19	144.79
8	60.96	20	152.41
9	68.58	21	160.03
10	76.20	22	167.65
11	83.82	23	175.27
12	91.44	24	182.89
13	99.07		

To convert to inches, divide by 25.4

Dimensions - mm (in)

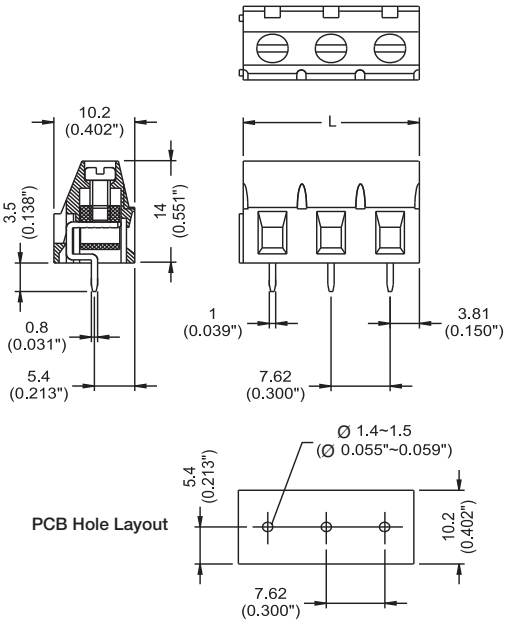

Part Numbering System

Series **# of Poles**

EM2506 ☐☐

02 to **24**

EM3226 Series
Euro-Mag Terminal Blocks
35° Angle, 7.62 Centers; Modular

EM322605

SPECIFICATIONS
Rating: 16A, 300V
Center Spacing: 0.30” (7.62mm)
Wire Range: #14-24 AWG
Housing Material: UL rated 94V0 Thermoplastic
Contact Material: Brass Tin-Plated
Cage Clamp: Brass, Nickel-Plated
Screw Size: M2.6 Nickel-Plated Steel
Operating Temperature: 105°C (221°F) max., -40°C (-40°F) min.
Torque Rating: 5.0 lb-in.
Recommended PCB Hole Diameters: 0.055" (1.40mm)
Construction: Modular design features dovetails for interlocking to achieve longer lengths
Agency Information: c UL us File E62622; CE Certified

Poles	L (mm)	Poles	L (mm)
2*	15.24	14	106.69
3*	22.86	15	114.31
4	30.48	16	121.93
5	38.10	17	129.55
6	45.72	18	137.17
7	53.34	19	144.79
8	60.96	20	152.41
9	68.58	21	160.03
10	76.20	22	167.65
11	83.82	23	175.27
12	91.44	24	182.89
13	99.07		

* Mold To Length
To convert to inches, divide by 25.4

Dimensions - mm (in)

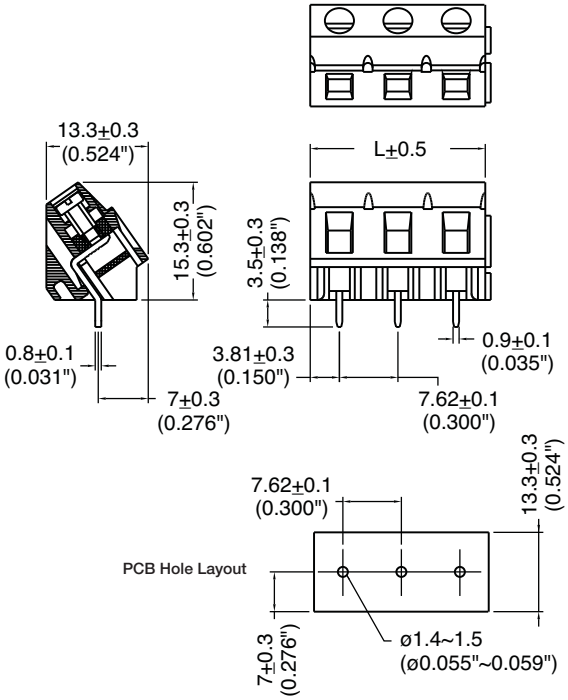

Part Numbering System

Series **# of Poles**

E M 3 2 2 6 ☐☐

02 to **24**

EM2403 Series
Euro-Mag Terminal Blocks
Two Tier; 3.81 Centers; Modular

EM240308

EM240304

SPECIFICATIONS
Rating: 10A, 300V
Center Spacing: 0.150" (3.81mm)
Wire Range: #16-26 AWG
Housing Material: UL rated 94V0 Thermoplastic
Contact Material: Brass Tin-Plated
Cage Clamp: Brass, Nickel-Plated
Screw Size: M2.0 Nickel-Plated Steel
Operating Temperature: 105°C (221°F) max., -40°C (-40°F) min.
Torque Rating: 2.5 lb-in.
Recommended PCB Hole Diameters: 0.055" (1.40mm)
Construction: Modular design features dovetails for interlocking to achieve longer lengths
Agency Information: c UL us File E62622; CE Certified

Dimensions - mm (in)

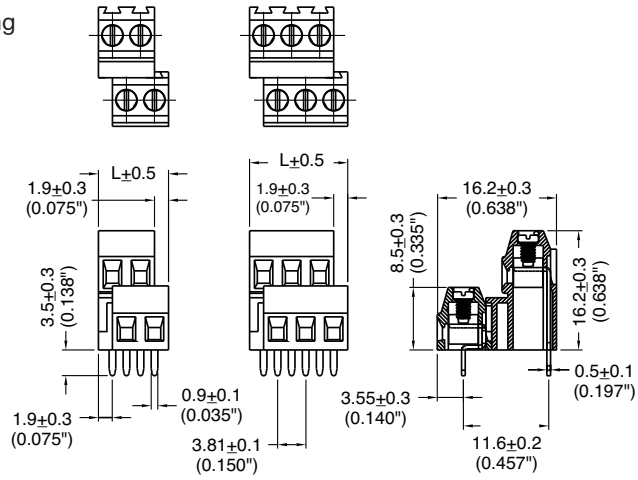

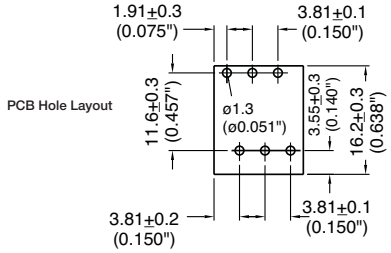

Poles	L (mm)	Poles	L (mm)
2	9.53	8	32.39
3	13.34	9	36.20
4	17.15	10	40.00
5	20.96	11	43.80
6	24.77	12	47.60
7	28.58		

To convert to inches, divide by 25.4

Part Numbering System

Series	# of Poles
EM2403	☐☐
	02 - 12

EM2803 Series
Euro-Mag Terminal Blocks
Three Tier; 3.81 Centers; Modular

EM280302

SPECIFICATIONS
Rating: 10A, 300V
Center Spacing: 0.150" (3.81mm)
Wire Range: #16-26 AWG
Housing Material: UL rated 94V0 Thermoplastic
Contact Material: Brass Tin-Plated
Cage Clamp: Brass, Nickel-Plated
Screw Size: M2.0 Nickel-Plated Steel
Operating Temperature: 105°C (221°F) max., -40°C (-40°F) min.
Torque Rating: 2.5 lb-in.
Recommended PCB Hole Diameters: 0.055" (1.40mm)
Construction: Modular design features dovetails for interlocking to achieve longer lengths
Agency Information: c UL us File E62622; CE Certified

Poles	L (mm)	Poles	L (mm)
2	11.43	8	34.29
3	15.24	9	38.10
4	19.05	10	41.90
5	22.86	11	45.70
6	26.67	12	49.50
7	30.48		

To convert to inches, divide by 25.4

Dimensions - mm (in)

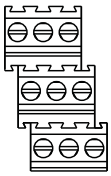

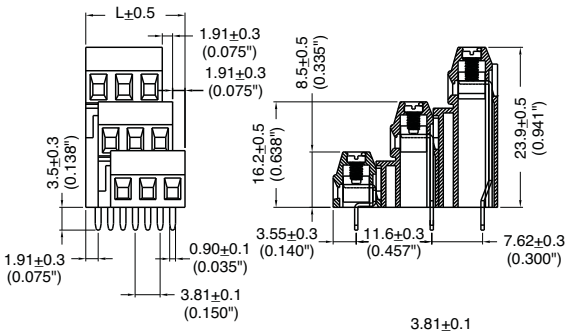

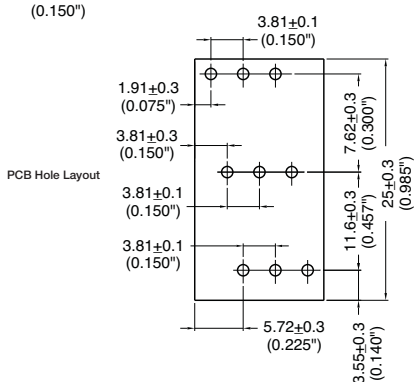

Part Numbering System

Series **# of Poles**

EM2803 ☐☐

02 - 12

EM2445 Series
Euro-Mag Terminal Blocks
Two Tier; 5.00 Centers; Modular

SPECIFICATIONS
Rating: 16A, 300V
Center Spacing: 0.197" (5.00mm)
Wire Range: #14-24 AWG
Housing Material: UL rated 94V0 Thermoplastic
Contact Material: Tin Plated Brass
Screw Size: M2x6 Nickel-Plated Steel
Operating Temperature: 105°C (221°F) max., -40°C (-40°F) min.
Torque Rating: 5.0 lb-in.
Recommended PCB Hole Diameters: 0.055" (1.40mm)
Construction: Modular design features dovetails for interlocking to achieve longer lengths
Connector Style: Rising Cage Clamp
Agency Information: c UL us File E62622; CE Certified

Poles	L (mm)	Poles	L (mm)
2	12.5	13	67.5
3	17.5	14	72.5
4	22.5	15	77.5
5	27.5	16	82.5
6	32.5	17	87.5
7	37.5	18	92.5
8	42.5	19	97.5
9	47.5	20	102.5
10	52.5	21	107.5
11	57.5	22	112.5
12	62.5	23	117.5
		24	122.5

To convert to inches, divide by 25.4

Dimensions - mm (in)

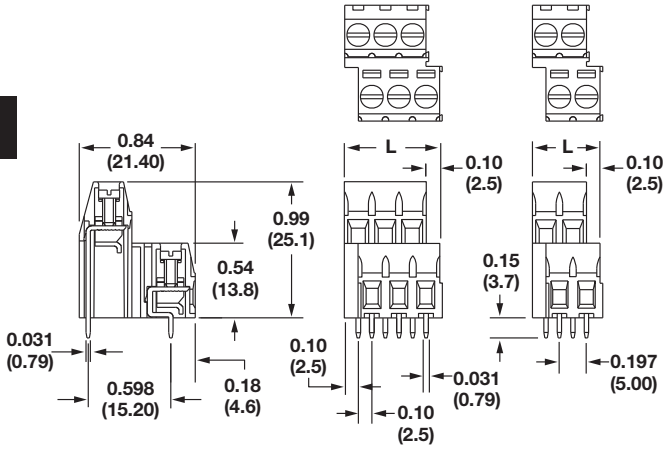

Part Numbering System

Series

E M 2 4 4 5

# of Poles

☐☐

02 to **24**

EM2448 Series
Euro-Mag Terminal Blocks
Two Tier; 5.08 Centers; Modular

SPECIFICATIONS
Rating: 16A, 300V
Center Spacing: 0.20” (5.08mm)
Wire Range: #14-24 AWG
Housing Material: UL rated 94V0 Thermoplastic
Contact Material: Brass Tin-Plated
Cage Clamp: Brass, Nickel-Plated
Screw Size: M2.6 Nickel-Plated Steel
Operating Temperature: 105°C (221°F) max., -40°C (-40°F) min.
Torque Rating: 4.5 lb-in.
Recommended PCB Hole Diameters: 0.055" (1.40mm)
Construction: Modular design features dovetails for interlocking to achieve longer lengths
Agency Information: c UL us File E62622; CE Certified

Dimensions - mm (in)

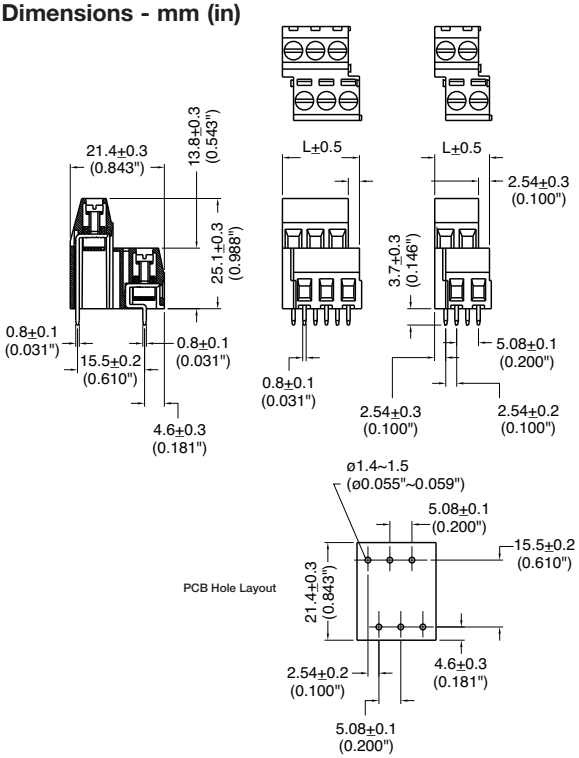

Poles	L (mm)	Poles	L (mm)
2	10.16	14	71.12
3	15.24	15	76.20
4	20.32	16	81.28
5	25.40	17	86.36
6	30.48	18	91.44
7	35.56	19	96.52
8	40.64	20	101.60
9	45.72	21	106.68
10	50.80	22	111.76
11	55.88	23	116.84
12	60.96	24	121.92
13	66.04		

To convert to inches, divide by 25.4

Part Numbering System

Series **# of Poles**

EM2448 ☐☐

02 to **24**

EM2855 Series
Euro-Mag Terminal Blocks
Three Tier; 5.00 Centers

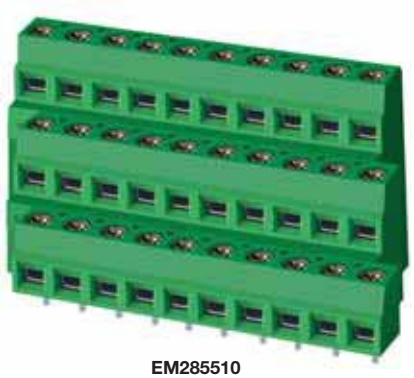

EM285510

SPECIFICATIONS
Rating: 10A, 300V
Center Spacing: 0.197" (5.00mm)
Wire Range: #14-26 AWG
Housing Material: UL rated 94V0 Thermoplastic
Contact Material: Brass Tin-Plated
Cage Clamp: Brass Nickel-Plated
Screw Size: M26 Steel Chromatized
Operating Temperature: 105°C max., -55°C min.
Torque Rating: 4.5 lb-in
Recommended PCB Hole Diameters: 1.30mm (0.051")
Construction: Mold-to-Length
Agency Information: c UL us File E62622; CE Certified

Poles	L (mm)
2	12.5
3	17.5
4	22.5
5	27.5
6	32.5

To convert to inches, divide by 25.4

Dimensions - mm (in)

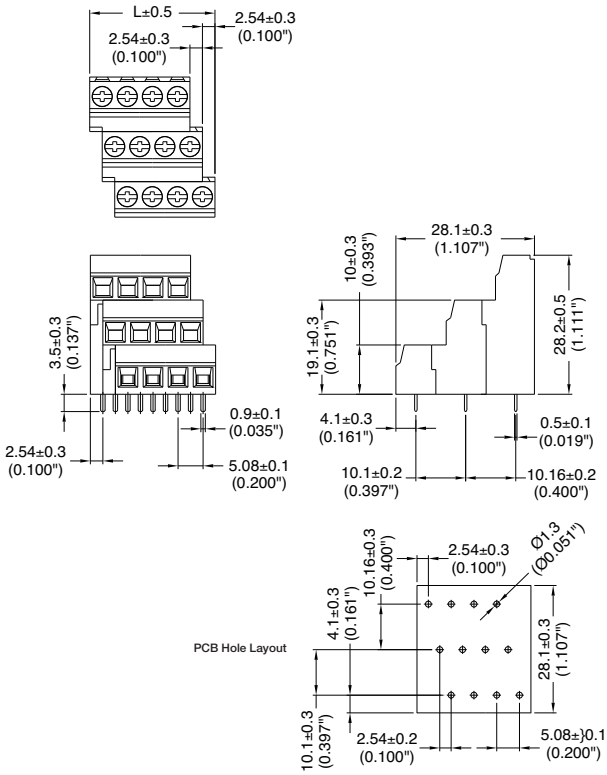

Part Numbering System

Series **# of Poles**

EM2855 ☐☐

02 to **06**

Note: Longer positions, please consult factory.

EM2905 Series
Euro-Mag Terminal Blocks
High Current; 5.00 Centers; Modular

EM290508

SPECIFICATIONS
Rating: 28A, 250V
Center Spacing: 0.197" (5.00mm)
Wire Range: #12-24 AWG
Housing Material: UL rated 94V0 Thermoplastic
Contact Material: Brass Tin-Plated
Cage Clamp: Brass, Nickel-Plated
Screw Size: M2.6 nickel-plated Steel
Operating Temperature: 105°C (221°F) max., -40°C (-40°F) min.
Torque Rating: 4.5 lb-in.
Recommended PCB Hole Diameters: 0.055" (1.40mm)
Construction: Modular design features dovetails for interlocking to achieve longer lengths
Agency Information: File E62622; CE Certified

Poles	L (mm)	Poles	L (mm)
2	10.0	14	70.0
3	15.0	15	75.0
4	20.0	16	80.0
5	25.0	17	85.0
6	30.0	18	90.0
7	35.0	19	95.0
8	40.0	20	100.0
9	45.0	21	105.0
10	50.0	22	110.0
11	55.0	23	115.0
12	60.0	24	120.0
13	65.0		

To convert to inches, divide by 25.4

Dimensions - mm (in)

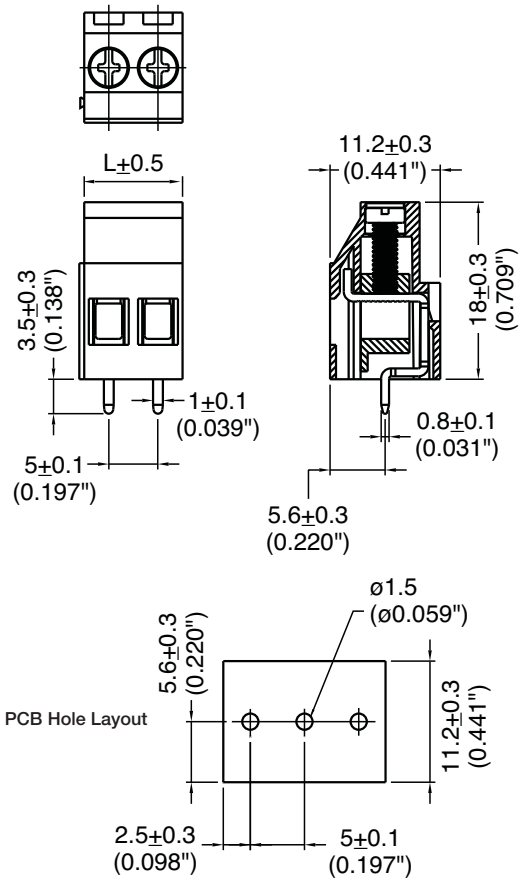

Part Numbering System

Series **# of Poles**

E M 2 9 0 5 ☐☐

02 to **24**

EM2908 Series
Euro-Mag Terminal Blocks
High Current; 5.08 Centers; Modular

EM290808

SPECIFICATIONS
Rating: 28A, 250V
Center Spacing: 0.20" (5.08mm)
Wire Range: #12-24 AWG
Housing Material: UL rated 94V0 Thermoplastic
Contact Material: Brass Tin-Plated
Cage Clamp: Brass, Nickel-Plated
Screw Size: M2.6 Nickel-Plated Steel
Operating Temperature: 105°C (221°F) max., -40°C (-40°F) min.
Torque Rating: 4.5 lb-in.
Recommended PCB Hole Diameters: 0.055" (1.40mm)
Construction: Modular design features dovetails for interlocking to achieve longer lengths
Agency Information: File E62622; CE Certified

Dimensions - mm (in)

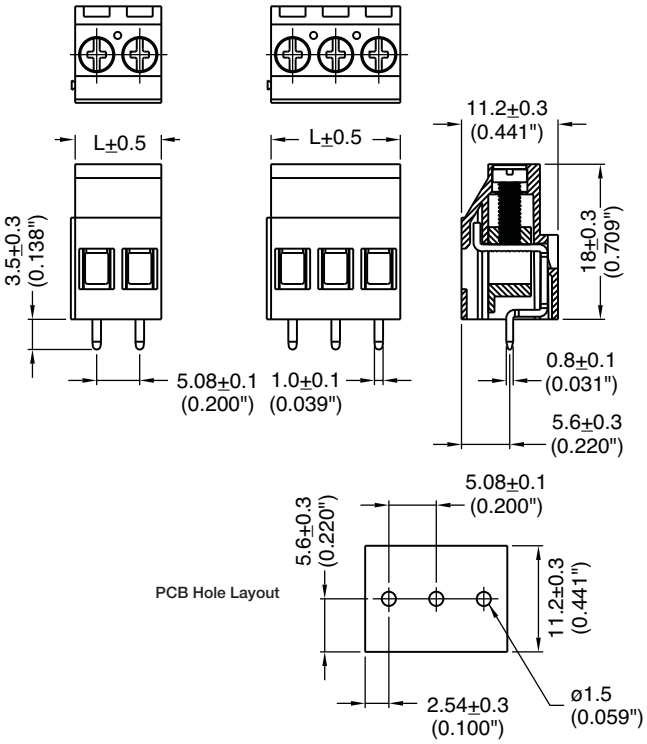

Poles	L (mm)	Poles	L (mm)
2	10.16	14	71.12
3	15.24	15	76.20
4	20.32	16	81.28
5	25.40	17	86.36
6	30.48	18	91.44
7	35.56	19	96.52
8	40.64	20	101.60
9	45.72	21	106.68
10	50.80	22	111.76
11	55.88	23	116.84
12	60.96	24	121.92
13	66.04		

To convert to inches, divide by 25.4

Part Numbering System

Series **# of Poles**

EM2908 ☐☐

02 to **24**

EM9126 Series
Euro-Mag Terminal Blocks
6.35 Centers; Modular

EM912605

SPECIFICATIONS
Rating: 30A, 300V
Center Spacing: 0.250" (6.35mm)
Wire Range: #10-24 AWG
Housing Material: UL rated 94V0 Thermoplastic
Contact Material: Brass Tin-Plated
Cage Clamp: Brass, Nickel-Plated
Screw Size: M3.0 Steel Nickel-Plated
Operating Temperature: 105°C (221°F) max., -40°C (-40°F) min.
Torque Rating: 5.5 lb-in.
Recommended PCB Hole Diameters: 0.071" (1.80mm)
Construction: Modular design features dovetails for interlocking to achieve longer lengths
Agency Information: c UL us File E62622; CE Certified

Dimensions - mm (in)

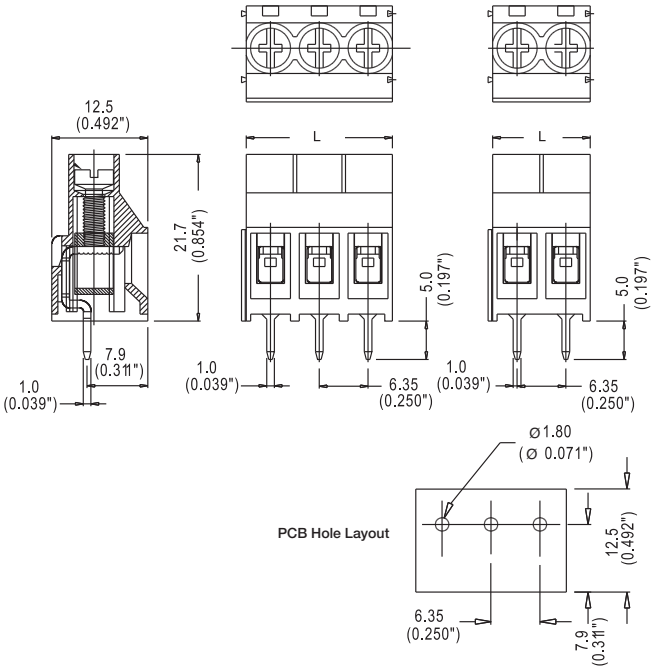

Poles	L (mm)	Poles	L (mm)
2	12.70	14	88.90
3	19.05	15	95.25
4	25.40	16	101.60
5	31.75	17	107.95
6	38.10	18	114.30
7	44.45	19	120.65
8	50.80	20	127.00
9	57.15	21	133.35
10	63.50	22	139.70
11	69.85	23	146.05
12	76.20	24	152.40
13	82.55		

To convert to inches, divide by 25.4

Part Numbering System

Series **# of Poles**

E M 9 1 2 6 ☐☐

02 to **24**

EM9127 Series
Euro-Mag Terminal Blocks
7.50 Centers; Modular

EM912705

SPECIFICATIONS
Rating: 30A, 300V
Center Spacing: 0.29" (7.50mm)
Wire Range: #10-24 AWG
Housing Material: UL rated 94V0 Thermoplastic
Contact Material: Brass Tin-Plated
Cage Clamp: Brass, Nickel-Plated
Screw Size: M3.5 Steel Nickel-Plated
Operating Temperature: 105°C (221°F) max., -40°C (-40°F) min.
Torque Rating: 5.5 lb-in.
Recommended PCB Hole Diameters: 0.071" (1.80mm)
Construction: Modular design features dovetails for interlocking to achieve longer lengths
Agency Information: File E62622; CE Certified

Poles	L (mm)	Poles	L (mm)
2	15.0	14	105.0
3	22.5	15	112.5
4	30.0	16	120.0
5	37.5	17	127.5
6	45.0	18	135.0
7	52.5	19	142.5
8	60.0	20	150.0
9	67.5	21	157.5
10	75.0	22	165.0
11	82.5	23	172.5
12	90.0	24	180.0
13	97.5		

To convert to inches, divide by 25.4

Dimensions - mm (in)

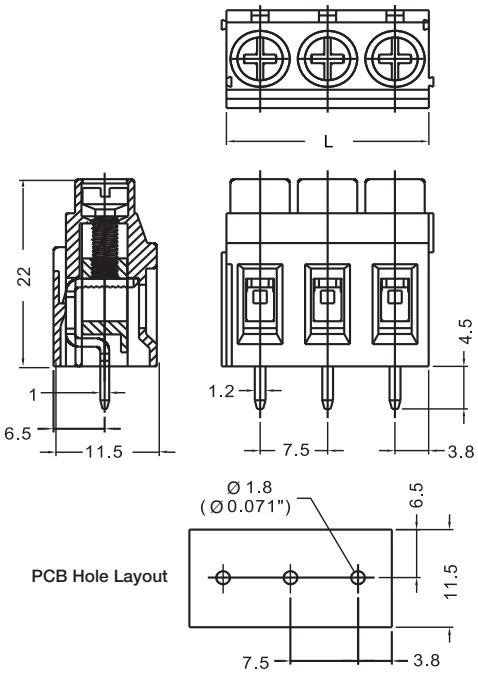

Part Numbering System

Series **# of Poles**

E M 9 1 2 7 ☐☐

02 to **24**

EM9128 Series
Euro-Mag Terminal Blocks
7.62 Centers; Modular

EM912805

SPECIFICATIONS
Rating: 30A, 300V
Center Spacing: 0.30″ (7.62mm)
Wire Range: #10-24 AWG
Housing Material: UL rated 94V0 Thermoplastic
Contact Material: Brass Tin-Plated
Cage Clamp: Brass, Nickel-Plated
Screw Size: M3.0 Steel Nickel-Plated
Operating Temperature: 105°C (221°F) max., -40°C (-40°F) min.
Torque Rating: 5.5 lb-in.
Recommended PCB Hole Diameters: 0.071" (1.80mm)
Construction: Modular design features dovetails for interlocking to achieve longer lengths
Agency Information: c UL us File E62622; CE Certified

Poles	L (mm)	Poles	L (mm)
2	15.24	14	106.68
3	22.86	15	114.30
4	30.48	16	121.92
5	38.10	17	129.54
6	45.72	18	137.16
7	53.34	19	144.78
8	60.96	20	152.40
9	68.58	21	160.02
10	76.20	22	167.64
11	83.82	23	175.26
12	91.44	24	182.88
13	99.06		

To convert to inches, divide by 25.4

Dimensions - mm (in)

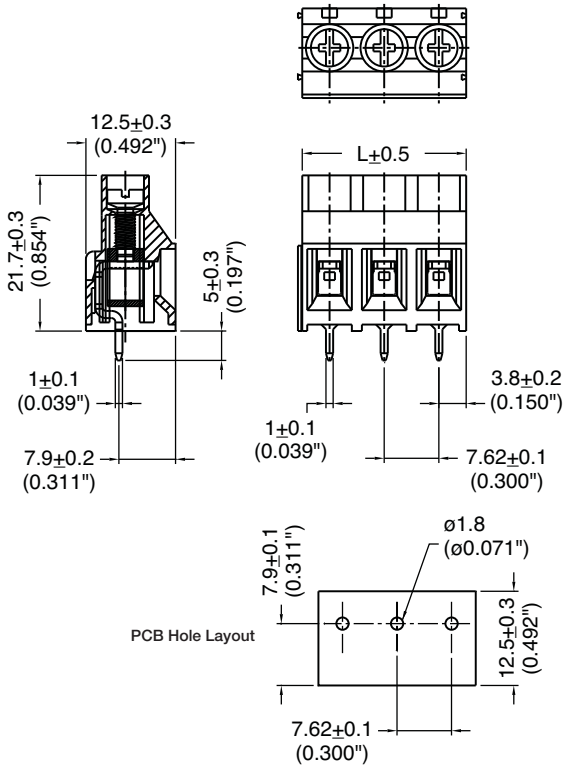

Part Numbering System

Series **# of Poles**

E M 9 1 2 7 ☐☐

02 to **24**

EM2909 Series
Euro-Mag Terminal Blocks
35° Angle; 9.52 Centers; Modular

EM290905

SPECIFICATIONS
Rating: 30A, 600V
Center Spacing: 0.375" (9.52mm)
Wire Range: #10-20 AWG
Housing Material: UL rated 94V0 Thermoplastic
Contact Material: Brass Tin-Plated
Cage Clamp: Steel, Nickel-Plated
Screw Size: M3.0 Nickel-Plated Steel
Operating Temperature: 105°C (221°F) max., -40°C (-40°F) min.
Torque Rating: 5.5 lb-in.
Recommended PCB Hole Diameters: 0.055" (1.40mm)
Construction: Modular design features dovetails for interlocking to achieve longer lengths
Agency Information: c UL us File E62622; CE Certified

Dimensions - mm (in)

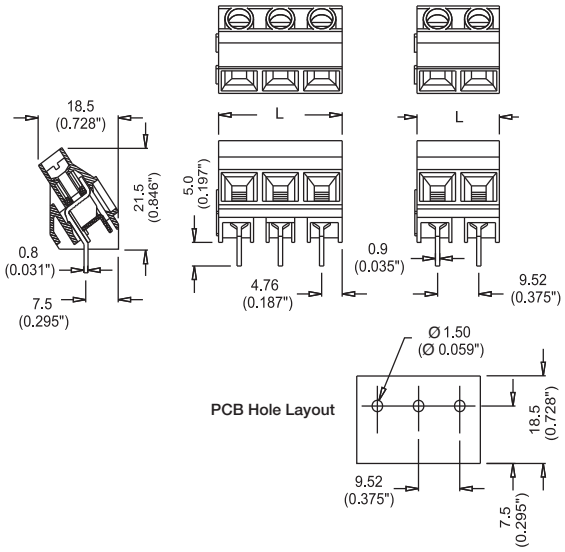

Poles	L (mm)	Poles	L (mm)
2	19.04	14	133.28
3	28.56	15	142.80
4	38.08	16	152.32
5	47.60	17	161.84
6	57.12	18	171.36
7	66.64	19	180.88
8	76.16	20	190.40
9	85.68	21	199.92
10	95.20	22	209.44
11	104.72	23	218.96
12	114.24	24	228.48
13	123.76		

To convert to inches, divide by 25.4

Part Numbering System

Series

E M 2 9 0 9

# of Poles

☐☐

02 to **24**

EM2919 Series
Euro-Mag Terminal Blocks
9.52 Centers; Modular

EM291905

SPECIFICATIONS
Rating: 30A, 600V
Center Spacing: 0.375” (9.52mm)
Wire Range: #10-20 AWG
Housing Material: UL rated 94V0 Thermoplastic
Contact Material: Brass Tin-Plated
Cage Clamp: Steel, Nickel-Plated
Screw Size: M3.0 Nickel-Plated Steel
Operating Temperature: 105°C (221°F) max., -40°C (-40°F) min.
Torque Rating: 5.5 lb-in.
Recommended PCB Hole Diameters: 0.055" (1.40mm)
Construction: Modular design features dovetails for interlocking to achieve longer lengths
Agency Information: c UL us File E62622; CE Certified

Dimensions - mm (in)

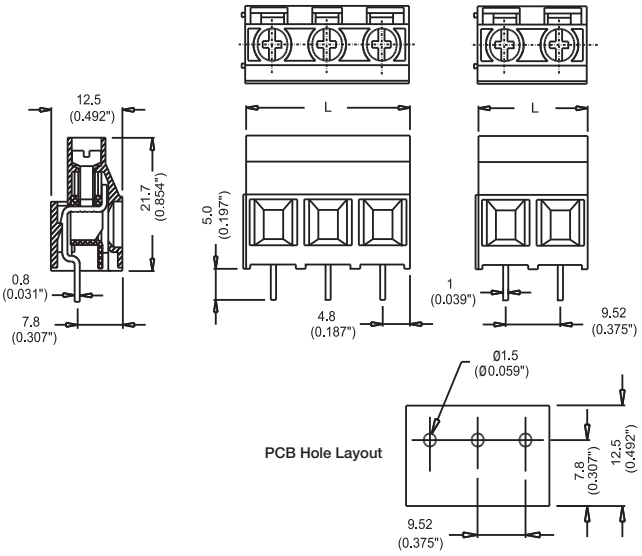

Poles	L (mm)	Poles	L (mm)
2	19.04	14	133.28
3	28.56	15	142.80
4	38.08	16	152.32
5	47.60	17	161.84
6	57.12	18	171.36
7	66.64	19	180.88
8	76.16	20	190.40
9	85.68	21	199.92
10	95.20	22	209.44
11	104.72	23	218.96
12	114.24	24	228.48
13	123.76		

To convert to inches, divide by 25.4

Part Numbering System

Series **# of Poles**

E M 2 9 1 9 ☐☐

02 to **24**

EM2929 Series
Euro-Mag Terminal Blocks
Hi-Current; 10.16 Centers

EM292908

SPECIFICATIONS
Rating: 65A, 600V
Center Spacing: 0.40” (10.16mm)
Wire Range: #6-20 AWG
Housing Material: UL rated 94V0 Thermoplastic
Contact Material: Tin-Plated Copper
Cage Clamp: Steel, Chromate Plated
Screw Size: M4 Stainless Steel
Operating Temperature: 105°C (221°F) max., -40°C (-40°F) min.
Torque Rating: 15 lb-in.
Recommended PCB Hole Diameters: 0.055" (1.40mm)
Construction: Mold to length
Agency Information: c UL us File E62622; CE Certified

Poles	L (mm)
2	20.34
3	30.50
4	40.66
5	50.82
6	60.98
7	71.14
8	81.30

To convert to inches, divide by 25.4

Dimensions - mm (in)

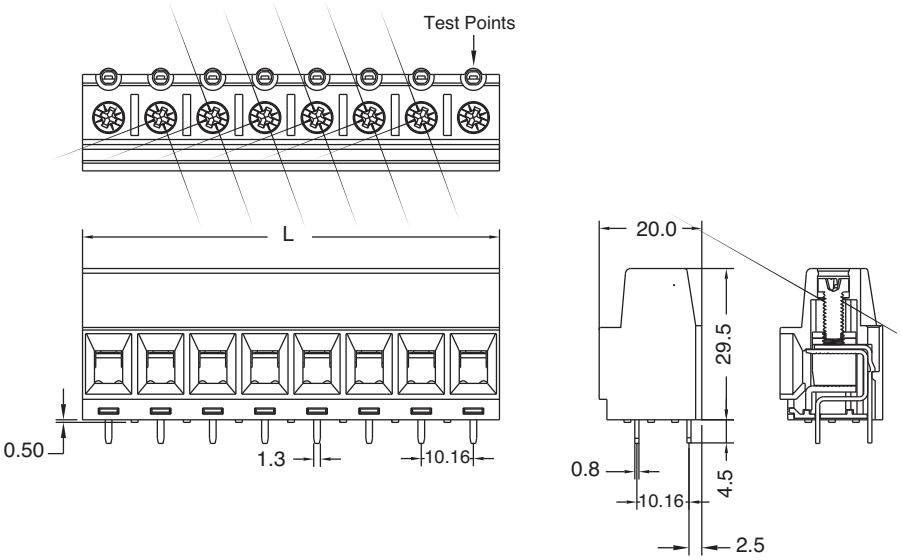

Part Numbering System

Series

E M 2 9 2 9

# of Poles

_ _

02 to **08**

EM2939 Series
Euro-Mag Terminal Blocks
Hi-Current, 15.00 Centers

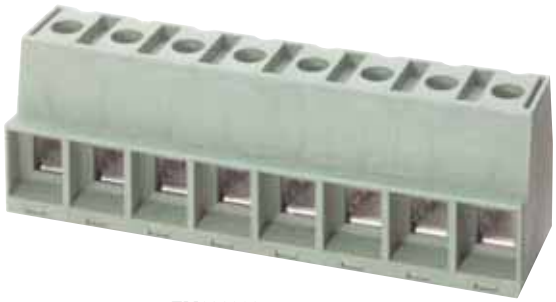

EM293908

SPECIFICATIONS
Rating: 115A, 600V with No Bottom Cover (NC) Option.
Center Spacing: 0.591" (15.00mm)
Wire Range: #2-20 AWG
Housing Material: UL rated 94V0 Thermoplastic
Contact Material: Tin-Plated Copper
Cage Clamp: Steel, Chromate-Plated
Screw Size: M5 Stainless Steel
Operating Temperature: 105°C (221°F) max., -40°C (-40°F) min.
Torque Rating: 15 lb-in.
Recommended PCB Hole Diameters: 0.063" (1.60mm)
Construction: Mold to length
Agency Information: c UL us File E62622; CE Certified

Poles	L (mm)
2	30.0
3	45.0
4	60.0
5	75.0
6	90.0
7	105.0
8	120.0

To convert to inches, divide by 25.4

Dimensions - mm (in)

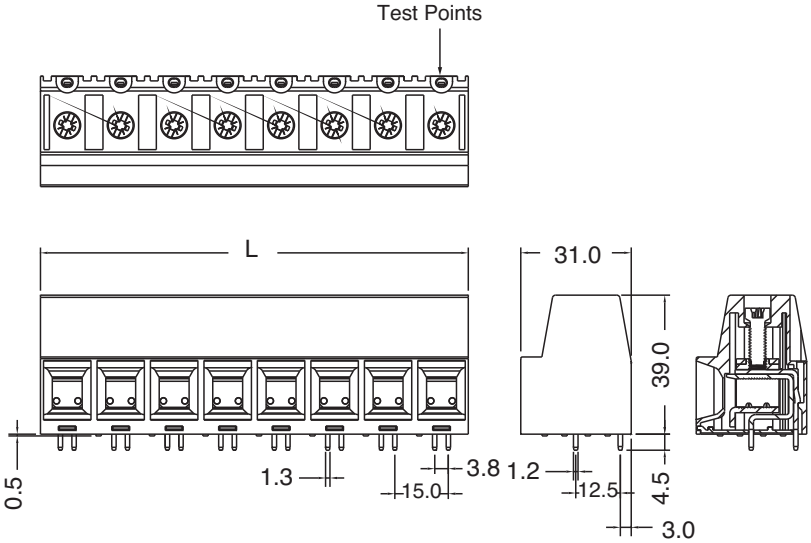

Part Numbering System

Series	# of Poles	Bottom Cover Option
EM2939	☐☐	(☐☐)
	02 to 08	N C

*NC = No Bottom Cover

EM3905 Series
Euro-Mag Terminal Blocks
High Current; Two Tier; 5.00 Centers; Modular

EM390508

EM390504

SPECIFICATIONS
Rating: 28A, 250V
Center Spacing: 0.197" (5.00mm)
Wire Range: #12-24 AWG
Housing Material: UL rated 94V0 Thermoplastic
Contact Material: Tin-Plated Brass
Cage Clamp: Brass, Nickel-Plated
Screw Size: M2.6 Nickel-Plated Steel
Operating Temperature: 105°C (221°F) max., -40°C (-40°F) min.
Torque Rating: 4.5 lb-in.
Recommended PCB Hole Diameters: 0.055" (1.40mm)
Construction: Modular design features dovetails for interlocking to achieve longer lengths
Agency Information: c UL us File E62622; CE Certified

Poles	L (mm)	Poles	L (mm)
2	12.5	14	72.5
3	17.5	15	77.5
4	22.5	16	82.5
5	27.5	17	87.5
6	32.5	18	92.5
7	37.5	19	97.5
8	42.5	20	102.5
9	47.5	21	107.5
10	52.5	22	112.4
11	57.5	23	117.5
12	62.5	24	122.5
13	67.5		

To convert to inches, divide by 25.4

Dimensions - mm (in)

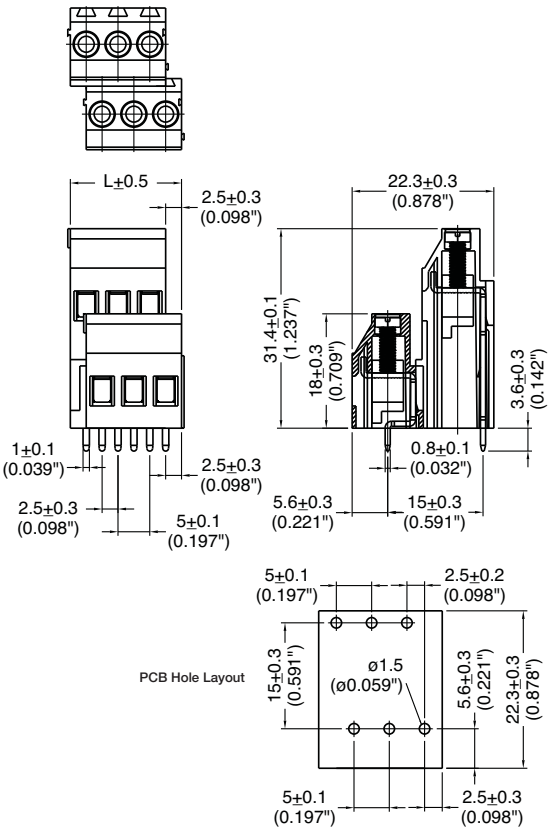

Part Numbering System

Series **# of Poles**

EM3905 ☐☐

02 to **24**

EM3908 Series
Euro-Mag Terminal Blocks
High Current; Two-Tier; 5.08 Centers; Modular

SPECIFICATIONS
Rating: 28A, 250V
Center Spacing: 0.20” (5.08mm)
Wire Range: #12-24 AWG
Housing Material: UL rated 94V0 Thermoplastic
Contact Material: Brass Tin-Plated
Cage Clamp: Brass, Nickel-Plated
Screw Size: M2.6 Nickel-Plated Steel
Operating Temperature: 105°C (221°F) max., -40°C (-40°F) min.
Torque Rating: 4.5 lb-in.
Recommended PCB Hole Diameters: 0.055" (1.40mm)
Construction: Modular design features dovetails for interlocking to achieve longer lengths
Agency Information: c UL us File E62622; CE Certified

Poles	L (mm)	Poles	L (mm)
2	10.16	14	71.12
3	15.24	15	76.20
4	20.32	16	81.28
5	25.40	17	86.36
6	30.48	18	91.44
7	35.56	19	96.52
8	40.64	20	101.60
9	45.72	21	106.68
10	50.80	22	111.76
11	55.88	23	116.84
12	60.96	24	121.92
13	66.04		

To convert to inches, divide by 25.4

Dimensions - mm (in)

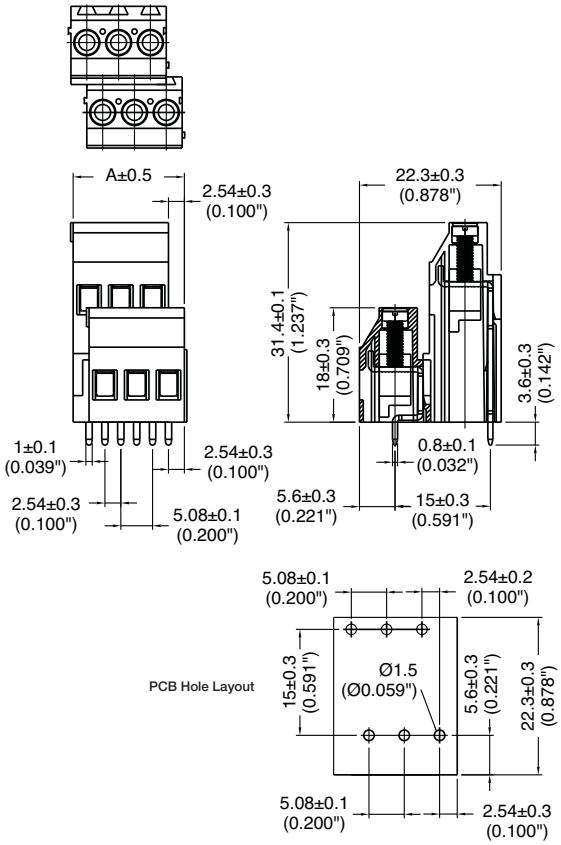

Part Numbering System

Series **# of Poles**

EM3908 ☐☐

02 to **24**

EM2742 Series
Euro-Mag Terminal Blocks
Screwless; 2.54 Centers

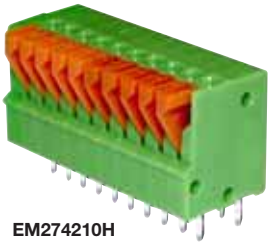
EM274210H

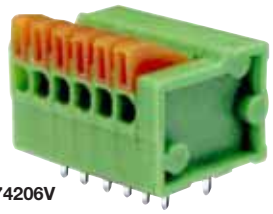
EM274206V

SPECIFICATIONS
Rating: 6A, 63V
Center Spacing: 0.10" (25.4mm)
Wire Range: #20-26 AWG
Housing Material: UL rated 94V0 Thermoplastic
Contact Material: Tin-Plated Brass
Spring Material: Stainless Steel
Operating Temperature: 105°C (221°F) max., -40°C (-40°F) min.
Recommended PCB Hole Diameters: 0.051" (1.30mm)
Construction: Mold-to-Length
Agency Information: c UL us File E62622; CE Certified

Poles	L (mm)	Poles	L (mm)
2	8.08	10	30.94
3	10.62	11	33.48
4	13.16	12	36.02
5	15.70	13	38.56
6	18.24	14	41.10
7	33.48	15	43.64
8	30.94	16	46.18
9	28.40		

To convert to inches, divide by 25.4

Dimensions - mm (in)

VERTICAL

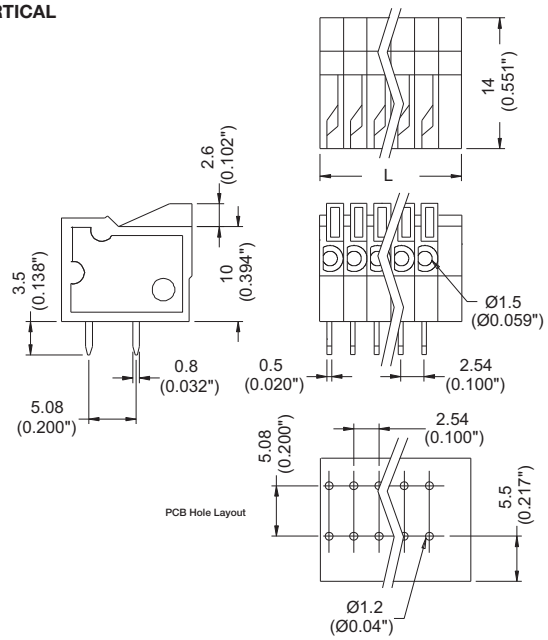

HORIZONTAL

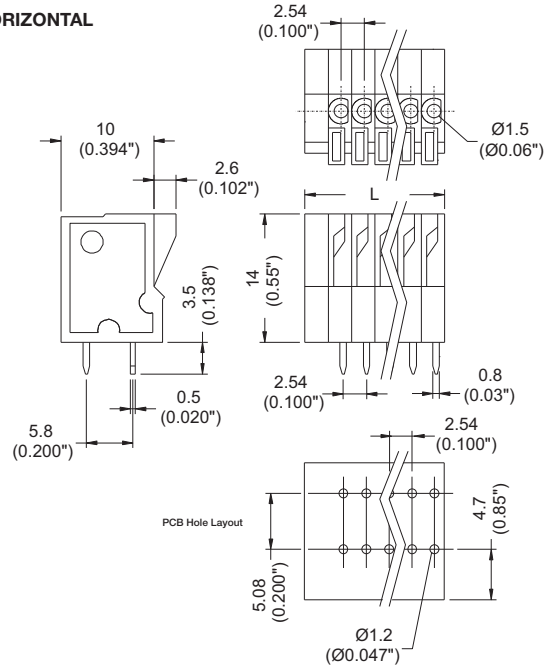

Part Numbering System

Series	# of Poles	Orientation
EM2742	☐☐	☐
	02 to **16**	**H** - horizontal **V** - vertical

EM2783 Series
Euro-Mag Terminal Blocks
45° Entry; Screwless; 3.50 Centers

EM278305

SPECIFICATIONS
Rating: 2A, 300V
Center Spacing: 0.136" (3.50mm)
Wire Range: #16-20 AWG
Housing Material: UL rated 94V0 Thermoplastic
Contact Material: Tin Plated Phos Bronze
Operating Temperature: 105°C (221°F) max., -40°C (-40°F) min.
Recommended PCB Hole Diameters: 0.051" (1.30mm)
Construction: Mold-to-Length
Agency Information: c UL us File E62622; CE Certified

Dimensions - mm (in)

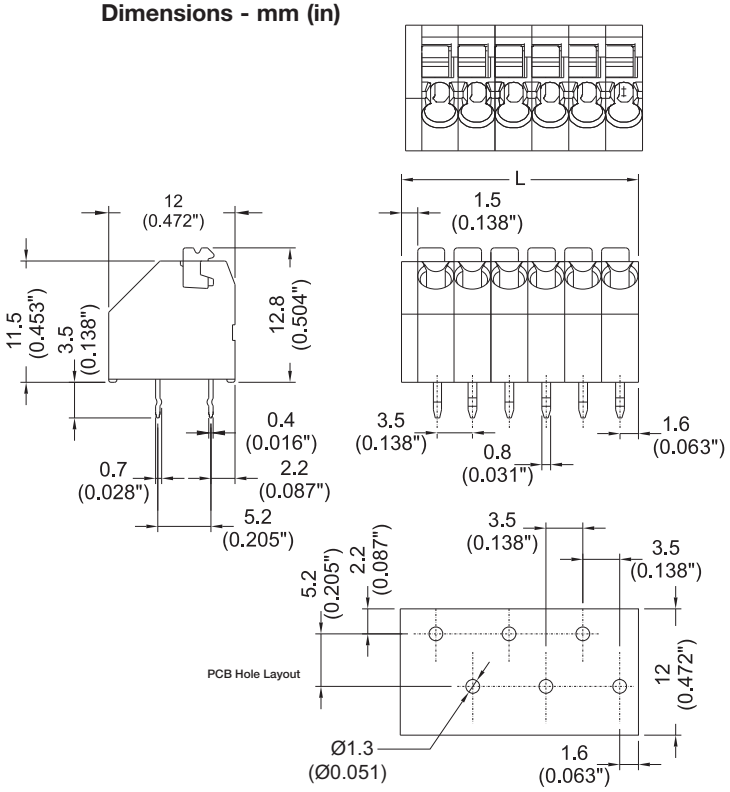

Poles	L (mm)
2	8.5
4	15.5
6	22.5
8	29.5
10	36.5
12	43.5
14	50.5
16	57.5
18	64.5
20	71.5
22	78.5
24	92.5

To convert to inches, divide by 25.4

Part Numbering System

Series	# of Poles
EM2783	☐☐
	02 to **24**

EM2802 Series
Euro-Mag Terminal Blocks
30° Entry; Screwless; 2.54 Centers

EM280207

SPECIFICATIONS
Rating: 4A, 125V
Center Spacing: 0.10" (2.54mm)
Wire Range: #20-24 AWG
Housing Material: Gray Polyamide Type 6/6, 94V0
Contact Material: Tin-Plated Brass
Spring Material: Stainless Steel
Operating Temperature: 105°C (221°F) max., -40°C (-40°F) min.
Recommended PCB Hole Diameters: 0.051" (1.30mm)
Construction: Mold-to-Length
Agency Information: c UL us File E62622; CE Certified

Poles	L (mm)
2	7.08
3	9.62
4	12.16
5	14.70
6	17.24
7	19.78
8	22.32
9	24.86
10	27.40
11	29.94
12	32.48

To convert to inches, divide by 25.4

Dimensions - mm (in)

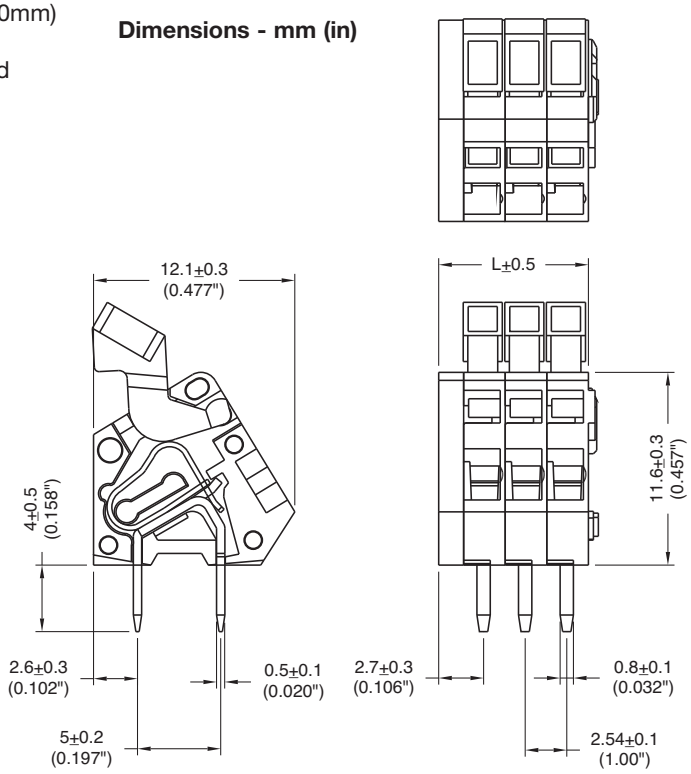

Part Numbering System

Series

EM2802

# of Poles

□□

02 to **12**

EM2785 Series
Euro-Mag Terminal Blocks
45° Entry; Screwless; Modular; 5.00 Centers

EM278505

SPECIFICATIONS
Rating: 7A, 300V
Center Spacing: 0.197" (5.00mm)
Wire Range: #16-22 AWG
Housing Material: UL rated 94V0 Thermoplastic
Contact Material: Tin-Plated Brass
Spring Material: Stainless Steel
Operating Temperature: 105°C (221°F) max., -40°C (-40°F) min.
Recommended PCB Hole Diameters: 0.051" (1.30mm)
Construction: Modular design features dovetails for interlocking to achieve longer lengths
Agency Information: c UL us File E62622; CE Certified

Dimensions - mm (in)

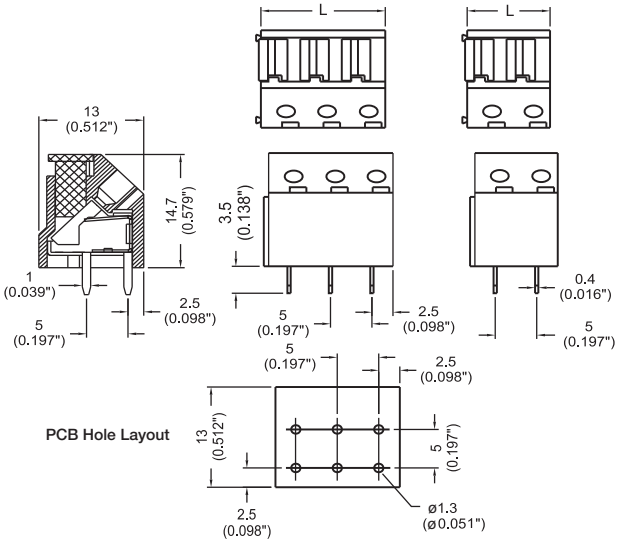

Poles	L (mm)	Poles	L (mm)
2	10.0	14	70.0
3	15.0	15	75.0
4	20.0	16	80.0
5	25.0	17	85.0
6	30.0	18	90.0
7	35.0	19	95.0
8	40.0	20	100.0
9	45.0	21	105.0
10	50.0	22	110.0
11	55.0	23	115.0
12	60.0	24	120.0
13	65.0		

To convert to inches, divide by 25.4

Part Numbering System

Series **# of Poles**

E M 2 7 8 5 ☐☐

02 to **24**

EM2778 Series
Euro-Mag Terminal Blocks
Screwless, Modular, 5.08 Centers

EM277805

SPECIFICATIONS
Rating: 10A, 250V
Center Spacing: 0.20" (5.08mm)
Wire Size: #14-24 AWG
Housing Material: UL rated 94V0 Thermoplastic
Contact Material: Tin-Plated Brass
Operating Temperature: 105°C (221°F) max., -40°C (-40°F) min.
Recommended PCB Hole Diameters: 0.051" (1.30mm)
Construction: Modular design features dovetails for interlocking to achieve longer lengths
Agency Information: File E62622; CE Certified

Dimensions - mm (in)

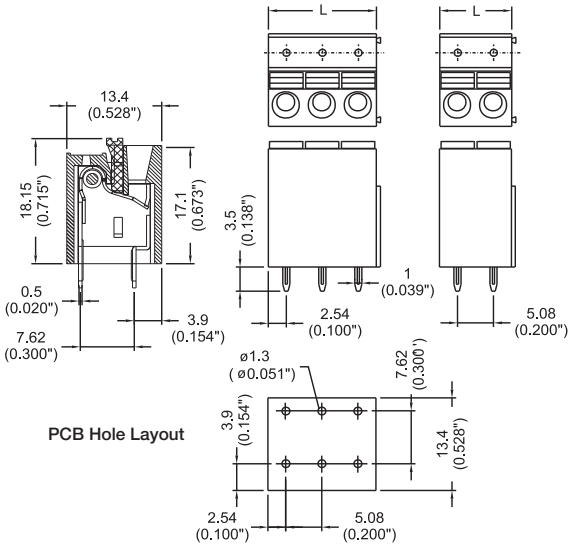

Poles	L (mm)	Poles	L (mm)
2	10.16	14	71.12
3	15.24	15	76.20
4	20.32	16	81.28
5	25.40	17	86.36
6	30.48	18	91.44
7	35.56	19	96.52
8	40.64	20	101.16
9	45.72	21	106.68
10	50.80	22	111.76
11	55.88	23	116.84
12	60.96	24	121.92
13	66.04		

To convert to inches, divide by 25.4

Part Numbering System

Series	# of Poles
EM2778	☐☐
	02 to **24**

EM2795 Series
Euro-Mag Terminal Blocks
Screwless; 5.08 Centers

EM279507H

EM279502V

SPECIFICATIONS
Rating: 10A, 300V
Center Spacing: 0.20" (5.08mm)
Wire Range: #14-24 AWG
Housing Material: UL rated 94V0 Thermoplastic
Contact Material: Tin-Plated Brass
Operating Temperature: 105°C (221°F) max., -40°C (-40°F) min.
Recommended PCB Hole Diameters: 0.051" (1.30mm)
Construction: Mold-to-Length
Agency Information: File E62622; CE Certified

Poles	L (mm)	Poles	L (mm)
2	12.70	10	68.58
3	17.78	11	73.66
4	22.86	12	78.74
5	27.94	13	83.82
6	33.02	14	53.34
7	38.10	15	58.42
8	43.18	16	63.50
9	48.26		

To convert to inches, divide by 25.4

Dimensions - mm (in)

VERTICAL

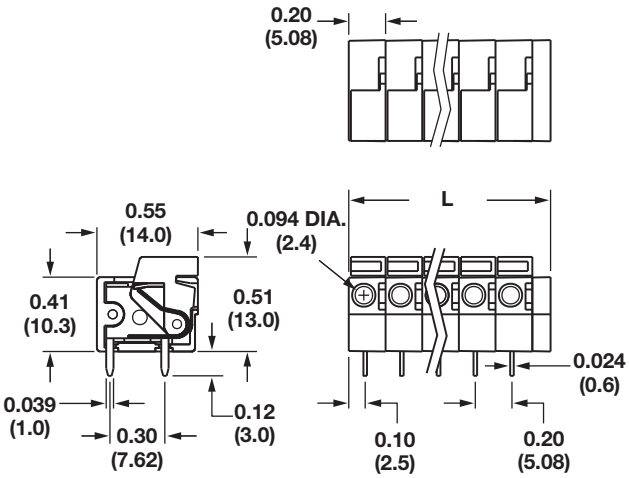

HORIZONTAL

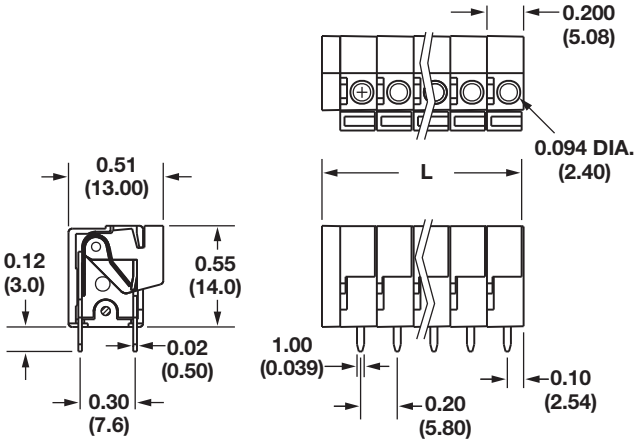

Part Numbering System

Series	# of Positions	Orientation
EM2795	☐☐	☐
	02 to **16**	**H** - horizontal **V** - vertical

EM2796 Series
Euro-Mag Terminal Blocks
Screwless; 7.62 Centers

EM279606V

EM279603H

SPECIFICATIONS
Rating: 10A, 300V
Center Spacing: 0.30" (7.62mm)
Wire Range: #14-24 AWG
Housing Material: UL rated 94V0 Thermoplastic
Contact Material: Tin-Plated Brass
Operating Temperature: 105°C (221°F) max., -40°C (-40°F) min.
Recommended PCB Hole Diameters: 0.051" (1.30mm)
Construction: Mold-to-Length
Agency Information: c UL us File E62622; CE Certified

Poles	L (mm)	Poles	L (mm)
2	15.24	10	76.20
3	22.56	11	83.82
4	30.48	12	91.44
5	37,19	13	99.07
6	45.72	14	106.69
7	53.34	15	114.31
8	60.96	16	121.93
9	68.58		

To convert to inches, divide by 25.4

Dimensions - mm (in)

VERTICAL

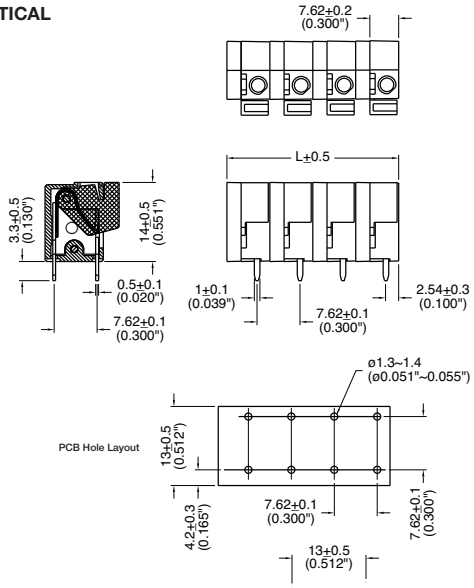

HORIZONTAL

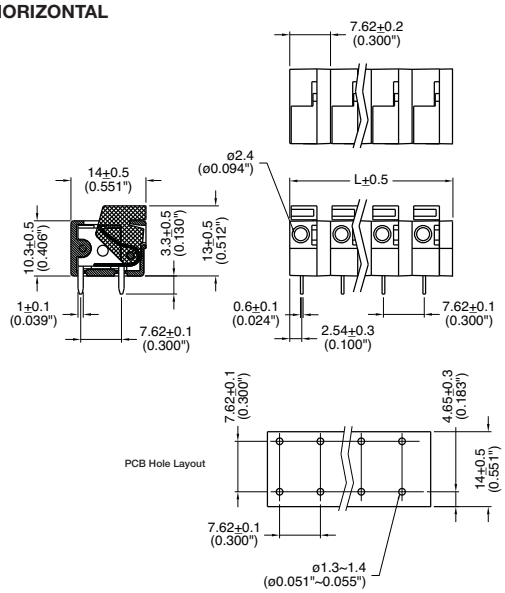

Part Numbering System

Series	# of Poles	Orientation
EM2796	☐☐	☐
	02 to **16**	**H** - horizontal **V** - vertical

EM2791 Series
Euro-Mag Terminal Blocks
Screwless; 10.16 Centers

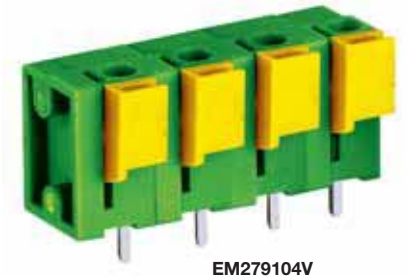

EM279104V

SPECIFICATIONS
Rating: 10A, 300V
Center Spacing: 0.40" (10.16mm)
Wire Range: #14-24 AWG
Housing Material: UL rated 94V0 Thermoplastic
Contact Material: Tin-Plated Brass
Operating Temperature: 105°C (221°F) max., -40°C (-40°F) min.
Recommended PCB Hole Diameters: 0.051" (1.30mm)
Construction: Mold-to-Length
Agency Information: c UL us File E62622; CE Certified

Poles	L (mm)	Poles	L (mm)
2	17.78	10	99.06
3	27.94	11	109.22
4	38.10	12	119.38
5	48.26	13	129.54
6	58.42	14	139.70
7	68.58	15	149.86
8	78.74	16	160.02
9	88.90		

To convert to inches, divide by 25.4

Dimensions - mm (in)

VERTICAL

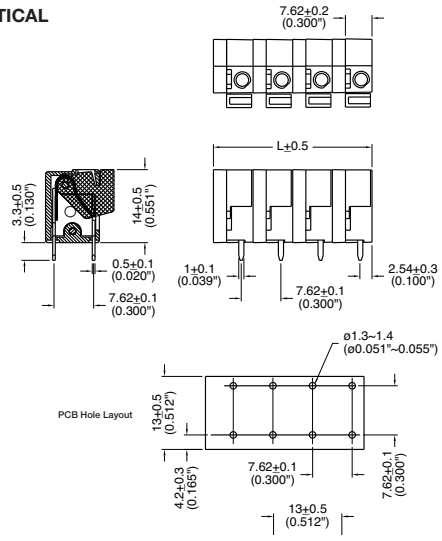

HORIZONTAL

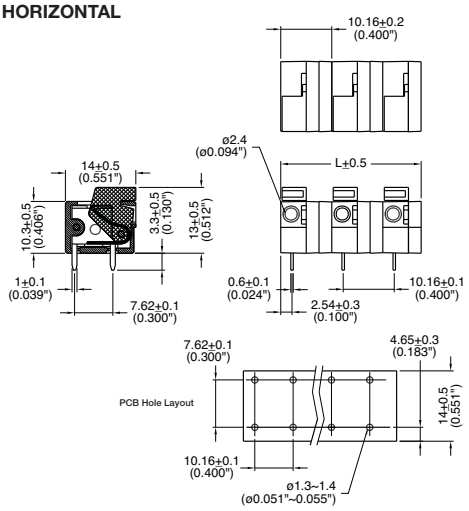

Part Numbering System

Series	# of Poles	Orientation
EM2791	☐☐	☐
	02 to **16**	**H** - horizontal **V** - vertical

EM2816 Series
Euro-Mag Terminal Blocks

60° Entry; Screwless; 7.62 Centers

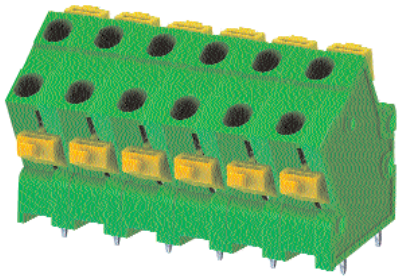

EM281606

SPECIFICATIONS

Rating: 10A, 300V
Center Spacing: 0.30" (7.62mm)
Wire Range: #16-22 AWG
Housing Material: UL rated 94V0 Thermoplastic
Contact Material: Tin-Plated Brass
Spring Material: Stainless Steel
Operating Temperature: 105°C (221°F) max., -40°C (-40°F) min.
Recommended PCB Hole Diameters: 0.051" (1.30mm)
Construction: Mold-to-Length
Agency Information: c UL us File E62622; CE Certified

Poles	L (mm)
2	15.24
3	22.86
4	30.48
5	38.10
6	45.72
7	53.34
8	60,96
9	68.58
10	76.20
11	83.82
12	91.44

To convert to inches, divide by 25.4

Dimensions - mm (in)

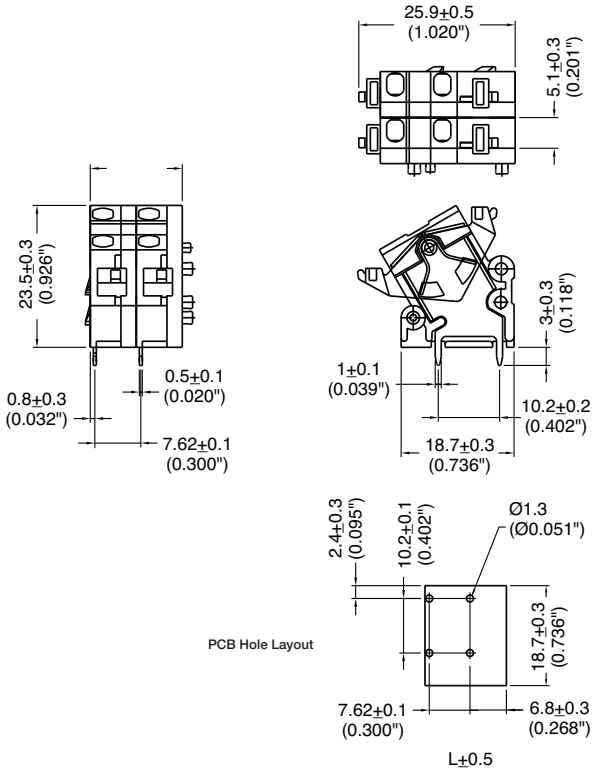

Part Numbering System

Series

E M 2 8 1 6

# of Poles

□□

02 to **12**

EM3533 Series
Euro-Mag Terminal Blocks

Pluggable Block (Mates with EM2221 Series); 3.50 Centers

EM353308

SPECIFICATIONS
Rating: 8A, 300V
Center Spacing: 0.138” (3.50mm)
Wire Range: #16-26 AWG
Housing Material: UL rated 94V0 Thermoplastic
Contact Material: Brass Tin-Plated
Cage Clamp: Brass, Nickel-Plated
Screw Size: M2.0 Nickel-Plated Steel
Operating Temperature: 105°C (221°F) max., -40°C (-40°F) min.
Torque Rating: 2.5 lb-in.
Construction: Mold-to-Length
Agency Information: c UL us File E62622; CE Certified

Poles	L (mm)
2	7.8
3	11.3
4	14.8
5	18.3
6	21.8
7	25.3
8	28.8
9	32.3
10	35.8
11	33.3
12	42.8
13	46.3
14	49.8

To convert to inches, divide by 25.4

Dimensions - mm (in)

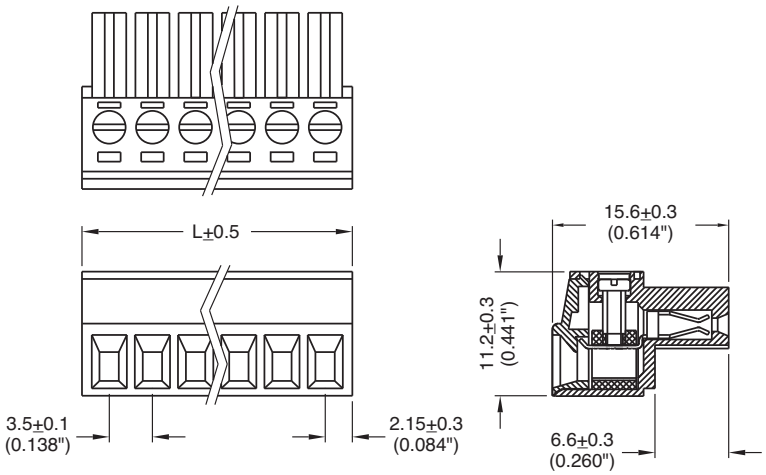

Part Numbering System

Series	# of Poles
EM3533	☐☐
	02 to **14**

EM2221 Series
Euro-Mag Terminal Blocks

Closed Header; (Mates with EM3553 Series); 3.50 Centers

EM222112H

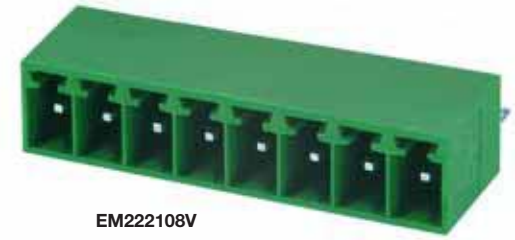

EM222108V

SPECIFICATIONS
Rating: 8A, 300V
Center Spacing: 0.138" (3.50mm)
Housing Material: UL rated 94V0 Thermoplastic
Contact Material: Brass Tin-Plated
Operating Temperature: 105°C (221°F) max., -40°C (-40°F) min.
Recommended PCB Hole Diameters: 0.055" (1.40mm)
Construction: Mold-to-Length
Agency Information: c UL us File E62622; CE Certified

Poles	L (mm)
2	7.6
3	11.1
4	14.6
5	18.1
6	21.6
7	25.1
8	28.6
9	32.1
10	35.6
11	39.1
12	42.6
13	42.1
14	49.6

To convert to inches, divide by 25.4

Dimensions - mm (in)

HORIZONTAL

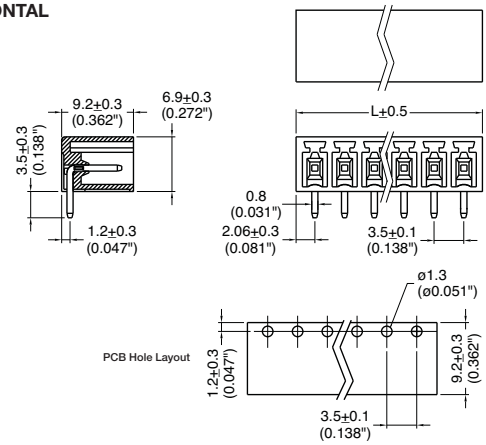

VERTICAL

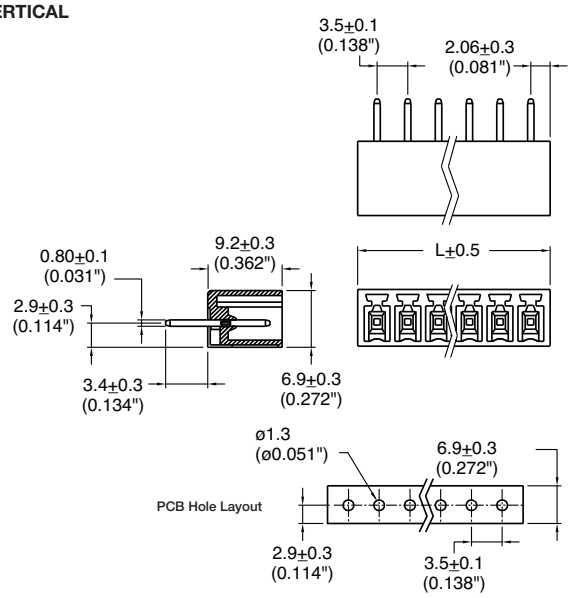

Part Numbering System

Series	# of Poles	Orientation
E M 2 2 2 1	☐☐	☐
	02 to **14**	**H** - horizontal **V** - vertical

EM2413 Series
Euro-Mag Terminal Blocks

Pluggable Block with Flanges (Mates with EM2201 Series); 3.50 Centers

EM241307

SPECIFICATIONS
Rating: 8A, 300V
Center Spacing: 0.138" (3.50mm)
Wire Range: #16-26 AWG
Housing Material: UL rated 94V0 Thermoplastic
Contact Material: Brass Tin-Plated
Cage Clamp: Brass, Nickel-Plated
Screw Size: M2.0 Nickel-Plated Steel
Operating Temperature: 105°C (221°F) max., -40°C (-40°F) min.
Torque Rating: 2.5 lb-in.
Construction: Mold-to-Length
Agency Information: c UL us File E62622; CE Certified

Dimensions - mm (in)

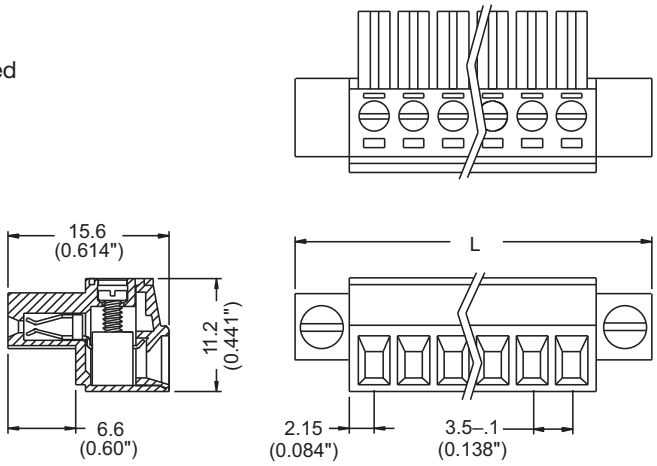

Poles	L (mm)
2	17.4
3	20.9
4	24.4
5	27.9
6	31.4
7	34.9
8	38.4
9	41.9
10	45.4
11	48.9
12	52.4

To convert to inches, divide by 25.4

Part Numbering System

Series	# of Poles
EM2413	☐☐
	02 to **12**

EM2201 Series
Euro-Mag Terminal Blocks

Header with Flanges (Mates with EM2413 Series); 3.50 Centers

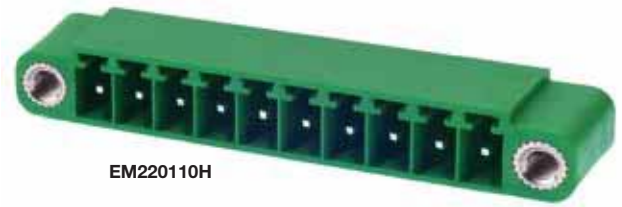

EM220110H

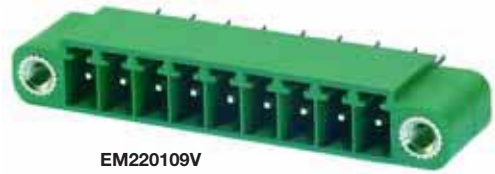

EM220109V

SPECIFICATIONS
Rating: 8A, 300V
Center Spacing: 0.138" (3.50mm)
Housing Material: Green Polyamide Type 6/6, 94V0
Contact Material: Brass Tin-Plated
Operating Temperature: 105°C (221°F) max., -40°C (-40°F) min.
Recommended PCB Hole Diameters: 0.055" (1.40mm)
Construction: Mold to Length
Agency Information: c UL us File E62622; CE Certified

Poles	L (mm)
2	17.4
3	20.9
4	24.4
5	27.9
6	31.4
7	34.9
8	38.4
9	41.3
10	45.4
11	48.9
12	52.4

To convert to inches, divide by 25.4

Dimensions - mm (in)

HORIZONTAL

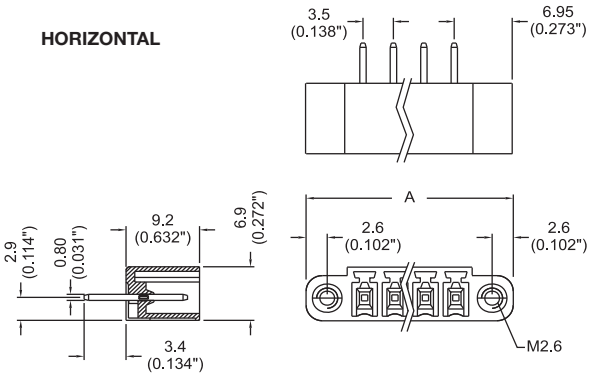

PCB Hole Layout

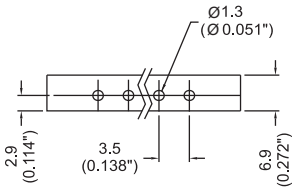

HORIZONTAL

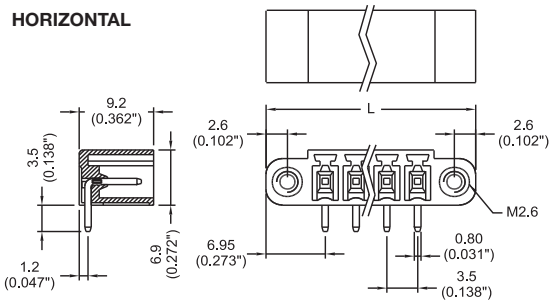

PCB Hole Layout

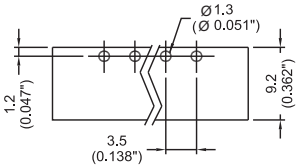

Part Numbering System

Series	# of Poles	Orientation
E M 2 2 0 1	☐☐	☐
	02 to **12**	**H** - horizontal **V** - vertical

EM3553 Series
Euro-Mag Terminal Blocks
(Mates with EM3593 Series);
3.81 Centers

EM355308

SPECIFICATIONS
Rating: 8A, 300V
Center Spacing: 0.15” (3.81mm)
Consult factory for 0.30” (7.62mm)
Wire Range: #18-20 AWG
Housing Material: UL rated 94V0 Thermoplastic
Contact Material: Brass Tin-Plated
Screw Size: M2x3 Zinc-Plated Steel
Operating Temperature: 105°C (221°F) max., -40°C (-40°F) min.
Torque Rating: 3.0 lb-in.
Construction: Mold-to-Length
Agency Information: c UL us File E62622; CE Certified

Position	L (mm)
02	7.90
03	11.71
04	15.52
05	19.33
06	23.14
07	26.95
08	30.76
09	34.57
10	38.38
11	42.19
12	46.00

To convert to inches, divide by 25.4

Dimensions - mm (in)

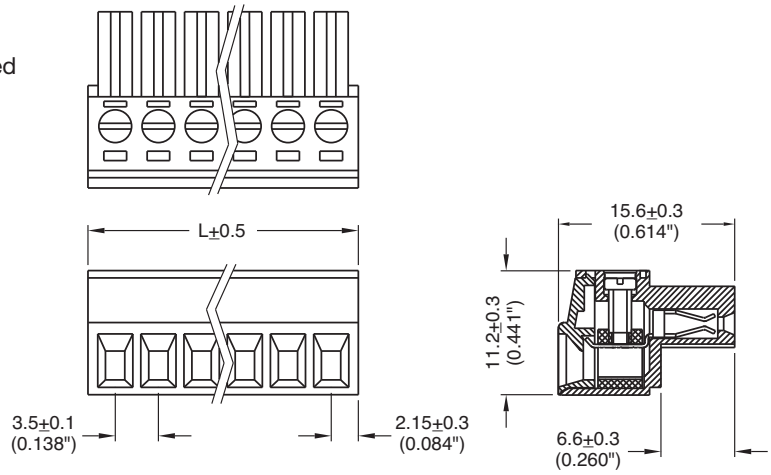

Part Numbering System

Series

EM3553

# of Positions

□□

02 to **12**

Mating Header: EM3593 pg. 90

EM3543 Series
Euro-Mag Terminal Blocks

Pluggable Block (Mates with EM3593 Series); 3.81 Centers

EM354309

SPECIFICATIONS

Rating: 8A, 300V
Center Spacing: 0.15" (3.81mm)
Consult factory for 0.30" (7.62mm)
Wire Range: #16-24 AWG
Housing Material: UL rated 94V0 Thermoplastic
Contact Material: Brass Tin-Plated
Cage Clamp: Brass, Nickel-Plated
Screw Size: M2.0 Zinc-Plated Steel
Operating Temperature: 105°C (221°F) max., -40°C (-40°F) min.
Torque Rating: 2.5 lb-in.
Construction: Mold-to-Length
Agency Information: c UL us File E62622; CE Certified

Poles	L (mm)
2	8.41
3	12.22
4	16.03
5	19.84
6	23.65
7	27.46
8	31.27
9	35.08
10	38.89
11	42.70
12	46.51

To convert to inches, divide by 25.4

Dimensions - mm (in)

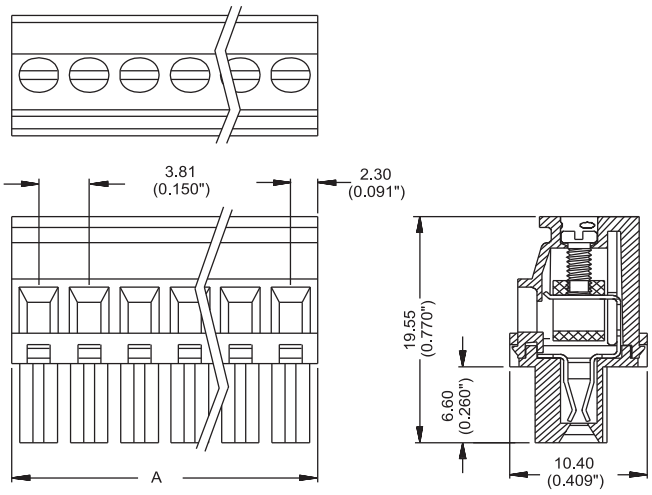

Part Numbering System

Series

E M 3 5 4 3

# of Poles

□□

02 to **12**

Mating Header: EM3593 pg. 90

Series EM3583
Euro-Mag Terminal Blocks
IDC Pluggable Block
(Mates with EM3593 Series); 3.81 Centers

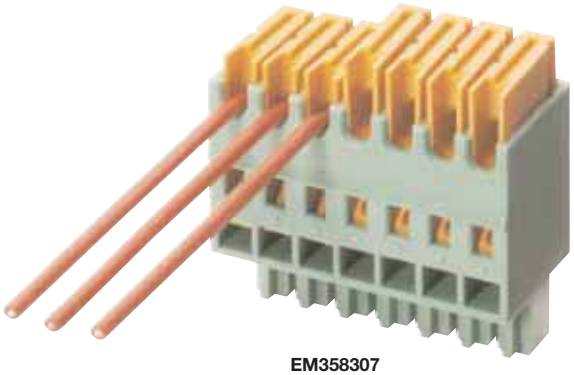

EM358307

SPECIFICATIONS
Ratings: 6A, 160V
Center Spacing: 0.15" (3.81mm)
Wire Range: #22-20 AWG
Housing Material: UL rated 94V0 Thermoplastic
Contact Material: Brass, Tin-Plated
Operating Temperature: 105°C (221°F) max., –49°C (–40°F) min.
Construction: Mold-to-length.
Agency Information: c UL us File E62622; CE Certified

Poles	L1 (mm)	L2 (mm)	Poles	L1 (mm)	L2 (mm)
02	3.81	8.40	08	26.67	31.26
03	7.62	12.21	09	30.48	35.07
04	11.43	16.02	10	34.29	38.88
05	15.24	19.83	11	38.10	42.69
06	19.05	23.64	12	41.91	46.50
07	22.86	27.45			

Dimensions - mm (in)

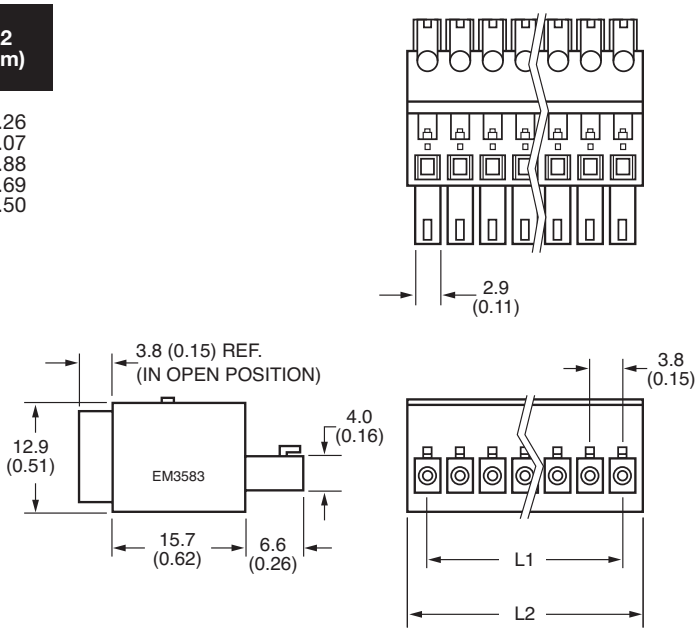

Part Numbering System

Inches (Millimeters)

Series

E M 3 5 8 3

# of Positions

☐☐

02 to **12**

Mating Header: EM3593 pg. 90

Terminal Blocks: Single & Double Row
EuroMag Series
Terminal Blocks: Base & Rail Mount
Power Distribution Blocks
Wire Management Products
Edge Connectors, One-Sided Boards
Compliance References

Series EM3593
Euro-Mag Terminal Blocks
Header (Mates with EM3553 Series); 3.81 Centers

EM359312HC

EM359308VC

SPECIFICATIONS
Ratings: 6A, 160V
Center Spacing: 0.15" (3.81mm)
Housing Material: UL rated 94V0 Thermoplastic
Contact Material: Brass, Tin-Plated
Operating Temperature: 105°C (221°F) max., –40°C (–40°F) min.
Recommended PCB Hole Diameters: 0.51" (1.30mm)
Construction: Mold-to-length.
Agency Information: c UL us File E62622; CE Certified

Poles	L (mm)	Poles	L (mm)
02			
03	8.23	08	31.09
04	12.04	09	34.90
05	15.85	10	38.71
06	19.66	11	42.52
07	23.47	12	46.33
	27.28		

* Dimensions in inches. To convert to millimeters, multiply by 25.4.

Dimensions - mm (in)

Horizontal

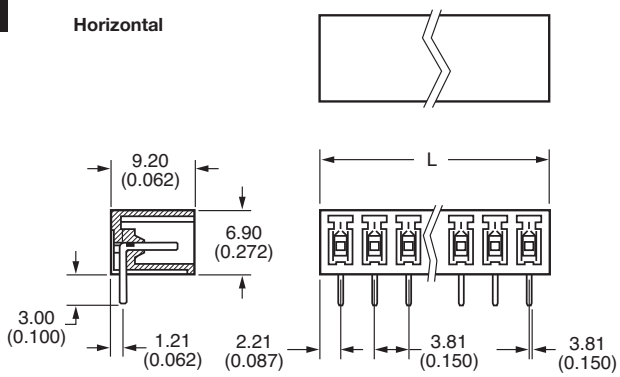

Vertical

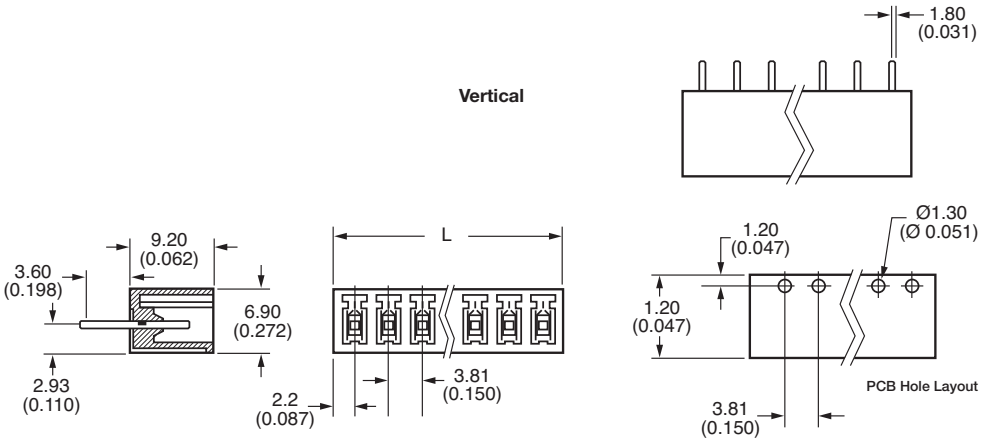

Part Numbering System

Inches (Millimeters)

Series	# of Positions	Orientation	Side Base
EM3593	☐☐	☐	C
	02 to **12**	**H** - Horizontal **V** - Vertical	**C** - Closed

Mating Plugs: EM3553 pg. 87
EM3543 pg. 88
EM3583 pg. 89

EM2423 Series
Euro-Mag Terminal Blocks

Pluggable Block with Flanges (Mates with EM2211 Series); 3.81 Centers

EM242307

SPECIFICATIONS
Rating: 8A, 300V
Center Spacing: 0.15” (3.81mm)
Wire Range: #16-26 AWG
Housing Material: UL rated 94V0 Thermoplastic
Contact Material: Brass Tin-Plated
Cage Clamp: Brass, Nickel-Plated
Screw Size: M2.0 Nickel-Plated Steel
Operating Temperature: 105°C (221°F) max., -40°C (-40°F) min.
Torque Rating: 2.5 lb-in.
Construction: Mold-to-Length
Agency Information: File E62622; CE Certified

Dimensions - mm (in)

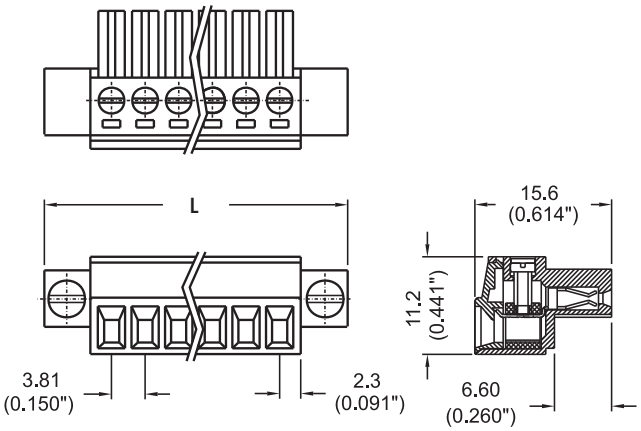

Poles	L (mm)
2	17.91
3	21.72
4	25.53
5	29.34
6	33.15
7	36.96
8	40.77
9	44.58
10	48.39
11	52.20
12	56.01

To convert to inches, divide by 25.4

Part Numbering System

Series

E M 2 4 2 3

# of Poles

☐☐

02 to **12**

Mating Header: EM2211 pg. 93

EM2443 Series
Euro-Mag Terminal Blocks

Pluggable Block with Flanges (Mates with EM2211 Series); 3.81 Centers

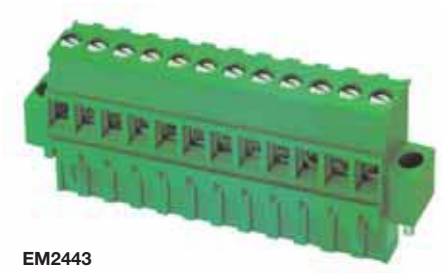

EM2443

SPECIFICATIONS

Rating: 10A, 300V
Center Spacing: 0.15" (3.81mm)
Consult factory for 0.30" (7.62mm)
Wire Range: #16-24 AWG
Housing Material: UL rated 94V0 Thermoplastic
Contact Material: Brass Tin-Plated
Cage Clamp: Brass, Nickel-Plated
Screw Size: M2.0 Nickel-Plated Steel
Operating Temperature: 105°C (221°F) max., -40°C (-40°F) min.
Torque Rating: 2.5 lb-in.
Construction: Mold-to-Length
Agency Information: c UL us File E62622; CE Certified

Dimensions - mm (in)

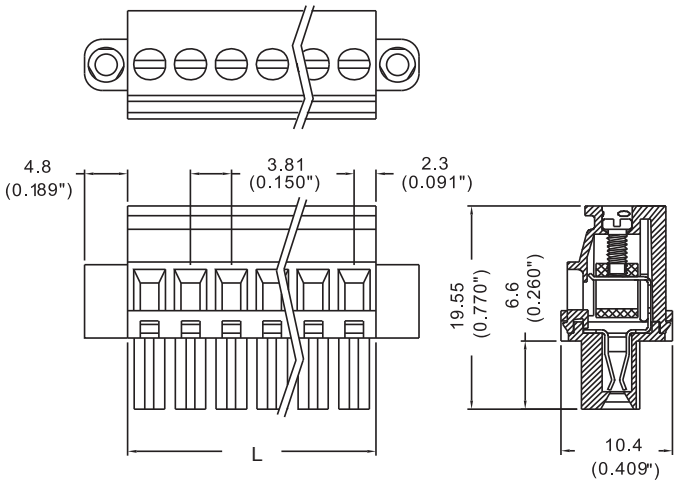

Poles	L (mm)
2	7.90
3	11.71
4	15.52
5	19.33
6	23.14
7	26.95
8	30.76
9	34.57
10	38.38
11	42.19
12	46.00

To convert to inches, divide by 25.4

Part Numbering System

Series

E M 2 4 4 3

# of Poles

☐☐

02 to **12**

Mating Header: EM2211 pg. 93

EM2211 Series
Euro-Mag Terminal Blocks

Header with Flanges (Mates with EM2423, EM2443 Series); 3.81 Centers

EM221106H

EM221109V

SPECIFICATIONS
Rating: 8A, 300V
Center Spacing: 0.15" (3.81mm)
Consult factory for 0.30" (7.62mm)
Housing Material: UL rated 94V0 Thermoplastic
Contact Material: Brass Tin-Plated
Operating Temperature: 105°C (221°F) max., -40°C (-40°F) min.
Recommended PCB Hole Diameters: 0.055" (1.40mm)
Construction: Mold to Length
Agency Information: c UL us File E62622; CE Certified

Poles	L (mm)
2	18.02
3	21.83
4	25.64
5	29.45
6	33.26
7	37.07
8	40.88
9	44.69
10	48.50
11	52.31
12	56.12
14	63.74

To convert to inches, divide by 25.4

Dimensions - mm (in)

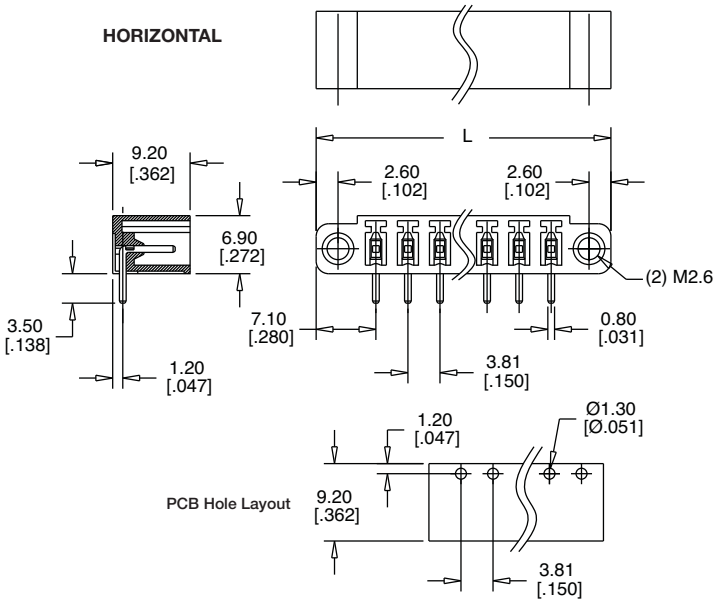

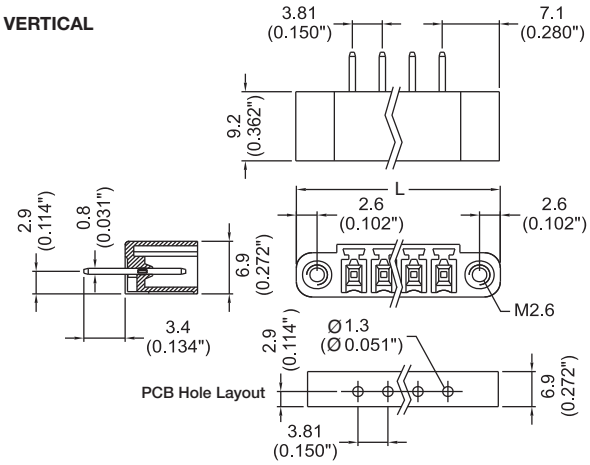

Part Numbering System

Series	# of Poles	Orientation
E M 2 2 1 1	☐☐	☐
	02 to **14**	**H** - horizontal **V** - vertical

Mating Plugs: EM2423 pg. 91
EM2443 pg. 92

EM2525 Series
Euro-Mag Terminal Blocks

Pluggable Block (Mates with EM2535 Series); 5.00 Centers

EM252503

SPECIFICATIONS
Rating: 16A, 300V
Center Spacing: 0.197" (5.00mm)
Consult factory for 0.394" (10.00mm)
Wire Range: #12-26 AWG
Housing Material: UL rated 94V0 Thermoplastic
Contact Material: Brass Tin-Plated
Screw Size: M3x5 Zinc-Plated Steel
Operating Temperature: 105°C (221°F) max., -40°C (-40°F) min.
Torque Rating: 7 lb-in.
Construction: Mold-to-Length
Connector Style: Rising Cage Clamp
Agency Information: c UL us File E62622; CE Certified

Poles	L (mm)	Poles	L (mm)
02	10.0	14	70.0
03	15.0	15	75.0
04	20.0	16	80.0
05	25.0	17	85.0
06	30.0	18	90.0
07	35.0	19	95.0
08	40.0	20	100.0
09	45.0	21	105.0
10	50.0	22	110.0
11	55.0	23	115.0
12	60.0	24	120.0
13	65.0		

To convert to inches, divide by 25.4

Dimensions - mm (in)

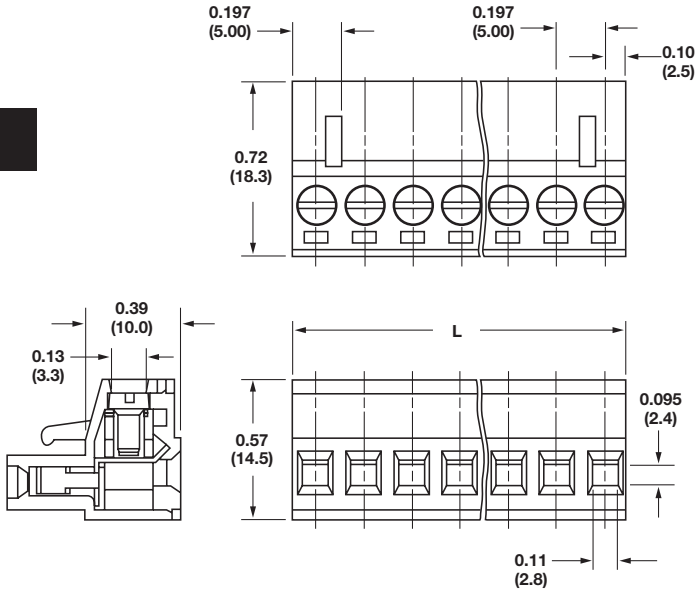

Part Numbering System

Series

EM2525

# of Positions

□□

02 to **24**

Mating Header: EM2535 pg. 97

EM2485 Series
Euro-Mag Terminal Blocks

Pluggable Block with Cover
(Mates with EM2535 Series); 5.00 Centers

EM248506

SPECIFICATIONS
Rating: 16A, 300V
Center Spacing: 0.197" (5.00mm)
Wire Range: #14-24 AWG
Housing Material: UL rated 94V0 Thermoplastic
Contact Material: Tin-Plated Phos Bronze
Cage Clamp: Brass, Nickel-Plated
Screw Size: M2.6 Nickel-Plated Steel
Operating Temperature: 105°C (221°F) max., -40°C (-40°F) min.
Torque Rating: 4.5 lb-in.
Construction: Mold-to-Length
Agency Information: c UL us File E62622; CE Certified

Poles	L (mm)
2	10.0
3	15.0
4	20.0
5	25.0
6	30.0
7	35.0
8	40.0

To convert to inches, divide by 25.4

Dimensions - mm (in)

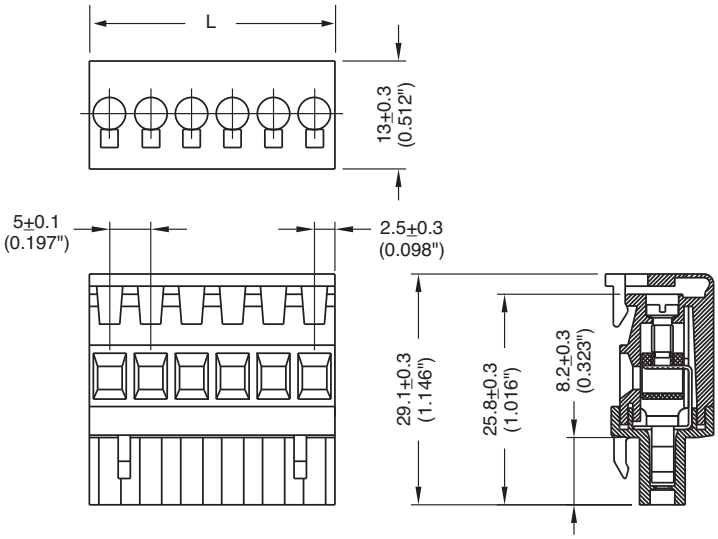

Part Numbering System

Series

EM2485

# of Poles

□□

02 - 08

Mating Header: EM2535 pg. 97

EM3105 Series
Euro-Mag Terminal Blocks

Pluggable Block; Top Entry
(Mates with EM2535 Series); 5.00 Centers

EM310508

SPECIFICATIONS
Rating: 16A, 300V
Center Spacing: 0.197" (5.00mm)
Wire Range: #14-24 AWG
Housing Material: UL rated 94V0 Thermoplastic
Contact Material: Tin-Plated Phos Bronze
Cage Clamp: Brass, Nickel-Plated
Screw Size: M2.6 Nickel-Plated Steel
Operating Temperature: 105°C (221°F) max., -40°C (-40°F) min.
Torque Rating: 4.5 lb-in.
Construction: Mold-to-Length
Agency Information: File E62622; CE Certified

Poles	L (mm)	Poles	L (mm)
2	10.0	8	40.0
3	15.0	9	45.0
4	20.0	10	50.0
5	25.0	11	55.0
6	30.0	12	60.0
7	35.0		

To convert to inches, divide by 25.4

Dimensions - mm (in)

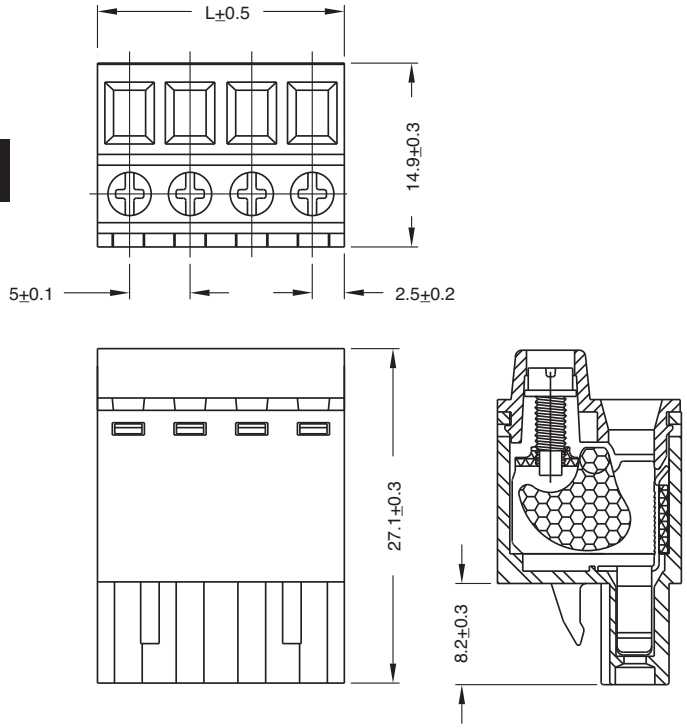

Part Numbering System

Series

EM3105

# of Poles

□□

02 to **12**

Mating Plugs: EM2525 pg. 94
EM2485 pg. 95
EM3105 pg. 96

EM2535 Series
Euro-Mag Terminal Blocks
Header (Mates with EM2525, EM2485 & EM3105 Series); 5.00 Centers

SPECIFICATIONS
Rating: 16A, 300V
Center Spacing: 0.197" (5.00mm)
Consult factory for 0.394" (10.00mm)
Housing Material: UL rated 94V0 Thermoplastic
Contact Material: Brass Tin-Plated
Operating Temperature: 105°C (221°F) max., -40°C (-40°F) min.
Recommended PCB Hole Diameters: 0.055" (1.40mm)
Construction: Mold-to-Length
Agency Information: c UL us File E62622; CE Certified

Position	Open L (mm)	Closed L (mm)	Position	Open L (mm)	Closed L (mm)
02	10.0	12.0	14	70.0	72.0
03	15.0	17.0	15	75.0	77.0
04	20.0	22.0	16	80.0	82.0
05	25.0	27.0	17	85.0	87.0
06	30.0	32.0	18	90.0	92.0
07	35.0	37.0	19	95.0	97.0
08	40.0	42.0	20	100.0	102.0
09	45.0	47.0	21	105.0	107.0
10	50.0	52.0	22	110.0	112.0
11	55.0	57.0	23	115.0	117.0
12	60.0	62.0	24	120.0	122.0
13	65.0	67.0			

To convert to inches, divide by 25.4

Dimensions - mm (in)

VERTICAL - CLOSED

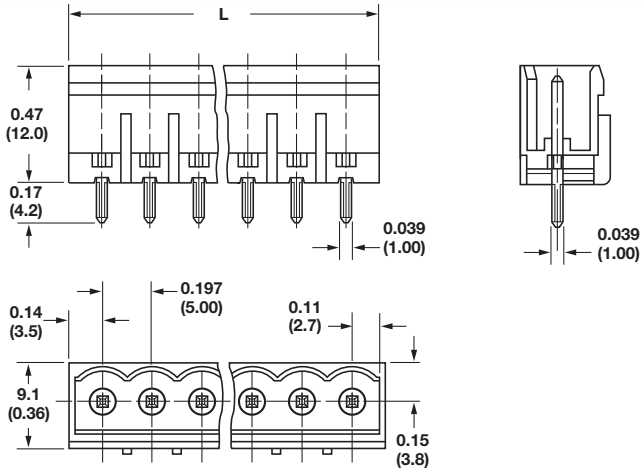

HORIZONTAL - OPEN

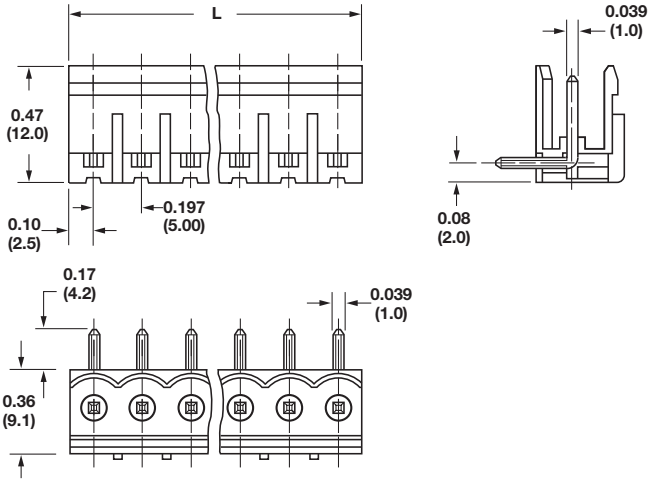

Part Numbering System

Series	# of Positions	Orientations	Side Base
EM2535	☐☐	☐	☐
	02 to **24**	**H** - horizontal **V** - vertical	**O** - open **C** - closed

Mating Plugs: EM2525 pg. 94
EM2485 pg. 95
EM3105 pg. 96

EM2565 Series
Euro-Mag Terminal Blocks

Pluggable Block (Mates with EM2575 Series); 5.08 Centers

EM25603VR

SPECIFICATIONS

Rating: 16A, 300V
Center Spacing: 0.20" (5.08mm)
Consult factory for 0.40" (10.16mm)
Wire Range: #12-26 AWG
Housing Material: UL rated 94V0 Thermoplastic
Contact Material: Brass Tin-Plated
Screw Size: M3x5 Zinc-Plated Steel
Operating Temperature: 105°C (221°F) max., -40°C (-40°F) min.
Torque Rating: 7 lb-in.
Construction: Mold-to-Length
Agency Information: c UL us File E62622; CE Certified

Position	L (mm)	Position	L (mm)
02	10.16	14	71.12
03	15.24	15	76.20
04	20.32	16	81.28
05	25.40	17	86.36
06	30.48	18	91.44
07	35.56	19	96.52
08	40.64	20	101.60
09	45.72	21	106.68
10	50.80	22	111.76
11	55.88	23	116.84
12	60.96	24	121.92
13	66.04		

To convert to inches, divide by 25.4

Dimensions - mm (in)

HORIZONTAL

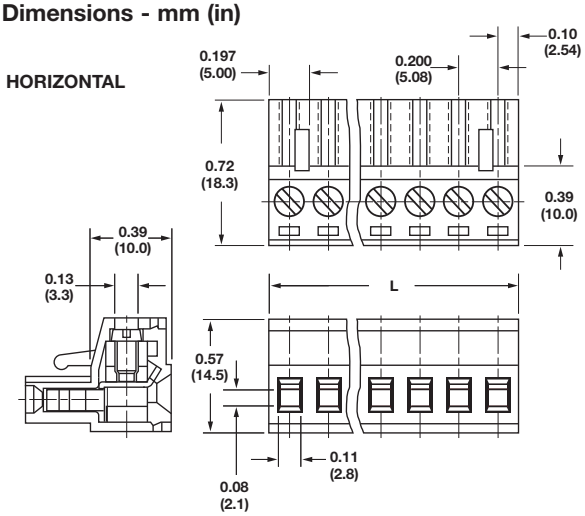

VERTICAL

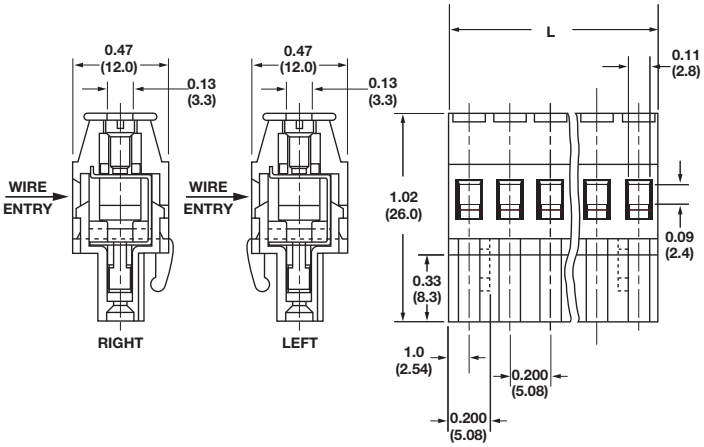

Part Numbering System

Series	# of Positions	Orientation	Wire Entry (Vertical Orientation Only)
EM2565	☐☐	☐	☐
	02 to **24**	**H** - horizontal **V** - vertical	**L** - left **R** - right

Mating Header: EM2575 pg. 101

EM2488 Series
Euro-Mag Terminal Blocks

Pluggable Block (Mates with EM2575 Series); 5.08 Centers with Cover

EM248806

SPECIFICATIONS
Rating: 16A, 300V
Center Spacing: 0.20" (5.08mm)
Wire Range: #14-24 AWG
Housing Material: UL rated 94V0 Thermoplastic
Contact Material: Brass Tin-Plated
Cage Clamp: Brass, Nickel-Plated
Screw Size: M2.6 Nickel-Plated Steel
Operating Temperature: 105°C (221°F) max., -40°C (-40°F) min.
Torque Rating: 4.5 lb-in.
Construction: Mold-to-Length
Agency Information: File E62622; CE Certified

Poles	L (mm)
2	10.16
3	15.24
4	20.32
5	25.40
6	30.48
7	35.56
8	40.64

To convert to inches, divide by 25.4

Dimensions - mm (in)

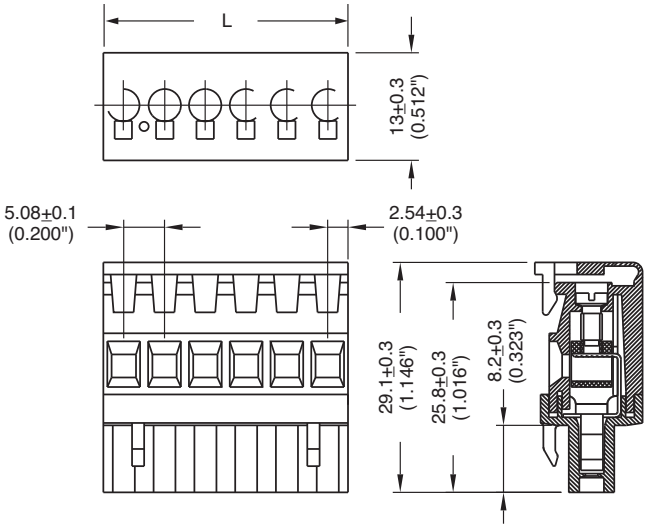

Part Numbering System

Series

EM2488

# of Poles

□□

02 to **08**

Mating Header: EM2575 pg. 101

EM3108 Series
Euro-Mag Terminal Blocks

Pluggable Block; Front Entry (Mates with EM2575 Series); 5.08 Centers

EM310808

SPECIFICATIONS
Rating: 16A, 300V
Center Spacing: 0.20" (5.08mm)
Wire Range: #14-24 AWG
Housing Material: UL rated 94V0 Thermoplastic
Contact Material: Brass Tin-Plated
Cage Clamp: Brass, Nickel-Plated
Screw Size: M2.6 Nickel-Plated Steel
Operating Temperature: 105°C (221°F) max., -40°C (-40°F) min.
Torque Rating: 4.5 lb-in.
Construction: Mold-to-Length
Agency Information: c UL us File E62622; CE Certified

Poles	L (mm)	Poles	L (mm)
2	10.16	14	71.12
3	15.24	15	76.20
4	20.32	16	81.28
5	25.40	17	86.36
6	30.48	18	91.44
7	35.45	19	96.52
8	40.64	20	101.60
9	45.72	21	106.68
10	50.80	22	111.76
11	55.88	23	116.84
12	60.96	24	121.92
13	66.04		

To convert to inches, divide by 25.4

Dimensions - mm (in)

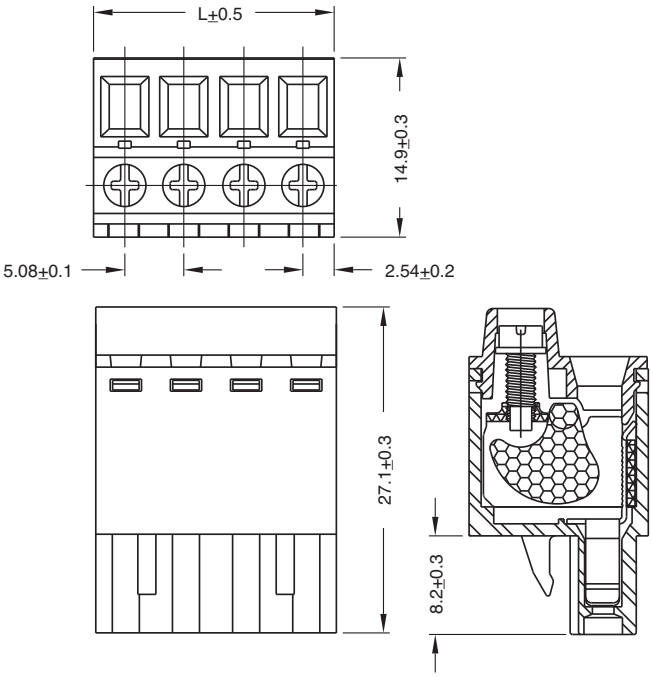

Part Numbering System

Series

EM3108

# of Poles

□□

02 to **24**

Mating Header: EM2575 pg. 101

EM2575 Series
Euro-Mag Terminal Blocks

Header (Mates with EM2565, EM2488, EM3108 Series); 5.08 Centers

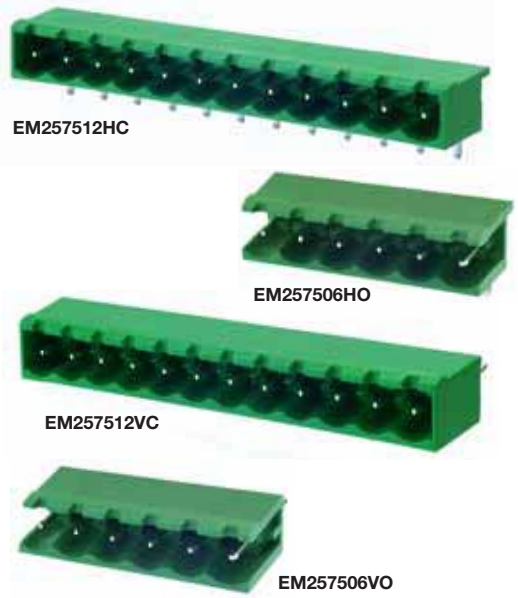

SPECIFICATIONS
Rating: 16A, 300V
Center Spacing: 0.20” (5.08mm)
Consult factory for 0.40” (10.16mm)
Housing Material: UL rated 94V0 Thermoplastic
Contact Material: Brass Tin-Plated
Operating Temperature: 105°C (221°F) max., -40°C (-40°F) min.
Recommended PCB Hole Diameters: 0.055" (1.40mm)
Construction: Mold-to-Length
Agency Information: File E62622; CE Certified

Poles	Open L (mm)	Closed L (mm)	Poles	Open L (mm)	Closed L (mm)
2	10.16	12.08	14	71.12	73.04
3	15.24	17.16	15	76.20	78.12
4	20.32	22.24	16	81.28	83.20
5	25.40	27.32	17	86.36	88.28
6	30.48	32.40	18	91.44	93.36
7	35.56	37.48	19	96.52	98.44
8	40.64	42.66	20	101.60	103.52
9	45.72	47.64	21	106.68	105.60
10	50.80	62.72	22	111.76	113.68
11	55.88	67.80	23	116.84	118.76
12	60.96	62.88	24	121.92	123.84
13	66.04	67.96			

To convert to inches, divide by 25.4

Dimensions - mm (in)

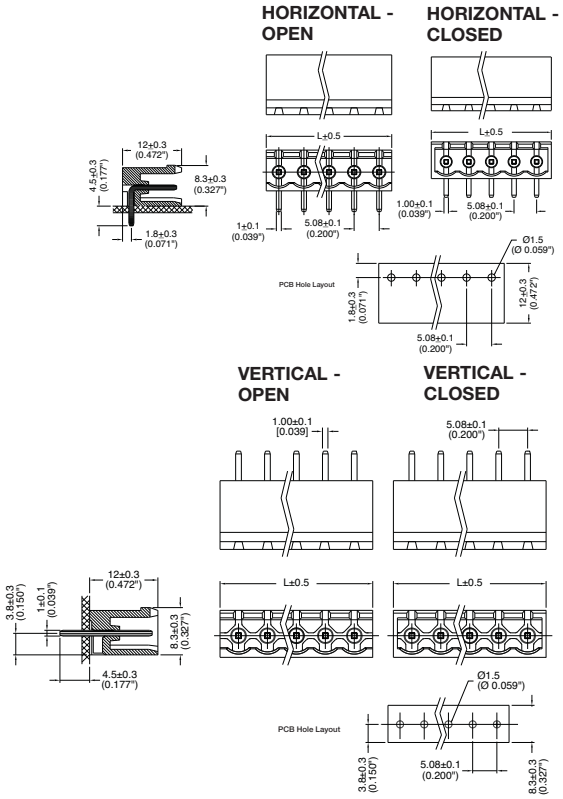

Part Numbering System

Series	# of Poles	Orientation	Side Base
EM2575	☐☐	☐	☐
	02 to **24**	**H** - horizontal **V** - vertical	**O** - open **C** - closed

Mating Plugs: EM2565 pg. 98
EM2488 pg. 99
EM3108 pg. 100

Series EM2115 Series

Pluggable Terminal Block with Flanges;
(Mates with EM2215 Series);5.00 Centers

SPECIFICATIONS:
Rating: 16A, 300V
Center Spacing: 0.197" (5.00mm)
Wire Range: #14-24 AWG
Housing Material: UL rated 94V0 Thermoplastic
Contact Material: Tin-Plated Phosphor Bronze
Screw Size: M2x6 Nickel-Plated Steel
Operating Temperature: 105°C (221°F) max., -55°C (-67°F) min.
Torque Rating: 4.5 lb-in.
Construction: Mold-to-Length
Agency Information: c UL us File E62622; CE Certified

Poles	A (mm)	A (Inch)	Poles	A (mm)	A (Inch)
2	20.0	0.787	13	75.0	2.952
3	25.0	0.984	14	80.0	3.149
4	30.0	1.181	15	85.0	3.346
5	35.0	1.378	16	90.0	3.543
6	40.0	1.575	17	95.0	3.740
7	45.0	1.772	18	100.0	3.937
8	50.0	1.969	19	105.0	4.133
9	55.0	2.165	20	110.0	4.330
10	60.0	2.362	21	115.0	4.527
11	65.0	2.559	22	120.0	4.724
12	70.0	2.756			

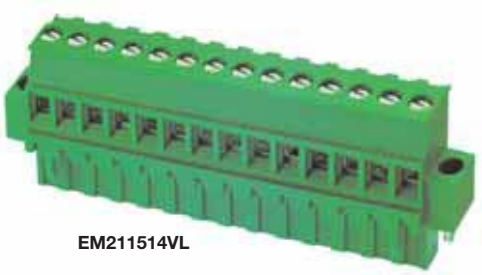

EM211514VL

Dimensions - mm (in)

Vertical

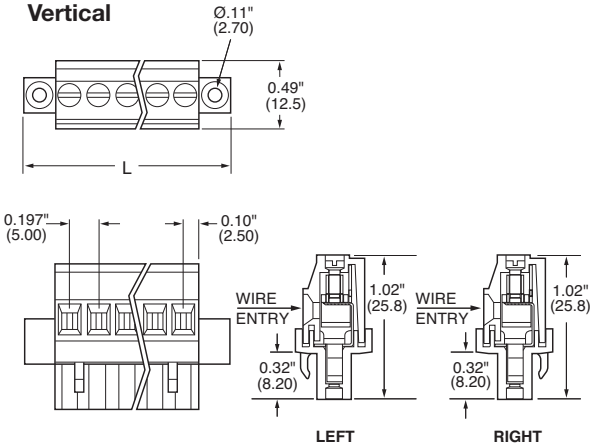

Horizontal

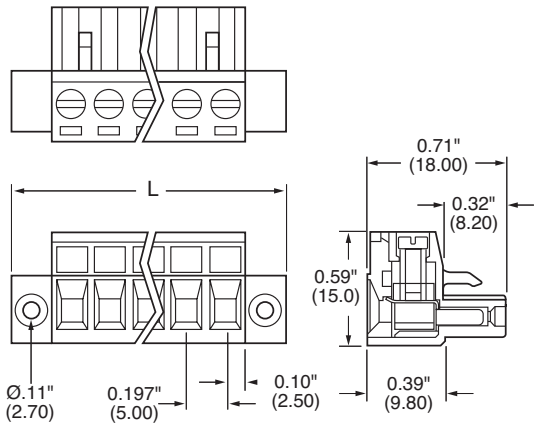

Part Numbering System

Inches (Millimeters)

Series
E M 2 1 1 5

# of Poles
☐☐
02 to **22**

Orientation
☐
V - Vertical
H - Horizontal

Wire Entry
☐
L - Left wire entry
R - Right wire entry
(specify for V orientation)

Mating Header: EM2215 pg. 104

EM3115 Series
Euro-Mag Terminal Blocks

Pluggable Block; Top Entry (Mates with EM2215 Series); 5.00 Centers

EM311503

SPECIFICATIONS
Rating: 16A, 300V
Center Spacing: 0.197" (5.00mm)
Wire Range: #14-24 AWG
Housing Material: UL rated 94V0 Thermoplastic
Contact Material: Brass Tin-Plated
Cage Clamp: Brass, Nickel-Plated
Screw Size: M2.6 Nickel-Plated Steel
Operating Temperature: 105°C (221°F) max., -40°C (-40°F) min.
Torque Rating: 4.5 lb-in.
Construction: Mold-to-Length
Agency Information: File E62622; CE Certified

Poles	L (mm)	Poles	L (mm)
2	20.0	14	80.0
3	25.0	15	85.0
4	30.0	16	90.0
5	35.0	17	95.0
6	40.0	18	100.0
7	45.0	19	105.0
8	50.0	20	110.0
9	55.0	21	115.0
10	60.0	22	120.0
11	65.0	23	125.0
12	70.0	24	130.0
13	75.0		

To convert to inches, divide by 25.4

Dimensions - mm (in)

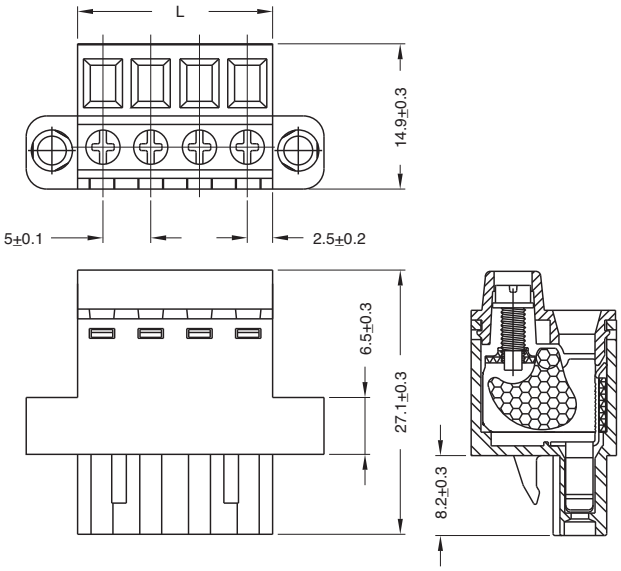

Part Numbering System

Series

E M 3 1 1 5

# of Poles

☐☐

02 to **22**

Mating Header: EM2215 pg. 104

Series EM2215

Header with Flanges; (Mates with EM2115, EM3115 Series); 5.00 Centers

EM221503V

SPECIFICATIONS:
Rating: 16A, 300V
Center Spacing: 0.197" (5.00mm)
Housing Material: UL rated 94V0 Thermoplastic
Contact Material: Tin-Plated Brass
Operating Temperature: 105°C (221°F) max., -55°C (-67°F) min.
Construction: Mold-to-Length
Agency Information: c UL us File E62622; CE Certified

Poles	A (mm)	A (Inch)	Poles	A (mm)	A (Inch)
2	10.0	0.393	13	65.0	2.559
3	15.0	0.590	14	75.0	2.953
4	20.0	0.787	15	80.0	3.150
5	25.0	0.984	16	85.0	3.346
6	30.0	1.181	17	90.0	3.543
7	35.0	1.378	18	95.0	3.740
8	40.0	1.575	19	100.0	3.937
9	45.0	1.772	20	105.0	4.133
10	50.0	1.969	21	110.0	4.331
11	55.0	2.165	22	115.0	4.528
12	60.0	2.362			

Dimensions - mm (in)

Horizontal

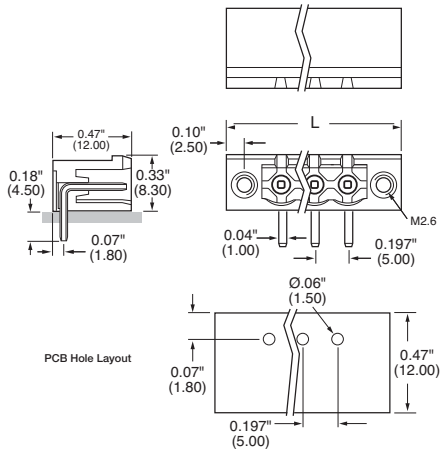

Vertical

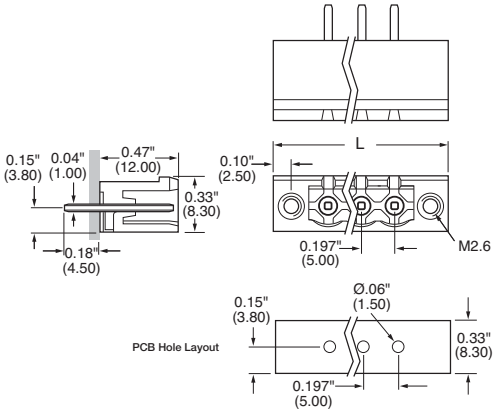

Part Numbering System

Inches (Millimeters)

Series

E M 2 2 1 5

# of Poles

☐☐

02 to 22

Orientation

☐

H - Horizontal
V - Vertical

Mating Plugs: EM2115 pg. 102
EM3115 pg. 103

Series EM2118 Series

Pluggable Terminal Block with Flanges;
(Mates with EM2218 Series); 5.08 Centers

EM211803H

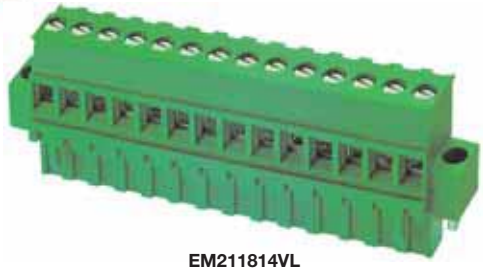

EM211814VL

SPECIFICATIONS:
Rating: 16A, 300V
Center Spacing: 0.20" (5.08mm)
Wire Range: #14-24 AWG
Housing Material: UL rated 94V0 Thermoplastic
Contact Material: Tin-Plated Phosphor Bronze
Screw Size: M 3x0 Nickel-Plated Steel
Operating Temperature: 105°C (221°F) max., -55°C (-67°F) min.
Torque Rating: 4.5 lb-in.
Construction: Mold-to-Length
Agency Information: c UL us File E62622; CE Certified

Poles	A (mm)	A (Inch)	Poles	A (mm)	A (Inch)
2	20.32	0.8	13	76.20	3.0
3	25.40	1.0	14	81.28	3.2
4	30.48	1.2	15	86.36	3.4
5	35.56	1.4	16	91.44	3.6
6	40.64	1.6	17	96.52	3.8
7	45.72	1.8	18	101.60	4.0
8	50.80	2.0	19	106.68	4.2
9	55.88	2.2	20	111.76	4.4
10	60.96	2.4	21	116.84	4.6
11	66.04	2.6	22	121.92	4.8
12	71.12	2.8			

Dimensions - mm (in)

VERTICAL

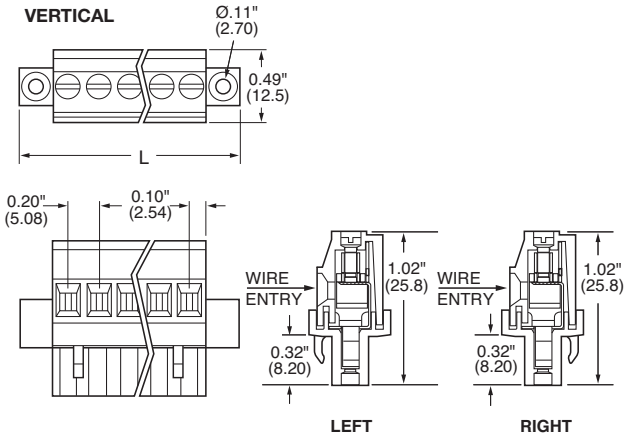

HORIZONTAL

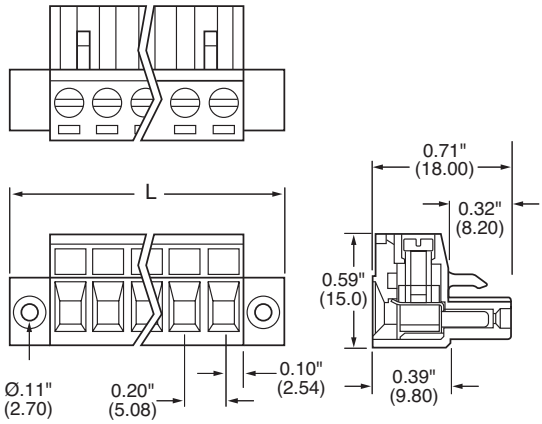

Part Numbering System

Inches (Millimeters)

Series	# of Positions	Orientation
EM2118	☐☐	☐
	02 to 22	V - Vertical H - Horizontal

Mating Header: EM2218 pg. 107

EM3118 Series
Euro-Mag Terminal Blocks

Pluggable Block, Top Entry (Mates with EM2218 Series); 5.08 Centers

EM311803

SPECIFICATIONS
Rating: 16A, 300V
Center Spacing: 0.20" (5.08mm)
Wire Range: #14-24 AWG
Housing Material: UL rated 94V0 Thermoplastic
Contact Material: Brass Tin-Plated
Cage Clamp: Brass, Nickel-Plated
Screw Size: M2.6 Nickel-Plated Steel
Operating Temperature: 105°C (221°F) max., -40°C (-40°F) min.
Torque Rating: 4.5 lb-in.
Construction: Mold-to-Length
Agency Information: c UL us File E62622; CE Certified

Poles	L (mm)	Poles	L (mm)
2	20.32	13	76.20
3	25.40	14	81.28
4	30.48	15	86.36
5	35.45	16	91.44
6	40.64	17	96.52
7	45.72	18	101.60
8	50.80	19	106.68
9	55.88	20	111.76
10	60.96	21	116.84
11	66.04	22	121.92
12	71.12		

To convert to inches, divide by 25.4

Dimensions - mm (in)

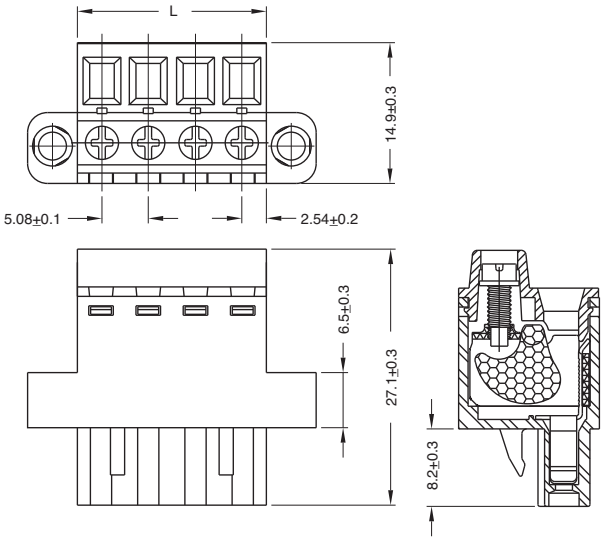

Part Numbering System

Series

E M 3 1 1 8

# of Poles

☐☐

02 to **22**

Mating Header: EM2218 pg. 107

Series EM2218

Header with Flanges; (Mates with EM2118, EM3118 Series); 5.08 Centers

SPECIFICATIONS:
Rating: 12A, 300V
Center Spacing: 0.20" (5.08mm)
Housing Material: UL rated 94V0 Thermoplastic
Contact Material: Tin-Plated Brass
Operating Temperature: 105°C (221°F) max., -55°C (-67°F) min.
Recommended PCB Hole Diameters: 0.059" (1.50mm)
Construction: Mold-to-Length
Agency Information: c UL us File E62622; CE Certified

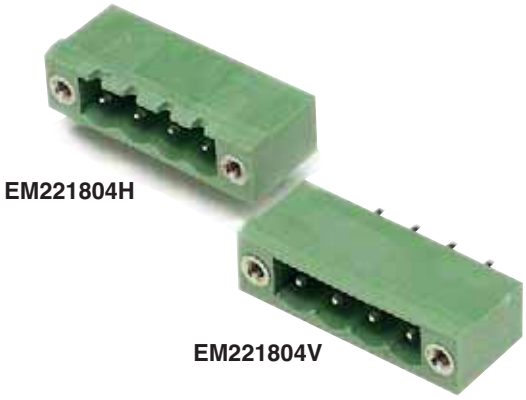

Poles	L (mm)	L (Inch)	Poles	L (mm)	L (Inch)
2	20.32	0.8	12	71.12	2.8
3	25.40	1.0	13	76.20	3.0
4	30.48	1.2	14	81.28	3.2
5	35.56	1.4	15	86.36	3.4
6	40.64	1.6	16	91.44	3.6
7	45.72	1.8	17	96.52	3.8
8	50.80	2.0	18	101.60	4.0
9	55.88	2.2	19	106.68	4.2
10	60.95	2.4	20	111.76	4.4
11	66.04	2.6			

Dimensions - mm (in)

Horizontal

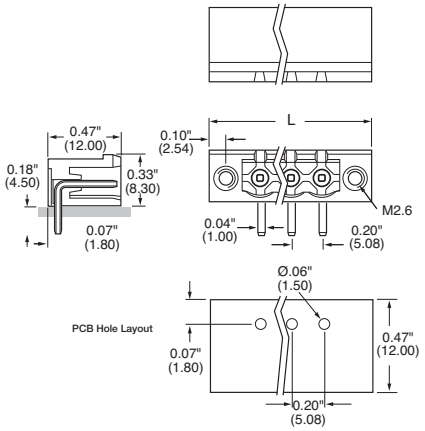

Vertical

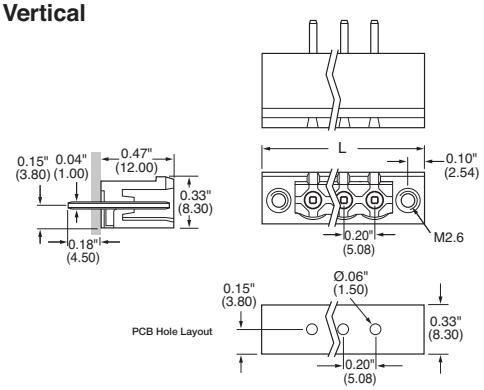

Part Numbering System

Inches (Millimeters)

Series

E M 2 2 1 8

# of Poles

☐☐

02 to 22

Orientation

☐

H - Horizontal
V - Vertical

Mating Plugs: EM2118 pg. 105
EM3118 pg. 106

Terminal Blocks: Single & Double Row
EuroMag Series
Terminal Blocks: Base & Rail Mount
Power Distribution Blocks
Wire Management Products
Edge Connectors, One-Sided Boards
Compliance References

EM3516 Series
Euro-Mag Terminal Blocks

Pluggable Block (Mates with EM3526 Series); 7.62 Centers

EM351603

SPECIFICATIONS
Rating: 16A, 300V
Center Spacing: 0.30" (7.62mm)
Wire Range: #14-24 AWG
Housing Material: UL rated 94V0 Thermoplastic
Contact Material: Tin-Plated Brass
Cage Clamp: Brass, Nickel-Plated
Screw Size: M3.0 Zinc-Plated Steel
Operating Temperature: 105°C (221°F) max., -40°C (-40°F) min.
Torque Rating: 5.0 lb-in.
Construction: Mold-to-Length
Agency Information: c UL us File E62622; CE Certified

Poles	L (mm)
2	8.41
3	12.22
4	16.03
5	19.84
6	23.65
7	27.46
8	31.27
9	35.08
10	38.89
11	42.70
12	46.51

To convert to inches, divide by 25.4

Dimensions - mm (in)

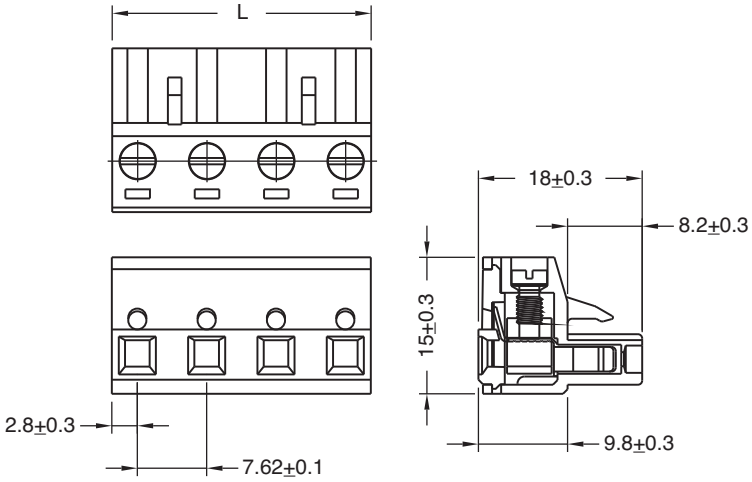

Part Numbering System

Series

E M 3 5 1 6

# of Poles

□□

02 to **12**

Mating Header: EM3526 pg. 109

EM3526 Series
Euro-Mag Terminal Blocks
Closed and Open Header (Mates with EM3516 Series); 7.62 Centers

EM352610HO

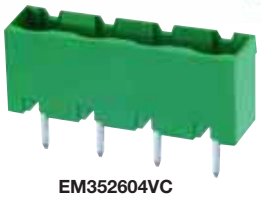

EM352604VC

SPECIFICATIONS
Rating: 16A, 300V
Center Spacing: 0.30" (7.62mm)
Housing Material: UL rated 94V0 Thermoplastic
Contact Material: Brass Tin-Plated
Operating Temperature: 105°C (221°F) max., -40°C (-40°F) min.
Recommended PCB Hole Diameters: 0.055" (1.40mm)
Construction: Mold-to-Length
Agency Information: c UL us File E62622; CE Certified

Poles	Open L (mm)	Closed L (mm)
2	13.44	15.24
3	21.06	22.86
4	28.68	30.48
5	36.60	38.10
6	43.92	45.72
7	51.54	53.34
8	59.16	60.96
9	66.78	68.58
10	74.40	76.20
11	82.02	83.82
12	89.64	91.44

To convert to inches, divide by 25.4

Dimensions - mm (in)

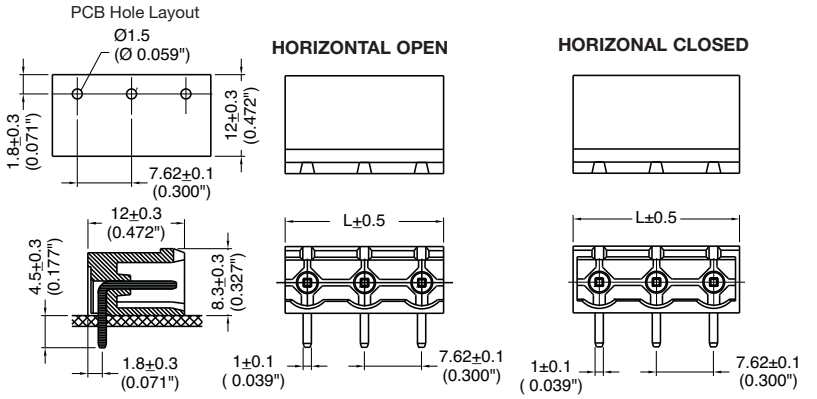

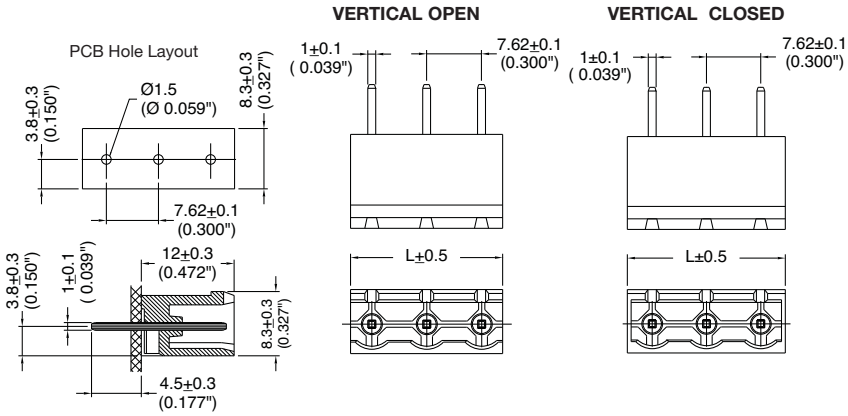

Part Numbering System

Series	# of Poles	Orientation	Side Base
EM3526	☐☐	☐	☐
	02 to **24**	**H** - horizontal **V** - vertical	**O** - open **C** - closed

Mating Plug: EM3516 pg. 108

EM2416 Series
Euro-Mag Terminal Blocks

Pluggable Block with Flanges (Mates with EM2426 Series); 7.62 Centers

EM241602

SPECIFICATIONS
Rating: 16A, 300V
Center Spacing: 0.30" (7.62mm)
Wire Range: #14-24 AWG
Housing Material: UL rated 94V0 Thermoplastic
Contact Material: Tin-Plated Brass
Cage Clamp: Brass, Nickel-Plated
Screw Size: M3.0 Zinc-Plated Steel
Operating Temperature: 105°C (221°F) max., -40°C (-40°F) min.
Torque Rating: 5.0 lb-in.
Construction: Mold-to-Length
Agency Information: c UL us File E62622; CE Certified

Poles	L (mm)
2	24.90
3	32.50
4	40.10
5	47.80
6	55.40
7	63.00
8	70.60
9	78.20
10	89.90
11	93.50
12	101.10

To convert to inches, divide by 25.4

Dimensions - mm (in)

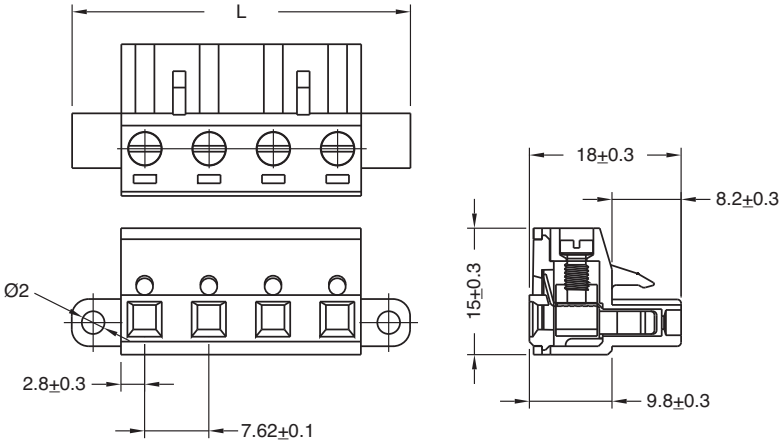

Part Numbering System

Series

E M 2 4 1 6

# of Poles

☐☐

02 to **12**

Mating Header: EM2426 pg. 111

EM2426 Series
Euro-Mag Terminal Blocks

Header with Flanges (Mates with EM2416 Series); 7.62 Centers

EM242603V

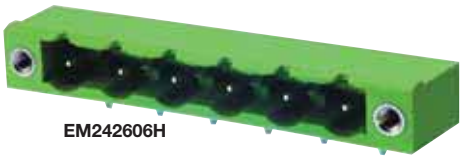

EM242606H

SPECIFICATIONS
Rating: 16A, 300V
Center Spacing: 0.30" (7.62mm)
Housing Material: UL rated 94V0 Thermoplastic
Contact Material: Tin-Plated Brass
Operating Temperature: 105°C (221°F) max., -40°C (-40°F) min.
Recommended PCB Hole Diameters: 0.059" (1.50mm)
Construction: Mold-to-Length
Agency Information: File E62622; CE Certified

Poles	L (mm)	Poles	L (mm)
2	25.62	8	71.34
3	33.24	9	78.96
4	40.86	10	86.58
5	48.48	11	94.20
6	56.10	12	101.80
7	63.72		

To convert to inches, divide by 25.4

Dimensions - mm (in)

HORIZONTAL

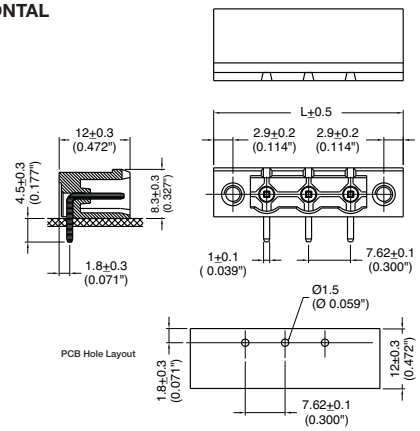

VERTICAL

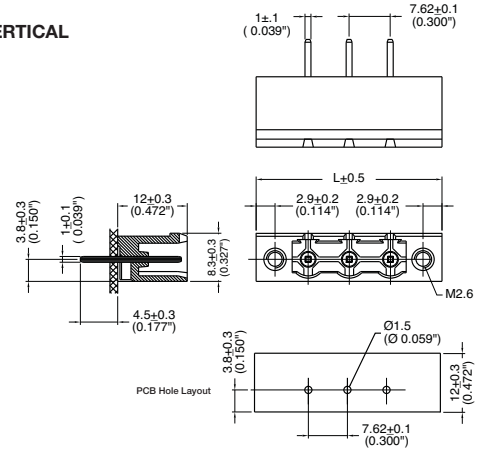

Part Numbering System

Series	# of Poles	Orientation
EM2426	☐☐	☐
	02 to **12**	**H** - horizontal **V** - vertical

Mating Plug: EM2416 pg. 110

Terminal Blocks: Single & Double Row
EuroMag Series
Terminal Blocks: Base & Rail Mount
Power Distribution Blocks
Wire Management Products
Edge Connectors, One-Sided Boards
Compliance References

EM5015 Series
Euro-Mag Terminal Blocks

Pluggable Block
(Mates with EM5025 Series); 5.00 Centers

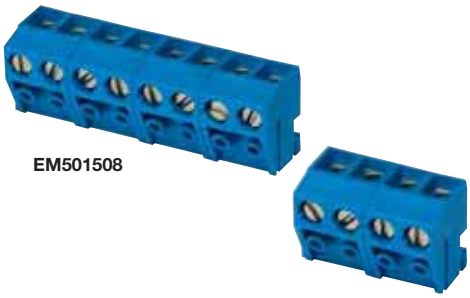

SPECIFICATIONS
Rating: 15A, 300V
Center Spacing: 0.197" (5.00mm)
Wire Range: #16-24 AWG
Housing Material: Blue UL 94V0 Thermoplastic
Contact Material: Tin-Plated Brass
Screw Size: M2x6 Chromatized Steel
Operating Temperature: 120°C (221°F) max., -40°C (-40°F) min.
Torque Rating: 3.0 lb-in.
Construction: Modular design features dovetails for interlocking to achieve longer lengths
Connector Style: Spring Clamp
Agency Information: c UL us File E62622; CE Certified

Poles	L (mm)	Poles	L (mm)
2*	10.0	14	70.0
3*	15.0	15	75.0
4	20.0	16	80.0
5	25.0	17	85.0
6	30.0	18	90.0
7	35.0	19	95.0
8	40.0	20	100.0
9	45.0	21	105.0
10	50.0	22	110.0
11	55.0	23	115.0
12	60.0	24	120.0
13	65.0		

To convert to inches, divide by 25.4
*Mold-to-Length

Dimensions - mm (in)

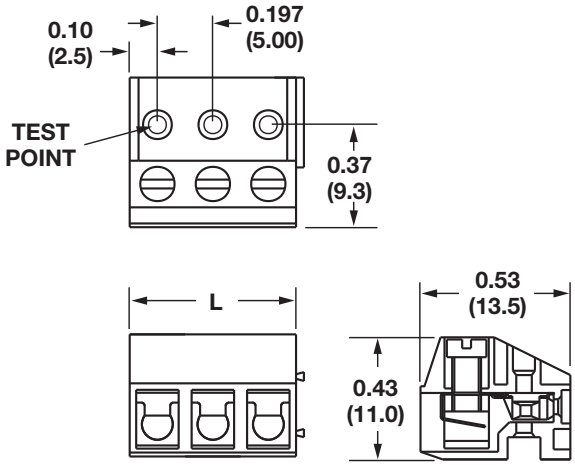

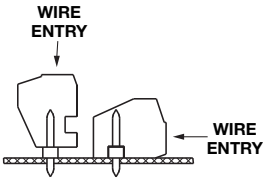

Mating orientations

Part Numbering System

Series

E M 5 0 1 5

# of Poles

☐☐

02 to **24**

Mating Header: EM5025 pg. 113

EM5025 Series
Euro-Mag Terminal Blocks
Header (Mates with EM5015 Series);
5.00 Centers

SPECIFICATIONS
Rating: 15A, 300V
Center Spacing: 0.197" (5.00mm)
Housing Material: Black UL 94V0 Thermoplastic
Contact Material: Tin-Plated Brass
Operating Temperature: 120°C (221°F) max., -40°C (-40°F) min.
Recommended PCB Hole Diameters: 0.059" (1.50mm)
Construction: Mold-to-Length
Agency Information: c UL us File E62622; CE Certified

Poles	L (mm)	Poles	L (mm)
2	10.0	14	70.0
3	15.0	15	75.0
4	20.0	16	80.0
5	25.0	17	85.0
6	30.0	18	90.0
7	35.0	19	95.0
8	40.0	20	100.0
9	45.0	21	105.0
10	50.0	22	110.0
11	55.0	23	115.0
12	60.0	24	120.0
13	65.0		

To convert to inches, divide by 25.4

Dimensions - mm (in)

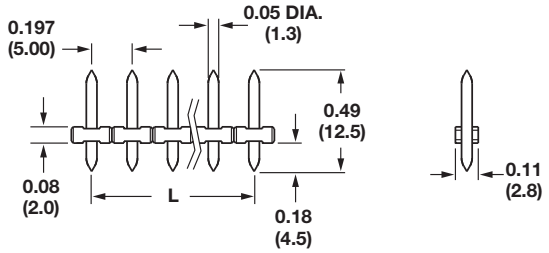

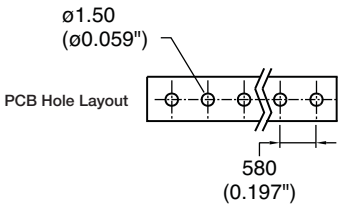

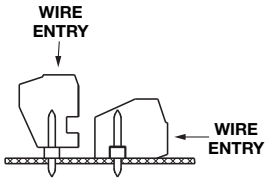

Mating orientations

Part Numbering System

Series

EM5025

# of Poles

□□

02 to **24**

Mating Plug: EM5015 pg. 112

EM5035 Series
Euro-Mag Terminal Blocks

Pluggable Block, Stackable
(Mates with EM5045 Series) 5.00 Centers

Shown with EM5045series header - order seperately

SPECIFICATIONS
Rating: 10A, 300V
Center Spacing: 0.197" (5.00mm)
Wire Range: #16-24 AWG
Housing Material: Black UL 94V0 Thermoplastic
Contact Material: Tin-Plated Brass
Wire Protector: Phosphor Bronze, Tin-Plated
Screw Size: M2.6 Chromatized Steel
Operating Temperature: 105°C (221°F) max., -40°C (-40°F) min.
Torque Rating: 3.0 lb-in.
Construction: Modular design features doveails for interlocking to achieve longer lengths
Agency Information: File E62622; CE Certified

Poles	L (mm)	Poles	L (mm)
2	10.0	14	70.0
3	15.0	15	75.0
4	20.0	16	80.0
5	25.0	17	85.0
6	30.0	18	90.0
7	35.0	19	95.0
8	40.0	20	100.0
9	45.0	21	105.0
10	50.0	22	110.0
11	55.0	23	115.0
12	60.0	24	120.0
13	65.0		

To convert to inches, divide by 25.4

Dimensions - mm (in)

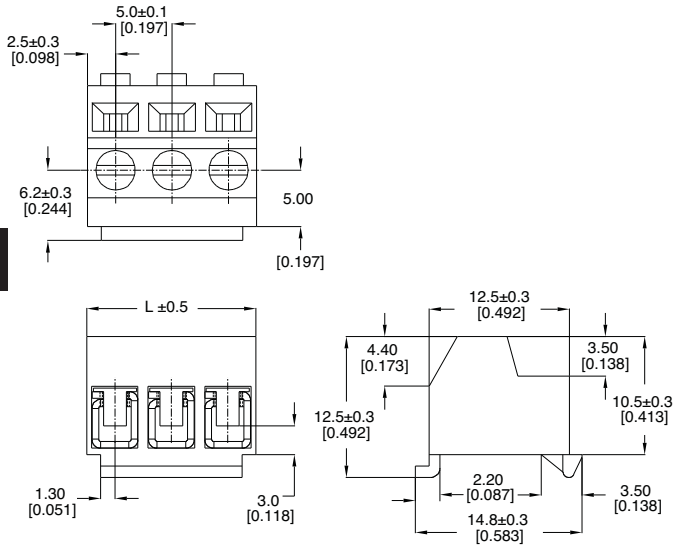

Part Numbering System

Series

E M 5 0 3 5

# of Poles

☐☐

02 to **24**

Mating Plug: EM5045 pg. 115

EM5045 Series
Euro-Mag Terminal Blocks

Header (Mates with EM5035 Series); 5.00 Centers

EM504513

SPECIFICATIONS
Rating: 10A, 300V
Center Spacing: 0.197" (5.00mm)
Housing Material: Black UL 94V0 Thermoplastic
Contact Material: Tin-Plated Brass
Operating Temperature: 105°C (221°F) max., -40°C (-40°F) min.
Recommended PCB Hole Diameters: 0.059" (1.50mm)
Construction: Mold-to-Length
Agency Information: c UL us File E62622; CE Certified

Dimensions - mm (in)

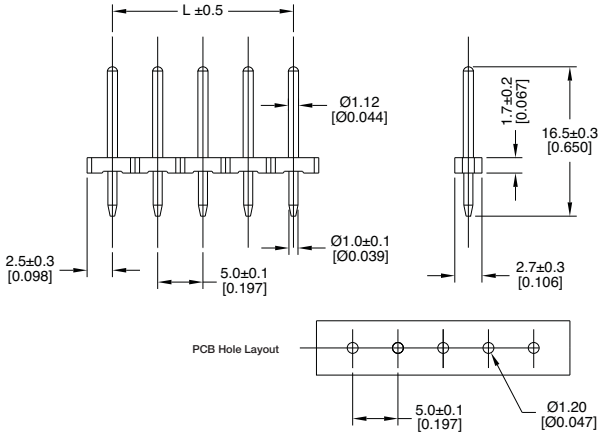

Poles	L (mm)	Poles	L (mm)
2	5.0	14	65.0
3	10.0	15	70.0
4	15.0	16	75.0
5	20.0	17	80.0
6	25.0	18	85.0
7	30.0	19	90.0
8	35.0	20	95.0
9	40.0	21	100.0
10	45.0	22	105.0
11	50.0	23	110.0
12	55.0	24	115.0
13	60.0		

To convert to inches, divide by 25.4

Part Numbering System

Series	# of Poles
EM5045	☐☐
	02 to **24**

Series NDN Rail Mount Terminal Blocks

35mm DIN Rail Compatible

SPECIFICATIONS

High Density Design: Up to 48 circuits per foot
Clamping Collar: Secures wires
Large, Captive, Wire-Ready Screws: Speeds assembly
Snap-on Installation to DIN Rail: Fast, easy assembly
Fully Shielded Construction: 600V spacings
Unique One-Piece Construction: Increases reliability
Thermoplastic Moldings: Strong and impact resistant
Material: UL Recognized 94V2 thermoplastic
Collars: Heat treated stainless steel
Terminals: Tin plated copper alloy
Screws: zinc-plated steel
Agency Information: UL/CSA; CE Certified

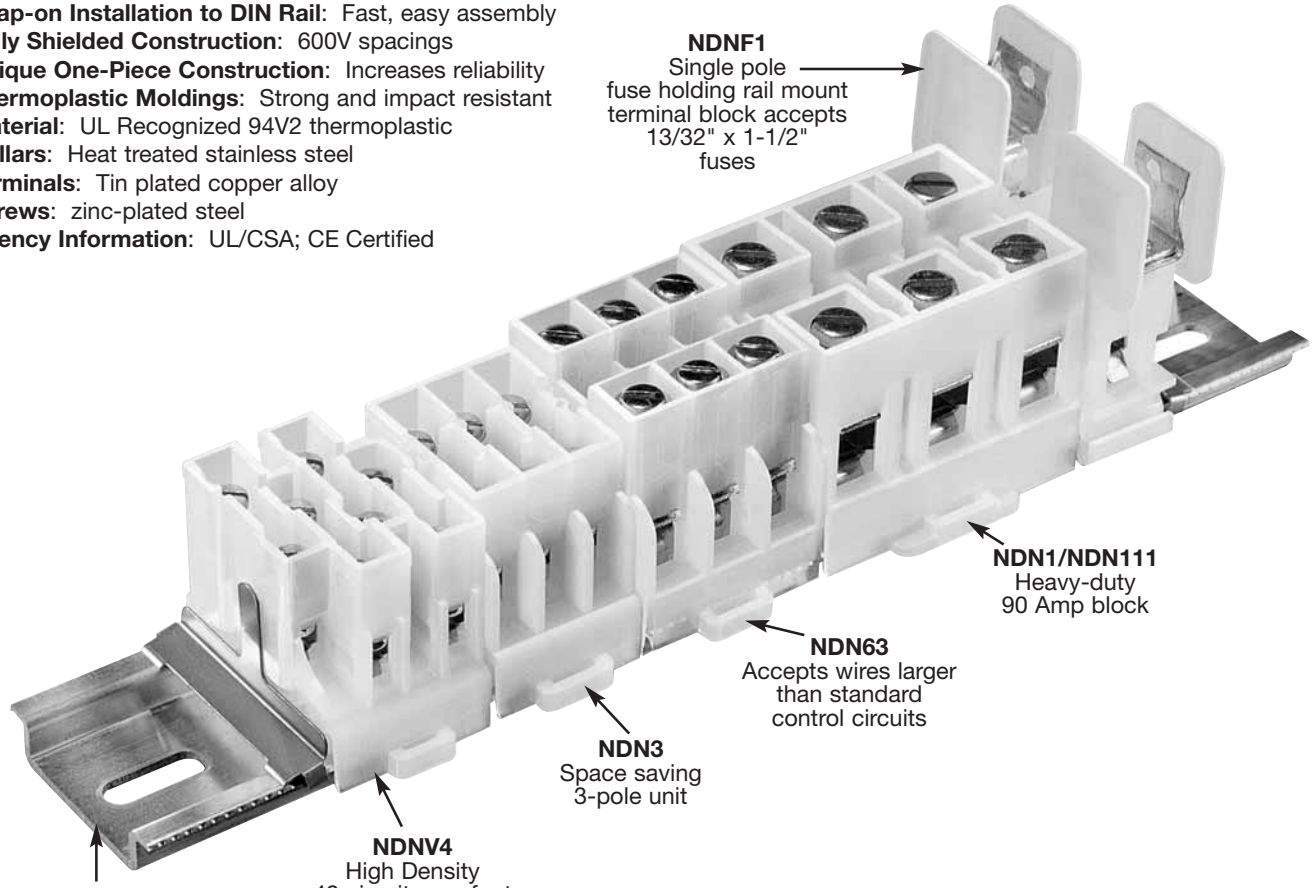

Series NDN Terminal Block Accessories

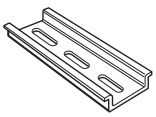

NDNA
35mm DIN Rail
Aluminum
NDNA 100 1 meter
NDNA 200 2 meters

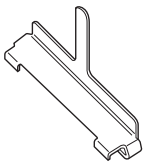

NDNAS
35mm DIN Rail
End Stop

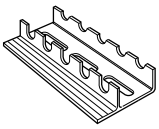

NFTA
C-Rail
Aluminum
Lengths to 72"

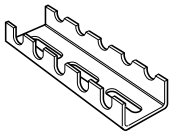

NRA
C-Rail
Low Profile
No Flange
Aluminum
Lengths to 37-1/2"

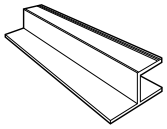

SOA72
72" Long
Stand-Off Channel
For C-Rail

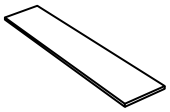

MARKING TAPE
See Series
Specifications

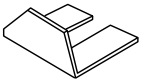

JUMPERS
See Series
Specifications

Rail Mount Terminal Blocks

NDN63

SPECIFICATIONS:
Rating: 65A, 600V
Center Spacing: 0.375" (9.52mm)
Number of Poles: 3
Circuits Per Foot: 30
Circuit Jumper: JN3, 2 circuits
Wire Range: AWG #6-18 CU
Screw Size: #10-32
Mounting Options: 35mm DIN rail, C-rail
Marking Tape: MT12-1-2
Torque Rating: 35 lb-in
Operating Temperature: 105°C
Agency Information: UL File E62622, CSA File 15364

Dimensions - in (mm)

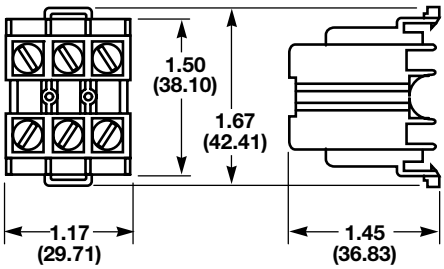

NDN1

SPECIFICATIONS:
Rating: 90A, 600V
Center Spacing: 0.635" (16.13mm)
Number of Poles: 1
Circuits Per Foot: 18
Wire Range: AWG #2-18 CU
Screw Size: #1/4-28
Mounting Options: 35mm DIN rail, C-rail
* Dove-tail option is available for mounting side-by-side. Order part no. NDN1A-WH
Marking Tape: MT12-1-2
Torque Rating: 32 lb-in
Operating Temperature: 105°C
Agency Information: UL File E62622, CSA File 47235

Dimensions - in (mm)

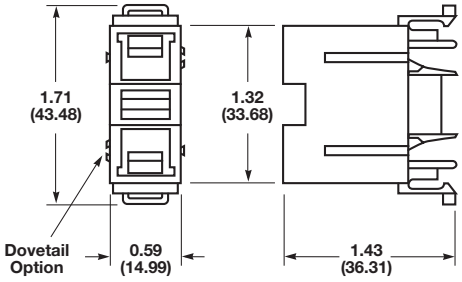

NDN111

SPECIFICATIONS:
Rating: 90A, 600V
Center Spacing: 0.635" (16.13mm)
Number of Poles: 3
Circuits Per Foot: 18
Circuit Jumper: JN1, 2 circuits
Wire Range: AWG #2-18 CU
Screw Size: #1/4-28
Mounting Options: 35mm DIN rail, C-rail, Base Mount
* Dove-tail option is available for mounting side-by-side. Order part no. NDN111-A
Marking Tape: MT12-1-2
Torque Rating: 32 lb-in
Operating Temperature: 105°C
Agency Information: UL File E62622, CSA File 47235

Dimensions - in (mm)

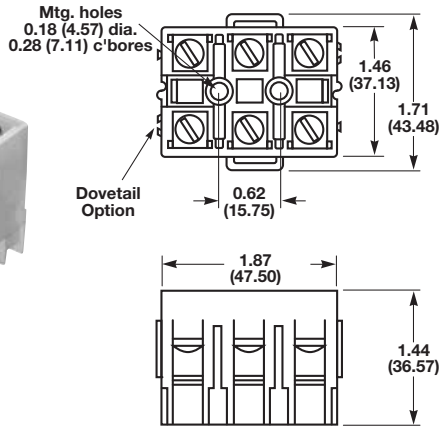

Rail Mount Terminal Blocks

NDNV4

SPECIFICATIONS:
Rating: NDNV4 30A, 600V
Center Spacing: 0.25" (6.35mm)
Number of Poles: 4
Circuits Per Foot: 48
Circuit Jumper: JN4, 4 circuits
Wire Range: AWG #10-22 CU
Screw Size: #6-32
Mounting Options: 35mm DIN rail, C-rail
Marking Tape: MTC6
Torque Rating: 18 lb-in
Operating Temperature: 105°C
Agency Information: UL File E62622, CSA File 15364

Dimensions - in (mm)

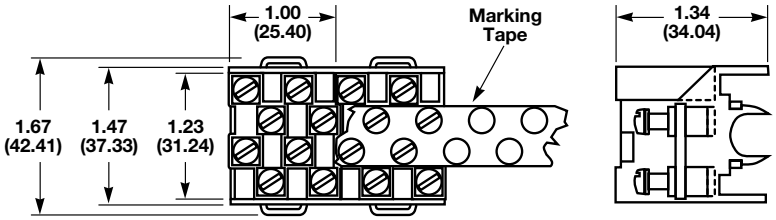

NDN3

SPECIFICATIONS:
Rating: 30A - field wiring: 40A - factory wiring
600V
Center Spacing: 0.300" (7.62mm)
Number of Poles: 3
Circuits Per Foot: 38
Circuit Jumper: JNDN3, 2 circuits
Wire Range: AWG #10-22 CU
Screw Size: #6-32
Mounting Options: 35mm DIN rail, C-rail
Marking Tape: MT12-1-2
Torque Rating: 18 lb-in
Operating Temperature: 105°C
Agency Information: UL File E62622, CSA File 15364

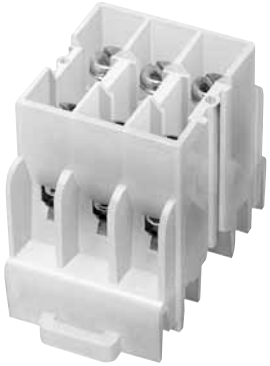

Dimensions - in (mm)

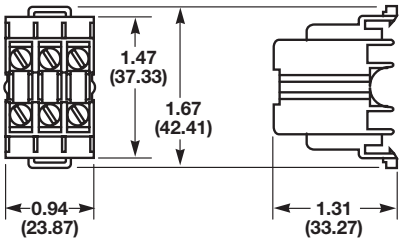

Rail Mount Terminal Blocks

N512

SPECIFICATIONS:
Rating: 5A, 600V; 20A, 300V
Center Spacing: 0.197" (5.00mm)
Number of Poles: 12
Circuits Per Foot: 60
Circuit Jumper: JN512, 12 circuits
Wire Range: AWG #12-22 CU
Screw Size: #4-48
Mounting Options: C-rail, 15mm DIN rail
Marking Tape: AT512
Torque Rating: 12 lb-in
Operating Temperature: 105°C
Agency Information: CSA File 15364

Dimensions - in (mm)

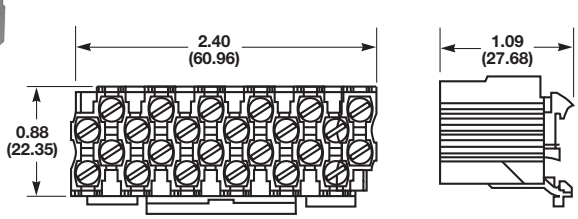

NFT2

SPECIFICATIONS:
Rating: 40A, 600V;
55A Factory Wired
Center Spacing: 0.281" (7.13mm)
Number of Poles: 2
Circuits Per Foot: 38
Circuit Jumper: JN2, 2 circuits
Wire Range: AWG #8-22 CU
Screw Size: #8-32
Mounting Options: C-rail
Marking Tape: MT12-1-2
Torque Rating: 18 lb-in
Operating Temperature: 105°C
Agency Information: UL File E62622, CSA File 15364

Dimensions - in (mm)

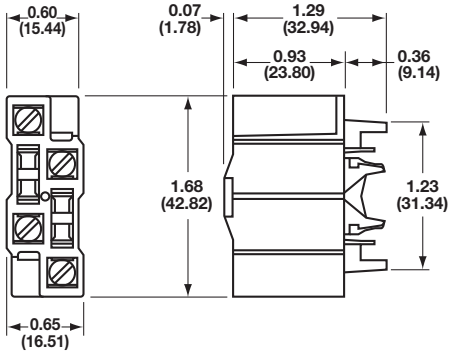

NFT3

SPECIFICATIONS:
Rating: 40A, 600V
55A Factory Wired
Center Spacing: 0.390" (9.91 mm)
Number of Poles: 3
Circuits Per Foot: 28
Circuit Jumper: JN3, 2 circuits
Wire Range: AWG #8-22 CU
Screw Size: #8-32
Mounting Options: C-rail
Marking Tape: MT12-1-2
Torque Rating: 18 lb-in
Operating Temperature: 105°C
Agency Information: UL File E62622, CSA File 47235

Dimensions - in (mm)

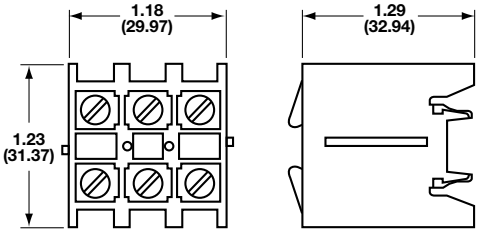

Rail & Base Mount Terminal Blocks

NC3

SPECIFICATIONS:
Rating: 175A, 600V
Center Spacing: 1.06" (26.92mm)
Number of Poles: 3
Circuits Per Foot: 11
Wire Range: 2/0-#14 CU/AL
Screw Size: 5/16-24
Mounting Options: C-rail, Base Mount
Marking Tape: MT12-1-2
Torque Rating: 45 lb-in
Operating Temperature: 105°C
Agency Information: UL File E62622, CSA File 15364

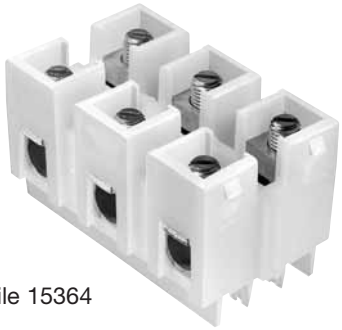

Dimensions - in (mm)

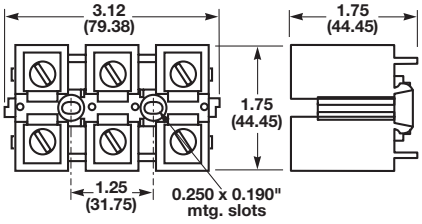

NSE3

SPECIFICATIONS:
Rating: 115A, 600V
Center Spacing: 1.06" (26.92mm)
Number of Poles: 3
Circuits Per Foot: 11
Circuit Jumper: JNSE3, 2 circuits
Wire Range: For use with wire crimped to ring terminal
Screw Size: #1/4-28
Mounting Options: C-rail, Base Mount
Marking Tape: MT12-1-2
Torque Rating: 32 lb-in
Operating Temperature: 105°C
Agency Information: UL File E62622, CSA File 15364

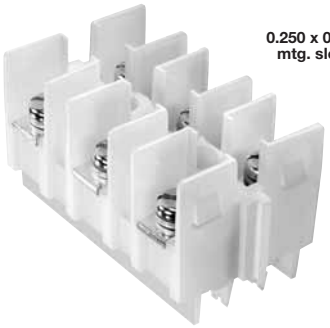

Dimensions - in (mm)

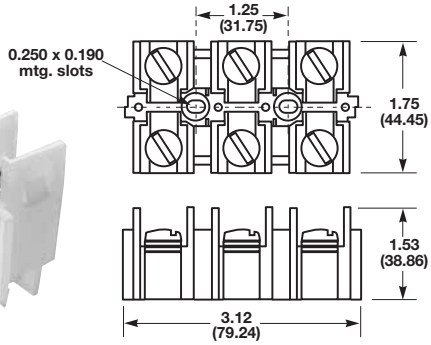

NSS3

SPECIFICATIONS:
Rating: 30A, 600V
Center Spacing: 0.385" (9.77mm)
Number of Poles: 3
Circuits Per Foot: 28
Circuit Jumper: JNSS3, 2 circuits
Wire Range: For use with wire crimped to ring terminal
Screw Size: #6-32
Mounting Options: C-rail
Marking Tape: MT12-1-2
Torque Rating: 12 lb-in
Operating Temperature: 105°C
Agency Information: UL File E62622, CSA File 15364

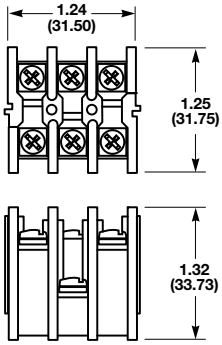

Depluggable Rail Mount Terminal Blocks

PLU3

SPECIFICATIONS:
Rating: 40A, 600V
Center Spacing: 0.390" (9.91mm)
Number of Poles: 3
Circuits Per Foot: 28
Circuit Jumper: JN3, 2 circuits
Wire Range: AWG #8-22 CU
Screw Size: #8-32
Mounting Options: C-rail, Stackable
Marking Tape: MT12-1-2
Torque Rating: 18 lb-in
Operating Temperature: 105°C
Agency Information: UL File E62622, CSA File 15364

Dimensions - in (mm)

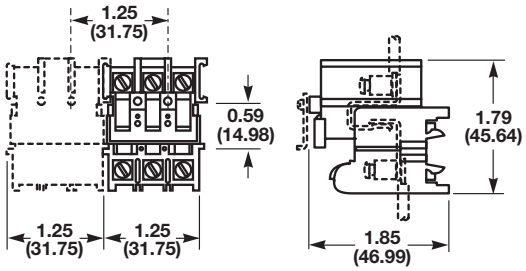

PLU1 Series

SPECIFICATIONS:
Rating: 70A, 600V
Center Spacing: 0.625" (15.88mm)
Number of Poles: 1-3
Part Numbers:
- PLU1 (1-pole)
- PLU11 (2-pole)
- PLU111 (3-pole)

Circuits Per Foot: 19
Circuit Jumper: JN1, 2 circuits
Wire Range: AWG #4-18 CU
Screw Size: #1/4-28
Mounting Options: C-rail, Stackable
Marking Tape: MT12-1-2
Torque Rating: 32 lb-in
Operating Temperature: 105°C
Agency Information: UL File E62622, CSA File 15364

Dimensions - in (mm)

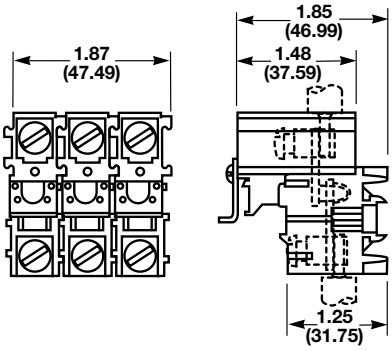

PSU1 Series

SPECIFICATIONS:
Rating: 45A*, 600V
*45A rating achieved with ring terminal crimped to wire.
Center Spacing: 0.625" (15.88 mm)
Number of Poles: 1-3
Part Number:
- PSU1 (1-pole)
- PSU11 (2-pole)
- PSU111 (3-pole)

Circuits Per Foot: 19
Wire Range: For use with crimp on connectors only.
Screw Size: #10-32
Mounting Options: C-rail, Stackable
Marking Tape: MT12-1-2
Torque Rating: 24 lb-in
Operating Temperature: 105°C
Agency Information: UL File E62622, CSA File 15364

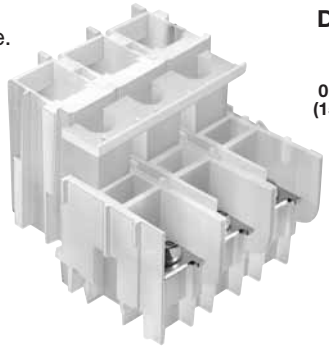

Dimensions - in (mm)

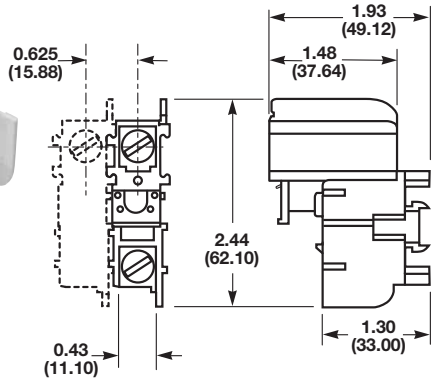

Fuse Holding Rail Mount Terminal Blocks

NDNF1

SPECIFICATIONS:
Rating: 30A, 600V; UL/CSA
Number Of Poles: 1
Fuse Size: 13/32" x 1-1/2"
Circuit Jumper: JF1, 2 Circuits
Wire Range: AWG #8-22 CU
Mounting Options: 35mm DIN rail, C-rail
Fuse Pullers: • PF1 (standard)
• neon or incandescent bulb
*LPF1 (lighted neon or incandescent bulb).
Torque Rating: 18 lb-in
Operating Temperature: 105°C
Agency Information: CSA File 15364

Dimensions - in (mm)

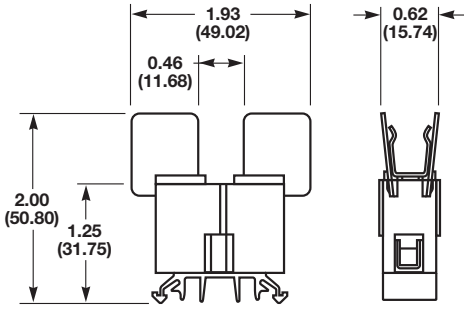

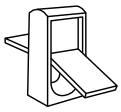

PF1
Fuse Puller

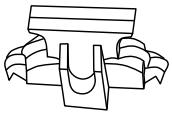

LPF1
Lighted Fuse Puller

*Visual indicator for open fuse is neon or incandescent bulb, depending on voltage. Specify voltage required.

NDND1 non-fused terminal block enables isolation of individual circuits for testing

NDNFD1 fused terminal block

NDNLFD1 fused terminal block with visual indicator* for open fuse

SPECIFICATIONS:
Ratings: NDND1: 30A, 600V
NDNFD1: 15A, 600V
NDNLFD1: 15A, 600V
Number of Poles: 1
Fuse size: 1/4" x 1-1/4"
Circuit Jumper: JF1, 2 circuits
Wire Range: AWG #8-22 CU
Mounting Options: 35mm DIN rail, C-rail
Marking Tape: MT12-1-2
Torque Rating: 18 lb-in
Operating Temperature: 105°C
Agency Information: CSA File 15364

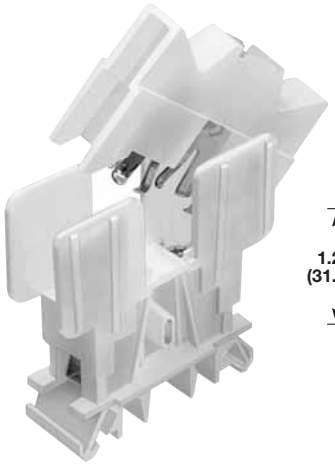

Dimensions - in (mm)

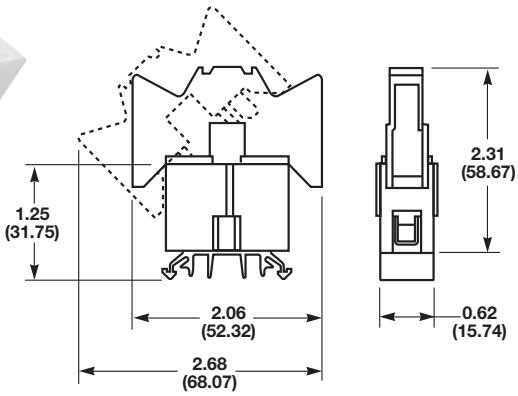

*Visual indicator for open fuse is neon or incandescent bulb, depending on voltage. Specify voltage required.

Quick Connect Terminal Blocks

NTQ23

SPECIFICATIONS:
Rating: 40A, 600V
Center Spacing: 0.390" (9.91mm)
Number of Poles: 3
Circuits Per Foot: 28
Wire Range: AWG #8-22 CU
Screw Size: #8-32
Quick Connects: 0.250" x 0.031"
Mounting Options: C-rail
Marking Tape: MT12-1-2
Torque Rating: 18 lb-in
Operating Temperature: 105°C

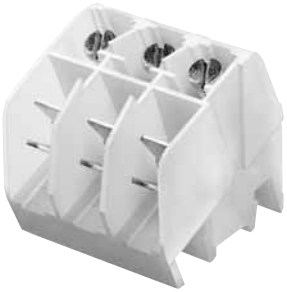

Dimensions - in (mm)

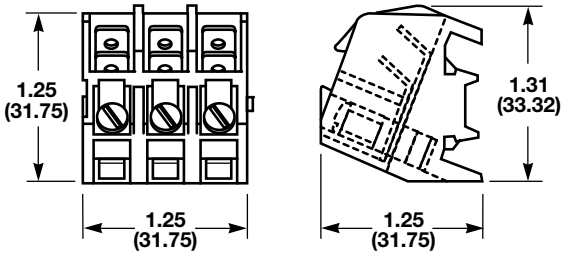

BNQ21

SPECIFICATIONS:
Rating: 40A, 600V
Center Spacing: 0.437" (11.10mm)
Number of Poles: 1
Circuits Per Foot: 24
Wire Range: AWG #8-22 CU
Screw Size: #8-32
Quick Connects: 0.250" x 0.031"
Mounting Options: Base Mount Stackable; End Piece (Part No. BQE) is required for mounting. Mounting screws recommended every 8 circuits.
Torque Rating: 18 lb-in
Operating Temperature: 105°C
Screw Size: #8-32
Agency Information: UL File E62622, CSA File 15364

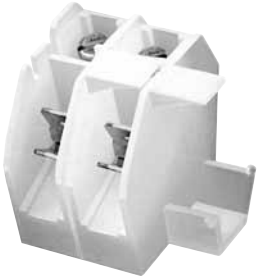

BQE
End Mounting Adapter Required

Dimensions - in (mm)

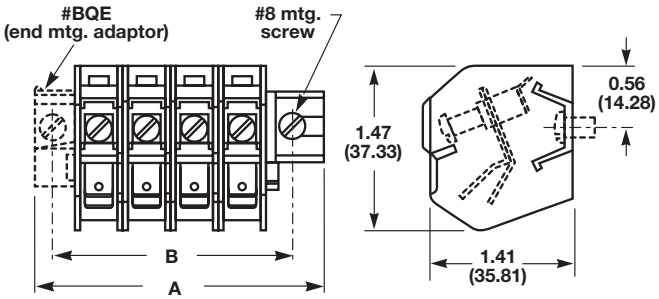

A	B
(N+2) x 0.437	(N+1) x 0.437
N = Number of circuits	

BQQ41

SPECIFICATIONS:
Rating: 30A, 600V
Center Spacing: 0.437" (11.10mm)
Number of Poles: 1
Circuits Per Foot: 24
Wire Range: For use with quick connect terminals only.
Quick Connects: 0.250" x 0.031"
Mounting Options: Base Mount, Stackable; End Piece (Part No. BQE) is required for mounting. Mounting screws recommended every 8 circuits.
Operating Temperature: 105°C
Agency Information: UL File E62622, CSA File 15364

BQE
End Mounting Adapter Required

Dimensions - in (mm)

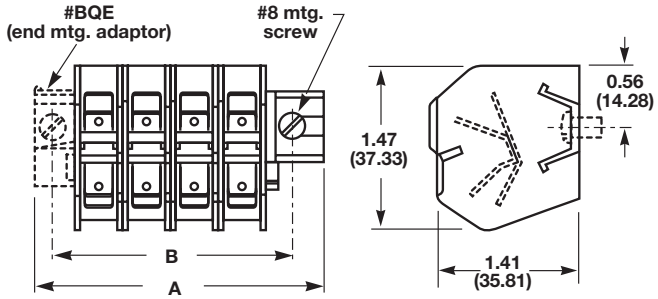

A	B
(N+2) x 0.437	(N+1) x 0.437
N = Number of circuits	

Base Mount Terminal Blocks

KT3

SPECIFICATIONS:
Rating: 40A, 600V
Center Spacing: 0.390" (9.91mm)
Number of Poles: 3
Circuits Per Foot: 28
Circuit Jumper: JN3, 2 circuits
Wire Range: AWG #8-22 CU
Screw Size: #8-32
Mounting Options: Base Mount, Stackable
Marking Tape: MT12-1-2
Torque Rating: 18 lb-in
Operating Temperature: 105°C
Agency Information: UL File E62622, CSA File 15364

KAD
End Mount Adapter Required
KT3-A01 includes KAD

Dimensions - in (mm)

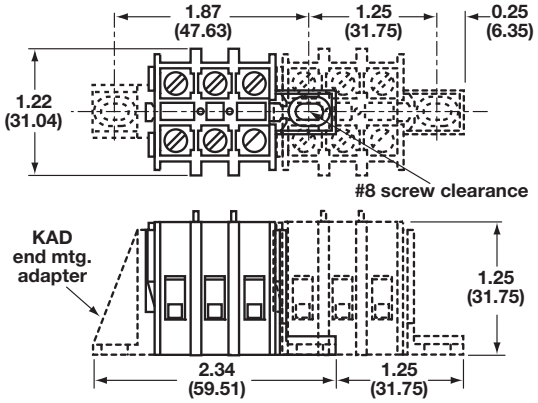

KT4

SPECIFICATIONS:
Rating: 30A, 600V
Center Spacing: 0.25" (6.35mm)
Number of Poles: 4
Part Number:
- KT4-WH-A
- KT4-WH-B

Note: When used in series must order A and B

Circuits Per Foot: 48
Circuit Jumper: JN4, 4 circuits
Wire Range: AWG #10-22 CU
Screw Size: #6-32
Mounting Options: Base Mount
Mounting screws recommended every 12 circuits
Marking Tape: MTC6
Torque Rating: 18 lb-in
Operating Temperature: 105°C
Agency Information: UL File E62622, CSA File 15364

Dimensions - in (mm)

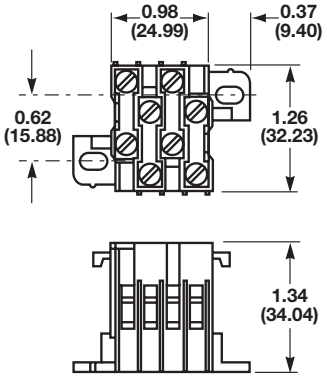

PLK3

SPECIFICATIONS:
Rating: 40A, 600V
Center Spacing: 0.39" (9.91mm)
Number of Poles: 3
Circuits Per Foot: 28
Circuit Jumper: JN3, 2 circuits
Wire Range: AWG #8-22 CU
Screw Size: #8-32
Mounting Options: Base Mount, Stackable; End Piece (Part No. KAD) is required for mounting. Mounting screws recommended every 15 circuits.
Marking Tape: MT12-1-2
Torque Rating: 18 lb-in
Operating Temperature: 105°C
Agency Information: UL File E62622

Dimensions - in (mm)

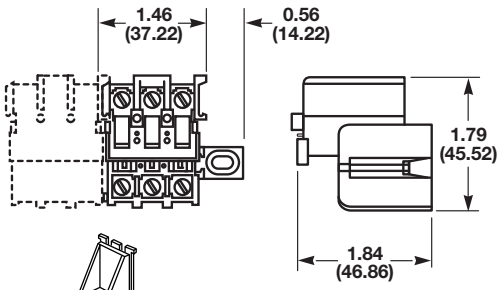

KAD
End Mount Adapter Required

Series 15188

Disconnect Terminal Blocks for 35mm DIN Rail Mount

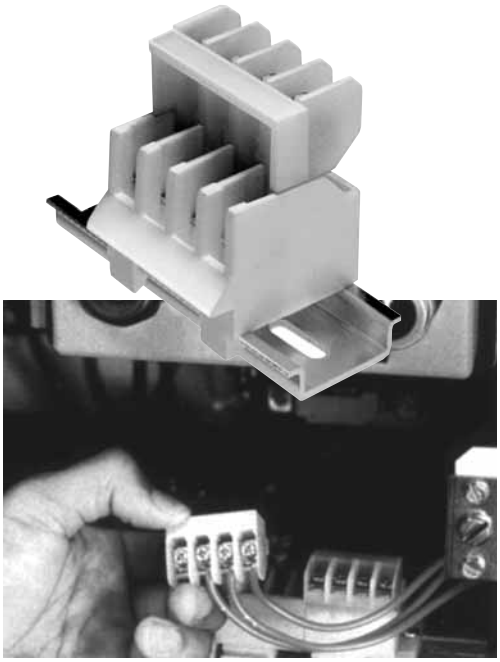

SPECIFICATIONS
Rating: 30A, 600V*
Center Spacing: 0.375" (9.52mm)
Wire Range: #12-16 AGW CU
Screw Size: #6-32 zinc-plated philslot
Number of Poles: 3- and 4-pole only
Mounting: 35mm DIN Rail
Optional End Stop NDNAS
Jumpers: 2- through 4-pole available
Materials: Molded Base: UL rated 94V-2 thermoplastic.
Tin plated copper alloy contacts.
Torque Rating: 12 lb-in
Operating Temperature: 105°C
Agency Information: UL File E62622, CSA File 47235

* 30A rating achieved with #10AWG wire crimped to ring terminal; 25A without.

Dimensions - in (mm)

IN-LINE WIRING DIRECTION

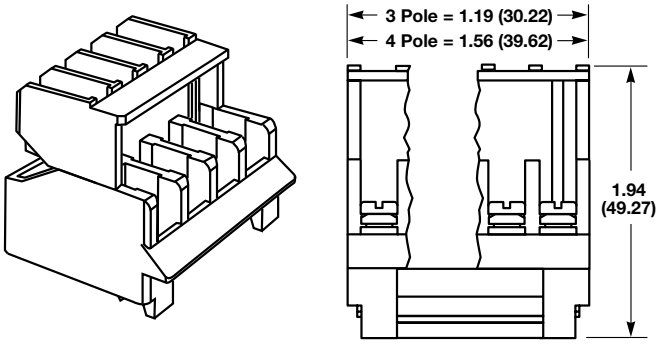

REVERSE WIRING DIRECTION

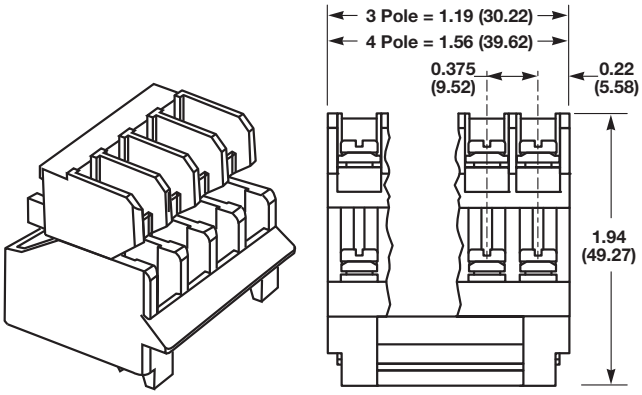

Part Numbering System

Series		Poles	Wiring	
15188	–	☐	☐	☐
		3 to **4**	**blank** - inline **R** - reverse	**S** - locking snap

15288 Series

Disconnect Terminal Blocks
for DIN Rail Mount

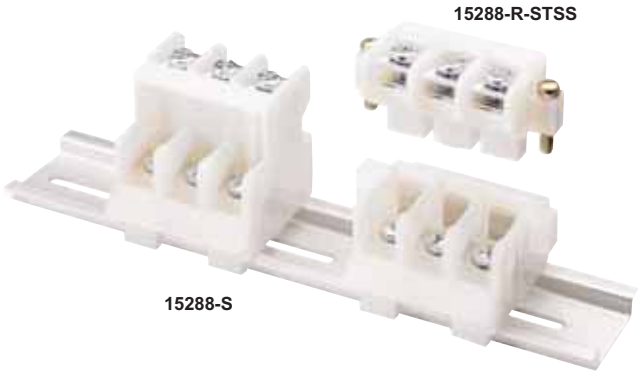

SPECIFICATIONS
Rating: 65A, 600V*
Center Spacing: 0.54" (13.7mm)
Wire Range: #6-16 AWG
Screw Size: #8-32 zinc-plated philslot
Number of Poles: 3-pole only
Mounting: 35mm DIN Rail
Optional Accessories: Optional End Stop NDNAS (order optional accessories seperately)
Materials: Molded Base: UL rated 94V2 thermoplastic. Tin-plated copper alloy contacts.
Torque Rating: 20 lb-in (30 lb-in for 8AWG bare wire)
Operating Temperature: 105°C (221°F)
Agency Information: UL File E62622

*CSA rating achieved with #6AWG wire crimped to ring terminal 50A without.

Dimensions - in (mm)

REVERSE WIRING DIRECTION

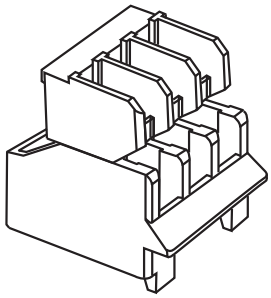

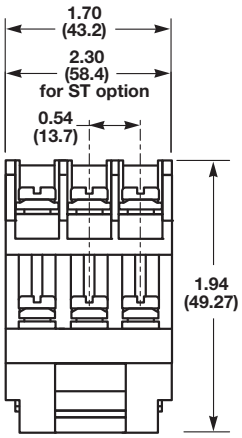

INLINE WIRING DIRECTION

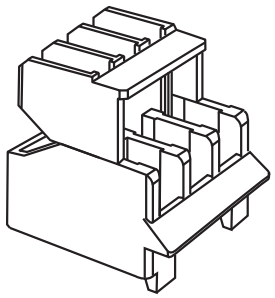

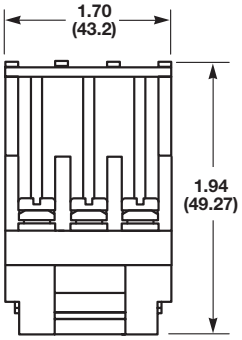

Part Numbering System

Series	Wiring	Options
15288	☐	☐☐☐☐
	blank - inline **R** - reverse	**S** - snap **ST** - screw together **SS** - solid DIN rail snap

COOPER Bussmann

Series KU

Base Mount Double Row Terminal Blocks

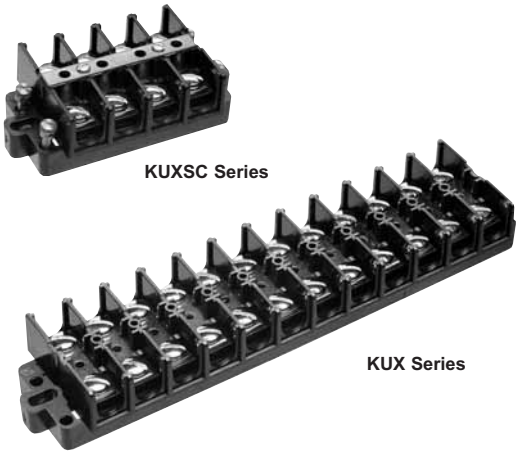

SPECIFICATIONS
Rating: 60A, 600V*
Center Spacing: 0.625" (15.88mm)
Number of Poles: 2- to 12-poles
Wire Range: #6-22 AWG CU
Screw Size: #10-32
Torque Rating: 20 lb-in.
Distance Between Barriers: 0.437" (11.09mm)
Mounting: Base mount
Material: Molded base: Black, UL rated 94V1 Nuclear Grade Noryl
Terminal plating: Nickel over brass
Operating Temperature: 105°C max.
Agency Information: UL File E62622, CSA File 47235

* 60A rating achieved with #6 copper wire crimped to ring terminal.

Poles	KU A	KU B	KUX only A
02	2.50	1.62	2.00
03	3.12	2.25	2.62
04	3.75	2.87	3.25
05	4.37	3.50	3.87
06	5.00	4.12	4.50
07	5.62	4.75	5.12
08	6.25	5.37	5.75
09	6.87	6.00	6.37
10	7.50	6.62	7.00
11	8.12	7.25	7.62
12	8.75	7.87	8.25

* Dimensions in inches. To convert to millimeters, multiply by 25.4.

Dimensions - in (mm)

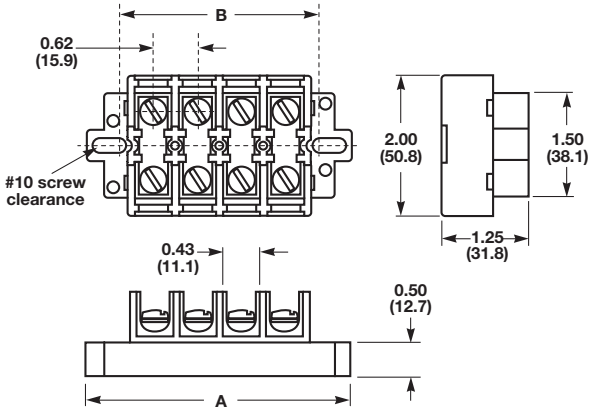

Part Numbering System

Series

K U ☐ ☐ ☐

KU - standard block
KUX - short block
KURL - standard w/removable link
KUXRL - short block w/removable link

Poles

☐ ☐

02 to **12**

Screw Options

☐ ☐

00 - screws shipped bulk
W - brass washer head, nickel-plated
P - steel screw w/pressure plate zinc-plated
B - brass washer head, no plating
BP - brass philslot, nickel-plated

Covers

☐ ☐

WC - top cover & 2 end plates

Marking Strip

☐ ☐ ☐

MT - matte finish - white
NU - numbered 1 to 12, horizontal
NUV - numbered 1 to 12, vertical
PT - marker strip for cover

Part Numbering System - SC Series

KUSC - standard w/shortring strap & 4 shorting screws
KUXSC - short block w/shorting strap & 4 shorting screws

02 to **12**

00 - screws shipped bulk
W - brass washer head, nickel-plated
P - steel screw w/pressure plate zinc-plated
B - brass washer head, no plating
BP - brass philslot, nickel-plated

WC - top cover & 2 end plates

PT - marker strip for cover

Accessories

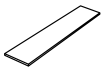

MTMU##
Molded Marking Tape - Matte Finish

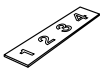

NUM##
Molded Marking Tape

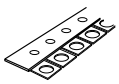

JU12
Jumper - 12 Circuits

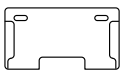

NUE
End Piece for NUC

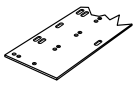

NUC##
Cover

Series 11675

Quick-Connect Power Distribution Blocks

SPECIFICATIONS
Rating: 40A, 250V
Poles: 2- to 6-poles with (3) 0.25" quick-connect terminals per pole
Wire Range: #8-14 AWG CU
Torque Rating: 18 lb-in.
Operating Temperature: 150°C
Design: Screw connections for field wiring. Quick connects reduce cost of internal wiring.
Agency Information: UL File E62622, CSA File 47235

Part Number	A	B	C	D
11675-2	2.09	1.68	0.56	1.15
11675-3	2.66	2.25	1.12	1.71
11675-4	3.22	2.81	1.68	2.28
11675-5	3.78	3.37	2.25	2.84
11675-6	4.34	3.93	2.81	3.40

* Dimensions in inches. To convert to millimeters, multiply by 25.4.

Dimensions - in (mm)

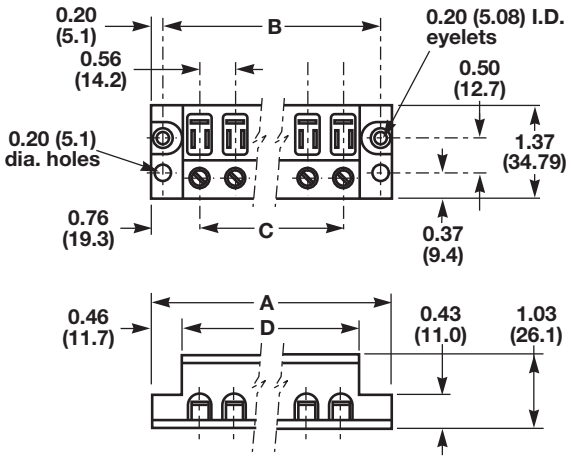

Series 11725

Quick-Connect Power Distribution Blocks

SPECIFICATIONS
Rating: 70A, 600V
Poles: 2-, 3- or 4-poles with (4) 0.25" quick-connect terminals per pole
Wire Range: #2-14 AWG CU / #2-8 AWG AL
Torque Rating: 45 lb-in.
Operating Temperature: 150°C
Design: Screw connections for field wiring. Quick connects reduce cost of internal wiring.
Agency Information: UL File E62622, CSA File 47235

Part Number	A	B	C	D
11725-2	2.50	2.06	0.68	1.37
11725-3	3.18	2.75	1.37	2.06
11725-4	3.87	3.43	2.06	2.75

* Dimensions in inches. To convert to millimeters, multiply by 25.4.

Dimensions - in (mm)

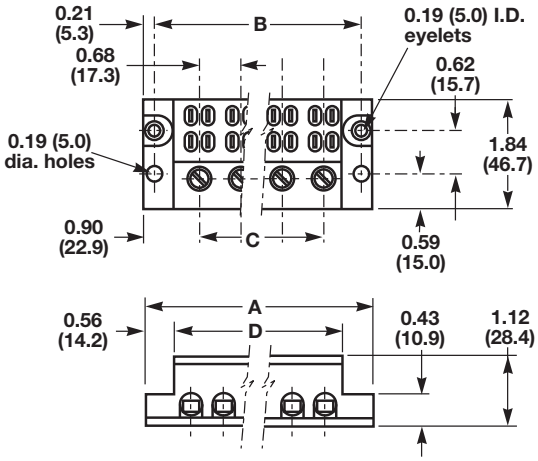

Series 14002
Barrier Terminal Blocks

SPECIFICATIONS
Rating: 115A, 600V
Poles: 2- to 6-poles
Wire Range: #2-14 AWG CU / #2-8 AWG AL
Torque Rating: 2-3, 50 lb-in; 4-6, 45 lb-in; 8, 40 lb-in; 10-14, 35 lb-in.
Operating Temperature: 150°C
Marking: Marking strip optional, consult factory.
Options: CP = pressure plate, rated 60A, 600V
Q = quick-connect, rated 50A, 600V
To order enter letter code in front of part number: ie; CP14002-2
Agency Information: UL File E62622, CSA File 47235

Dimensions - in (mm)

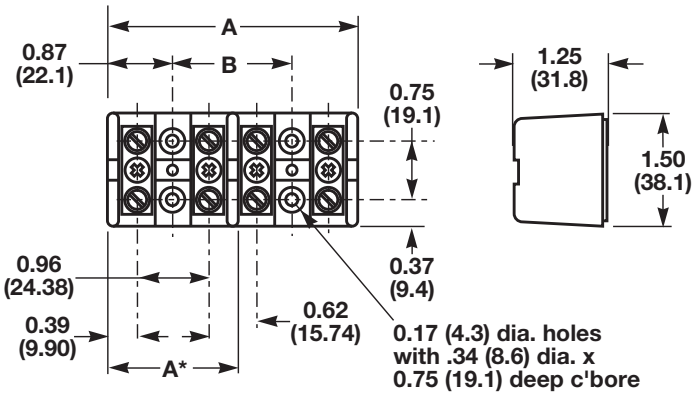

Part Number	A	B
14002-2	1.75	–
14002-3	2.37	–
14002-4	3.34	1.59
14002-5	3.96	2.21
14002-6	4.59	2.84

* Dimensions in inches. To convert to millimeters, multiply by 25.4.
Note: "A" dimension for 14002-2 & 14002-3 only. (14002-2 & 14002-3 have only two mounting holes.)

Series 14004
Dead Front Terminal Blocks

SPECIFICATIONS
Rating: 90A, 600V
Poles: 2- to 12-poles
Wire Range: #4-14 AWG CU / #4-8 AWG AL
Torque Rating:

Cu AWG	AL AWG	Lb-in
4-6	4-6	35
8	8	25
10-14	10-12	20
16-18*	–	20

*Solid conductor only
Operating Temperature: 75°C
Marking: Marking strip optional, consult factory.
Agency Information: UL File E62622, CSA File 47235

Dimensions - in (mm)

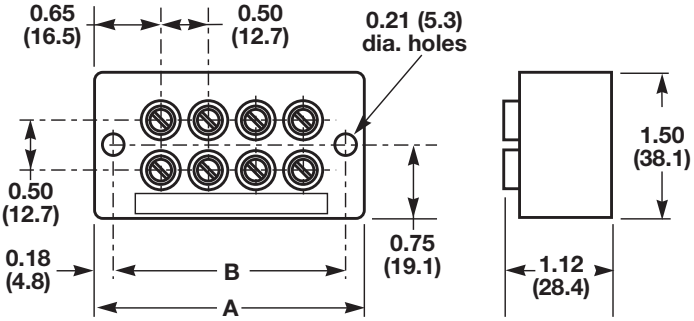

Part Number	A	B
14004-2	1.81	1.43
14004-3	2.31	1.93
14004-4	2.81	2.43
14004-5	3.31	2.93
14004-6	3.81	3.43
14004-7	4.31	3.93
14004-8	4.81	4.43
14004-9	5.31	4.93
14004-10	5.81	5.43
14004-11	6.31	5.93
14004-12	6.81	6.43

* Dimensions in inches. To convert to millimeters, multiply by 25.4.

Series 160, 162, 163 & 165

Splicer Terminal Blocks

SPECIFICATIONS

Rating: To 620A, 600V; UL/CSA. See table.
Materials: Molded material: Black, UL rated 94V0 thermoplastic
Operating Temperature: 150°C
Marking: Marker strip is optional, consult factory.
Agency Information: UL 221592; General Industrial Class per UL 1059; CSA LR053787; CE Certified
Covers: See page 134

Part Number	Line Connection	Load Connection	Connector Material & Ampacity	Agency Approvals
*16000	2/0-#8CU-AL	2/0-#8CU-AL	AL-175A	UL –
*16003	250k cmil-#6CU only	250k cmil-#6CU only	CU-255A	UL –
*16005	350k cmil-#6CU/AL	350k cmil-#6CU/AL	AL-310A	UL –
16200	#2-#14CU, #2-#8AL	#2-#14CU, #2-#8AL	AL-115A	UL/CSA
16201	1/0-#14CU Only	1/0-#14CU Only	CU-150A	UL/CSA
16204	2/0-#8CU-AL	2/0-#8CU-AL	AL-175A	UL/CSA
16301	250cmil-#6CU Only	250cmil-#6CU Only	CU-255A	UL/CSA
16303	350cmil-#6CU/AL	350cmil-#6CU/AL	AL-310A	UL/CSA
16306	500cmil-#6CU/AL	500cmil-#6CU/AL	AL-380A	UL/CSA
16500	(2)350cmil-#4CU/AL	(2)350cmil-#4CU/AL	AL-620A	UL/CSA
16504	(2)500Mcmil-#6CU/AL	(2)500Mcmil-#6CU/AL	AL-760A	UL/CSA

* 160 Series Bases have mounting holes outside the barriers. Other bases (162 through 165) have mounting holes within barriers. See dimensional drawings.
(2)Openings per pole.

160 Series only

No. of Poles	A	B
2	4.12	3.62
3	5.37	4.87
4	6.62	6.12

Dimensions - in

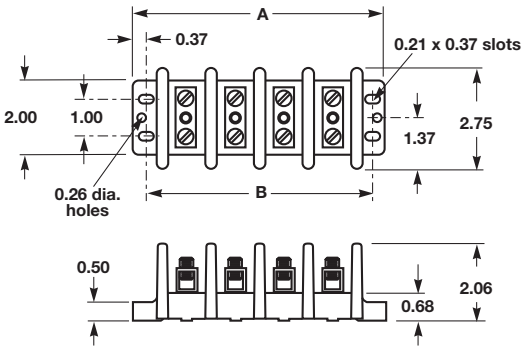

Series	A	B	C 1-pole	C 2-pole	C 3-pole
162	2.87	2.25	1.06	1.87	2.68
163	4.00	3.37	1.98	3.60	5.21
165	5.50	4.75	3.12	5.81	8.50

Series	D	E	F	G	H	J
162	1.75	0.81	0.53	0.31	0.84	0.31
163	3.32	1.62	0.97	0.31	0.87	0.35
165	3.12	2.68	1.56	0.37	1.37	0.62

Dimensions - in

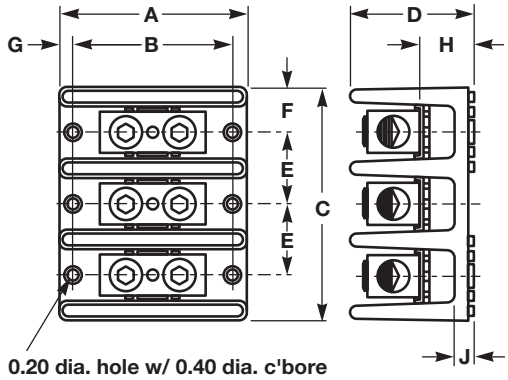

162 Series

Dimensions - in

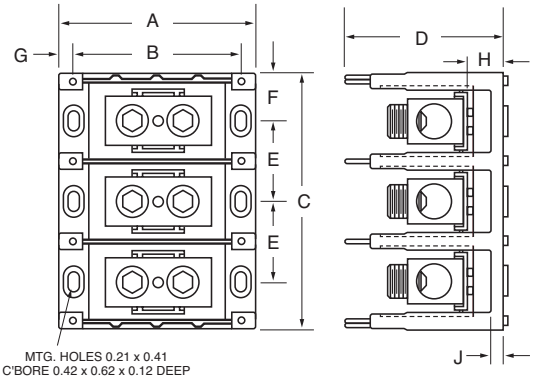

163 Series

Series PDBFS

Power Distribution Blocks

Feature/Benefits

- Enclosed, safer installation; IP-20 finger-safe under specific conditions
- High Short-Circuit Current Ratings up to 200,000A: PDBs do not have to be the weak link in achieving high SCCR for an industrial control panel
- Small footprint saves panel space
- Listed to UL1953 which has minimum spacing requirements at 600V of at least 1" through air and 2" over surface required for feeders in UL UL508A Industrial Control Panels
- For 2D CAD drawings visit www.cooperbussmann.com

Agency/Standards

- UL Listed 1953, Guide QPQS, File E256146
- CSA Certified, Class 6228-01, File 15364
- CE component IEC 60947-7-1
- IEC 60529, IP-20 (Finger Safe) under specific wiring conditions

Electrical

- 600Vac or dc (UL 1953), 690Vac or dc (IEC)
- IP-20 Finger Safe under specific conditions
- Short-Circuit Current Ratings up to 200,000kA, see table
- Ampacities up to 760 Amps
- CU Wire range 14 AWG to 500 kcmil or 2.5 to 240 mm²

Mechanical

- DIN rail or panel mount; PDBFS330 & PDBFS504 panel mount only
- Captive termination screws; screws do not get misplaced
- Wire ready: captive termination screws shipped backed out to save time on conductor installations
- Sliding DIN rail latch for easy mounting
- Single pole, gang mountable for multiple pole applications with interlocking dovetail accessory (optional)
- Flammability, UL 94V0
- Tin-plated AL connectors suitable for CU conductors
- Elongated hole for panel mounting; easier mounting with greater flexibility in matching up with drilled panel holes
- Part 2A1279: Interlocking dovetail pin accessory
  One pin interlocks two units, two pins to interlock three units
- DIN rail end anchors required to prevent damage to block when torquing

Series PDBFS

		Terminal Copper Conductor Capability			Short-Circuit Current Rating Data						
		Line	Load	Configuration	Conductors		Max Fuse Class & Amp**				
Catalog Number (All Single Pole)	Amps	Wire Range	Wire Range	Openings per Pole: Line / Load	Line AWG or kcmil	Load AWG or kcmil	J LPJ	T JJS JJN	RK1 LPS-RK LPN-RK	RK5 FRS-R FRN-R	SCCR
PDBFS204	175A	2/0 - 8 AWG 70 - 10 mm²	2/0 - 8 AWG 70 - 10 mm²	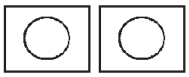	2/0 - 8	2/0 - 8	200	200	100	60	200kA
PDBFS220	175A	2/0 - 8 AWG 70 - 10 mm²	4 - 14 AWG 25 - 2.5 mm²	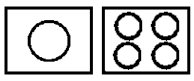	2/0 - 8	4 - 12	200	200	100†	60†	200kA
						4 - 14	175†	175†	100†	60†	100kA
							200†	200†	100†	60†	50kA
PDBFS303	310A	350kcmil - 6 AWG 150 - 16 mm²	350kcmil - 6 AWG 150 - 16 mm²	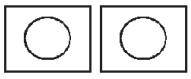	350 - 6	350 - 6	400	400	200	100	200kA
PDBFS330	380A	500kcmil - 6 AWG 240 - 16 mm²	2 - 14 AWG 35 - 2.5 mm²	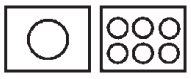	500 - 6	2 - 6	400	400	200†	100†	200kA
						2 - 14	200†	200†	100†	30†	50kA
							175†	175†	100†	30†	100kA
PDBFS377	570A	300kcmil - 4 AWG 150 - 12 mm²	4 - 14 AWG 25 - 2.5 mm²	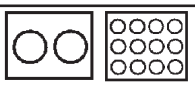	300	4 - 8	600	600	400†	200†	200kA
					300 - 4	4	600†	600†	400†	200†	50kA
						4 - 14	200†	200†	100†	30†	50kA
PDBFS500	620A	350kcmil - 4 AWG 185 - 12 mm²	350kcmil - 4 AWG 185 - 12 mm²	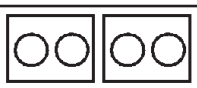	350	350	600	600	400	200	200kA
					350 - 4	350 - 4	600	800	600	200	100kA
PDBFS504	760A	500kcmil - 6 AWG 240 - 16 mm²	500kcmil - 6 AWG 240 - 16 mm²	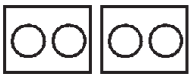	500	500	600	800*	600	400	200kA
							600	800*	600	600	100kA
					500 - 6	500 - 6	600	600	400	200	100kA

Ampacities 75C per NEC® Table 310.16 and UL508A Table 28.1
*Class L 800A (KRP-C 800_SP) or less fuses suitable for this particular SCCR case.
** Class G 60A (SC-60) or less or Class CC 30A (LP-CC-30, FNQ-R-30, KTK-R-30) or less are suitable for all these SCCRs in this table.
† Higher SCCR may be available, check latest datasheet 1149.

Terminal Blocks: Single & Double Row
EuroMag Series
Terminal Blocks: Base & Rail Mount
Power Distribution Blocks
Wire Management Products
Edge Connectors, One-Sided Boards
Compliance References

Series 160, 162, 163 & 165

Power Distribution Blocks

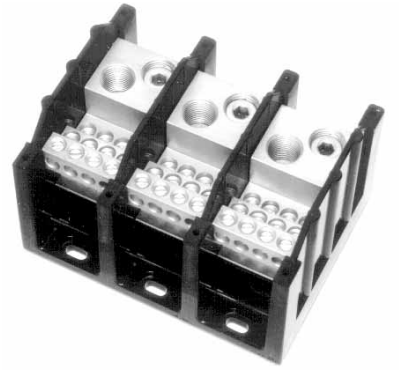

SPECIFICATIONS

Rating: To 840A, 600V; UL/CSA. See table.
Materials: Molded material: Black, UL rated 94V0 thermoplastic
Operating Temperature: 150°C
Marking: Marker strip is optional, consult factory.
Agency Information: UL 221592; General Industrial Class per UL 1059; CSA LR053787; CE Certified
Covers: See page 134

Part Number	Line Connection	Load Connection	Connector Material & Ampacity	Agency Approvals
*16021	2/0-#14CU,2/0-#8AL	(6)#4-14CU, #4-#8AL	AL-175A	UL/CSA
*16023	350kcmil-#6CU/AL	(6)#4-14CU, #4-#12AL	AL-310A	UL/CSA
16220	2/0-#14CU, 2/0-#8AL	(4)#4-14CU, #4-#8AL	AL-175A	UL/CSA
16321	2/0-#14CU, 2/0-#8AL	(6)#4-14CU, #4-#8AL	AL-175A	UL/CSA
16323	350kcmil-#6CU/AL	(6)#4-14CU, #4-#12AL	AL-310A	UL/CSA
16325	(2)2/0-#14CU, 2/0-#8AL	(6)#4-14CU, #4-#8AL	AL-350A	UL/CSA
16330	500kcmil-#6CU/AL	(6)#2-#14CU, #2-#12AL	AL-380A	UL/CSA
16332	350kcmil-#6CU/AL	(3)#2-#14CU,#2-#8AL (2)1/0-#14CU, 1/0-#8AL	AL-310A	UL/CSA
16335	500kcmil-#6CU/AL	(3)#2-#14CU, #2-#8AL (2)1/0-#14CU, 1/0-#8AL	AL-380A	UL/CSA UL/CSA
16370	350kcmil-#6CU/AL	(12)#4-#14CU, #4-#12AL	AL-310A	UL/CSA
16371	350kcmil-#6CU/AL	(6)#2-#14CU, #2-#8AL (3)1/0-#14CU, 1/0-#8AL	AL-310A	UL/CSA
16372	350kcmil-#6CU/AL	(21)#10-#14CU, #10AL	AL-310A	UL/CSA
16373	350kcmil-#6CU/AL	(3)1/0-#14CU/AL (14)#10-#14CU, #10AL	AL-310A	UL/CSA
16375	600kcmil-#2CU/AL	(12)#4-#14CU, #4-#12AL	AL-420A	UL/CSA
16376	600cmil-#2CU/AL	(6)#2-#14CU, #2-8AL (3)#1/0-#14CU, 1/0-#8AL	AL-420A	UL/CSA
16377	(2)300kcmil-#4CU/AL	(12)#4-#14CU, #4-#12AL	AL-570A	UL/CSA
16528	(2)600kcmil-#2CU/AL	(4)3/0-#6CU/AL (4)#4-#14CU/AL	AL-840A	UL/CSA
16530	(2)500kcmil-#6CU/AL	(12)#4-#14CU/AL	AL-760A	UL/CSA

* 160 Series Bases have mounting holes outside the barriers. Other bases (162 through 165) have mounting holes within barriers. See dimensional drawings.
() Openings per pole.

160 Series only

No. of Poles	A	B
2	4.12	3.62
3	5.37	4.87
4	6.62	6.12

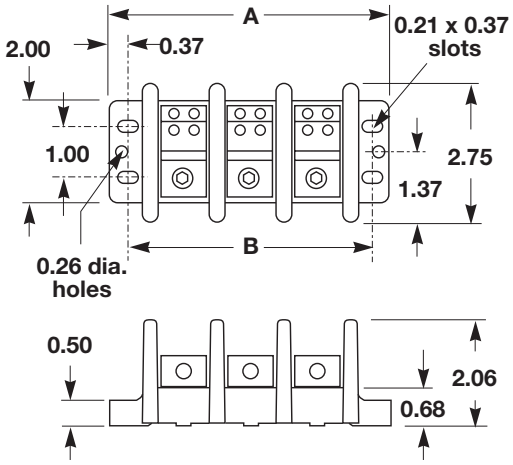

Series	A	B	C 1-pole	C 2-pole	C 3-pole
162	2.87	2.25	1.06	1.87	2.68
163	4.00	3.37	1.98	3.60	5.21
165	5.50	4.75	3.12	5.81	8.50

Series	D	E	F	G	H	J
162	1.75	0.81	0.53	0.31	0.84	0.31
163	3.32	1.62	0.97	0.31	0.87	0.35
165	3.12	2.68	1.56	0.37	1.37	0.62

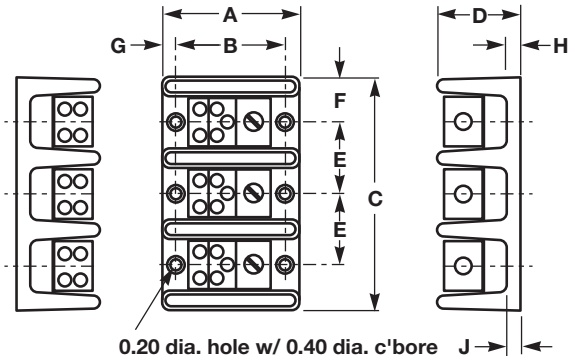

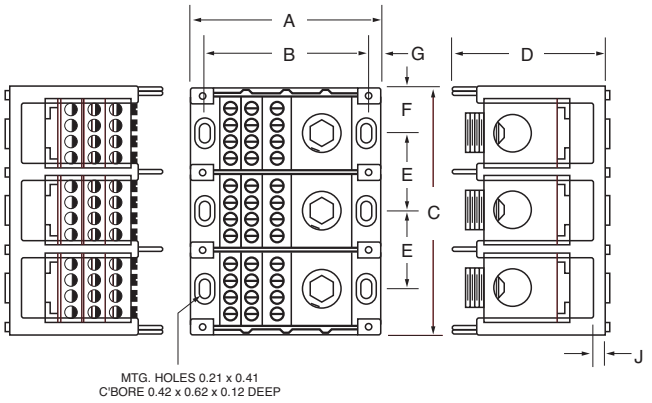

Series 162, 163 & 165

Connector/Stud Power Distribution Blocks

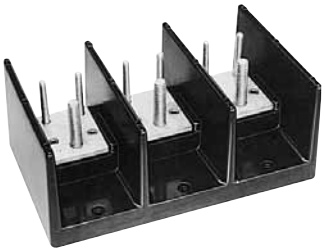

SPECIFICATIONS

Rating: To 760A, 600V; UL/CSA. See table.
Materials: Molded material: Black, UL rated 94V0 thermoplastic
Operating Temperature: 150°C
Marking: Marker strip is optional, consult factory.
Agency Information: UL 221592; General Industrial Class per UL 1059; CSA LR053787; CE Certified
Covers: See page 134

Part Number	Line Connection	Load Connection	Connector Material & Ampacity	Agency Approvals
Connector to Stud				
16280	2/0-#14CU/AL	1/4-20x3/4 Stud	AL-175A	UL
16281	2/0-#14CU/AL	1/4-20 Tapped hole	AL-175A	UL
16378	500kcmil-#6CU/AL	(2)1/4-20x1 Stud	AL-380A	UL/CSA
16383	500kcmil-#6CU/AL	(1)3/8-16x1 Stud	AL-380A	UL/CSA
16582	(2)500lcmil-#6CU/AL	(2)3/8-16x1 5/8 Stud	AL-760A	UL/CSA
Stud to Stud				
16290	1/4-20x3/4 Stud	1/4-20x3/4 Stud	Cu-175A	UL
16390	3/8-16x1 1/8 Stud	3/8-16x1 1/8 Stud	CU-250A	UL/CSA
16394	1/2-13x1 1/16 Stud	1/2-13x1 1/16 Stud	CU-400A	UL/CSA
16395	3/8-16x1 7/16 Stud	(2)1/4-20x 9/16 Stud	CU-310A	UL/CSA
16591	3/8-16x1 7/16 Stud	(2)3/8-16x1 7/16 Stud	CU-400A	UL/CSA
16593	1/2-13x1 Stud	1/2-13x1 Stud	CU-600A	UL/CSA

(1) Openings per pole.

Series	A	B	C 1-pole	C 2-pole	C 3-pole
162	2.87	2.25	1.06	1.87	2.68
163	4.00	3.37	1.98	3.60	5.21
165	5.50	4.75	3.10	5.79	8.48

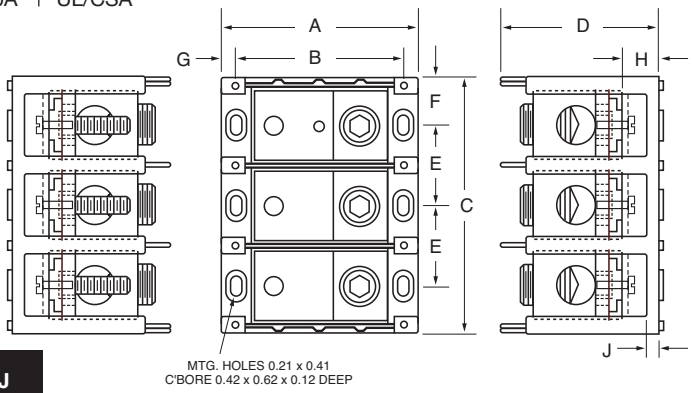

Series	D	E	F	G	H	J
162	1.75	0.81	0.53	0.31	0.84	0.31
163	3.32	1.62	0.97	0.31	0.87	0.35
165	2.93	2.68	1.55	0.37	1.19	0.44

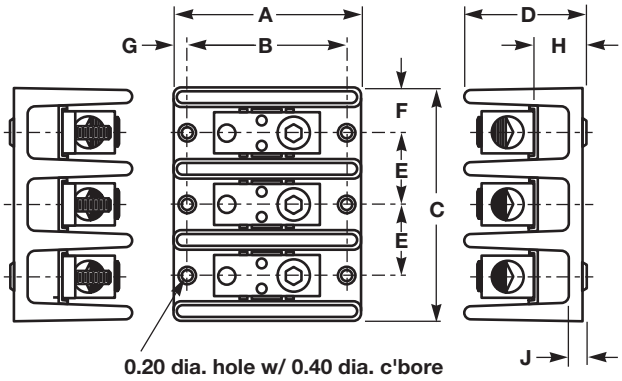

Series EN

Power Blocks
1.78" Centers

SPECIFICATIONS
Rating: 285A, 600V; UL/CSA
Wire Range: Line Connection: #300MCM-#4 CU/AL
Load Connection: (6) #6-14AWG CU
(6) #8-14 AWG AL
Material: Molded material; Black, UL rated 94V2 thermoplastic
Poles: 1-3
Operating Temperature: 125°C
Torque Rating: 200 lb-in. line terminal, 20 lb-in. load terminal
Agency Information: UL File E62622, CSA File 47235
Covers: Not available

Series	A	B
EN61- (1-pole)	1.38	1.78
EN62- (2-pole)	3.15	3.62
EN63- (3-pole)	4.93	5.37

Dimensions - in (mm)

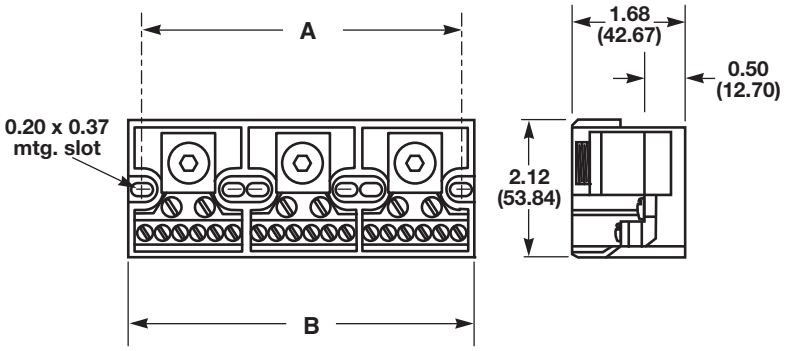

Covers (160, 162, 165 Series)

Part Numbering System

Series

C P B ☐ ☐ ☐ – ☐

160
162
165

1 - One Pole Block (162, 165 Series only)
2 - Two Pole Block
3 - Three Pole Block
4 - Four Pole Block (160 Series only)

Covers (163 Series)

Part Numbering System

Series

C P D B – ☐

1 - One Pole Block
2 - Two Pole Block
3 - Three Pole Block

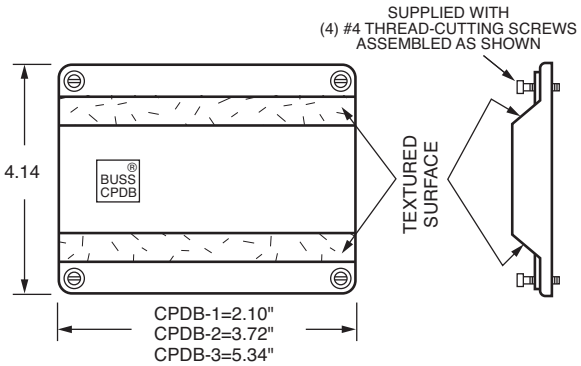

Clear with write on surface

Photo Control Receptacle Series

Wire Management Products

- 3-pole, 3-wire receptacles for plug-in, locking type photo controls used in outdoor areas and roadway lighting.
- Receptacle configuration, terminals and limiting dimensions are in accordance with Figure 3 of EE Pub. No. TDJ-146, NEMA Pub. No. SH 16-1962 and UL 773.
- Wire types and sizes ranging from #12 AWG through 16 AWG rated at 600V with temperature ratings from 105° to 200°C. Consult factory for other wire colors.
- Hook-up wires are an integral part of the assembly with lengths furnished to customer specification.
- UL Recognized under file E65288 for a rating of 1kW or 1800VA for potentials up to 480V.
- CSA certified under file LR21295 for 15 amps at 125V.
- CE Certified.

Dimensions - in

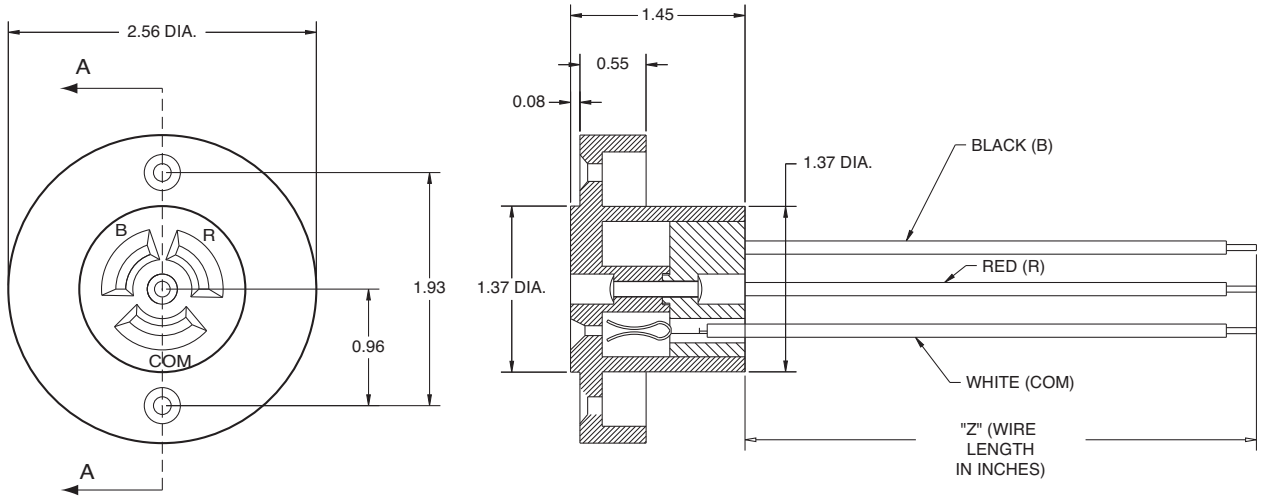

Part Numbering System

Series		Terminal Type	Wire Type	Wire Gauge	Wire Length
1 3 6 6 1	-	W	☐	☐☐	☐
		W - wire	See Table I	See Table II	Dimension "Z"* * Min 4"

TABLE I (Wire Type)

Ass'y No.	Wire Description
13661-W1XX	Min. of 26 Strands, Copper Conductor, 125°C-600V Crosslinked Polyethylene.
13661-W2XX	Min. of 26 Strands, Copper Conductor, Silicone Rubber Insulation and Fiber Glass Braid Jacket, Nec. Type SFF-2(150°C)
13661-W3XX	Min. of 26 Strands, Copper Conductor, Type TW, 105°C-600V Insulation (16 gauge only)
13661-W4XX	Min. of 7 Strands, Copper Conductor of 0.0192 Silicone Rubber Insulation and Fiber Glass Braid Jacket, Nec. Type SF-2 (200°C)
13661-W5XX	Min of 19 Strands, Copper Conductor, Type AWM. 105°C-600V Insulation

TABLE II (Wire Gauge)

Ass'y No.	Wire Gauge
13661-W2XX	12 Gauge
13661-W4XX	14 Gauge
13661-W6XX	16 Gauge

Terminal Blocks: Single & Double Row
EuroMag Series
Terminal Blocks: Base & Rail Mount
Power Distribution Blocks
Wire Management Products
Edge Connectors, One-Sided Boards
Compliance References

Stud Type Junction Blocks

(Non-Feed Thru)

Series C4559 & C6083

SPECIFICATIONS

Rating: 30A, 600V
Operating Temperature: 250°F (120°C)
Standards: 2 to 16 steel studs with #10-24 threads on 0.750" centers and a "dog point" to guide nut onto thread.
Torque Rating: 20 lb-in (25 lb-in).
Marking: Numbers and arrows molded on top of barriers indicate terminals.
Agency Information: CSA File 15364

Dimensions - in (mm)

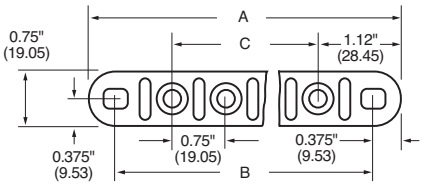

0ther series available with 0.750" centers:

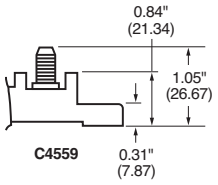

Mtg. holes 9/32"x 3/8" slot

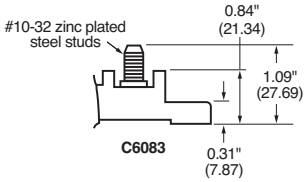

(A,B,C Dimensions are the same as C4559)

Part No.-Poles	A	B	C
C4559-2	3.00 (76.2)	2.25 (57.1)	0.75 (19.0)
C4559-3	3.75 (95.2)	3.00 (76.2)	1.50 (38.1)
C4559-4	4.50 (114.3)	3.75 (95.2)	2.25 (57.1)
C4559-5	5.25 (133.3)	4.50 (114.3)	3.00 (76.2)
C4559-6	6.00 (152.4)	5.25 (133.3)	3.75 (95.2)
C4559-7	6.75 (171.4)	6.00 (152.4)	4.50 (114.3)
C4559-8	7.50 (190.5)	6.75 (171.4)	5.25 (133.3)
C4559-9	8.25 (209.5)	7.50 (190.5)	6.00 (152.4)
C4559-10	9.00 (228.6)	8.25 (209.5)	6.75 (171.4)
C4559-11	9.75 (247.6)	9.00 (228.6)	7.50 (190.5)
C4559-12	10.50 (266.7)	9.75 (247.6)	8.25 (209.5)
C4559-13	11.25 (285.7)	10.50 (266.7)	9.00 (288.6)
C4559-14	12.00 (308.4)	11.25 (285.7)	9.75 (247.6)
C4559-15	12.75 (323.8)	12.00 (308.4)	10.50 (266.7)
C4559-16	13.50 (342.9)	12.75 (323.8)	11.25 (285.7)

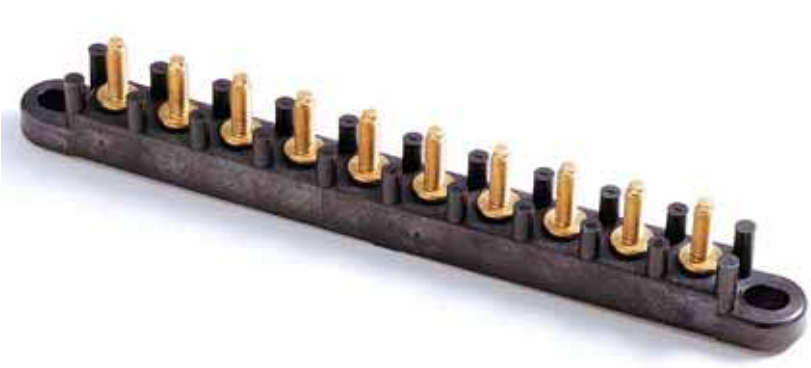

Series C5237 & JB1032

SPECIFICATIONS

Rating: UL: 30A, 300V; CSA: 30A, 600V.
Operating Temperature: 250°F (120°C)
Standards: 1 to 15 brass studs on 0.625" centers with #10-32 thread and a "dog point" to guide nut onto thread.
Torque Rating: 20 lb-in (25 lb-in).
Marking: Numbers and arrows molded on top of barriers indicate terminals.
Agency Information: CSA File 15364

Dimensions - in (mm)

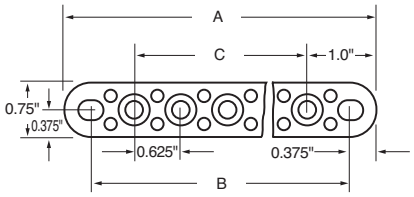

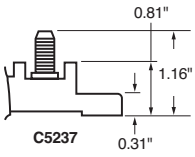

Mtg. holes 9/32"X3/8" slot

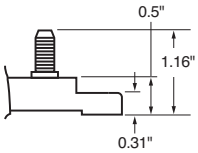

JB1032-120-XX
(No bosses between studs)
(A,B,C Dimensions ars the same as C5237)

Part No.-Poles	A	B	C
C5237-1	2.00 (50.8)	1.25 (31.7)	–
C5237-2	2.62 (66.7)	1.87 (47.5)	0.625 (15.9)
C5237-3	3.25 (82.5)	2.50 (63.4)	1.25 (31.7)
C5237-4	3.87 (98.4)	3.12 (79.4)	1.87 (47.5)
C5237-5	4.50 (114.3)	3.75 (95.2)	2.50 (63.4)
C5237-6	5.12 (130.8)	4.37 (111.1)	3.12 (79.4)
C5237-7	5.75 (146.0)	5.00 (127.0)	3.75 (95.2)
C5237-8	6.37 (161.9)	5.62 (142.9)	4.37 (111.1)
C5237-9	7.00 (177.8)	6.25 (158.7)	5.00 (127.0)
C5237-10	7.62 (193.7)	6.87 (174.6)	5.62 (142.9)
C5237-11	8.25 (209.5)	7.50 (190.5)	6.25 (158.7)
C5237-12	8.87 (225.4)	8.12 (206.4)	6.87 (174.6)
C5237-13	9.50 (241.3)	8.75 (222.2)	7.50 (190.5)
C5237-14	10.12 (257.2)	9.37 (238.1)	8.12 (206.4)
C5237-15	10.75 (273.0)	10.00 (254.0)	8.75 (222.2)

COOPER Bussmann

Stud Type Junction Blocks

SPECIFICATIONS

Material: Studs on non-feed-thrus are steel plated; feed-thrus are copper alloy.
Applications: Heavy-duty ground or power connection points in AC or DC circuits. Feed-thru or stand alone mount options available for transformers, communication and computer power sections along with various vehicle electrical systems.
Benefits: Modular design offers design and manufacturing flexibility.

Suggested Max. Termination Ratings:

Thread/Stud Sz.	Max. Amps
#10	50
#1/4 & M6	100
#5/16	200
#3/8	250
#1/2	400

Dimensions - in (mm)

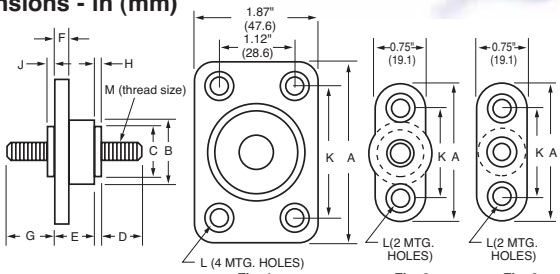

Fig. 1 Fig. 2 Fig. 3

Part	Fig.	A	B	C	D	E	F	G	H	J	K	L	M	Max. Torque (in-lb)	Material	Color
C1925*	1	2.75 (69.8)	1.5 (38.1)	1.25 (31.7)	1.25 (31.7)	1.12 (28.6)	.37 (9.5)	1.12 (28.6)	.19 (4.8)	.19 (4.8)	2.0 (50.8)	.22 dia. w/.44 dia. C'bore x .16 deep	1/2-13	300	Thermoplastic / Zinc-plated Brass	Red
C1925B*	1	2.75 (69.8)	1.5 (38.1)	1.25 (31.7)	1.25 (31.7)	1.12 (28.6)	.37 (9.5)	1.12 (28.6)	.19 (4.8)	.19 (4.8)	2.0 (50.8)	.22 dia. w/.44 dia. C'bore x .16 deep	1/2-13	300	Thermoplastic / Zinc-plated Brass	Black
C1925-1*	1	2.75 (69.8)	1.5 (38.1)	1.25 (31.7)	1.25 (31.7)	1.12 (28.6)	.37 (9.5)	1.12 (28.6)	.19 (4.8)	.19 (4.8)	2.0 (50.8)	.22 dia. w/.44 dia. C'bore x .16 deep	1/2-13	300	Thermoplastic / Tin-plated Brass	Red
C1925-1B*	1	2.75 (69.8)	1.5 (38.1)	1.25 (31.7)	1.25 (31.7)	1.12 (28.6)	.37 (9.5)	1.12 (28.6)	.19 (4.8)	.19 (4.8)	2.0 (50.8)	.22 dia. w/.44 dia. C'bore x .16 deep	1/2-13	300	Thermoplastic / Tin-plated Brass	Black
C1925-2*	1	2.75 (69.8)	1.5 (38.1)	1.25 (31.7)	1.25 (31.7)	1.12 (28.6)	.37 (9.5)	1.12 (28.6)	.19 (4.8)	.19 (4.8)	2.0 (50.8)	.22 dia. w/.44 dia. C'bore x .16 deep	3/8-16	150	Thermoplastic / Tin-plated Brass	Red
C1925-2B*	1	2.75 (69.8)	1.5 (38.1)	1.25 (31.7)	1.25 (31.7)	1.12 (28.6)	.37 (9.5)	1.12 (28.6)	.19 (4.8)	.19 (4.8)	2.0 (50.8)	.22 dia. w/.44 dia. C'bore x .16 deep	3/8-16	150	Thermoplastic / Tin-plated Brass	Black
C1933	1	2.75 (69.8)	1.44 (36.6)	1.25 (31.7)	1.5 (38.1)	1.12 (28.6)	.37 (9.5)	None	.19 (4.8)	None	2.0 (50.8)	.22 dia.	1/2-13	300	Thermoplastic / Zinc-plated Brass	Black
C1933-1	1	2.75 (69.8)	1.44 (36.3)	1.25 (31.7)	1.5 (38.1)	1.12 (28.6)	.37 (9.5)	None	.19 (4.8)	None	2.0 (50.8)	.22 dia.	5/16-18	75	Thermoplastic / Zinc-plated Brass	Black
C1938*	2	2.06 (52.4)	.94 (23.8)	.69 (17.5)	.87 (22.2)	.69 (17.5)	.31 (7.9)	.94 (23.8)	.06 (1.6)	.06 (1.6)	1.31 (33.3)	.22 dia. w/.41 dia. C'bore x 14 deep	3/8-16	150	Thermoplastic / Zinc-plated Brass	Black
C1938R*	2	2.06 (52.4)	.94 (23.8)	.69 (17.5)	.87 (22.2)	.69 (17.5)	.31 (7.9)	.94 (23.8)	.06 (1.6)	.06 (1.6)	1.31 (33.3)	.22 dia. w/.41 dia. C'bore x 14 deep	3/8-16	150	Thermoplastic / Zinc-plated Brass	Red
C1938-1*	2	2.06 (52.4)	.94 (23.8)	.69 (17.5)	.87 (22.2)	.69 (17.5)	.31 (7.9)	.94 (23.8)	.06 (1.6)	.06 (1.6)	1.31 (33.3)	.22 dia. w/.41 dia. C'bore x 14 deep	5/16-18	75	Thermoplastic / Tin-plated Brass	Black
C1938-1R*	2	2.06 (52.4)	.94 (23.8)	.69 (17.5)	.87 (22.2)	.69 (17.5)	.31 (7.9)	.94 (23.8)	.06 (1.6)	.06 (1.6)	1.31 (33.3)	.22 dia. w/.41 dia. C'bore x 14 deep	5/16-18	75	Thermoplastic / Tin-plated Brass	Red
C2791*	3	2.06 (52.4)	.69 (17.5)	.44 (11.2)	.62 (15.9)	.69 (17.5)	.31 (7.9)	.69 (17.5)	.06 (1.6)	.06 (1.6)	1.31 (33.3)	.22 dia. w/.41 dia. C'bore x .14 deep	1/4-20	30	Thermoplastic / Zinc-plated Brass	Black
C2791-R*	3	2.06 (52.4)	.69 (17.5)	.44 (11.2)	.62 (15.9)	.69 (17.5)	.31 (7.9)	.69 (17.5)	.06 (1.6)	.06 (1.6)	1.31 (33.3)	.22 dia. w/.41 dia. C'bore x .14 deep	1/4-20	30	Thermoplastic / Zinc-plated Brass	Red
C2909*	3	2.06 (52.4)	.69 (17.5)	.44 (11.2)	.62 (15.9)	1.0 (25.4)	.31 (7.9)	.69 (17.5)	.06 (1.6)	.06 (1.6)	1.31 (33.3)	.22 dia. w/.41 dia. C'bore x 14 deep	10-32	24	Thermoplastic / Zinc-plated Brass	Black
C2909-1*	3	2.06 (52.4)	.69 (17.5)	.44 (11.2)	.62 (15.9)	1.0 (25.4)	.31 (7.9)	.69 (17.5)	.06 (1.6)	.06 (1.6)	1.31 (33.3)	.22 dia. w/.41 dia. C'bore x 14 deep	1/4-20	30	Thermoplastic / Zinc-plated Brass	Black
C4044*	2	2.06 (52.4)	.87 (22.2)	.62 (15.9)	.62 (15.9)	1.12 (28.6)	.31 (7.9)	.94 (23.8)	.06 (1.6)	.06 (1.6)	1.31 (33.3)	.22 dia. w/.41 dia. C'bore x .14 deep	3/8-16	150	Thermoplastic / Zinc-plated Brass	Black
C4044-1*	2	2.06 (52.4)	.87 (22.2)	.62 (15.9)	.62 (15.9)	1.12 (15.9)	.31 (7.9)	.94 (23.8)	.06 (1.6)	.06 (1.6)	1.31 (33.3)	.22 dia. w/.41 dia. C'bore x .14 deep	3/8-16	150	Thermoplastic / Tin-plated Brass	Black
C4044-1R*	2	2.06 (52.4)	.87 (22.2)	.62 (15.9)	.62 (15.9)	1.12 (15.9)	.31 (7.9)	.94 (23.8)	.06 (1.6)	.06 (1.6)	1.31 (33.3)	.22 dia. w/.41 dia. C'bore x .14 deep	3/8-16	150	Thermoplastic / Tin-plated Brass	Red
C5898*	2	2.06 (52.4)	.94 (23.8)	.69 (17.5)	.87 (22.2)	.69 (17.5)	.31 (7.9)	.94 (23.8)	.06 (1.6)	.06 (1.6)	1.31 (33.3)	.22 dia. w/.41 dia. C'bore x .14 deep	3/8-16	150	Thermoplastic / Zinc-plated Brass	Red
C6344-2	2	2.06 (52.4)	.87 (22.2)	.62 (15.9)	.62 (15.9)	1.12 (15.9)	.31 (7.9)	None	.06 (1.6)	None	1.31 (33.3)	.22 dia. w/.41 dia. C'bore x .14 deep	1/2-20	150	Thermoplastic / Zinc-plated Steel	Black
C7018*	3	2.06 (52.4)	.69 (17.5)	.44 (11.2)	.47 (11.9)	.69 (17.5)	.31 (7.9)	.53 (13.5)	.06 (1.6)	.06 (1.6)	1.31 (33.3)	.22 dia. w/.41 dia. C'bore x 14 deep	M6	55	Thermoplastic / Zinc-plated Steel	Black
C7020*	2	2.06 (52.4)	.94 (23.8)	.69 (17.5)	.88 (22.2)	.69 (17.5)	.31 (8.0)	1.25 (31.8)	.06 (1.6)	.06 (1.6)	1.31 (33.3)	.22 dia. w/.41 dia. C'bore x 14 deep	3/8-16	150	Thermoplastic / Zinc-plated Brass	Red
JB3816-2	2	2.12 (54.0)	.98 (24.9)	.62 (15.9)	.87 (22.2)	.69 (17.5)	.31 (7.9)	None	.06 (1.6)	None	1.37 (34.9)	.22 dia. w/.37 dia. C'bore x .14 deep	3/8-16	150	Thermoplastic / Zinc-plated Sleel	Black
JB3816-3	2	2.12 (54.0)	.98 (24.9)	.62 (15.9)	.87 (22.2)	.69 (17.5)	.31 (7.9)	None	.06 (1.6)	None	1.37 (34.9)	.22 dia. w/.37 dia. C'bore x .14 deep	3/8-16	150	Thermoplastic / Zinc-plated Sleel	Red

*Feed-thru Options – Nuts & washers; consult factory.

Terminal Blocks: Single & Double Row
EuroMag Series
Terminal Blocks: Base & Rail Mount
Power Distribution Blocks
Wire Management Products
Edge Connectors, One-Sided Boards
Compliance References

Series C7021

Power Feed Thru Terminal Block

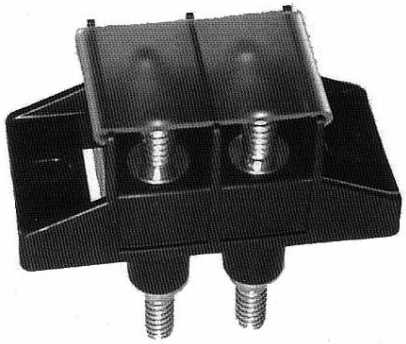

APPLICATIONS

The C7021 terminal block is intended for use in applications requiring up to 175A utilizing a 2-hole compression lug on 5/8" centers. It is ideal for use as an input/output block for telecommunications power panels, or anywhere in which eliminating busbars would be an advantage.

SPECIFICATIONS

Ratings: 175A* per pole, 300V.
Center Spacing: 0.690" (17.5mm)
Wire Range: AWG #2/0-8
Material: UL 94V0 Thermoplastic
Number of Poles: 2- to 6-pole
Bolt Hole Spacing: 0.625" (15.88mm)
Stud: Standard 1/4-20 stud or optional M6 stud.
Mounting: Optional mounting ears.
Stud Material: Brass, Tin-Plated.
Torque Rating: 36 lb-in
Operating Temperature: 130°C
Accessories: Dead-Front covers (CSB7021-XX)
Agency Information: UL File E62622
*175 achieved using both studs in parallel, 115A using a single stud per line.

Dimensions - mm (in)

Part No.	A	B	C	D	E
C7021-01-X			37 (1.45)	49.5 (1.95)	15 (0.6)
C7021-02-X	17.5 (0.69)	-	54.4 (2.14)	67.3 (2.65)	31.8 (1.25)
C7021-03-X	34.9 (1.37)	-	70.9 (2.83)	84.8 (3.34)	49.2 (1.94)
C7021-04-X	52.3 (2.06)	-	89.3 (3.52)	102.2 (4.02)	66.7 (2.63)
C7021-05-X	69.8 (2.75)	-	106.8 (4.20)	119.7 (4.71)	84.2 (3.31)
C7021-06-X	87.2 (3.44)	-	124.2 (4.89)	134.1 (5.40)	101.7 (4.00)
C7021-01N-X					
C7021-02N-X	17.5 (0.69)	36.1 (1.42)	-	-	31.8 (1.25)
C7021-03N-X	34.9 (0.69)	53.5 (2.11)	-	-	49.2 (1.94)
C7021-04N-X	52.3 (2.06)	71.0 (2.80)	-	-	66.7 (2.63)
C7021-05N-X	69.8 (2.75)	88.4 (3.48)	-	-	84.2 (3.31)
C7021-06N-X	87.2 (3.44)	105.9 (4.17)	-	-	101.7 (4.00)

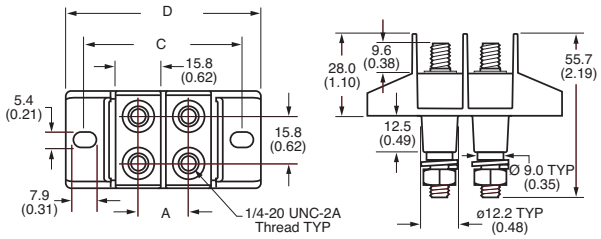

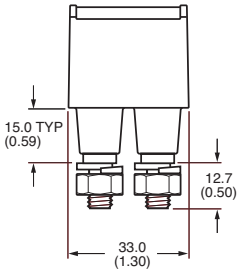

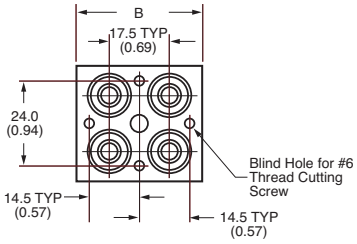

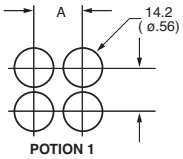

POTION 1

OPTION 1

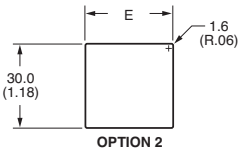

OPTION 2

PANEL CUTOUTS

Part Numbering System

Inches (Millimeters)

Series	Poles	Mount Ends	Studs	Hardware
C 7 0 2 1	— ☐☐	☐	☐☐ —	☐
	01 – 1 pole (2 studs) **02 –** 2 pole (4 studs) **03 –** 3 pole (6 studs) **04 –** 4 pole (8 studs) **05 –** 5 pole (10 studs) **06 –** 6 pole (12 studs)	Blank – Mount ends **N** – No mount ends	Blank – Standard **M6** – M6 studs	Blank – No hardware **0** – Bulk pack, one set **1** – Bulk pack, two sets **2** – Assembled, bottom **3** – Assembled, top **4** – Assembled, both sets

Series C7024

Power Feed Thru Terminal Block

APPLICATIONS

The C7024 terminal block is intended for use in applications requiring up to 115A utilizing a 2-hole compression lug on 3/4" centers. It is ideal for use as an input/output block for telecommunications power panels, or anywhere in which eliminating busbars would be an advantage.

SPECIFICATIONS

Ratings: 115A per pole, 600V.
Center Spacing: 0.75" (19.1mm)
Material: UL 94V0 Thermoplastic
Wire Range: AWG #28
Number of Poles: 1- to 12-poles
Bolt Hole Spacing: 0.75" (19.1mm)
Stud: Standard 1/4-28 stud
Stud Material: Tin-Plated Bronze.
Torque Rating: 36 lb-in
Operating Temperature: 130°C
Agency Information: UL File E62622

Dimensions - mm (in)

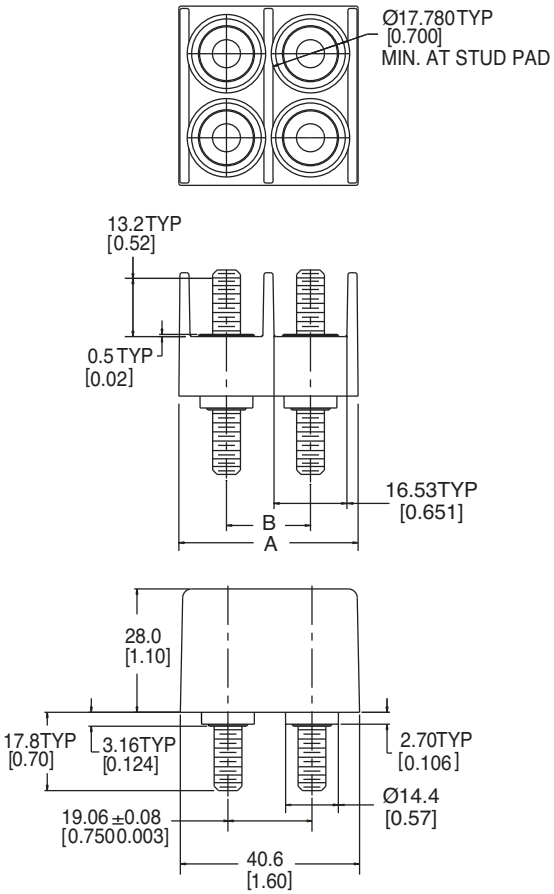

Part Number	"A" Dimension ±0.4(±0.02)	"B" Dimension
C7024-01	21.6(0.85)	-
C7024-02	40.6(1.60)	19.05±0.08(0.750±0.003)
C7024-03	59.7(2.35)	38.10(1.500)
C7024-04	78.7(3.10)	57.15±0.26(2.250±0.010)
C7024-05	97.8(3.85)	76.2(3.00)
C7024-06	116.8(4.60)	95.25±0.26(3.750±0.010)
C7024-07	135.9(5.35)	114.30±0.38(5.250±0/015)
C7024-08	154.9(6.10)	133.35±0.38(5.25±0.015)
C7024-09	174.0(6.85)	152.40±0.38(6.00±0.015)
C7024-10	193.0(7.60)	171.45±0.38(6.750±0.015)
C7024-11	212.1(8.35)	190.50±0.38(7.500±0.015)
C7024-12	231.1(9.10)	209.55±0.38(8.250±0.015)

Part Numbering System

Inches (Millimeters)

Series **Poles**

C 7 0 2 4 — ☐☐

01 – 12

Series 15133

Depluggable PCB Mount Terminal Blocks

15133-06-20-T

SPECIFICATIONS

Rating: 20A, 300V
Center Spacing: 0.375" or 3/8" (9.52mm)
Wire Range: #12-22 AWG
Number of Poles: 7- to 10-poles
PC Board: For soldering to PCB (.00015" tin over copper flash)
Material: Black, UL Rated 94V0 Thermoplastic
Screws: #6-32 zinc-plated steel SEMS
Torque Rating: 12 lb-in
Terminals: 15133-XX-10-X – Tin or gold plated brass
15133-XX-20-X – Nickel-or gold-plated copper alloy plug terminal, tin-or gold-plated female terminal
Operating Temperature: 221°F (105°C)
Agency Information: UL File E62622

APPLICATIONS

The 15133 is a series of input/output circuit board connectors. Available in a 1-piece or 2-piece design, they stack side-by-side with self-aligning housings to prevent incorrect mating. Both designs feature an integral, living hinge cover that saves the labor of attaching a separate cover. The cover provides a dead front for prevention of electrical contact, yet it also has test probe holes for easy circuit testing.

The 1-piece design is for applications not requiring deplugging the connector. It solders to the printed circuit board. Molded stand-offs ensure good solderability.

The 2-piece design enables quick connect and disconnect of several circuits at once. It allows fast board changing in the field without shutting down the entire system. The bottom section of the connector solders to the board. Male contacts are shrouded while the female has stand-offs; both are molded into the block. The top section of the connector plugs into the bottom section.

Dimensions - in (mm)

15133-XX-10-X

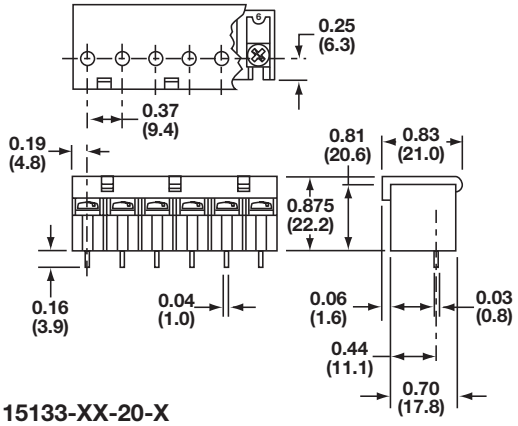

15133-XX-20-X

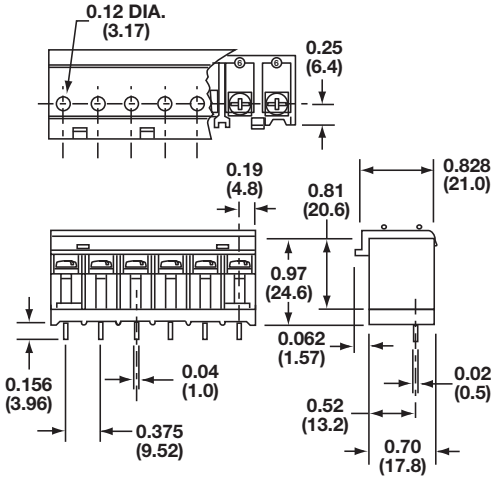

Part Numbering System

Inches (Millimeters)

Series		Poles		Style		Mounting		Terminal Plating
1 5 1 3 3	–	☐☐	–	☐		☐	–	☐
		02 to **10**		**1** - One piece **2** - Two piece		**0** - No mtg. holes		**T** - Tin **G** - Gold*

* Consult Factory

Series 1384X

Edge Connectors –
1 Sided Boards/Vertical Mount

13848-08G02B

13847-08TO2B

SPECIFICATIONS
Rating: 10A, 250V
Center Spacing: 0.375" or 3/8" (9.52mm)
Wire Range: #14-22 AWG CU; entry to PC board at 90° angle.
Number of Poles: 4- to 16-poles
PC Board: Edge contact accepts standard 1/16" (0.0625) PCB.
Contacts: Cantilever design 0.02" thick phosphorus bronze with mating surface tin-plated (0.0002) over copper (0.00005).
Terminals: Pressure plate terminals.
Material: Black, UL Rated 94V0 Thermoplastic (125°C)
Operating Temperature: -55°C to 105°C (212°F)
Agency Information: CSA File 47235

Poles	A	B	C	D
04	2.25	1.87	1.12	1.53
05	2.62	2.25	1.50	1.90
06	3.00	2.62	1.87	2.28
07	3.37	3.00	2.25	2.65
08	3.75	3.37	2.62	3.03
09	4.12	3.75	3.00	3.40
10	4.50	4.12	3.37	3.78
11	4.87	4.50	3.75	4.15
12	5.25	4.87	4.12	4.53
13	5.62	5.25	4.50	4.90
14	6.00	5.62	4.87	5.28
15	6.37	6.00	5.25	5.65
16	6.75	6.37	5.62	6.03

* Dimensions in inches. To convert to millimeters, multiply by 25.4.
Optional polarizing key (Part No. C5971) consult with factory.

Dimensions - in (mm)

13847 Series

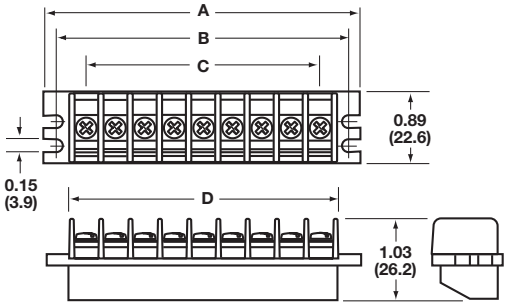

13848 Series

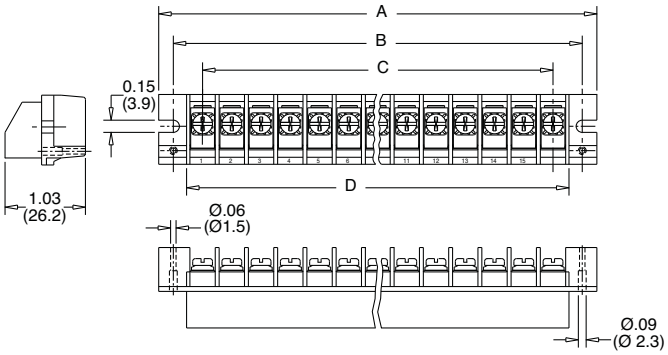

Part Numbering System

Inches (Millimeters)

Series	Block Style		Poles	Terminal Plating	Screw Style	Block Color	Special Options
1 3 8 4	☐	–	☐☐	☐	0 2	B	☐
	7 - Flat mtg. ears w/ 2 slots **8** - Mtg. ears w/2 standoffs with hole for mounting strip		**04** to **16**	**T** - Tin over copper **G** - Gold*	**02** - #6-32 pan head. w/ SEMS wire clamp	**B** - Black	**M** - Marking strip

* Consult Factory

Series 15104

Edge Connectors – 1 Sided Boards / Right Angle Mount

SPECIFICATIONS
Rating: 10A, 300V
Center Spacing: 0.375” or 3/8” (9.52mm)
Wire Range: #12-22 AWG CU
Number of Poles: 6- to 28-poles
Screw Size: #6-32
Torque Rating: 12 lb-in
Terminals: Pressure plate terminals with screws set at 45° or 90° angle
PC Board: Edge contact accepts standard 1/16” (0.0625) PCB
Contacts: Tuning fork design of 0.021” thick phosphorus bronze with 0.0001” bright tin-plating
Material: Black, UL Rated 94V0 Thermoplastic
Operating Temperature: 95°C max.
Agency Information: UL File E62622, CSA File 47235

Poles	A	B	C	D	E	Board Width
06	3.00	2.62	2.00	2.16	2.36	1.99
08	3.75	3.37	2.75	2.91	3.11	2.74
10	4.50	4.12	3.50	3.66	3.86	3.49
12	5.25	4.87	4.25	4.41	4.61	4.24
14	6.00	5.62	5.00	5.16	5.36	4.99
16	6.75	6.37	5.75	5.91	6.11	5.74
18	7.50	7.12	6.50	6.66	6.86	6.49
20	8.25	7.87	7.25	7.41	7.61	7.23
22	9.00	8.62	8.00	8.16	8.36	7.98
24	9.75	9.37	8.75	8.91	9.11	8.73
26	10.50	10.12	9.50	9.66	9.86	9.48
28	11.25	10.87	10.25	10.41	10.61	10.23

* Dimensions in inches. To convert to millimeters, multiply by 25.4.
Integral standoffs for mounting marker strips - consult factory.

Dimensions - in (mm)

15104 Series

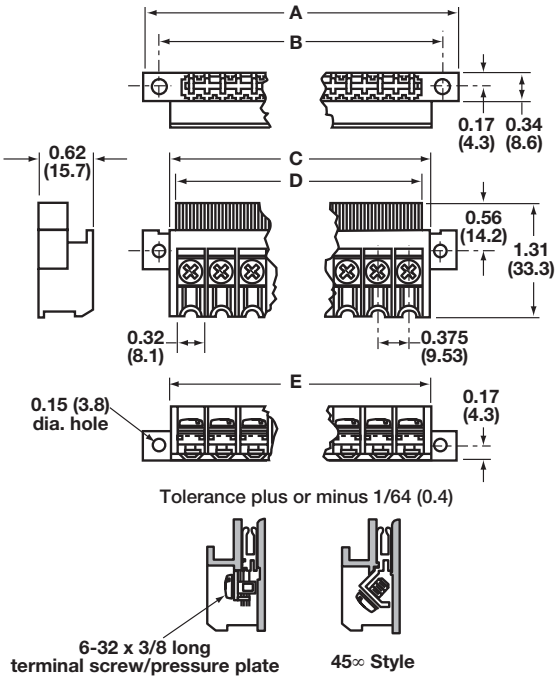

Part Numbering System

Series		Poles	Terminal	Plating	Screw
1 5 1 0 4	–	☐☐	☐	☐	☐
		06 to **28** (Increments of 2)	**1** - 90° angle **2** - 45° angle	**T** - Tin **G** - Gold*	**1** - #6-32 pan head. w/wire clamp

* Consult Factory

Cooper Bussmann Compliance References

UL1059 & CSA 22.2 No. 158 Voltage Rating
Voltage ratings of terminal blocks are based on the minimum spacing between electrically conductive parts and a minimum withstand voltage. The spacings are measured under two conditions: 1) through air, defined as the shortest distance an arc must travel through an air path from one electrically conductive part to another at opposite polarity or from an electrically conductive part to a grounded surface; and 2) over surface, defined as the shortest distance an arc must travel as it tracks along the surface of an insulating material from one electrically conductive part to another at opposite polarity or from an electrically conductive part to a grounded surface. The withstand voltage, termed dielectric withstand, is dependent on the voltage rating. The value is 1000V plus twice the rated voltage for one minute. this is tested under both conditions listed above. The following chart shows the UL 1059 and CSA 22.2 No. 158 spacing requirements, in inches.

IEC Compliance
Some Magnum Terminal Blocks comply with the requirements in IEC Publication 60947-7-1 Terminal Blocks for Copper Conductors. these blocks are concurrently recognized and certified under the UL Classification Program. Ratings, except where indicated, are concurrent with UL 1059.

CE
In 1998, Cooper Bussmann received CE certification on all Magnum products. For terminal blocks, CE is a self-certification mark applied to products that have met safety and performance requirements set forth by the European Union (EU). This mark is required for free movement of product in the European market.

Application	Voltage Rating	Spacing Through Air	Spacing Over Surface
CLASS A Service equpment, including dead-front switchboards, panelboards, service entrance devices, etc.	51 - 150 151 - 300 301 - 600	0.50 0.75 1.00	0.75 1.25 2.00
CLASS B Commercial appliances, including business equipment, electronic data processing equipment, etc.	51 - 150 151 - 300 301 - 600	0.06 0.09 0.38	0.06 0.09 0.50
CLASS C General industrial, including machine tool controls, which can further be defined as equipment governed by UL508.	51 - 150 151 - 300 301 - 600	0.13 0.25 0.38	0.25 0.38 0.50
CLASS D Industrial devices having limited ratings.	51 - 300 301 - 600	0.06 0.19	0.13 0.38

Magnum Series	CLASS A 51-150 Volts	CLASS A 151-300 Volts	CLASS A 301-600 Volts	CLASS B 51-150 Volts	CLASS B 151-300 Volts	CLASS B 301-600 Volts	CLASS C 51-150 Volts	CLASS C 151-300 Volts	CLASS C 301-600 Volts	CLASS D 51-300 Volts	CLASS D 301-600 Volts
A/CB1000					X		X			X	
A/CB2000					X			X			
LP2000					X		X				
A/CB3000						X			X		
LP3000					X		X				
A/B4000	X					X			X		
A/CB5000					X		X			X	
7000				X			X				
TB100					X		X			X	
TB200					X			X			X
TB200HB						X			X		X
TB300						X			X		X
TB400						X			X		

Customer Satisfaction Team

Available to answer questions regarding Magnum products Monday-Friday, 8:00 a.m. – 6:00 p.m. Central Time for all US time zones. Contact:

- Phone: 636-527-3877
- Toll-free fax: 800-544-2570
- E-mail: busscustsat@cooperindustries.com

C^3 – the Enhanced, Online Cooper Customer Center

Provides real time product availability, net pricing, order status & shipment tracking across six Cooper divisions: B-line, Bussmann, Crouse-hinds, Lighting, Power Systems & Wiring Devices. Call 877-995-5955 for log-in assistance. Available at:

- www.cooperc3.com

Application Engineering

Technical assistance is available to all customers. Staffed by degreed electrical engineers, this application support is available Monday-Friday, 8:00 a.m. – 5:00 p.m. Central Time. Contact:

- Phone: 636-527-1270
- Fax: 636-527-1607
- E-mail: fusetech@cooperindustries.com
- Live Chat: www.cooperbussmann.com

Online Resources

Visit www.cooperbussmann.com for the following resources:

- Product search & cross-reference
- Product & technical materials
- Solutions centers for information on topical issues including arc-flash, selective coordination & short-circuit current rating
- Technical tools, like our arc-flash calculator

© 2009 Cooper Bussmann
St. Louis, MO 63178
636-394-2877
www.cooperbussmann.com

Your Authorized Magnum Distributor is:

MAGNUM

Cooper Industries, Ltd.
600 Travis, Ste. 5800
Houston, TX 77002-1001
P: 713-209-8400
www.cooperindustries.com

Reorder # 7001 0809

PDF Only

COOPER Bussmann

OCEAN CHIPS
Океан Электроники
Поставка электронных компонентов

Компания «Океан Электроники» предлагает заключение долгосрочных отношений при поставках импортных электронных компонентов на взаимовыгодных условиях!

Наши преимущества:

- Поставка оригинальных импортных электронных компонентов напрямую с производств Америки, Европы и Азии, а так же с крупнейших складов мира;
- Широкая линейка поставок активных и пассивных импортных электронных компонентов (более 30 млн. наименований);
- Поставка сложных, дефицитных, либо снятых с производства позиций;
- Оперативные сроки поставки под заказ (от 5 рабочих дней);
- Экспресс доставка в любую точку России;
- Помощь Конструкторского Отдела и консультации квалифицированных инженеров;
- Техническая поддержка проекта, помощь в подборе аналогов, поставка прототипов;
- Поставка электронных компонентов под контролем ВП;
- Система менеджмента качества сертифицирована по Международному стандарту ISO 9001;
- При необходимости вся продукция военного и аэрокосмического назначения проходит испытания и сертификацию в лаборатории (по согласованию с заказчиком);
- Поставка специализированных компонентов военного и аэрокосмического уровня качества (Xilinx, Altera, Analog Devices, Intersil, Interpoint, Microsemi, Actel, Aeroflex, Peregrine, VPT, Syfer, Eurofarad, Texas Instruments, MS Kennedy, Miteq, Cobham, E2V, MA-COM, Hittite, Mini-Circuits, General Dynamics и др.);

Компания «Океан Электроники» является официальным дистрибьютором и эксклюзивным представителем в России одного из крупнейших производителей разъемов военного и аэрокосмического назначения **«JONHON»**, а так же официальным дистрибьютором и эксклюзивным представителем в России производителя высокотехнологичных и надежных решений для передачи СВЧ сигналов **«FORSTAR»**.

AVIC JONHON

«JONHON» (основан в 1970 г.)

Разъемы специального, военного и аэрокосмического назначения:

(Применяются в военной, авиационной, аэрокосмической, морской, железнодорожной, горно- и нефтедобывающей отраслях промышленности)

«FORSTAR» (основан в 1998 г.)

ВЧ соединители, коаксиальные кабели, кабельные сборки и микроволновые компоненты:

(Применяются в телекоммуникациях гражданского и специального назначения, в средствах связи, РЛС, а так же военной, авиационной и аэрокосмической отраслях промышленности).

FORSTAR®

Телефон: 8 (812) 309-75-97 (многоканальный)
Факс: 8 (812) 320-03-32
Электронная почта: ocean@oceanchips.ru
Web: http://oceanchips.ru/
Адрес: 198099, г. Санкт-Петербург, ул. Калинина, д. 2, корп. 4, лит. А