MULTI-STANDARD FULLY INTEGRATED 13.56-MHZ RFID ANALOG FRONT END AND DATA-FRAMING READER SYSTEM

Check for Samples: TRF7960, TRF7961

1 Introduction

1.1 Features

- **Completely Integrated Protocol Handling**
- **Separate Internal High-PSRR Power Supplies for Analog, Digital, and PA Sections Provide Noise Isolation for Superior Read Range and Reliability**
- **Dual Receiver Inputs With AM and PM Demodulation to Minimize Communication Holes**
- **Receiver AM and PM RSSI**
- **Reader-to-Reader Anti-Collision**
- **High Integration Reduces Total BOM and Board Area**
  - **Single External 13.56-MHz Crystal Oscillator**
  - **MCU-Selectable Clock-Frequency Output of RF, RF/2, or RF/4**
  - **Adjustable 20-mA, High-PSRR LDO for Powering External MCU**
- **Easy to Use With High Flexibility**
  - **Auto-Configured Default Modes for Each Supported ISO Protocol**
  - **12 User-Programmable Registers**
  - **Selectable Receiver Gain and AGC**
  - **Programmable Output Power (100 mW or 200 mW)**
  - **Adjustable ASK Modulation Range (8% to 30%)**
  - **Built-In Receiver Band-Pass Filter With User-Selectable Corner Frequencies**
- **Wide Operating Voltage Range of 2.7 V to 5.5 V**
- **Ultra-Low-Power Modes**
  - **Power Down < 1 µA**
  - **Standby 120 µA**
  - **Active (Rx only) 10 mA**
- **Parallel 8-Bit or Serial 4-Pin SPI Interface With MCU Using 12-Byte FIFO**
- **Ultra-Small 32-Pin QFN Package (5 mm × 5 mm)**
- **Available Tools**
  - **Reference Design/EVM With Development Software**
  - **Source Code Available for MSP430**

1.2 APPLICATIONS

- **Secure Access Control**
- **Product Authentication**
  - **Printer Ink Cartridges**
  - **Blood Glucose Monitors**
- **Contactless Payment Systems**
- **Medical Systems**

1.3 Description

The TRF7960/61 is an integrated analog front end and data-framing system for a 13.56-MHz RFID reader system. Built-in programming options make it suitable for a wide range of applications for proximity and vicinity RFID systems.

The reader is configured by selecting the desired protocol in the control registers. Direct access to all control registers allows fine tuning of various reader parameters as needed.

Please be aware that an important notice concerning availability, standard warranty, and use in critical applications of Texas Instruments semiconductor products and disclaimers thereto appears at the end of this data sheet.

Tag-it is a trademark of Texas Instruments Incorporated.

PRODUCTION DATA information is current as of publication date. Products conform to specifications per the terms of the Texas Instruments standard warranty. Production processing does not necessarily include testing of all parameters.

Copyright © 2006–2010, Texas Instruments Incorporated

Table 1-1. PRODUCT SELECTION TABLE

DEVICE	PROTOCOLS					
	ISO14443A/B				ISO15693 ISO18000-3	Tag-it™
	106 kbps	212 kbps	424 kbps	848 kbps		
TRF7960	√	√	√	√	√	√
TRF7961					√	√

Copyright © 2006–2010, Texas Instruments Incorporated

1 Introduction **1**
1.1 Features 1
1.2 APPLICATIONS 1
1.3 Description 1
2 Description (continued) **4**
3 Physical Characteristics **5**
3.1 Terminal Functions 5
3.2 PACKAGING/ORDERING INFORMATION 6
4 ELECTRICAL SPECIFICATIONS **7**
4.1 ABSOLUTE MAXIMUM RATINGS 7
4.2 DISSIPATION RATINGS TABLE 7
4.3 RECOMMENDED OPERATING CONDITIONS 7
4.4 ELECTRICAL CHARACTERISTICS 8
4.5 Application Schematic for the TRF796x EVM (Parallel Mode) 9
4.6 Application Schematic for the TRF796x EVM (SPI Mode) 10
5 System Description **11**
5.1 Power Supplies 11
5.2 Receiver – Analog Section 17
5.3 Register Descriptions 24
5.4 Direct Commands From MCU to Reader 34
5.5 Reader Communication Interface 36
5.6 Parallel Interface Communication 38
5.7 Serial Interface Communication 40
5.8 External Power Amplifier Application 44

Copyright © 2006–2010, Texas Instruments Incorporated

2 Description (continued)

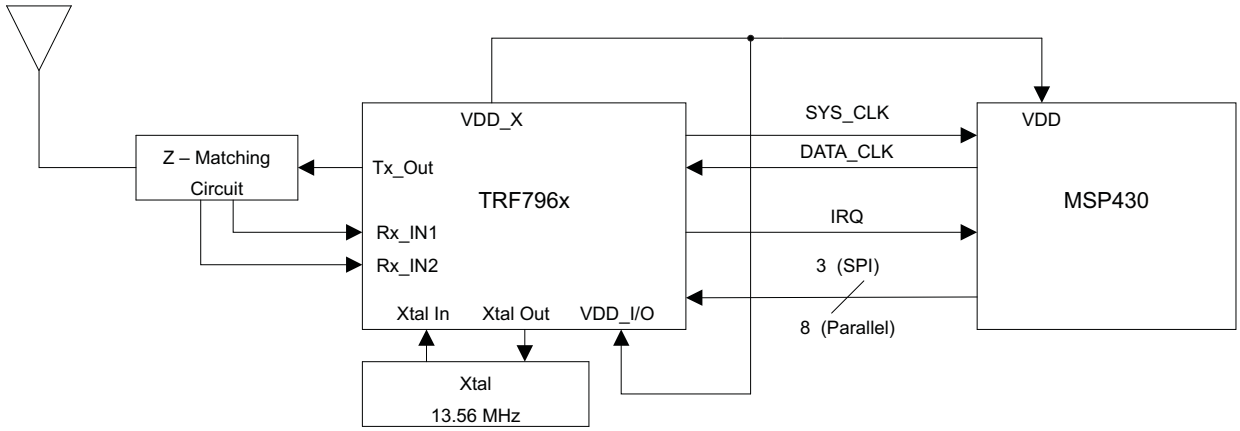

Figure 2-1. Typical Application

A parallel or serial interface can be implemented for communication between the MCU and reader. Transmit and receive functions use internal encoders and decoders with a 12-byte FIFO register. For direct transmit or receive functions, the encoders / decoders can be bypassed so the MCU can process the data in real time. The transmitter has selectable output power levels of 100 mW (20 dBm) or 200 mW (23 dBm) into a 50-Ω load (5 -V supply) and is capable of ASK or OOK modulation. Integrated voltage regulators ensure power-supply noise rejection for the complete reader system.

Data transmission comprises low-level encoding for ISO15693, modified Miller for ISO14443-A, high-bit-rate systems for ISO14443 and Tag-it coding systems. Included with the data encoding is automatic generation of SOF, EOF, CRC, and / or parity bits.

The receiver system enables AM and PM demodulation using a dual-input architecture. The receiver also includes an automatic gain control option and selectable gain. Also included is a selectable bandwidth to cover a broad range of input sub-carrier signal options. The received signal strength for AM and PM modulation is accessible via the RSSI register. The receiver output is a digitized sub-carrier signal among a selectable protocol and bit rate as outlined in Table 5-11. A selected decoder delivers bit stream and a data clock as outputs.

The receiver system also includes a framing system. This system performs CRC and / or parity check, removes the EOF and SOF settings, and organizes the data in bytes. Framed data is then accessible to the MCU via a 12-byte FIFO register and MCU interface. The framing supports ISO14443 and ISO15693 protocols.

The TRF7960/61 supports data communication levels from 1.8 V to 5.5 V for the MCU I/O interface, while also providing a data synchronization clock. An auxiliary 20-mA regulator (pin 32) is available for additional system circuits.

 Copyright © 2006–2010, Texas Instruments Incorporated

3 Physical Characteristics

3.1 Terminal Functions

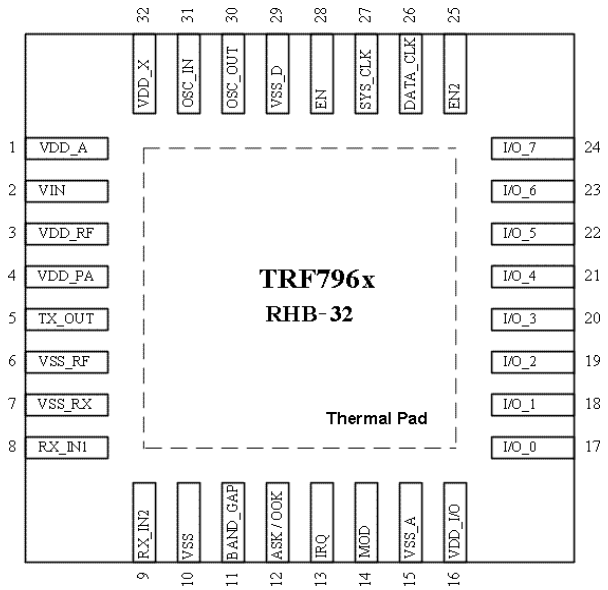

Figure 3-1. TRF796x Pin Assignments (Top View)

Table 3-1. Terminal Functions

TERMINAL		TYPE[(1)]	DESCRIPTION
NAME	NO.		
VDD_A	1	OUT	Internal regulated supply (2.7 V – 3.4 V) for analog circuitry
VIN	2	SUP	External supply input to chip (2.7 V – 5.5 V)
VDD_RF	3	OUT	Internal regulated supply (2.7 V – 5 V), normally connected to VDD_PA (pin 4)
VDD_PA	4	INP	Supply for PA; normally connected externally to VDD_RF (pin 3)
TX_OUT	5	OUT	RF output (selectable output power, 100 mW at 8 Ω or 200 mW at 4 Ω, with VDD = 5 V)
VSS_RF	6	SUP	Negative supply for PA; normally connected to circuit ground
VSS_RX	7	SUP	Negative supply for RX inputs; normally connected to circuit ground
RX_IN1	8	INP	RX input, used for AM reception
RX_IN2	9	INP	RX input, used for PM reception
VSS	10	SUP	Chip substrate ground
BAND_GAP	11	OUT	Band-gap voltage (1.6 V); internal analog voltage reference; must be ac-bypassed to ground.
ASK/OOK	12	BID	Also can be configured to provide the received analog signal output (ANA_OUT)
			Direct mode, selection between ASK and OOK modulation (0 = ASK, 1 = OOK)
IRQ	13	OUT	Interrupt request
MOD	14	INP	Direct mode, external modulation input
VSS_A	15	SUP	Negative supply for internal analog circuits; normally connected to circuit ground
VDD_I/O	16	SUP	Supply for I/O communications (1.8 V – 5.5 V). Should be connected to VIN for 5-V communication, VDD_X for 3.3-V communication, or any other voltage from 1.8 V to 5.5 V.
I/O_0	17	BID	I/O pin for parallel communication
I/O_1	18	BID	I/O pin for parallel communication
I/O_2	19	BID	I/O pin for parallel communication
I/O_3	20	BID	I/O pin for parallel communication
I/O_4	21	BID	I/O pin for parallel communication

(1) SUP = Supply, INP = Input, BID = Bi-directional, OUT = Output

Copyright © 2006–2010, Texas Instruments Incorporated

Table 3-1. Terminal Functions (continued)

TERMINAL		TYPE[1]	DESCRIPTION
NAME	NO.		
I/O_5	22	BID	I/O pin for parallel communication
			Strobe out clock for serial communication
			Data clock output in direct mode
I/O_6	23	BID	I/O pin for parallel communication
			MISO for serial communication (SPI)
			Serial bit data output in direct mode 1 or sub-carrier signal in direct mode 0
I/O_7	24	BID	I/O pin for parallel communication.
			MOSI for serial communication (SPI)
EN2	25	INP	Pulse enable and selection of power down mode. If EN2 is connected to VIN, then VDD_X is active during power down to support the MCU. Pin can also be used for pulse wake-up from power-down mode.
DATA_CLK	26	INP	Clock input for MCU communication (parallel and serial)
SYS_CLK	27	OUT	Clock for MCU (3.39 / 6.78 / 13.56 MHz) at EN = 1 and EN2 = don't care
			If EN = 0 and EN2 = 1, then system clock is set to 60 kHz
EN	28	INP	Chip enable input (If EN = 0, then chip is in power-down mode).
VSS_D	29	SUP	Negative supply for internal digital circuits; normally connected to circuit ground
OSC_OUT	30	OUT	Crystal oscillator output
OSC_IN	31	INP	Crystal oscillator input
VDD_X	32	OUT	Internally regulated supply (2.7 V – 3.4 V) for external circuitry (MCU)
Thermal Pad			Connected to circuit ground

3.2 PACKAGING/ORDERING INFORMATION[1]

PACKAGED DEVICES	PACKAGE TYPE [2]	TRANSPORT MEDIA	QUANTITY
TRF7960RHBT	RHB-32	Tape and reel	250
TRF7960RHBR		Tape and reel	3000
TRF7961RHBT	RHB-32	Tape and reel	250
TRF7961RHBR		Tape and reel	3000

(1) For the most current package and ordering information, see the Package Option Addendum at the end of this document, or see the TI Web site at www.ti.com.
(2) Package drawings, standard packing quantities, thermal data, symbolization, and PCB design guidelines are available at www.ti.com/sc/package .

Copyright © 2006–2010, Texas Instruments Incorporated

4 ELECTRICAL SPECIFICATIONS

4.1 ABSOLUTE MAXIMUM RATINGS

over operating free-air temperature range (unless otherwise noted)[1]

			VALUE	UNIT
VIN	Supply voltage		6	V
I_O	Output current		150	mA
	Continuous power dissipation		See Dissipation Ratings Table	
T_J	Maximum junction temperature, any condition[2]		140	°C
	Maximum junction temperature, continuous operation, long-term reliability[2]		125	°C
T_{stg}	Storage temperature range		–55 to 150	°C
	Lead temperature 1,6 mm (1/16 inch) from case for 10 seconds		300	°C
	ESDS rating	HBM (human body model)	2	kV
		CDM (charged device model)	500	V
		MM (machine model)	200	

(1) The absolute maximum ratings under any condition is limited by the constraints of the silicon process. Stresses above these ratings may cause permanent damage. Exposure to absolute maximum conditions for extended periods may degrade device reliability. These are stress ratings only and functional operation of the device at these or any other conditions beyond those specified are not implied.
(2) The maximum junction temperature for continuous operation is limited by package constraints. Operation above this temperature may result in reduced reliability and/or lifetime of the device.

4.2 DISSIPATION RATINGS TABLE

PACKAGE	θ_{JC} (°C/W)	θ_{JA} [1] (°C/W)	POWER RATING[2]	
			$T_A \le 25°C$	$T_A = 85°C$
RHB (32)	31	36.4	2.7 W	1.1 W

(1) This data was taken using the JEDEC standard high-K test PCB.
(2) Power rating is determined with a junction temperature of 125°C. This is the point where distortion starts to increase substantially. Thermal management of the final PCB should strive to keep the junction temperature at or below 125°C for best performance and long-term reliability.

4.3 RECOMMENDED OPERATING CONDITIONS

over operating free-air temperature range (unless otherwise noted)

		MIN	TYP	MAX	UNIT
VIN	Supply voltage	2.7	5	5.5	V
T_J	Operating virtual junction temperature range	–40		125	°C
T_A	Operating ambient temperature range	–40	25	110	°C

Copyright © 2006–2010, Texas Instruments Incorporated

4.4 ELECTRICAL CHARACTERISTICS

over temperature range V_S = 5 V (unless otherwise noted)

PARAMETER		CONDITIONS	TYP			
			25°C	–40°C TO 110°C	UNIT	MIN/ MAX
I_{PD}	Supply current in power-down mode	All systems disabled, including supply-voltage regulators	1	10	µA	MAX
I_{PD2}	Supply current in power-down mode 2	The reference voltage generator and the VDD_X remain active to support external circuitry.	120	300	µA	MAX
I_{STBY}	Supply current in standby mode	Oscillator running, supply-voltage regulators in low-consumption mode	1.5	4	mA	MAX
I_{ON1}	Supply current without antenna driver current	Oscillator, regulators, Rx and AGC, are all active. Tx is off.	10	16	mA	MAX
I_{ON2}	Supply current with antenna driver current	Oscillator, regulators, Rx, AGC, and Tx are all active. Pout = 100 mW.	70		mA	MAX
I_{ON3}	Supply current with antenna driver current	Oscillator, regulators, Rx, AGC, and Tx are all active. Pout = 200 mW.	120		mA	MAX
BG	Band Gap voltage	Internal analog reference voltage	1.6	1.4 1.7	V	MIN MAX
V_{POR}	Power on reset voltage (POR)		2	1.4 2.5	V	MIN MAX
V_{DD_A}	Regulated supply for analog circuitry		3.5	3.1 3.8	V	MIN MAX
V_{DD_RF}	Regulated supply for RF circuitry	Regulator set for 5-V system with 250-mV difference.	4.6	4 5.2	V	MIN MAX
V_{DD_X}	Regulated supply for external circuitry		3.4	3.1 3.8	V	MIN MAX
P_{PSRR}	Rejection of external supply noise on the supply VDD_RF regulator	The difference between the external supply and the regulated voltage is higher than 250 mV. Measured at 212 kHz.	26	20	dB	MIN
R_{RFOUT}	PA driver output resistance	Half-power mode	8	12	Ω	MAX
		Full- power mode	4	6	Ω	MAX
R_{RFIN}	RX_IN1 and RX_IN2 input resistance		10	5 20	kΩ	MIN MAX
V_{RFIN}	Maximum input voltage	At RX_IN1 and RX_IN2 inputs	3.5		V_{PP}	MAX
V_{SENS}	Input sensitivity	$f_{SUB\text{-}CARRIER}$ = 424 kHz	1.2	2.5	mV_{PP}	MAX
		$f_{SUB\text{-}CARRIER}$ = 848 kHz	1.2	3	mV_{PP}	MAX
t_{SET_PD}	Set up time after power down		10	20	ms	MAX
t_{SET_STBY}	Set up time after standby mode		30	100	µs	MAX
t_{REC}	Recovery time after modulation (ISO14443)	Modulation signal: sine, 424-kHz, 10-mVpp		60	µs	MAX
f_{SYS_CLK}	SYS_CLK frequency	In PD2 mode EN = 0 and EN2 = 1	60	30 120	kHz	MIN MAX
CLK_{MAX}	Maximum CLK frequency		2		MHz	TYP
V_{IL}	Input logic low		0.2	0.2	VDD_I/O	MAX
V_{IH}	Input logic high			0.8	VDD_I/O	MIN
R_{OUT}	Output resistance I/O_0 to I/O_7	low_io = H for VDD_I/O < 2.7 V	400	800	Ω	MAX
R_{SYS_CLK}	Output resistance SYS_CLK	low_io = H for VDD_I/O < 2.7 V	200	400	Ω	MAX

Copyright © 2006–2010, Texas Instruments Incorporated

4.5 Application Schematic for the TRF796x EVM (Parallel Mode)

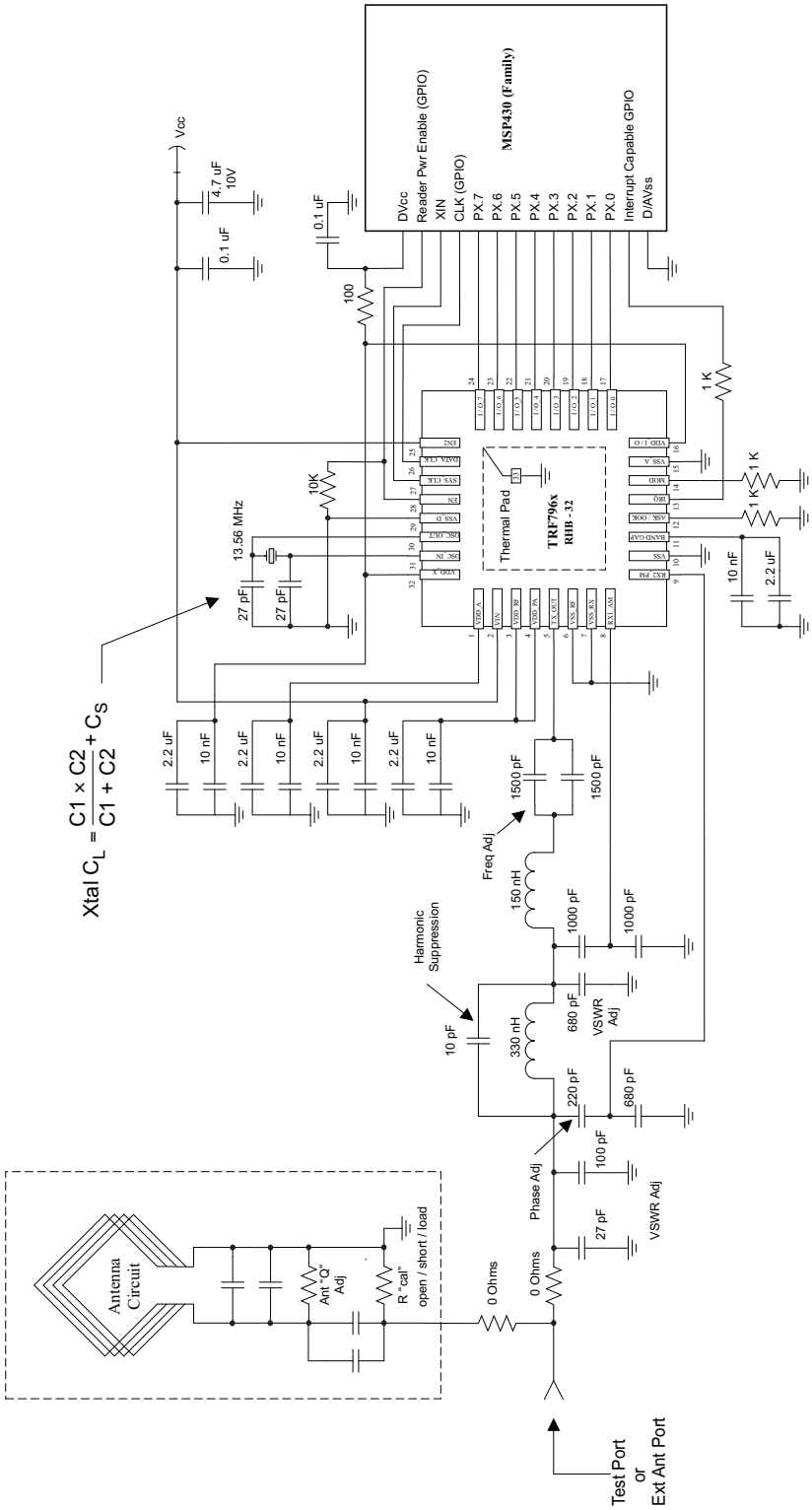

4.6 Application Schematic for the TRF796x EVM (SPI Mode)

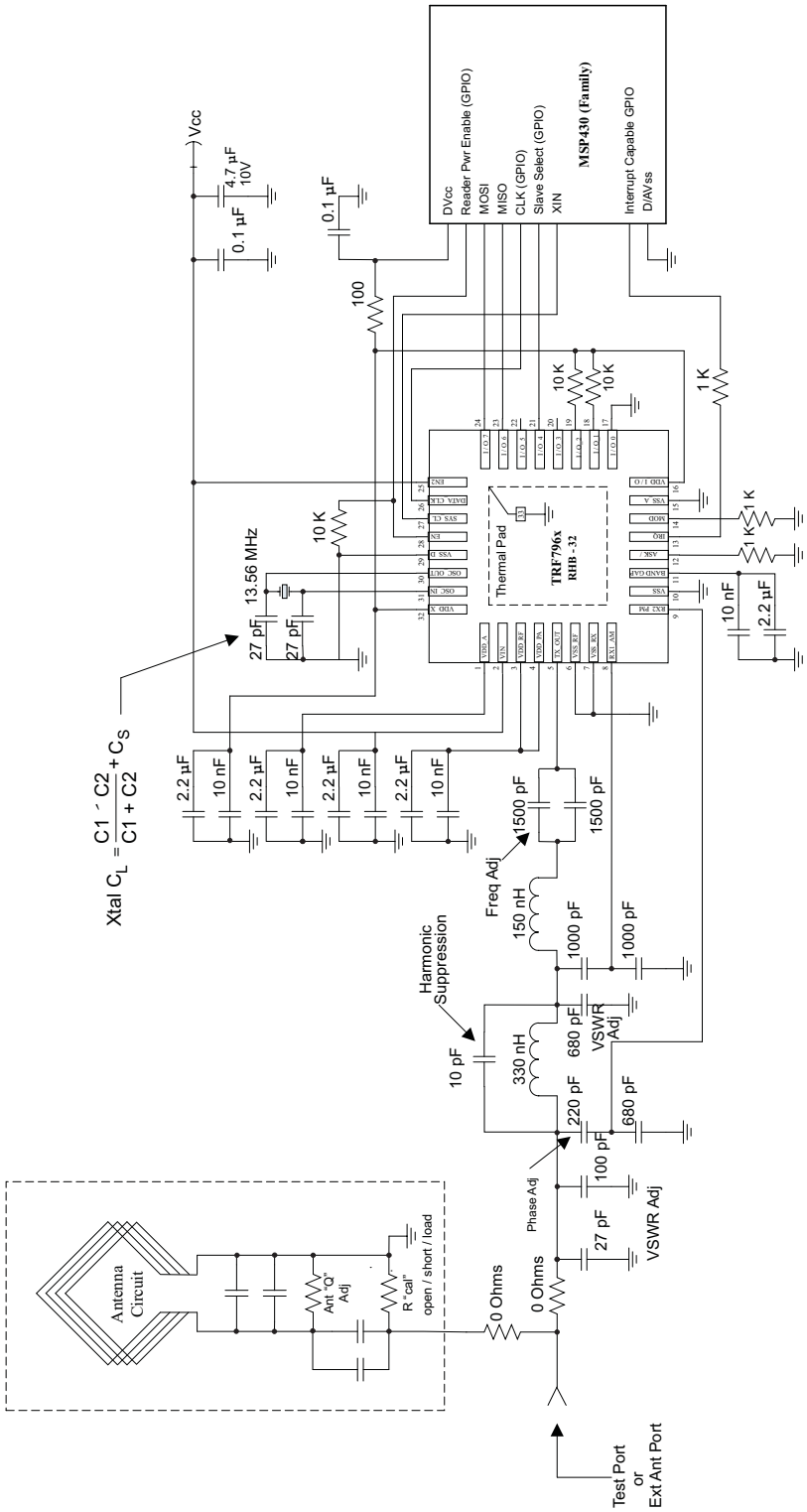

Copyright © 2006–2010, Texas Instruments Incorporated

5 System Description

5.1 Power Supplies

The positive supply pin, VIN (pin 2) has an input voltage range of 2.7 V to 5.5 V. The positive supply input sources three internal regulators with output voltages V_{DD_RF}, V_{DD_A} and V_{DD_X} that use external bypass capacitors for supply noise filtering. These regulators provide enhanced PSRR for the RFID reader system.

The regulators are not independent and have common control bits for output voltage setting. The regulators can be configured to operate in either automatic or manual mode. The automatic regulator mode setting ensures an optimal compromise between regulator PSRR and highest possible supply voltage for RF output power. Whereas, the manual mode allows the user to manually configure the regulator settings.

V_{DD_RF} The regulator V_{DD_RF} (pin 3) is used to source the RF output stage. The voltage regulator can be set for either 5-V or 3-V operation. When configured for the 5-V operation, the output voltage can be set from 4.3 V to 5 V in 100-mV steps. The current sourcing capability for 5-V operation is 150 mA maximum over the adjusted output voltage range.

When configured for 3-V operation, the output can be set from 2.7 V to 3.4 V, also in 100-mV steps. The current sourcing capability for 3-V operation is 100 mA maximum over the adjusted output voltage range.

V_{DD_A} Regulator V_{DD_A} (pin 1) supplies voltage to analog circuits within the reader chip. The voltage setting is divided in two ranges. When configured for 5-V operation, the output voltage is fixed at 3.5 V.

When configured for 3-V operation, the output can be set from 2.7 V to 3.4 V in 100-mV steps. Note that when configured, both V_{DD_A} and V_{DD_X} regulators are configured together (their settings are not independent).

V_{DD_X} Regulator V_{DD_X} (pin 32) can be used to source the digital I/O of the reader chip together with other external system components. When configured for 5-V operation, the output voltage is fixed at 3.4 V.

When configured for 3-V operation, the output voltage can be set from 2.7 to 3.4 V in 100-mV steps. The total current sourcing capability of the V_{DD_X} regulator is 20 mA maximum over the adjusted output range. Note that when configured, both V_{DD_A} and V_{DD_X} regulators are configured together (their settings are not independent).

V_{DD_PA} The V_{DD_PA} pin (pin 4) is the positive supply pin for the RF output stage and is externally connected to the regulator output V_{DD_RF} (pin 3).

5.1.1 Negative Supply Connections

The negative supply connections are all externally connected together (to GND). The substrate connection is V_{SS} (pin 10), the analog negative supply is V_{SS_A} (pin 15), the logic negative supply is V_{SS_D} (pin 29), the RF output stage negative supply is V_{SS_TX} (pin 6), and the negative supply for the RF receiver input is V_{SS_RX} (pin 7).

5.1.2 Digital I/O Interface

To allow compatible I/O signal levels, the TRF7960/61 has a separate supply input $V_{DD_I/O}$ (pin 16), with an input voltage range of 1.8 V to 5.5 V. This pin is used to supply the I/O interface pins (I/O_0 to I/O_7), IRQ, SYS_CLK, and DATA_CLK pins of the reader. In typical applications, $V_{DD_I/O}$ is connected directly to V_{DD_X} to ensure that the I/O signal levels of the MCU are the same as the internal logic levels of the reader.

Copyright © 2006–2010, Texas Instruments Incorporated

5.1.3 Supply Regulator Configuration

The supply regulators can be automatically or manually configured by the control bits. The available options are shown in Table 5-1 through Table 5-4. Table 5-1 shows a 5-V system and the manual-mode regulator settings. Table 5-2 shows manual mode for selection of a 3-V system. Table 5-3 and Table 5-4 show the automatic-mode gain settings for 5-V and 3-V systems.

The automatic mode is the default configuration. In automatic mode, the regulators are automatically set every time the system is activated by asserting the EN input HIGH. The internal regulators are also automatically reconfigured every time the automatic regulator selection bit is set HIGH (on the rising edge).

The user can re-run the automatic mode setting from a state in which the automatic setting bit is already high by changing the automatic setting bit from high to low to high. The regulator-configuration algorithm adjusts the regulator outputs 250 mV below the V_{IN} level, but not higher than 5 V for V_{DD_RF}, 3.5 V for V_{DD_A}, and 3.4 V for V_{DD_X}. This ensures the highest possible supply voltage for the RF output stage while maintaining an adequate PSRR (power supply rejection ratio). As an example, the user can improve the PSRR if there is a noisy supply voltage from V_{DD_X} by increasing the target voltage difference across the V_{DD_X} regulator as shown for automatic regulator settings in Table 5-3 and Table 5-4.

Table 5-1. Supply-Regulator Setting – Manual – 5-V System

Byte Address	Option Bits Setting in Control Register								Action
	B7	B6	B5	B4	B3	B2	B1	B0	
00								1	5-V system
0B	0								Manual regulator setting
0B	0					1	1	1	V_{DD_RF} = 5 V, V_{DD_A} = 3.5 V, and V_{DD_X} = 3.4 V
0B	0					1	1	0	V_{DD_RF} = 4.9 V, V_{DD_A} = 3.5 V, and V_{DD_X} = 3.4 V
0B	0					1	0	1	V_{DD_RF} = 4.8 V, V_{DD_A} = 3.5 V, and V_{DD_X} = 3.4 V
0B	0					1	0	0	V_{DD_RF} = 4.7 V, V_{DD_A} = 3.5 V, and V_{DD_X} = 3.4 V
0B	0					0	1	1	V_{DD_RF} = 4.6 V, V_{DD_A} = 3.5 V, and V_{DD_X} = 3.4 V
0B	0					0	1	0	V_{DD_RF} = 4.5 V, V_{DD_A} = 3.5 V, and V_{DD_X} = 3.4 V
0B	0					0	0	1	V_{DD_RF} = 4.4 V, V_{DD_A} = 3.5 V, and V_{DD_X} = 3.4 V
0B	0					0	0	0	V_{DD_RF} = 4.3 V, V_{DD_A} = 3.5 V, and V_{DD_X} = 3.4 V

Table 5-2. Supply-Regulator Setting – Manual – 3-V System

Byte Address	Option Bits Setting in Control Register								Action
	B7	B6	B5	B4	B3	B2	B1	B0	
00								0	3V system
0B	0								Manual regulator setting
0B	0					1	1	1	V_{DD_RF} = 3.4 V, V_{DD_A}, and V_{DD_X} = 3.4 V
0B	0					1	1	0	V_{DD_RF} = 3.3 V, V_{DD_A}, and V_{DD_X} = 3.3 V
0B	0					1	0	1	V_{DD_RF} = 3.2 V, V_{DD_A}, and V_{DD_X} = 3.2 V
0B	0					1	0	0	V_{DD_R}F = 3.1 V, V_{DD_A}, and V_{DD_X} = 3.1 V
0B	0					0	1	1	V_{DD_RF} = 3.0 V, V_{DD_A}, and V_{DD_X} = 3.0 V
0B	0					0	1	0	V_{DD_RF} = 2.9 V, V_{DD_A}, and V_{DD_X} = 2.9 V
0B	0					0	0	1	V_{DD_RF} = 2.8 V, V_{DD_A}, and V_{DD_X} = 2.8 V
0B	0					0	0	0	V_{DD_RF} = 2.7 V, V_{DD_A}, and V_{DD_X} = 2.7 V

Copyright © 2006–2010, Texas Instruments Incorporated

Table 5-3. Supply-Regulator Setting – Automatic – 5-V System

Byte Address	Option Bits Setting in Control Register								Action
	B7	B6	B5	B4	B3	B2 (1)	B1	B0	
00								1	5-V system
0B	1					x	1	1	Automatic regulator setting ≠ 250-mV difference
0B	1					x	1	0	Automatic regulator setting ≠ 350-mV difference
0B	1					x	0	0	Automatic regulator setting ≠ 400-mV difference

(1) X are don't cares

Table 5-4. Supply-Regulator Setting – Automatic – 3-V System

Byte Address	Option Bits Setting in Control Register								Action
	B7	B6	B5	B4	B3	B2 (1)	B1	B0	
00								0	3-V system
0B	1					x	1	1	Automatic regulator setting ≠ 250-mV difference
0B	1					x	1	0	Automatic regulator setting ≠ 350-mV difference
0B	1					x	0	0	Automatic regulator setting ≠ 400-mV difference

(1) X are don't cares

5.1.4 Power Modes

The chip has seven power states, which are controlled by two input pins (EN and EN2) and three bits in the chip status control register (00h).

The main reader enable input is EN (which has a threshold level of 1 V minimum). Any input signal level from 1.8 V to V_{IN} can be used. When EN is set high, all of the reader regulators are enabled, together with the 13.56-MHz oscillator, while the SYS_CLK (output clock for external micro controller) is made available.

The auxiliary-enable input EN2 has two functions. A direct connection from EN2 to V_{IN} ensures availability of the regulated supply (V_{DD_X}) and an auxiliary clock signal (60 kHz) on the SYS_CLK output (same for the case EN = 0). This mode is intended for systems in which the MCU controlling the reader is also being supplied by the reader supply regulator (V_{DD_X}) and the MCU clock is supplied by the SYS_CLK output of the reader. This allows the MCU supply and clock to be available during power-down.

A second function of the EN2 input is to enable start-up of the reader system from complete power down (EN = 0, EN2 = 0). In this case the EN input is being controlled by the MCU or other system device that is without supply voltage during complete power down (thus unable to control the EN input). A rising edge applied to the EN2 input (which has a 1-V threshold level) starts the reader supply system and 13.56-MHz oscillator (identical to condition EN = 1). This start-up mode lasts until all of the regulators have settled and the 13.56-MHz oscillator has stabilized. If the EN input is set high by the MCU (or other system device), the reader stays active. If the EN input is not set high within 100 µs after the SYS_CLK output is switched from auxiliary clock (60 kHz) to high-frequency clock (derived from the crystal oscillator), the reader system returns to complete power-down mode. This option can be used to wake the reader system from complete power down by using a push-button switch or by sending a single pulse.

Copyright © 2006–2010, Texas Instruments Incorporated

After the reader EN line is high, the other power modes are selected by control bits. The power mode options and functions are listed in Table 5-5.

Table 5-5. Power Modes

Byte Address	Option Bits Setting in Chip Status Control Register								EN	EN2	Functionality	Current
	B7 STBY	B6	B5 RFON	B4	B3 RF PWR	B2	B1 REC ON	B0				
00									0	0	Complete power down	<1 µA
00									0	1	VDD_X available SYS_CLK auxiliary frequency 60 kHz is ON	120 µA
00	1		x	x			x		1	x	All supply regulators active and in low power mode 13.56-MHz oscillator ON SYS_CLK clock available	1.5 mA
00	0		0	x			0		1	x	All supply regulators active 13.56-MHz oscillator ON SYS_CLK clock available	3.5 mA
00	0		0	x			1		1	x	All supply regulators active 13.56-MHz oscillator ON SYS_CLK clock available Receiver active	10 mA
00	0		1	1			x		1	x	All supply regulators active 13.56-MHz oscillator ON SYS_CLK clock available Receiver active Transmitter active – half-power mode	70 mA (at 5 V)
00	0		1	0			x		1	x	All supply regulators active 13.56-MHz oscillator running SYS_CLK clock available Receiver active Transmitter active – full-power mode	120 mA (at 5 V)

During reader inactivity, the TRF7960/61 can be placed in power down-mode (EN = 0). The power down can be complete (EN = 0, EN2 = 0) with no function running, or partial (EN = 0, EN2 = 1) where the regulated supply (V_{DD_X}) and auxiliary clock 60 kHz (SYS_CLK) are available to the MCU or other system device.

When EN is set high (or on rising edge of EN2 and then confirmed by EN = 1), the supply regulators are activated and the 13.56-MHz oscillator started. When the supplies are settled and the oscillator frequency is stable, the SYS_CLK output is switched from the auxiliary frequency of 60 kHz to the selected frequency derived from the crystal oscillator. At this point, the reader is ready to communicate and perform the required tasks. The control system (MCU) can then write appropriate bits to the *chip status control* register (address 00) and select the operation mode.

The STANDBY mode (bit 7 = 1 of register 00) is the active mode with the lowest current consumption. The reader is capable of recovering from this mode to full operation in 100 µs.

The active mode with RF section disabled (bit 5 = 0 and bit 1 = 0 of register 00) is the next active mode with low power consumption. The reader is capable of recovering from this mode to full operation in 25 µs.

The active mode with only the RF receiver section active (bit 1 = 1 of register 00) can be used to measure the external RF field (as described in RSSI measurements paragraph) if reader-to-reader anticollision is implemented.

The active mode with the entire RF section active (bit 5 = 1 of register 00) is the normal mode used for transmit and receive operations.

 Copyright © 2006–2010, Texas Instruments Incorporated

5.1.5 Timing Diagrams

CHIP POWER UP TO CLOCK START

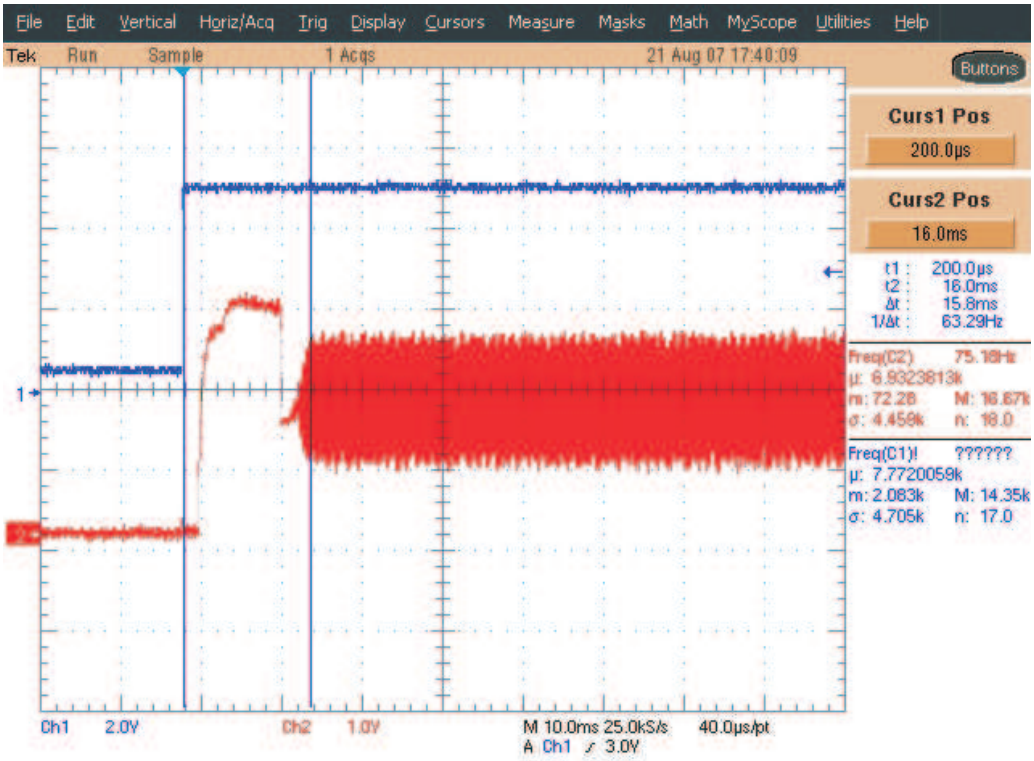

Figure 5-1. Power Up [V_{IN} (Blue) to Crystal Start (Red)]

CHIP ENABLE TO CLOCK START

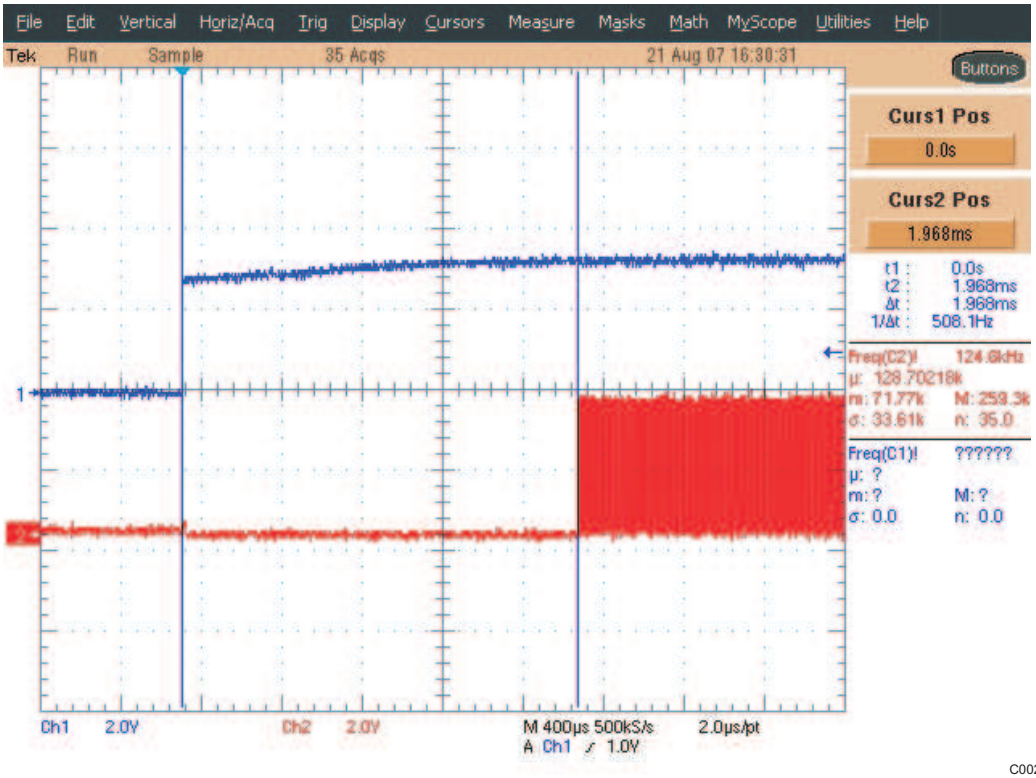

Figure 5-2. EN2 Low and EN High (Blue) to Start of System Clock (Red)

CHIP ENABLE TO CLOCK START

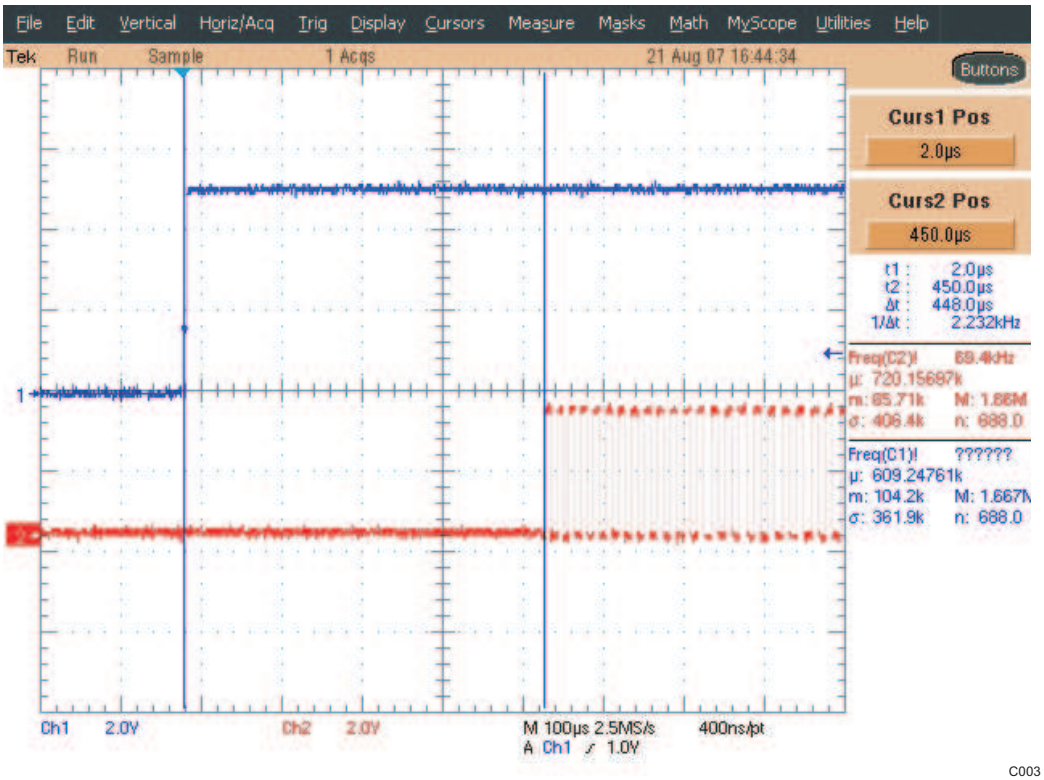

Figure 5-3. EN2 High and EN Low (Blue) to Start of System Clock (Red)

Copyright © 2006–2010, Texas Instruments Incorporated

5.2 Receiver – Analog Section

The TRF7960/61 has two receiver inputs, RX_IN1 (pin 8) and RX_IN2 (pin 9). The two inputs are connected to an external filter to ensure that AM modulation from the tag is available on at least one of the two inputs. The external filter provides a 45° phase shift for the RX_IN2 input to allow further processing of a received PM-modulated signal (if it appears) from the tag. This architecture eliminates any possible communication holes that may occur from the tag to the reader.

The two RX inputs are multiplexed to two receiver channels: the main receiver and the auxiliary receiver. Receiver input multiplexing is controlled by control bit B3 (pm-on) in the chip status control register (address 00). The main receiver is composed of an RF-detection stage, gain, filtering with AGC, and a digitizing stage whose output is connected to the digital processing block. The main receiver also has an RSSI measuring stage, which measures the strength of the demodulated signal.

The primary function of the auxiliary receiver is to measure the RSSI of the modulation signal. It also has similar RF-detection, gain, filtering with AGC, and RSSI blocks.

The default setting is RX_IN1 connected to the main receiver and RX_IN2 connected to the auxiliary receiver (bit *pm_on* = 0). When a response from the tag is detected by the RSSI, values on both inputs are measured and stored in the *RSSI level* register (address 0F). The control system reads the RSSI values and switches to the stronger receiver input (RX_IN1 or RX_IN2 by setting *pm_on* = 1).

The receiver input stage is an RF level detector. The RF amplitude level on RX_IN1 and RX_IN2 inputs should be approximately 3 V_{PP} for a V_{IN} supply level greater than 3.3 V. If the V_{IN} level is lower, the RF input peak-to-peak voltage level should not exceed the V_{IN} level. Note: V_{IN} is the main supply voltage to the device at pin 2.

The first gain and filtering stage following the RF-envelope detector has a nominal gain of 15 dB with an adjustable bandpass filter. The bandpass filter has adjustable 3-dB frequency steps (100 kHz to 400 kHz for high pass and 600 kHz to 1500 kHz for low pass). Following the bandpass filter is another gain-and-filtering stage with a nominal gain of 8 dB and with frequency characteristics identical to the first stage.

The internal filters are configured automatically, with internal presets for each new selection of a communication standard in the *ISO control* register (address 01). If required, additional fine tuning can be accomplished by writing directly to the *RX special setting* registers (address 0A).

The second receiver gain stage and digitizer stage are included in the AGC loop. The AGC loop is activated by setting the bit B2 = 1 (agc-on) in the *chip status control* register (address 00). When activated, the AGC continuously monitors the input signal level. If the signal level is significantly higher than an internal threshold level, gain reduction is activated. AGC activation is by default five times the internal threshold level. It can be reduced to three times the internal level by setting bit B1 = 1 (agcr) in the *RX special setting* register (address 0A). The AGC action is fast, typically finishing after four sub-carrier pulses. By default, the AGC action is blocked after the first few pulses of the sub-carrier signal. This prevents the AGC from interfering with the reception of the remaining data packet. In certain situations, this type of blocking is not optimal, so it can be removed by setting B0 = 1 (no_lim) in the *RX special setting* register (address 0A).

The bits of the *RX special settings* register (address 0A), which control the receiver analog section, are shown in Table 5-20.

5.2.1 Received Signal Strength Indicator (RSSI)

The RSSI measurement block measures the demodulated signal (except in the case of a direct command for RF-amplitude measurement described in the *Direct Commands* section). The measuring system latches the peak value, so the RSSI level can be read after the end of the receive packet. The RSSI register values reset with every transmission by the reader. This allows an updated RSSI measurement for each new tag response.

Copyright © 2006–2010, Texas Instruments Incorporated

Correlation between the RF input level and RSSI designation levels on the RX_IN1 and RX_IN2 are shown in Table 5-6 and Table 5-7.

Table 5-6 shows the RSSI level versus RSSI bit value. The RSSI has seven levels (3 bits each) with 4-dB increments. The input level is the peak-to-peak modulation level of the RF signal as measured on one side envelope (positive or negative).

Table 5-6. RSSI Level Versus Register Bit Value

RSSI	1	2	3	4	5	6	7
Input level	2 mVpp	3.2 mVpp	5 mVpp	8 mVpp	13 mVpp	20 mVpp	32 mVpp

As an example, from Table 5-7, let B2 = 1, B1 = 1, B0 = 0; this yields an RSSI value of 6. From Table 5-6 a Bit value of 6 would yield an RSSI level of 20 mVpp.

Table 5-7. RSSI Bit Value and Oscillator Status Register (0F)

Bit	Signal Name	Function	Comments
B7	Unused		
B6	osc_ok	Crystal oscillator stable	
B5	rssi_x2	MSB of auxiliary receiver RSSI	4 dB per step
B4	rssi_x1	Auxiliary receiver RSSI	
B3	rssi_x1	LSB of auxiliary receiver RSSI	
B2	rssi_2	MSB of main receiver RSSI	
B1	rssi_1	Main receiver RSSI	
B0	rssi_0	LSB of main receiver RSSI	

5.2.2 Receiver – Digital Section

The received sub-carrier is digitized to form a digital representation of the modulated RF envelope. This digitized signal is applied to digital decoders and framing circuits for further processing.

The digital part of the receiver consists of two sections, which partly overlap. The first section is the bit decoders for the various protocols, whereas the second section consists of framing logic. The bit decoders convert the sub-carrier coded signal to a bit stream and also to the data clock. Thus, the sub-carrier-coded signal is transformed to serial data and the data clock is extracted. The decoder logic is designed for maximum error tolerance. This enables the decoders to successfully decode even partly corrupted (due to noise or interference) sub-carrier signals.

In the framing section, the serial bit-stream data is formatted in bytes. In this process, special signals like the start of frame (SOF), end of frame (EOF), start of communication, and end of communication are automatically removed. The parity bits and CRC bytes are checked and also removed. The end result is clean or raw data, which is sent to the 12-byte FIFO register where it can be read by the external microcontroller system.

The start of the receive operation (successfully received SOF) sets the flags in the *IRQ and status* register. The end of the receive operation is indicated to the external system (MCU) by sending an interrupt request (pin 13 IRQ). If the receive data packet is longer than 8 bytes, an interrupt is sent to the MCU when the received data occupies 75% of the FIFO capacity to signal that the data should be removed from the FIFO.

Any error in data format, parity, or CRC is detected, and the external system is notified of the error by an interrupt-request pulse. The source condition of the interrupt-request pulse is available in the *IRQ and status* register (address 0C). The bit-coding description of this register is given in Table 5-22.

Copyright © 2006–2010, Texas Instruments Incorporated

The main register controlling the digital part of the receiver is the *ISO control* register (address 01). By writing to this register, the user selects the protocol to be used. With each new write in this register, the default presets are loaded in all related registers, so no further adjustments in other registers are needed for proper operation.

Table 5-10 shows the coding of the *ISO control* register. Note that the TRF7961 does not include the ISO14443 functionality; its features/commands in this area are non-functional.

The framing section also supports the bit-collision detection as specified in ISO14443A. When a bit collision is detected, an interrupt request is sent and flag set in the *IRQ and status* register. The position of the bit collision is written in two registers. Register *collision position*, with address 0E, and in register *collision position and interrupt mask* (address 0D), in which only the bits B7 and B6 are used for collision position. The collision position is presented as a sequential bit number, where the count starts immediately after the start bit. For example, the collision in the first bit of the UID would give the value 00 0001 0000 in the collision-position registers. The count starts with 0, and the first 16 bits are the command code and the NVB byte. Note: the NVB byte is the number of valid bits.

The receive section also has two timers. The RX-wait-time timer is controlled by the value in the *RX wait time* register (address 08). This timer defines the time after the end of the transmit operation in which the receive decoders are not active (held in reset state). This prevents incorrect detections resulting from transients following the transmit operation. The value of the *RX wait time* register defines this time in increments of 9.44 µs. This register is preset at every write to *ISO control* register (address 01) according to the minimum tag-response time defined by each standard.

The RX no-response timer is controlled by the *RX no response wait time* register (address 07). This timer measures the time from the start of slot in the anti-collision sequence until the start of tag response. If there is no tag response in the defined time, an interrupt request is sent and a flag is set in *IRQ status control* register. This enables the external controller to be relieved of the task of detecting empty slots. The wait time is stored in the register in increments of 37.76 µs. This register is also preset, automatically, for every new protocol selection.

5.2.3 Transmitter

The transmitter section consists of the 13.56-MHz oscillator, digital protocol processing, and RF output stage.

5.2.3.1 Transmitter – Analog

The 13.56-MHz crystal oscillator (connected to pins 31 and 32) directly generates the RF frequency for the RF output stage. Additionally, it also generates the clock signal for the digital section and clock signal displayed for the SYS_CLK (pin 27) which can be used by an external MCU system.

During partial power-down mode (EN = 0, EN2 = 1), the frequency of SYS_CLK is 60 kHz. During normal reader operation, SYS_CLK can be programmed by bits B4 and B5 in the *modulator and SYS_CLK control* register (address 09); available clock frequencies are 13.56 MHz, 6.78 MHz, or 3.39 MHz.

The reference crystal (HC49U) should have the following characteristics:

Parameter	Specification
Frequency	13.560000 MHz
Mode of operation	Fundamental
Type of resonance	Parallel
Frequency tolerance	±20 ppm
Aging	< 5 ppm/year
Operation temperature range	–40°C to 85°C
Equivalent series resistance	50 Ω, minimum

NOTE

The crystal oscillator's two external shunt capacitor values are calculated based on the crystal's specified load capacitance. The external capacitors (connected to the OSC pins 30 and 31), are calculated as two capacitors in series plus C_S (oscillator's gate internal input/output capacitance plus PCB stray capacitance). The stray capacitance (C_S) can be estimated at approximately 5 ±2 pF (typical).

As an example, given a crystal with a required load capacitance (C_L) of 18 pF,

$C_L = ((C_1 \times C_2) / (C_1 + C_2)) + C_S$

18 pF = ((27 pF × 27 pF) / (27 pF + 27 pF)) + 4.5 pF

Hence, from this example, a 27-pF capacitor would be placed on pins 30 and 31 to ensure proper crystal oscillator operation.

The transmit power level is selectable between half power of 100 mW (20 dBm) or full power of 200 mW (23 dBm) when configured for 5-V automatic operation. The transmit output impedance is 8 Ω when configured for half power and 4 Ω when configured for full power. Selection of the transmit power level is set by bit B4 (rf_pwr) in the *chip status control* register (Table 5-9). When configured for 3-V automatic operation, the transmit power level is typically selectable between 33 mW (15 dBm) in half-power mode and 70 mW (18 dBm) in full-power mode (Vdd_RF at 3.3 V). Note that lower operating voltages result in reduced transmit power levels.

In normal operation, the transmit modulation is configured by the selected *ISO control* register (address 01). External control of the transmit modulation is possible by setting the *ISO control* register (address 01) to direct mode. While in direct mode, the transmit modulation is made possible by selecting the modulation type ASK or OOK at pin 12. External control of the modulation type is made possible only if enabled by setting B6 = 1 (en_ook_p) in the *modulator and SYS_CLK control* register (address 09). ASK modulation depth is controlled by bits B0, B1 and B2 in the *Modulator and SYS_CLK Control* register (address 09). The range of the ASK modulation is 7%–30%, or 100% (OOK).

The coding of the *modulator and SYS_CLK control* register is shown in Table 5-19.

The length of the modulation pulse is defined by the protocol selected in the *ISO control* register. With a high-Q antenna, the modulation pulse is typically prolonged, and the tag detects a longer pulse than intended. For such cases, the modulation pulse length can be corrected by using the *TX pulse length* register. If the register contains all zeros, then the pulse length is governed by the protocol selection. If the register contains a value other than 00h, the pulse length is equal to the value of the register in 73.7-ns increments. This means the range of adjustment can be between 73.7 ns and 18.8 µs.

5.2.3.2 Transmitter - Digital

The digital portion of the transmitter is very similar to that of the receiver. Before beginning data transmission, the FIFO should be cleared with a Reset command (0F). Data transmission is initiated with a selected command (described in the Direct Commands section, Table 5-29). The MCU then commands the reader to do a continuous Write command (3Dh, see Table 5-31) starting from register 1Dh. Data written into register 1Dh is the *TX length byte1* (upper and middle nibbles), while the following byte in register 1Eh is the *TX length byte2* (lower nibble and broken byte length). The TX byte length determines when the reader sends the EOF byte. After the TX length bytes, FIFO data is loaded in register 1Fh with byte storage locations 0 to 11. Data transmission begins automatically after the first byte is written into the FIFO. The *TX length* bytes and FIFO can be loaded with a continuous-write command because the addresses are sequential.

If the data length is longer than the allowable size of the FIFO, the external system (MCU) is warned when the majority of data from the FIFO has already been transmitted by sending an interrupt request with a flag in the IRQ register signaling FIFO low/high status. The external system should respond by loading the next data packet into the FIFO.

 Copyright © 2006–2010, Texas Instruments Incorporated

At the end of the transmit operation, the external system is notified by another interrupt request with a flag in the IRQ register that signals the end of TX.

The *TX length* register also supports incomplete bytes transmitted. The high two nibbles in register 1D and the nibble composed of bits B4–B7 in register 1E store the number of complete bytes to be transmitted. Bit 0 (in register 1E) is a flag that signals the presence of additional bits to be transmitted that do not form a complete byte. The number of bits are stored in bits B1–B3 of the same register (1E).

The protocol is selected by the *ISO control* register (address 01), which also selects the receiver protocol. As defined by the selected protocol, the reader automatically adds all the special signals, like start of communication, end of communication, SOF, EOF, parity bits, and CRC bytes. The data is then coded to the modulation pulse level and sent to the modulation control of the RF output stage. This means that the external system is only required to load the FIFO with data, and all the low-level coding is done automatically. Also, all registers used in transmission are automatically preset to the optimum value when a new selection is entered into the *ISO control* register.

Some protocols have options; two registers are provided to select the TX-protocol options. The first such register is *ISO14443B TX options* (address 02). It controls the SOF and EOF selection and EGT (extra guard time) selection for the ISO14443B protocol. The bit definitions of this register are given in Table 5-12.

The second register controls the ISO14443 high bit-rate options. This register enables the use of different bit rates for RX and TX operations in the ISO14443 high bit-rate protocol. Additionally, it also selects the parity system for the ISO14443A high bit-rate selection. The bit definitions of this register are given in Table 5-13.

The transmit section also has a timer that can be used to start the transmit operation at a precise time interval from a selected event. This is necessary if the tag requires a reply in an exact window of time following the tag response. The *TX timer* uses two registers (addresses 04 and 05). In first register (address 04); two bits (B7 and B6) are used to define the trigger conditions. The remaining 6 bits are the upper bits and the 8 bits in register address 05 are lower bits, which are preset to the counter. The increment is 590 ns and the range of this counter is from 590 ns to 9.7 ms. The bit definitions (trigger conditions) are shown in Table 5-14.

Copyright © 2006–2010, Texas Instruments Incorporated

5.2.4 Direct Mode

Direct mode allows the user to configure the reader in one of two ways. *Direct mode 0* (bit 6 = 0, as defined in *ISO control* register) allows the user to use only the front-end functions of the reader, bypassing the protocol implementation in the reader. For transmit functions, the user has direct access to the transmit modulator through the MOD pin (pin 14). On the receive side, the user has direct access to the sub-carrier signal (digitized RF envelope signal) on I/O_6 (pin 23).

Direct mode1 (bit 6 = 1, as defined in *ISO control* register) uses the sub-carrier signal decoder of the selected protocol (as defined in *ISO control* register). This means that the receive output is not the sub-carrier signal but the decoded serial bit stream and bit clock signals. The serial data is available on I/O_6 (pin 23) and the bit clock is available on I/O_5 (pin 22). The transmit side is identical; the user has direct control over the RF modulation through the MOD input. This mode is provided so that the user can implement a protocol that has the same bit coding as one of the protocols implemented in the reader, but needs a different framing format.

To select direct mode, the user must first choose which direct mode to enter by writing B6 in the *ISO control* register. This bit determines if the receive output is the direct sub-carrier signal (B6 = 0) or the serial data of the selected decoder. If B6 = 1, then the user must also define which protocol should be used for bit decoding by writing the appropriate setting in the *ISO control* register.

The reader actually enters the direct mode when B6 (direct) is set to 1 in the *chip status control* register. Direct mode starts immediately. The write command should not be terminated with a stop condition (see communication protocol), because the stop condition terminates the direct mode and clears B6. This is necessary as the direct mode uses one or two I/O pins (I/O_6, I/O_5). Normal parallel communication is not possible in direct mode. Sending a stop condition terminates direct mode.

Figure 5-4 shows the different configurations available in direct mode.

- In mode 0, the reader is used as an AFE only, and protocol handling is bypassed.
- In mode 1, framing is not done, but SOF and EOF are present. This allows for a user-selectable framing level based on an existing ISO standard.
- In mode 2, data is ISO-standard formatted. SOF, EOF, and error checking are removed, so the microprocessor receives only bytes of raw data via a 12-byte FIFO.

Copyright © 2006–2010, Texas Instruments Incorporated

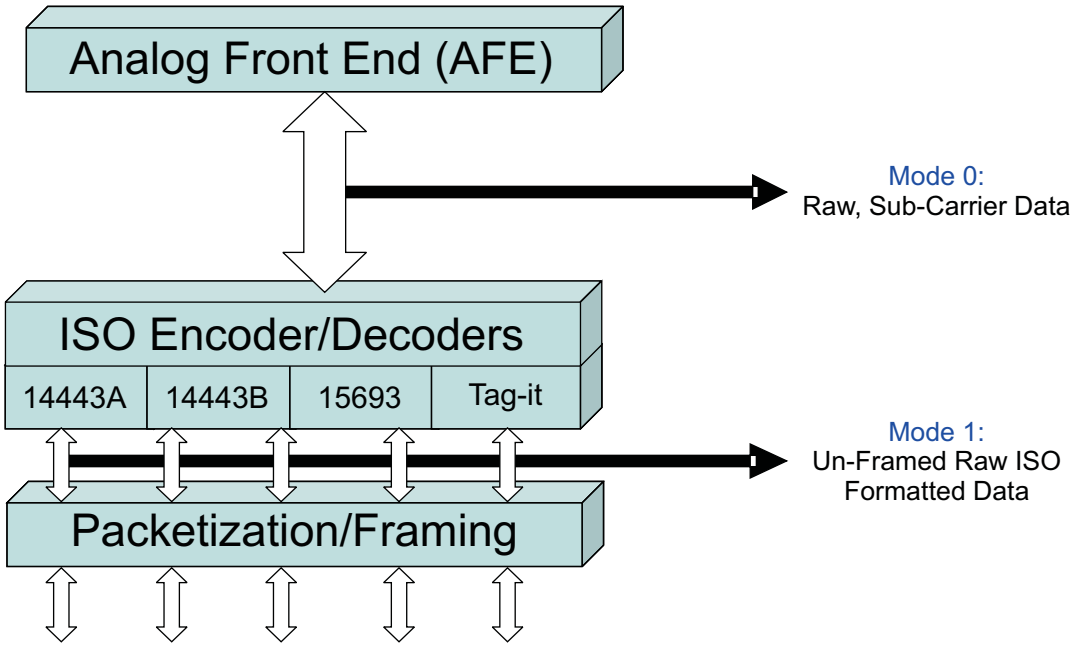

Mode 2: Full ISO With Framing and Error Checking (Typical Mode)

Figure 5-4. User-Configurable Modes

5.2.5 Register Preset

After power-up and the EN pin low-to-high transition, the reader is in the default mode. The default configuration is ISO15693, single sub-carrier, high data rate, 1-out-of-4 operation. The low-level option registers (02…0B) are automatically set to adapt the circuitry optimally to the appropriate protocol parameters.

When entering another protocol (writing to the *ISO control* register 01), the low-level option registers (02…0B) are automatically configured to the new protocol parameters.

After selecting the protocol, it is possible to change some low-level register contents if needed. However, changing to another protocol and then back, reloads the default settings, and the user must reload the custom settings.

The Clo1 and Clo0 (register 09) bits, which define the microcontroller frequency available on the SYS_CLK pin, are the only two bits in the configuration registers that are not cleared during protocol selection.

5.3 Register Descriptions

Table 5-8. Register Address Space

Adr (hex)	Register	Read/Write
Main Control Registers		
00	Chip status control	R/W
01	ISO control	R/W
Protocol Sub-Setting Registers		
02	ISO14443B TX options	R/W
03	ISO 14443A high bit rate options	R/W
04	TX timer setting, H-byte	R/W
05	TX timer setting, L-byte	R/W
06	TX pulse-length control	R/W
07	RX no response wait	R/W
08	RX wait time	R/W
09	Modulator and SYS_CLK control	R/W
0A	RX special setting	R/W
0B	Regulator and I/O control	R/W
16	Unused	NA
17	Unused	NA
18	Unused	NA
19	Unused	NA
Status Registers		
0C	IRQ status	R
0D	Collision position and interrupt mask register	R/W
0E	Collision position	R
0F	RSSI levels and oscillator status	R
FIFO Registers		
1C	FIFO status	R
1D	TX length byte1	R/W
1E	TX length byte2	R/W
1F	FIFO I/O register	R/W

Copyright © 2006–2010, Texas Instruments Incorporated

5.3.1 Control Registers – Main Configuration Registers

Table 5-9. Chip Status Control (00h)

Controls the power mode, RF on / off, AGC, AM / PM			
Register default is 0x01. It is preset at EN = L or POR = H			
Bit	**Bit Name**	**Function**	**Comments**
B7	stby	1 = standby mode 0 = active mode	Standby mode keeps regulators and oscillator running en_rec = L, en_tx = L
B6	direct	1 = received sub-carrier signal (decoders bypassed) 0 = received decoded signal from selected decoder	The modulation control is direct through MOD input. The receiver sub-carrier signal is on I/0_6.
B5	rf_on	1 = RF output active 0 = RF output not active	When B5 = 1, it activates the RF field.
B4	rf_pwr	1 = half output power 0 = full output power	1 = RF driver at 8 Ω 0 = RF driver at 4 Ω
B3	pm_on	1 = RX_IN2 0 = RX_IN1	1 = Selects PM signal input 0 = Selects AM signal input
B2	agc_on	1 = AGC on 0 = AGC off	AGC selection
B1	rec_on	1 = Reciever enable for external field measurement	Receiver and oscillator are enabled; intended for external field measurement.
B0	vrs5_3	1 = 5 V operation (V_{IN}) 0 = 3 V operation (V_{IN})	Selects the V_{DD_RF} range; 5 V (4.3 V – 5 V), or 3 V (2.7 V – 3.4 V)

Table 5-10. ISO Control (01h)

Controls the ISO selection			
Register default is 0x02, which is ISO15693 high bit rate, one sub-carrier, 1 out of 4. It is preset at EN = L or POR = H.			
Bit	**Bit Name**	**Function**	**Comments**
B7	rx_crc_n	Receiving without CRC	1 = no RX CRC 0 = RX CRC
B6	dir_mode	Direct mode type	0 = output is sub-carrier data. 1 = output is bit stream (I/O_6) and bit clock (I/O_5) from decoder selected by ISO bits
B5	rfid	RFID mode	Should always be set to 0
B4	iso_4	RFID mode	See Table 5-11
B3	iso_3		
B2	iso_2		
B1	iso_1		
B0	iso_0		

Table 5-11. RFID Mode Selections

Iso_4	Iso_3	Iso_2	Iso_1	Iso_0	Protocol				Remarks
0	0	0	0	0	ISO15693 low bit rate	6.62 kbps	one sub-carrier	1 out of 4	
0	0	0	0	1	ISO15693 low bit rate	6.62 kbps	one sub-carrier	1 out of 256	
0	0	0	1	0	ISO15693 high bit rate	26.48 kbps	one sub-carrier	1 out of 4	Default for reader
0	0	0	1	1	ISO15693 high bit rate	26.48 kbps	one sub-carrier	1 out of 256	
0	0	1	0	0	ISO15693 low bit rate	6.67 kbps	double sub-carrier	1 out of 4	
0	0	1	0	1	ISO15693 low bit rate	6.67 kbps	double sub-carrier	1 out of 256	
0	0	1	1	0	ISO15693 high bit rate	26.69 kbps	double sub-carrier	1 out of 4	
0	0	1	1	1	ISO15693 high bit rate	26.69 kbps	double sub-carrier	1 out of 256	
0	1	0	0	0	ISO14443A bit rate	106 kbps			RX bit rate when TX bit rate is different than RX (reg03)
0	1	0	0	1	ISO14443A high bit rate	212 kbps			
0	1	0	1	0	ISO14443A high bit rate	424 kbps			
0	1	0	1	1	ISO14443A high bit rate	848 kbps			
0	1	1	0	0	ISO14443B bit rate	106 kbps			RX bit rate when TX bit rate is different than RX (reg03)
0	1	1	0	1	ISO14443B high bit rate	212 kbps			
0	1	1	1	0	ISO14443B high bit rate	424 kbps			
0	1	1	1	1	ISO14443B high bit rate	848 kbps			
1	0	0	1	1	Tag-it				

Copyright © 2006–2010, Texas Instruments Incorporated

5.3.2 Control Registers – Sub Level Configuration Registers

Table 5-12. ISO14443B TX Options (02h)

Selects the ISO subsets for ISO14443B – TX			
Register default is set to 0x00 at POR = H or EN = L			
Bit	**Bit Name**	**Function**	**Comments**
B7	egt2	TX EGT time select MSB	Three bit code defines the number of *etu* (0-7) which separate two characters. ISO14443B TX only
B6	egt1	TX EGT time select	
B5	egt0	TX EGT time select LSB	
B4	eof_l0	1 = EOF, 0 length 11 etu	ISO14443B TX only
		0 = EOF, 0 length 10 etu	
B3	sof_l1	1 = SOF, 1 length 03 etu	
		0 = SOF, 1 length 02 etu	
B2	sof _l0	1 = SOF, 0 length 11 etu	
		0 = SOF, 0 length 10 etu	
B1	l_egt	1 = EGT after each byte	
		0 = EGT after last byte is omitted	
B0	Unused		

Table 5-13. ISO 14443A High-Bit-Rate Options (03h)

Parity			
Register default is set to 0x00 at POR = H, or EN = L and at each write to *ISO control* register			
Bit	**Bit Name**	**Function**	**Comments**
B7	dif_tx_br	TX bit rate different than RX bit rate enable	Valid for ISO14443A/B high bit rate
B6	tx_br1	TX bit rate	tx_br1 = 0, tx_br = 0 106 kbps tx_br1 = 0, tx_br = 1 212 kbps tx_br1 = 1, tx_br = 0 424 kbps tx_br1 = 1, tx_br = 1 848 kbps
B5	tx_br0		
B4	parity-2tx	1 = parity odd except last byte which is even for TX	For 14443A high bit rate, coding and decoding
B3	parity-2rx	1 = parity odd except last byte which is even for RX	
B2	Unused		
B1	Unused		
B0	Unused		

Table 5-14. TX Timer H-Byte (04h)

Register default is set to 0xC2 at POR = H or EN = L and at each write to *ISO control* register			
Bit	**Bit Name**	**Function**	**Comments**
B7	Tm_st1	Timer start condition	tm_st1 = 0, tm_st0 = 0 beginning of TX SOF tm_st1 = 0, tm_st0 = 1 end of TX SOF tm_st1 = 1, tm_st0 = 0 beginning of RX SOF tm_st1 = 1, tm_st0 = 1 end of RX SOF
B6	Tm_st0	Timer start condition	
B5	Tm_lengthD	Timer length MSB	
B4	Tm_lengthC	Timer length	
B3	Tm_lengthB	Timer length	
B2	Tm_lengthA	Timer length	
B1	Tm_length9	Timer length	
B0	Tm_length8	Timer length LSB	

Copyright © 2006–2010, Texas Instruments Incorporated

Table 5-15. TX Timer L-Byte (05h)

Register default is set to 0x00 at POR = H or EN = L and at each write to *ISO control* register			
Bit	**Bit Name**	**Function**	**Comments**
B7	Tm_length7	Timer length MSB	Defines the time when delayed transmission is started. RX wait range is 590 ns to 9.76 ms (1..16383) Step size 590 ns All bits low (00): Timer is disabled. Preset: 00 all other protocols
B6	Tm_length6	Timer length	
B5	Tm_length5	Timer length	
B4	Tm_length4	Timer length	
B3	Tm_length3	Timer length	
B2	Tm_length2	Timer length	
B1	Tm_length1	Timer length	
B0	Tm_length0	Timer length LSB	

Table 5-16. TX Pulse Length Control (06h)

Controls the length of TX pulse			
Register default is set to 0x00 at POR = H or EN = L and at each write to *ISO control* register.			
Bit	**Bit Name**	**Function**	**Comments**
B7	Pul_p2	Pulse length MSB	The pulse range is 73.7 ns to 18.8 µs (1…255), step size 73.7 ns All bits low (00): pulse length control is disabled Preset: 9.44 µs ISO15693 Preset: 11 µs Tag-It Preset: 2.36 µs ISO14443A Preset: 1.4 µs ISO14443A at 212 kbps Preset: 737 ns ISO14443A at 424 kbps Preset: 442 ns ISO14443A at 848 kbps): pulse length control is disabled
B6	Pul_p1		
B5	Pul_p0		
B4	Pul_c4		
B3	Pul_c3		
B2	Pul_c2		
B1	Pul_c1		
B0	Pul_c0	Pulse length LSB	

Table 5-17. RX No Response Wait Time (07h)

Defines the time when *no response* Interrupt is sent			
Default: default is set to 0x0E at POR = H or EN = L and at each write to *ISO control* register.			
Bit	**Bit Name**	**Function**	**Comments**
B7	NoResp7	No response MSB	Defines the time when *no response* interrupt is sent It starts from the end of TX EOF. RX no response wait range is 37.76 µs to 962 8µs (1...255), Step size 37.76 µs Preset: 755 µs ISO15693 Preset: 1812 µs ISO15693 low data rate Preset: 604 µs Tag-It Preset: 529 µs all other protocols
B6	NoResp6		
B5	NoResp5		
B4	NoResp4		
B3	NoResp3		
B2	NoResp2		
B1	NoResp1		
B0	NoResp0	No response LSB	

Copyright © 2006–2010, Texas Instruments Incorporated

Table 5-18. RX Wait Time (08h)

Defines the time after TX EOF when the RX input is disregarded			
Register default is set to 0x1F at POR = H or EN = L and at each write to *ISO control* register.			
Bit	**Bit Name**	**Function**	**Comments**
B7	Rxw7	RX wait	Defines the time during which the RX input is ignored. It starts from the end of TX EOF. RX wait range is 9.44 µs to 2407 µs (1...255), Step size 9.44 µs Preset: 293 µs ISO15693 Preset: 66 µs ISO14443A and B Preset: 180 µs Tag-It
B6	Rxw6		
B5	Rxw5		
B4	Rxw4		
B3	Rxw3		
B2	Rxw2		
B1	Rxw1		

Table 5-19. Modulator and SYS_CLK Control (09h)

Controls the modulation depth, modulation input and ASK / OOK control			
Register default is set to 0x11 at POR = H or EN = L, and at each write to *ISO control* register, except Clo1 and Clo0.			
Bit	**Bit Name**	**Function**	**Comments**
B7	Unused		
B6	en_ook_p	1 = enables external selection of ASK or OOK modulation	Valid only when ISO control register (01) is configured to direct mode
B5	Clo1	SYS_CLK output frequency MSB	**Clo1 / Clo0 / CL_SYS Output state** 0 / 0 / disabled 0 / 1 / 3.3 MHz 1 / 0 / 6.78 MHz 1 / 1 / 13.56 MHz
B4	Clo0	SYS_CLK output frequency LSB	
B3	en_ana	1 = Enables analog output on ASK/OOK pin (pin12)	For test and measurement
B2	Pm2	Modulation depth MSB	**Pm2 / Pm1 / Pm0 / Mod Type and %** 0 / 0 / 0 / ASK 10% 0 / 0 / 1 / OOK (100%) 0 / 1 / 0 / ASK 7% 0 / 1 / 1 / ASK 8.5% 1 / 0 / 0 / ASK 13% 1 / 0 / 1 / ASK 16% 1 / 1 / 0 / ASK 22% 1 / 1 / 1 / ASK 30%
B1	Pm1	Modulation depth	
B0	Pm0	Modulation depth LSB	

Table 5-20. RX Special Setting Register (Address 0Ah)

Sets the gains and filters directly			
Register default is set to 0x40 at POR = H or EN = L, and at each write to the *ISO control* register.			
Bit	**Bit Name**	**Function**	**Comments**
B7	C212	Bandpass 110 kHz to 570 kHz	Appropriate for 212-kHz sub-carrier system
B6	C424	Bandpass 200 kHz to 900 kHz	Appropriate for 424-kHz sub-carrier used in ISO15693 and Tag-It
B5	M848	Bandpass 450 kHz to 1.5 MHz	Appropriate for Manchester-coded 848-kHz sub-carrier used in ISO14443A
B4	hbt	Bandpass 100 kHz to 1.5 MHz Gain reduced for 7 dB	Appropriate for highest bit rate (848 kbps) used in high-bit-rate ISO14443
B3	gd1	01 gain reduction for 5 dB 10 gain reduction for 10 dB 11 gain reduction for 15 dB	Sets the RX gain reduction
B2	gd2		
B1	agcr	AGC activation level change	AGC activation level changed from 5 times the digitizing level to 3 times the digitizing level.
B0	no-lim	AGC action is not limited in time	AGC action can be done any time during receive process. It is not limited to the start of receive.

Table 5-21. Regulator and I/O Control (0Bh)

Control the three voltage regulators			
Register default is set to 0x87 at POR = H or EN = L			
Bit	**Bit Name**	**Function**	**Comments**
B7	auto_reg	0 = setting regulator by option bits (vrs3_5 and vrs2, vrs1 and vrs0) 1 = automatic setting	Auto system sets VDD_RF to VIN – 250 mV and VDD_A and VDD_X to VIN – 250 mV, but not higher than 3.4 V.
B6	en_ext_pa	Support for external power amplifier	Receiver inputs accept externally demodulated sub-carrier, OOK pin becomes modulation output for external amplifier.
B5	io_low	1 = enable low peripheral communication voltage	When HIGH, it decreases output resistance of logic outputs. Should be set HIGH when VDD_I/O voltage is below 2.7 V.
B4	Unused		Default is LOW.
B3	Unused		Default is LOW.
B2	vrs2	Voltage set MSB	vrs3_5 = L: VDD_RF, VDD_A, VDD_X range 2.7 V to 3.4 V
B1	vrs1		
B0	vrs0	Voltage set LSB	

Copyright © 2006–2010, Texas Instruments Incorporated

5.3.3 Status Registers

Table 5-22. IRQ Status Register (0Ch)

Displays the cause of IRQ and TX/RX status			
Register default is set to 0x00 at POR = H or EN = L, and at each write to the *ISO control* register. It is also automatically reset at the end of a read phase. The reset also removes the IRQ flag.			
Bit	**Bit Name**	**Function**	**Comments**
B7	Irq_tx	IRQ set due to end of TX	Signals that TX is in progress. The flag is set at the start of TX but the interrupt request is sent when TX is finished.
B6	Irg_srx	IRQ set due to RX start	Signals that RX SOF was received and RX is in progress. The flag is set at the start of RX but the interrupt request is sent when RX is finished.
B5	Irq_fifo	Signals the FIFO is 1/3 > FIFO > 2/3	Signals FIFO high or low (less than 4 or more than 8)
B4	Irq_err1	CRC error	Indicates receive CRC error
B3	Irq_err2	Parity error	Indicates parity error
B2	Irq_err3	Byte framing or EOF error	Indicates framing error
B1	Irq_col	Collision error	For ISO14443A and ISO15693 single sub-carrier
B0	Irq_noresp	*No-response* interrupt	Signal to MCU that next slot command can be sent

Table 5-23. Collision Position and Interrupt Mask Register (0Dh)

Register default is set to 3E at POR = H and EN = L. Collision bits reset automatically after read operation.			
Bit	**Bit Name**	**Function**	**Comments**
B7	Col9	Bit position of collision MSB	Supported: ISO15693, single sub-carrier, and ISO14443A
B6	Col8	Bit position of collision	
B5	En_irq_fifo	Interrupt enable for FIFO	
B4	En_irq_err1	Interrupt enable for CRC	
B3	En_irq_err2	Interrupt enable for Parity	
B2	En_irq_err3	Interrupt enable for Framing error or EOF	
B1	En_irq_col	Interrupt enable for collision error	
B0	En_irq_noresp	Enables no-response interrupt	

Table 5-24. Collision Position (0Eh)

Displays the bit position of collision or error			
Register default is set to 0x00 at POR = H and EN = L. Automatically reset after read operation.			
Bit	**Bit Name**	**Function**	**Comments**
B7	Col7	Bit position of collision MSB	Supported is ISO15693, single sub-carrier, and ISO14443A In other protocols, it shows the bit position of error, either frame, SOF-EOF, parity, or CRC error.
B6	Col6		
B5	Col5		
B4	Col4		
B3	Col3		
B2	Col2		
B1	Col1		
B0	Col0	Bit position of collision LSB	

Table 5-25. RSSI Levels and Oscillator Status Register (0Fh)

Displays the signal strength on both reception channels and RF amplitude during RF-off state			
The RSSI values are valid from reception start till start of next transmission.			
Bit	**Bit Name**	**Function**	**Comments**
B7	Unused		
B6	Oscok	Crystal oscillator stable indicator	
B5	rssi_x2	RSSI value of auxiliary channel (4 dB per step) MSB	Auxiliary channel is by default PM. It can be set to AM with B3 of *chip state control* register (00).
B4	rssi_x1		
B3	rssi_x0	RSSI value of auxiliary channel (4 dB per step) LSB	
B2	rssi_2	RSSI value of active channel (4 dB per step) MSB	Active channel is default AM and can be set to PM with option bit B3 of *chip state control* register (00).
B1	rssi_1		
B0	rssi_0	RSSI value of active channel (4 dB per step) LSB	

Copyright © 2006–2010, Texas Instruments Incorporated

5.3.4 FIFO Control Registers

Table 5-26. FIFO Status (1Ch)

Low nibbles of complete bytes to be transferred through FIFO; Information about a broken byte and number of bits to be transferred from it			
Bit	**Bit Name**	**Function**	**Comments**
B7	RFU	Set to LOW	Reserved for future use (RFU)
B6	Fhil	FIFO level HIGH	Indicates that 9 bytes are already in the FIFO (for RX)
B5	Flol	FIFO level LOW	Indicates that only 3 bytes are in the FIFO (for TX)
B4	Fove	FIFO overflow error	Too much data was written to the FIFO
B3	Fb3	FIFO bytes fb[3]	Bits B0:B3 indicate how many bytes that are loaded in FIFO were not read out yet (displays N – 1 number of bytes). If 8 bytes are in the FIFO, this number is 7.
B2	Fb2	FIFO bytes fb[2]	
B1	Fb1	FIFO bytes fb[1]	
B0	Fb0	FIFO bytes fb[0]	

Table 5-27. TX Length Byte1 (1Dh)

High 2 nibbles of complete bytes to be transferred through FIFO			
Register default is set to 0x00 at POR and EN=0. It is also automatically reset at TX EOF			
Bit	**Bit Name**	**Function**	Comments
B7	Txl11	Number of complete byte bn[11]	High nibble of complete bytes to be transmitted
B6	Txl10	Number of complete byte bn[10]	
B5	Txl9	Number of complete byte bn[9]	
B4	Txl8	Number of complete byte bn[8]	
B3	Txl7	Number of complete byte bn[7]	Middle nibble of complete bytes to be transmitted
B2	Txl6	Number of complete byte bn[6]	
B1	Txl5	Number of complete byte bn[5]	
B0	Txl4	Number of complete byte bn[4]	

Table 5-28. TX Length Byte2 (1Eh)

Low nibbles of complete bytes to be transferred through FIFO; Information about a broken byte and number of bits to be transferred from it			
Register default is set to 0x00 at POR and EN=0. It is also automatically reset at TX EOF			
Bit	**Bit Name**	**Function**	Comments
B7	Txl3	Number of complete byte bn[3]	Low nibble of complete bytes to be transmitted
B6	Txl2	Number of complete byte bn[2]	
B5	Txl1	Number of complete byte bn[1]	
B4	Txl0	Number of complete byte bn[0]	
B3	Bb2	Broken byte number of bits bb[2]	Number of bits in the last broken byte to be transmitted.
B2	Bb1	Broken byte number of bits bb[1]	It is taken into account only when broken byte flag is set.
B1	Bb0	Broken byte number of bits bb[0]	
B0	Bbf	Broken byte flag	If *1,* indicates that last byte is not complete 8 bits wide.

Copyright © 2006–2010, Texas Instruments Incorporated

5.4 Direct Commands From MCU to Reader

5.4.1 Command Codes

Table 5-29. Command Codes

Command Code (hex)	Command	Comments
00	Idle	
03	Software Initialization	Software initialization, same as power on reset
0F	Reset	
10	Transmission without CRC	
11	Transmission with CRC	
12	Delayed transmission without CRC	
13	Delayed transmission with CRC	
14	Transmit next time slot	ISO15693, Tag-It
16	Block receiver	
17	Enable receiver	
18	Test internal RF (RSSI at RX input with TX ON)	
19	Test external RF (RSSI at RX input with TX OFF)	
1A	Receiver gain adjust	

Note: The command code values from Table 5-29 are substituted in Table 5-32, bit 0 through bit 4. Also, the most-significant bit (MSB) in Table 5-31 must be set to 1.

5.4.2 Reset

The reset command clears the FIFO contents and FIFO status register (1Ch). It also clears the register storing the collision error location (0Eh).

5.4.3 Transmission With CRC

The transmission command must be sent first, followed by transmission length bytes, and FIFO data. The reader starts transmitting after the first byte is loaded into the FIFO. The CRC byte is included in the transmitted sequence.

5.4.4 Transmission Without CRC

Same as Section 5.4.3 with CRC excluded.

5.4.5 Delayed Transmission With CRC

The transmission command must be sent first, followed by the transmission length bytes, and FIFO data. The reader transmission is triggered by the TX timer.

5.4.6 Delayed Transmission Without CRC

Same as above with CRC excluded.

5.4.7 Transmission Next Slot

When this command is received, the reader transmits the next slot command. The next slot sign is defined by the protocol selection.

5.4.8 Receiver Gain Adjust

This command should be executed when the MCU determines that no TAG response is coming and when

Copyright © 2006–2010, Texas Instruments Incorporated

the RF and receivers are switched ON. When this command is received, the reader observes the digitized receiver output. If more than two edges are observed in 100 µs, the window comparator voltage is increased. The procedure is repeated until the number of edges (changes of logical state) of the digitized reception signal is less than 2 (in 100 µs). The command can reduce the input sensitivity in 5-dB increments up to 15 dB. This command ensures better operation in a noisy environment.

The gain setting is reset to maximum gain at EN = 0, POR = 1.

5.4.9 Test External RF (RSSI at RX input with TX OFF)

This command can be used in active mode when the RF receiver is switched ON, and the RF output is switched OFF (bit B1=1 in the chip status register, rec-on. See Table 5-9). The level of the RF signal received on the antenna is measured and displayed in the *RSSI levels* register. The relation between the 3-bit code and the external RF field strength [A/m] must be determined by calculation or by experiments for each antenna design. The antenna Q and connection to the RF input influence the result. The nominal relation between the RF peak-to-peak voltage at the receiver inputs and its corresponding RSSI level is presented as follows.

Receiver Input [mV_{PP}]	40	60	80	100	140	180	300
RSSI level	1	2	3	4	5	6	7

If the direct command *test RF internal* or *test RF external* is used immediately after activation, it should be preceded with a command *enable RX* to activate the RX section. For proper execution of the *test RF* commands, the RX section must be enabled. This happens automatically when a data exchange between the reader and the tag is done, or by sending a direct command *enable RX*.

5.4.10 Test Internal RF (RSSI at RX input with TX ON)

This command measures the level of the RF carrier at the receive inputs. Its operating range is between 300 mVp and 2.1 Vp with a step size of 300 mV. The two values are displayed in the *RSSI levels* register. The command is intended for diagnostic purposes to set the correct RX_IN levels. The optimum RX_IN input level is approximately 1.6 Vp, or an RSSI level of 5 or 6. The nominal relationship between the input RF peak level and the RSSI code is presented as follows.

Receiver Input [mV_{Pp}]	300	600	900	1200	1500	1800	2100
RSSI Level	1	2	3	4	5	6	7

5.4.11 Block Receiver

The block receiver command puts the digital part of receiver (bit decoder and framer) in reset mode. This is useful in an extremely noisy environment, where the noise level could otherwise cause a constant switching of the sub-carrier input of the digital part of the receiver. The receiver (if not in reset) would try to *catch* a SOF signal, and if the noise pattern matched the SOF pattern, an interrupt would be generated, falsely signaling the start of an RX operation. A constant flow of interrupt requests can be a problem for the external system (MCU), so the external system can stop this by putting the receive decoders in reset mode. The reset mode can be terminated in two ways. The external system can send the *enable receiver* command. The reset mode is also automatically terminated at the end of a TX operation. The receiver can stay in reset after end of TX if the *RX wait time* register (address 08) is set. In this case, the receiver is enabled at the end of the wait time following the transmit operation.

5.4.12 Enable Receiver

This command clears the reset mode in the digital part of the receiver if the reset mode was entered by the *block receiver* command.

Copyright © 2006–2010, Texas Instruments Incorporated

5.5 Reader Communication Interface

5.5.1 Introduction

The communication interface to the reader can be configured in two ways: a parallel 8-pin interface and a Data_Clk or a serial peripheral interface (SPI).

These modes are mutually exclusive; only one mode can be used at a time in the application.

When the SPI interface is selected, the unused I/O_2, I/O_1, and I/O_0 pins must be hard-wired according to Table 5-30. At power up, the reader samples the status of these three pins. If they are not the same (all High or all Low) it enters one of the possible SPI modes.

The reader always behaves as the *slave* while the microcontroller (MCU) behaves as the *master* device. The MCU initiates all communications with the reader and is also used to communicate with the higher levels (application layer). The reader has an IRQ pin to prompt the MCU for attention if the reader detects a response from the proximity/vicinity integrated circuit card (PICC/VICC).

Communication is initialized by a start condition, which is expected to be followed by an Address/Command word (Adr/Cmd). The Adr/Cmd word is 8 bits long, and its format is shown in Table 5-31.

Table 5-30. Pin Assignment in Parallel and Serial Interface Connection or Direct Mode

Pin	Parallel	Parallel-Direct	SPI with SS	SPI without SS
DATA_CLK	DATA_CLK	DATA_CLK	DATA_CLK from master	DATA_CLK from master
I/O_7	A/D[7]		MOSI(1) = data-in (reader-in)	MOSI(1) = data-in (reader-in)
I/O_6	A/D[6]	Direct mode, data out (sub-carrier or bit stream)	MISO(2) = data-out (MCU-out)	MISO(2) = data-out (MCU-out)
I/O_5(3)	A/D[5]	Direct mode, strobe – bit clock out	See Note 3	See Note 3
I/O_4	A/D[4]		SS – slave select(4)	—
I/O_3	A/D[3]	—	—	—
I/O_2	A/D[2]	—	at VDD	at VDD
I/O_1	A/D[1]	—	at VDD	at VSS
I/O_0	A/D[0]	—	at VSS	at VSS
IRQ	IRQ interrupt	IRQ interrupt	IRQ interrupt	IRQ interrupt

(1) MOSI – master out, slave in
(2) MISO – master in, slave out
(3) IO_5 pin is used only for information when data is put out of the chip (for example, reading 1 byte from the chip). It is necessary first to write in the address of the register (8 clocks) and then to generate another 8 clocks for reading out the data. The IO_5 pin goes high in this second 8 clocks. But for normal SPI operation this pin IO_5 is not used.
(4) Slave-select pin active-low

Table 5-31. Address/Command Word Bit Distribution

Bit	Description	Bit Function	Address	Command
Bit 7	Command control bit	0 = address, 1 = command	0	1
Bit 6	Read/Write	1 = read, 0 = write	R/W	0
Bit 5	Continuous address mode	1 = Cont. mode	R/W	0
Bit 4	Address/Command bit 4		Adr 4	Cmd 4
Bit 3	Address/Command bit 3		Adr 3	Cmd 3
Bit 2	Address/Command bit 2		Adr 2	Cmd 2
Bit 1	Address/Command bit 1		Adr 1	Cmd 1
Bit 0	Address/Command bit 0		Adr 0	Cmd 0

Copyright © 2006–2010, Texas Instruments Incorporated

The MSB (bit 7) determines if the word is to be used as a command or as an address. The last two columns of Table 5-31 show the function of the separate bits if either address or command is written. Data is expected once the address word is sent. In continuous-address mode (Cont. mode = 1), the first data that follows the address is written (or read) to (from) the given address. For each additional data, the address is incremented by one. Continuous mode can be used to write to a block of control registers in a single stream without changing the address; for example, setup of the predefined standard control registers from the MCU's non-volatile memory to the reader. In non-continuous address mode (simple addressed mode), only one data word is expected after the address.

Address mode is used to write or read the configuration registers or the FIFO. When writing more than 12 bytes to the FIFO, the *continuous address mode* should be set to 1.

The *command mode* is used to enter a command resulting in reader action (initialize transmission, enable reader, and turn reader On/Off...)

An example of expected communication between MCU and reader is shown below.

Continuous address mode

Start	Adr x	Data(x)	Data(x+1)	Data(x+2)	Data(x+3)	Data(x+4)	...	Data(x+n)	StopCont

Non-continuous address mode (single address mode)

Start	Adr x	Data(x)	Adr y	Data(y)	...	Adr z	Data(z)	StopSgl

Command mode

Start	Cmd x	(Optional data or command)	Stop

5.6 Parallel Interface Communication

In parallel mode, the start condition is generated on the rising edge of the I/O_7 pin while the CLK is high. This is used to reset the interface logic. Figure 5-5 shows the sequence of the data, with an 8-bit address word first, followed by data.

Communication is ended by:

- the StopSmpl condition, where the falling edge on the I/O_7 pin is expected while CLK is high
- the StopCont condition, where the I/O_7 pin must have a successive rising and falling edge while CLK is low in order to reset the parallel interface and be ready for the new communication sequence

The *StopSmpl* condition is also used to terminate the direct mode.

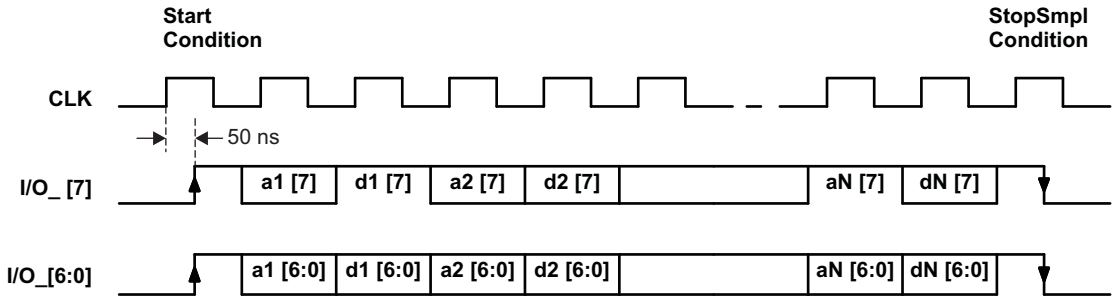

Figure 5-5. Parallel Interface Communication With Simple Stop Condition *StopSmpl*

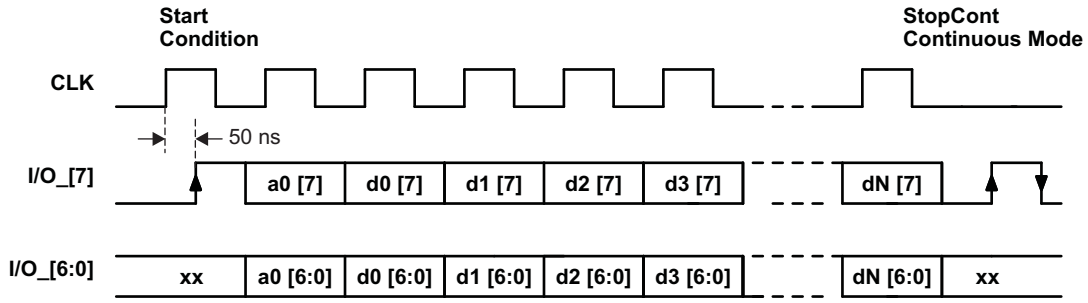

Figure 5-6. Parallel Interface Communication With Continuous Stop Condition *StopCont*

Copyright © 2006–2010, Texas Instruments Incorporated

5.6.1 Receive

At the start of a receive operation (when SOF is successfully detected), B6 is set in the *IRQ status* register. An interrupt request is sent to the MCU at the end of the receive operation if the receive data string was shorter than or equal to 8 bytes. The MCU receives the interrupt request, then checks to determine the reason for the interrupt by reading the *IRQ status* register (address 0Ch), after which the MCU reads the data from the FIFO.

If the received packet is longer than 8 bytes, the interrupt is sent before the end of the receive operation when the ninth byte is loaded into the FIFO (75% full). The MCU should again read the content of the *IRQ status* register to determine the cause of the interrupt request. If the FIFO is 75% full (as marked with flag B5 in *IRQ status* register and by reading the *FIFO status* register), the MCU should respond by reading the data from FIFO to make room for new incoming receive data. When the receive operation is finished, the interrupt is sent and the MCU must check how many words are still present in the FIFO before it finishes reading.

If the reader detects a receive error, the corresponding error flag is set (framing error, CRC error) in the *IRQ status* register, which indicates that the MCU reception was completed incorrectly.

5.6.2 Transmit

Before beginning data transmission, the FIFO should be cleared with a reset command (0F). Data transmission is initiated with a selected command (described in the *Direct Commands* section, Table 5-29). The MCU then commands the reader to do a continuous write command (3Dh, see Table 5-31) starting from register 1Dh. Data written into register 1Dh is the *TX length byte1* (upper and middle nibbles), while the following byte in register 1Eh is the *TX length byte 2* (lower nibble and broken byte length). Note that the TX byte length determines when the reader sends the EOF byte. After the *TX length bytes* are written, FIFO data is loaded in register 1Fh with byte storage locations 0 to 11. Data transmission begins automatically after the first byte is written into the FIFO. The loading of *TX length bytes* and the FIFO can be done with a continuous-write command, as the addresses are sequential.

At the start of transmission, the flag B7 (Irq_tx) is set in the *IRQ status* register. If the transmit data is shorter than or equal to 4 bytes, the interrupt is sent only at the end of the transmit operation. If the number of bytes to be transmitted is higher or equal to 5, then the interrupt is generated. This occurs also when the number of bytes in the FIFO reaches 3. The MCU should check the *IRQ status* register and *FIFO status* register and then load additional data to the FIFO, if needed. At the end of the transmit operation, an interrupt is sent to inform the MCU that the task is complete.

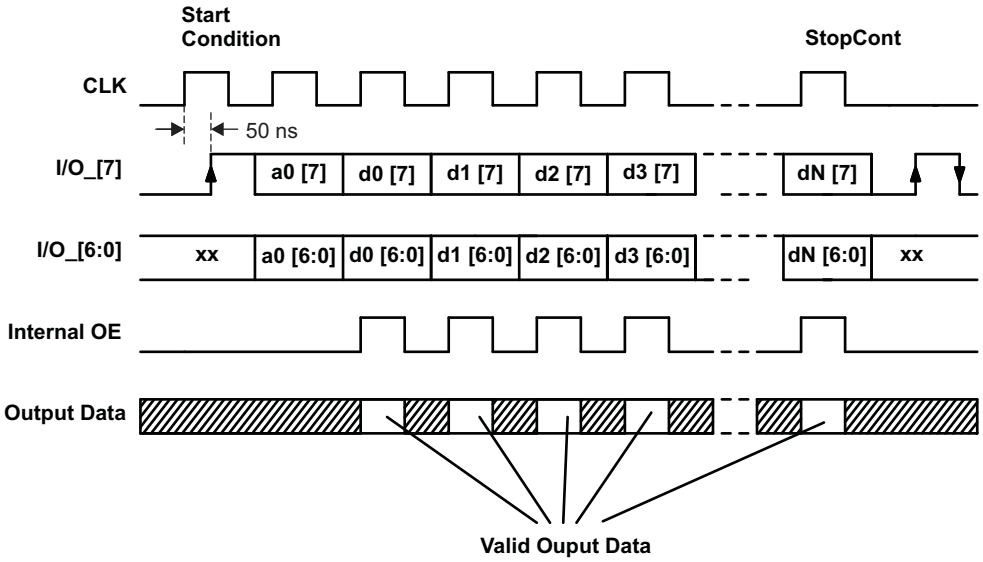

Figure 5-7. Data Output Only When CLK Is High

5.7 Serial Interface Communication

When an SPI interface is required, parallel I/O pins, I/O_2, I/O_1, and I/O_0, must be hard wired according to Table 5-31. On power up, the reader looks for the status of these pins; if they are not the same (not all high, or not all low), the reader enters into one of two possible SPI modes.

The serial communications work in the same manner as the parallel communications with respect to the FIFO, except for the following condition. On receiving an IRQ from the reader, the MCU reads the reader's IRQ register to determine how to service the reader. After this, the MCU must to do a dummy read to clear the reader's IRQ status register. The dummy read is required in SPI mode because the reader's IRQ status register needs an additional clock cycle to clear the register. This is not required in parallel mode because the additional clock cycle is included in the Stop condition.

A procedure for a dummy read is as follows:

A. Starting the dummy read:
   (a) When using slave select (SS): set SS bit low.
   (b) When not using SS: start condition is when SCLK is high (See Table 5-30).
B. Send address word to IRQ status register (0Ch) with read and continuous address mode bits set to 1 (See Table 5-31).
C. Read 1 byte (8 bits) from IRQ status register (0Ch).
D. Dummy-read 1 byte from register 0Dh (collision position and interrupt mask).
E. Stopping the dummy read:
   (a) When using slave select (SS): set SS bit high.
   (b) When not using SS: stop condition when SCLK is high (See Table 5-30).

5.7.1 SPI Interface Without SS* (Slave Select) Pin

The serial interface without the slave select pin must use delimiters for the start and stop conditions. Between these delimiters, the address, data, and command words can be transferred. All words must be 8 bits long with MSB transmitted first.

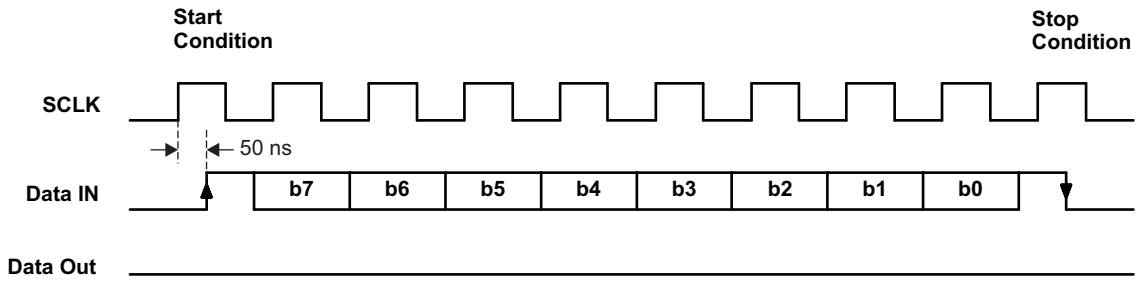

Figure 5-8. Serial – SPI Interface Communication (No SS* Pin)

In this mode, a rising edge on data-in (I/O_7, pin 24) while SCLK is high resets the serial interface and prepares it to receive data. Data-in can change only when SCLK is low and is taken by the reader on the SCLK rising edge. Communication is terminated by the stop condition when the data-in falling edge occurs during a high SCLK period.

5.7.2 SPI Interface With SS* (Slave Select) Pin

The serial interface is in reset while the SS* signal is high. Serial data-in (MOSI) changes on the falling edge, and is validated in the reader on the rising edge, as shown in Figure 5-9. Communication is terminated when the SS* signal goes high.

All words must be 8 bits long with the MSB transmitted first.

Copyright © 2006–2010, Texas Instruments Incorporated

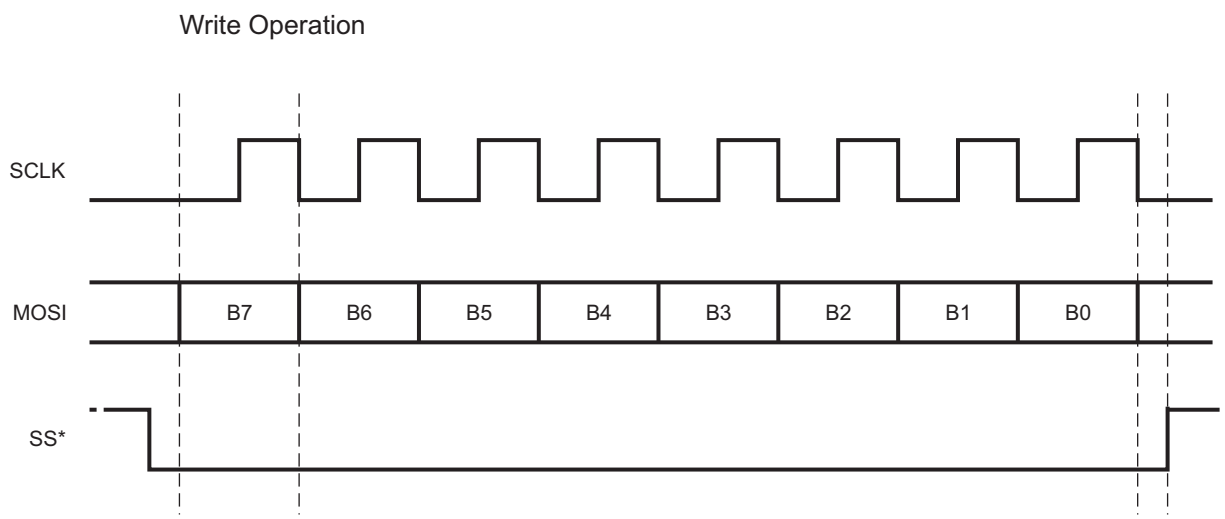

Figure 5-9. Serial–SPI Interface Communication (Write Mode)

The SPI read operation is shown in Figure 5-10.

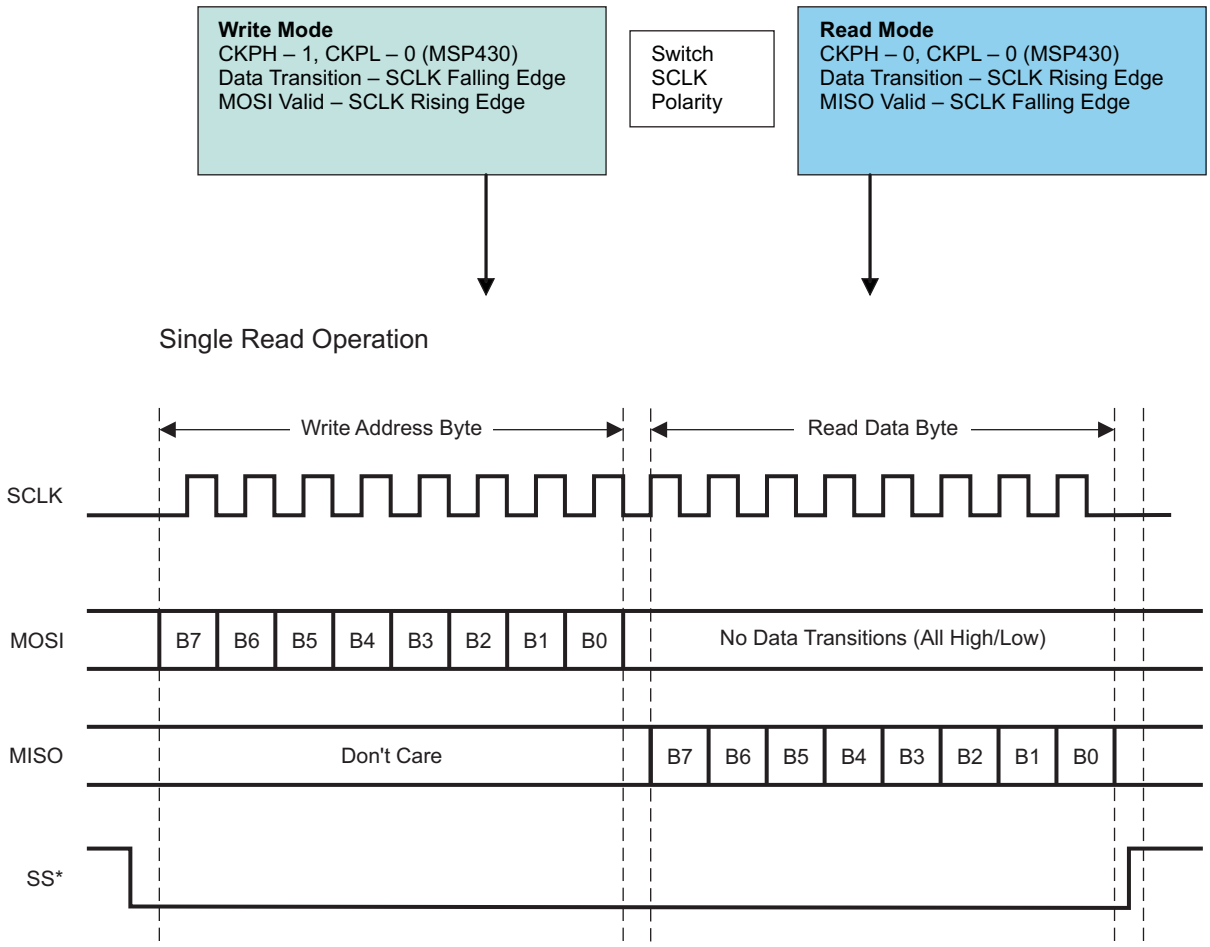

Figure 5-10. Serial – SPI Interface Communication (Read Mode)

The read command is sent out on the MOSI pin, MSB first, in the first eight clock cycles. MOSI data changes on the falling edge, and is validated in the reader on the rising edge, as shown in Figure 5-10. During the write cycle, the serial data out (MISO) is not valid. After the last read command bit (B0) is validated at the eighth rising edge of SCLK, after half a clock cycle, valid data can be read on the MISO pin at the falling edge of SCLK. It takes eight clock edges to read out the full byte (MSB first).

Note:

When using the hardware SPI (for example, an MSP430 hardware SPI) to implement the foregoing feature, care must be taken to switch the SCLK polarity after write phase for proper read operation. The example clock polarity for the MSP430-specific environment is shown in the write-mode and read-mode boxes of Figure 5-10. See the USART-SPI chapter for any specific microcontroller family for further information on the setting the appropriate clock polarity.

This clock polarity switch must be done for all read (single, continuous) operations.

The MOSI (serial data out) should not have any transitions (all high or all low) during the read cycle. Also, the SS* should be low during the whole write and read operation.

The continuous read operation is illustrated in Figure 5-11

 Copyright © 2006–2010, Texas Instruments Incorporated

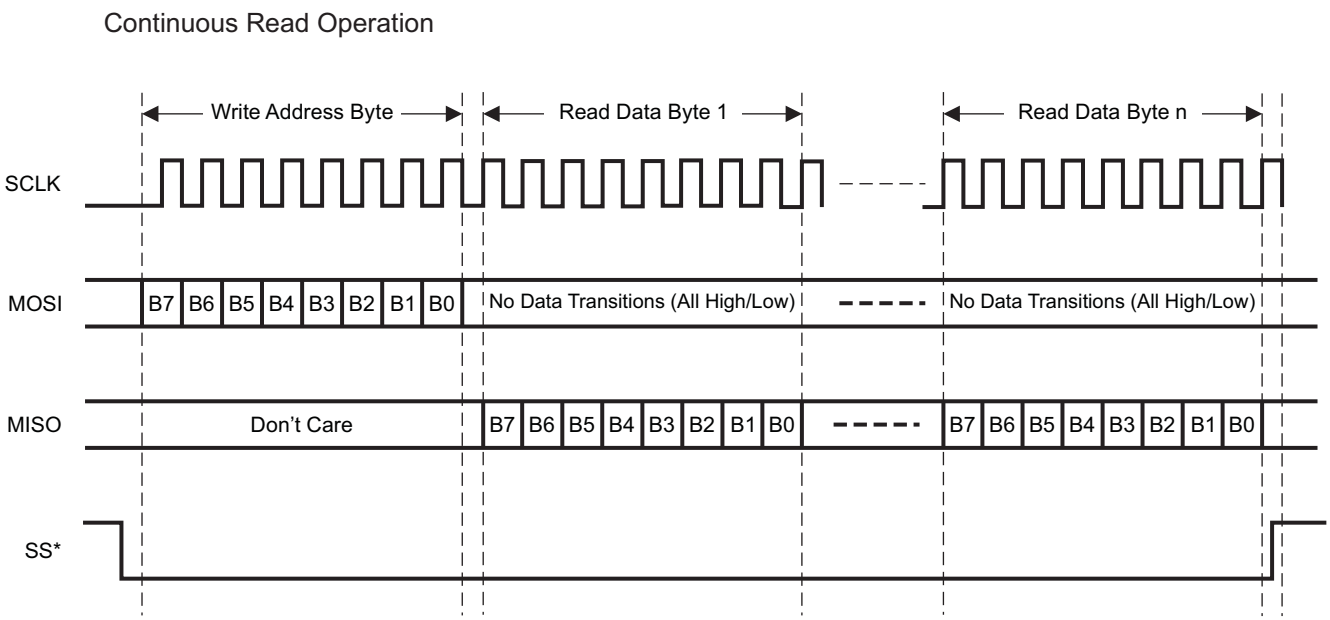

Figure 5-11. SPI Interface Communication (Continuous Read Mode)

Note:

Special steps are needed to read the TRF796x *IRQ status* register (register address 0x0C) in SPI mode. The status of the bits in this register is cleared after a dummy read. The following steps must be followed when reading the "IRQ status register".

1. Write in command 0x6C: read 'IRQ status' register in continuous mode (eight clocks).
2. Read out the data in register 0x0C (eight clocks).
3. Generate another eight clocks (as if reading the data in register 0x0D) but ignore the MISO data line.

This is shown in Figure 5-12.

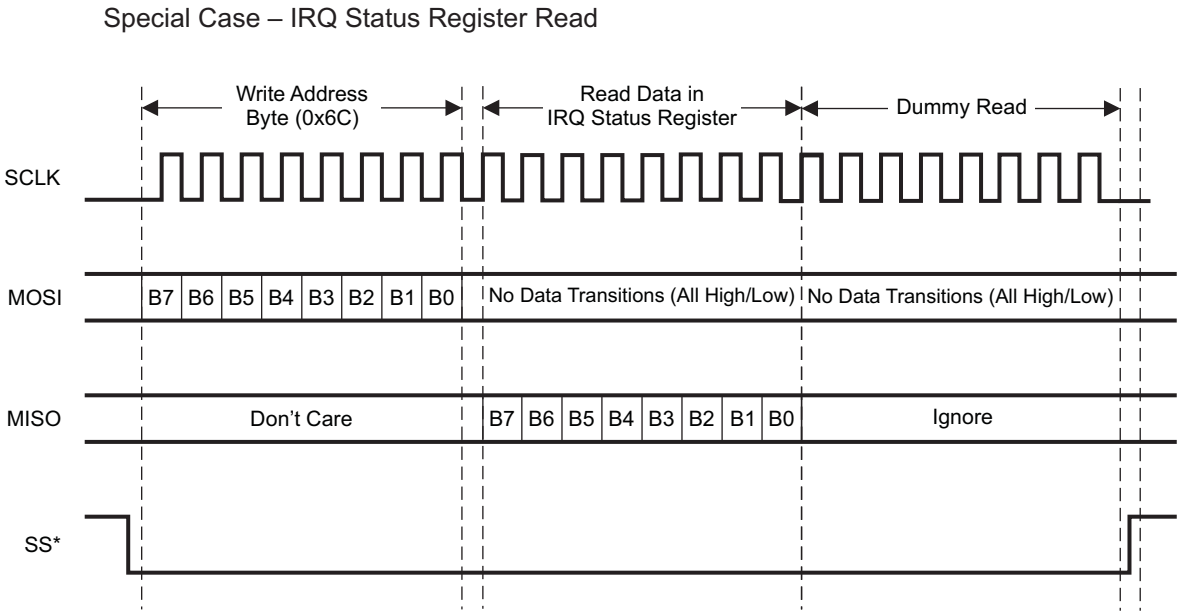

Figure 5-12. SPI Interface Communication (IRQ Status Register Read)

5.7.2.1 FIFO Operation

The FIFO is a 12-byte register at address 1Fh with byte storage locations 0 to 11. FIFO data is loaded in a cyclical manner and can be cleared by a reset command (0F).

Associated with the FIFO are two counters and three FIFO status flags. The first counter is a 4-bit FIFO byte counter (bits B0–B3 in register 1Ch) that keeps track of the number of bytes loaded into the FIFO. If the number of bytes in the FIFO is n, the register value is n – 1 (number of bytes in FIFO register). If 8 bytes are in the FIFO, the FIFO counter (bits B0–B3 in register 1Ch) has the value 7.

A second counter (12 bits wide) indicates the number of bytes being transmitted (registers 1Dh and 1Eh) in a data frame. An extension to the transmission-byte counter is a 4-bit broken-byte counter also provided in register 1Eh (bits B0-B3). Together these counters make up the TX length value that determines when the reader generates the EOF byte.

FIFO status flags are as follows:

1. **FIFO overflow** (bit B4 of register 1Ch) – indicates that the FIFO was loaded too soon
2. **FIFO level too low** (bit B5 of register 1Ch) – indicates that only three bytes are left to be transmitted (Can be used during transmission)
3. **FIFO level high** (bit B6 of register 1Ch) – indicates that nine bytes are already loaded into the FIFO (Can be used during reception to generate a FIFO reception IRQ. This is to notify the MCU to service the reader in time to ensure a continuous data stream.)

During transmission, the FIFO is checked for an almost-empty condition, and during reception for an almost-full condition. The maximum number of bytes that can be loaded into the FIFO in a single sequence is 12 bytes. (Note: The number of bytes in a frame, transmitted or received, can be greater than 12 bytes.)

During transmission, the MCU loads the reader's FIFO (or during reception the MCU removes data from the FIFO), and the FIFO counter counts the number of bytes being loaded into the FIFO. Meanwhile, the byte counter keeps track of the number of bytes being transmitted. An interrupt request is generated if the number of bytes in the FIFO is less than 3 or greater than 9, so that MCU can send new data or remove the data as necessary. The MCU also checks the number of data bytes to be sent, so as to not surpass the value defined in *TX length bytes*. The MCU also signals the transmit logic when the last byte of data is sent or was removed from the FIFO during reception. Transmission starts automatically after the first byte is written into FIFO.

5.8 External Power Amplifier Application

Applications requiring an extended read range can use an external power amplifier together with the TRF7960/61. This can be implemented by adding an external power amplifier on the transmit side and external sub-carrier detectors on the receive side.

To implement the external power amplification feature, certain registers must be programmed as shown below.

1. Set bit B6 of the Regulator and I/O Control register to 1 (see Table 5-21).

   This setting has two functions, first to provide a modulated signal for the transmitter if needed, and second to configure the TRF7960/61 receiver inputs for an external demodulated sub-carrier input.

2. Set bit B3 of the modulation and SYS_CLK control register to 1 (see Table 5-19).

   This function configures the ASK / OOK pin for either a digital or analog output (B3 = 0 enables a digital output, B3 = 1 enables an analog output).

Copyright © 2006–2010, Texas Instruments Incorporated

PACKAGING INFORMATION

Orderable Device	Status [1]	Package Type	Package Drawing	Pins	Package Qty	Eco Plan [2]	Lead/ Ball Finish	MSL Peak Temp [3]	Samples (Requires Login)
TRF7960RHBR	ACTIVE	QFN	RHB	32	3000	Green (RoHS & no Sb/Br)	CU NIPDAU	Level-2-260C-1 YEAR	
TRF7960RHBT	ACTIVE	QFN	RHB	32	250	Green (RoHS & no Sb/Br)	CU NIPDAU	Level-2-260C-1 YEAR	
TRF7961RHBR	ACTIVE	QFN	RHB	32	3000	Green (RoHS & no Sb/Br)	CU NIPDAU	Level-2-260C-1 YEAR	
TRF7961RHBT	ACTIVE	QFN	RHB	32	250	Green (RoHS & no Sb/Br)	CU NIPDAU	Level-2-260C-1 YEAR	

[1] The marketing status values are defined as follows:
ACTIVE: Product device recommended for new designs.
LIFEBUY: TI has announced that the device will be discontinued, and a lifetime-buy period is in effect.
NRND: Not recommended for new designs. Device is in production to support existing customers, but TI does not recommend using this part in a new design.
PREVIEW: Device has been announced but is not in production. Samples may or may not be available.
OBSOLETE: TI has discontinued the production of the device.

[2] Eco Plan - The planned eco-friendly classification: Pb-Free (RoHS), Pb-Free (RoHS Exempt), or Green (RoHS & no Sb/Br) - please check http://www.ti.com/productcontent for the latest availability information and additional product content details.
TBD: The Pb-Free/Green conversion plan has not been defined.
Pb-Free (RoHS): TI's terms "Lead-Free" or "Pb-Free" mean semiconductor products that are compatible with the current RoHS requirements for all 6 substances, including the requirement that lead not exceed 0.1% by weight in homogeneous materials. Where designed to be soldered at high temperatures, TI Pb-Free products are suitable for use in specified lead-free processes.
Pb-Free (RoHS Exempt): This component has a RoHS exemption for either 1) lead-based flip-chip solder bumps used between the die and package, or 2) lead-based die adhesive used between the die and leadframe. The component is otherwise considered Pb-Free (RoHS compatible) as defined above.
Green (RoHS & no Sb/Br): TI defines "Green" to mean Pb-Free (RoHS compatible), and free of Bromine (Br) and Antimony (Sb) based flame retardants (Br or Sb do not exceed 0.1% by weight in homogeneous material)

[3] MSL, Peak Temp. -- The Moisture Sensitivity Level rating according to the JEDEC industry standard classifications, and peak solder temperature.

Important Information and Disclaimer: The information provided on this page represents TI's knowledge and belief as of the date that it is provided. TI bases its knowledge and belief on information provided by third parties, and makes no representation or warranty as to the accuracy of such information. Efforts are underway to better integrate information from third parties. TI has taken and continues to take reasonable steps to provide representative and accurate information but may not have conducted destructive testing or chemical analysis on incoming materials and chemicals. TI and TI suppliers consider certain information to be proprietary, and thus CAS numbers and other limited information may not be available for release.

In no event shall TI's liability arising out of such information exceed the total purchase price of the TI part(s) at issue in this document sold by TI to Customer on an annual basis.

TAPE AND REEL INFORMATION

REEL DIMENSIONS

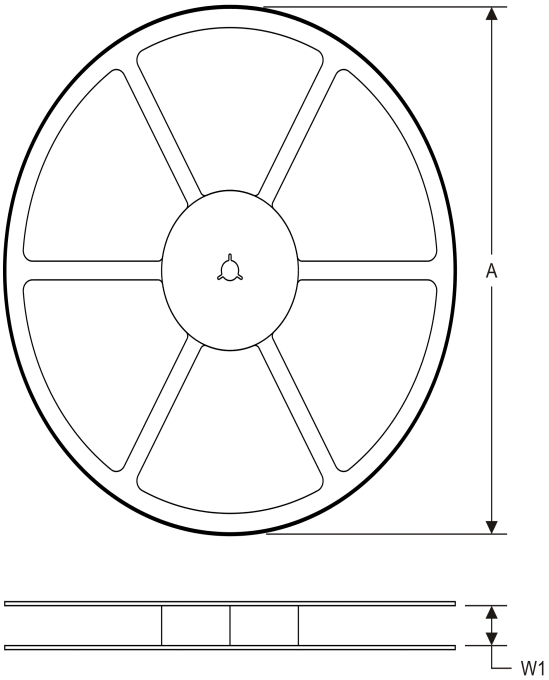

TAPE DIMENSIONS

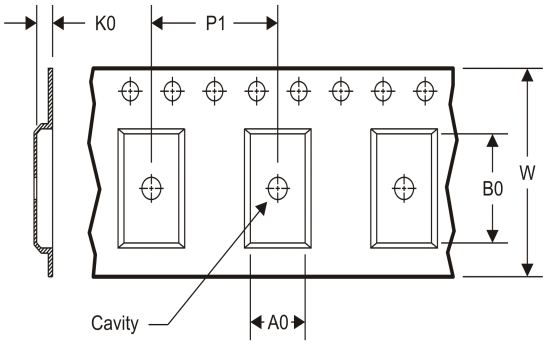

A0	Dimension designed to accommodate the component width
B0	Dimension designed to accommodate the component length
K0	Dimension designed to accommodate the component thickness
W	Overall width of the carrier tape
P1	Pitch between successive cavity centers

TAPE AND REEL INFORMATION

*All dimensions are nominal

Device	Package Type	Package Drawing	Pins	SPQ	Reel Diameter (mm)	Reel Width W1 (mm)	A0 (mm)	B0 (mm)	K0 (mm)	P1 (mm)	W (mm)	Pin1 Quadrant
TRF7960RHBR	QFN	RHB	32	3000	330.0	12.4	5.3	5.3	1.5	8.0	12.0	Q2
TRF7960RHBT	QFN	RHB	32	250	180.0	12.4	5.3	5.3	1.5	8.0	12.0	Q2
TRF7961RHBR	QFN	RHB	32	3000	330.0	12.4	5.3	5.3	1.5	8.0	12.0	Q2
TRF7961RHBT	QFN	RHB	32	250	180.0	12.4	5.3	5.3	1.5	8.0	12.0	Q2

TAPE AND REEL BOX DIMENSIONS

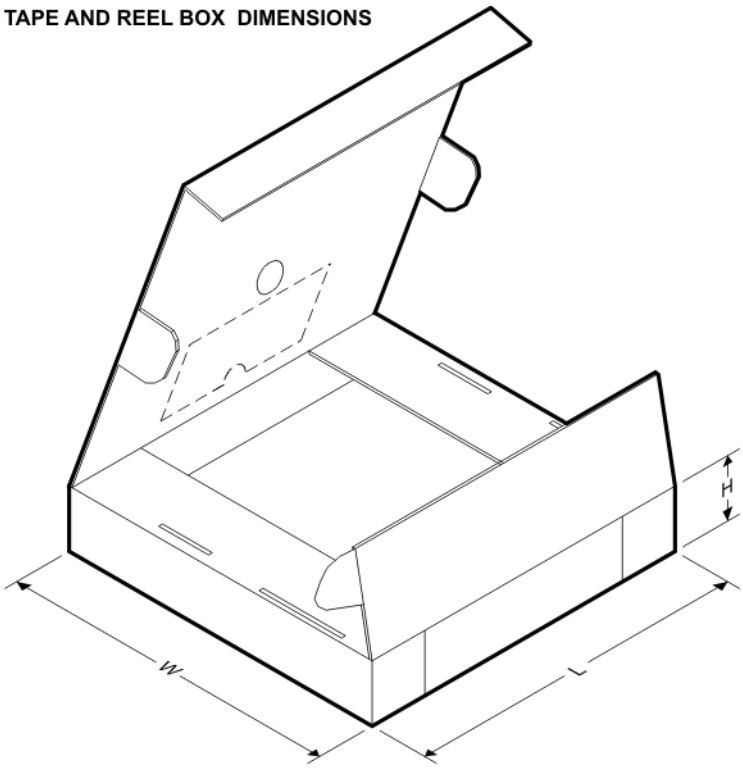

*All dimensions are nominal

Device	Package Type	Package Drawing	Pins	SPQ	Length (mm)	Width (mm)	Height (mm)
TRF7960RHBR	QFN	RHB	32	3000	367.0	367.0	35.0
TRF7960RHBT	QFN	RHB	32	250	210.0	185.0	35.0
TRF7961RHBR	QFN	RHB	32	3000	367.0	367.0	35.0
TRF7961RHBT	QFN	RHB	32	250	210.0	185.0	35.0

RHB (S–PVQFN–N32) PLASTIC QUAD FLATPACK NO–LEAD

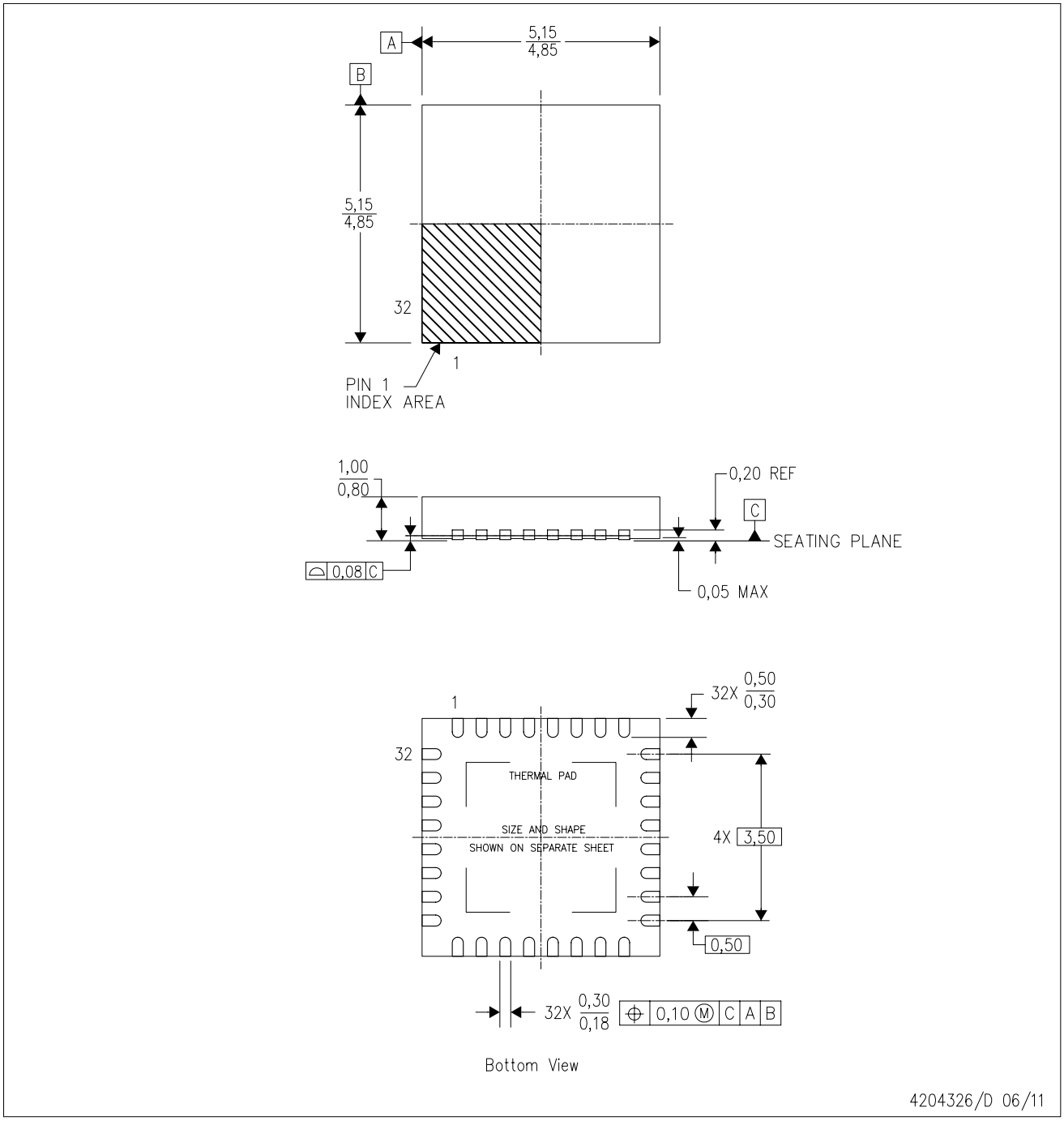

NOTES:
A. All linear dimensions are in millimeters. Dimensioning and tolerancing per ASME Y14.5M–1994.
B. This drawing is subject to change without notice.
C. QFN (Quad Flatpack No–Lead) Package configuration.
D. The package thermal pad must be soldered to the board for thermal and mechanical performance.
E. See the additional figure in the Product Data Sheet for details regarding the exposed thermal pad features and dimensions.
F. Falls within JEDEC MO–220.

RHB (S–PVQFN–N32) PLASTIC QUAD FLATPACK NO–LEAD

THERMAL INFORMATION

This package incorporates an exposed thermal pad that is designed to be attached directly to an external heatsink. The thermal pad must be soldered directly to the printed circuit board (PCB). After soldering, the PCB can be used as a heatsink. In addition, through the use of thermal vias, the thermal pad can be attached directly to the appropriate copper plane shown in the electrical schematic for the device, or alternatively, can be attached to a special heatsink structure designed into the PCB. This design optimizes the heat transfer from the integrated circuit (IC).

For information on the Quad Flatpack No–Lead (QFN) package and its advantages, refer to Application Report, QFN/SON PCB Attachment, Texas Instruments Literature No. SLUA271. This document is available at www.ti.com.

The exposed thermal pad dimensions for this package are shown in the following illustration.

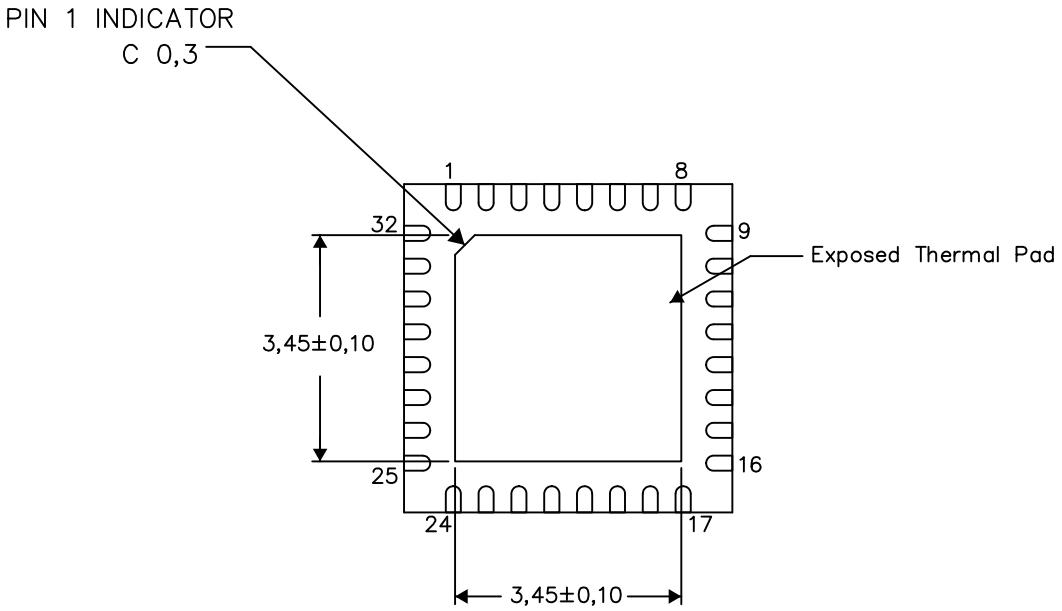

Bottom View

Exposed Thermal Pad Dimensions

4206356–2/W 09/12

NOTE: A. All linear dimensions are in millimeters

RHB (S–PVQFN–N32) PLASTIC QUAD FLATPACK NO–LEAD

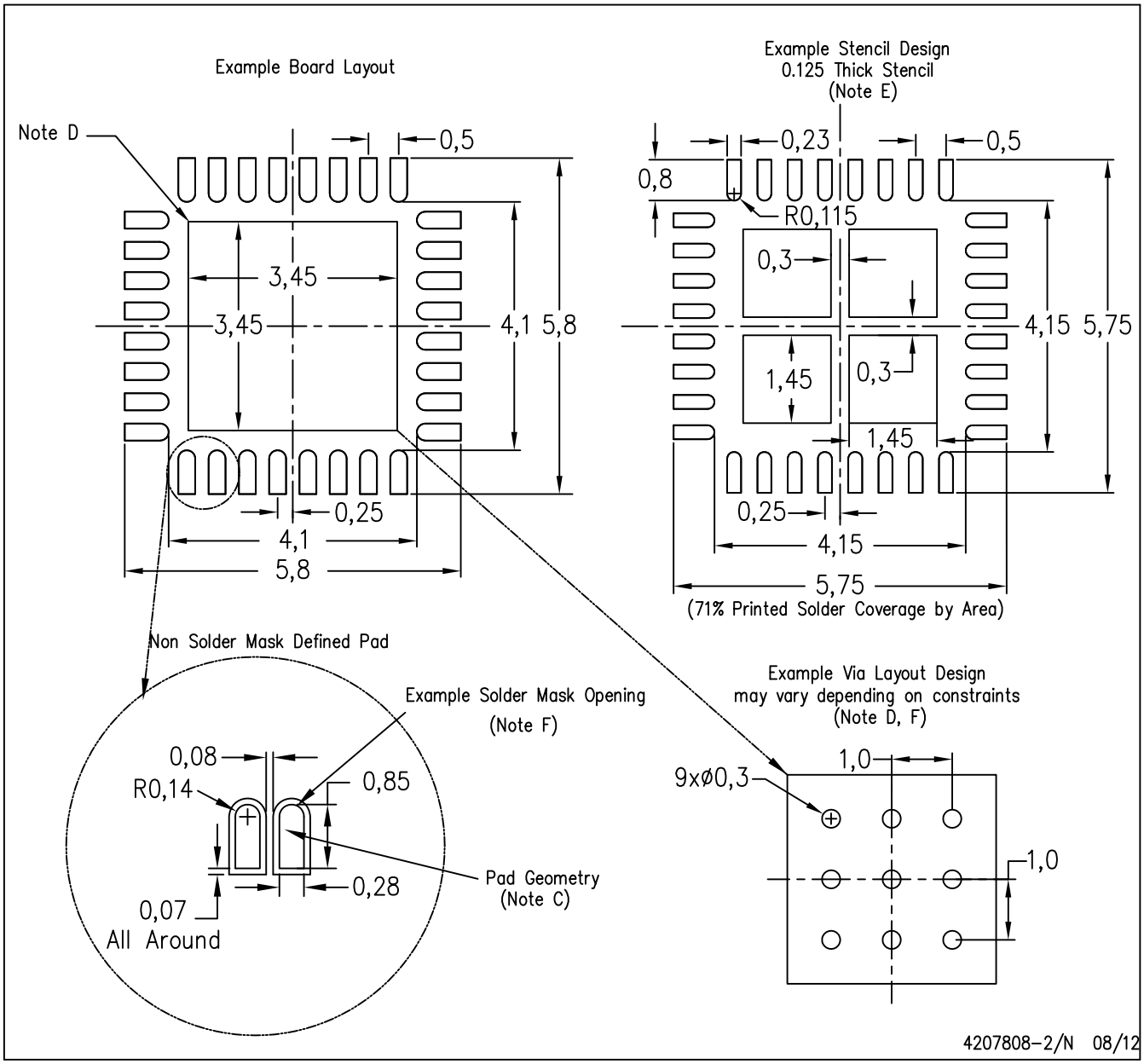

NOTES:
- A. All linear dimensions are in millimeters.
- B. This drawing is subject to change without notice.
- C. Publication IPC–7351 is recommended for alternate designs.
- D. This package is designed to be soldered to a thermal pad on the board. Refer to Application Note, Quad Flat–Pack Packages, Texas Instruments Literature No. SLUA271, and also the Product Data Sheets for specific thermal information, via requirements, and recommended board layout. These documents are available at www.ti.com <http://www.ti.com>.
- E. Laser cutting apertures with trapezoidal walls and also rounding corners will offer better paste release. Customers should contact their board assembly site for stencil design recommendations. Refer to IPC 7525 for stencil design considerations.
- F. Customers should contact their board fabrication site for recommended solder mask tolerances and via tenting recommendations for vias placed in the thermal pad.

IMPORTANT NOTICE

Texas Instruments Incorporated and its subsidiaries (TI) reserve the right to make corrections, enhancements, improvements and other changes to its semiconductor products and services per JESD46, latest issue, and to discontinue any product or service per JESD48, latest issue. Buyers should obtain the latest relevant information before placing orders and should verify that such information is current and complete. All semiconductor products (also referred to herein as “components”) are sold subject to TI’s terms and conditions of sale supplied at the time of order acknowledgment.

TI warrants performance of its components to the specifications applicable at the time of sale, in accordance with the warranty in TI’s terms and conditions of sale of semiconductor products. Testing and other quality control techniques are used to the extent TI deems necessary to support this warranty. Except where mandated by applicable law, testing of all parameters of each component is not necessarily performed.

TI assumes no liability for applications assistance or the design of Buyers’ products. Buyers are responsible for their products and applications using TI components. To minimize the risks associated with Buyers’ products and applications, Buyers should provide adequate design and operating safeguards.

TI does not warrant or represent that any license, either express or implied, is granted under any patent right, copyright, mask work right, or other intellectual property right relating to any combination, machine, or process in which TI components or services are used. Information published by TI regarding third-party products or services does not constitute a license to use such products or services or a warranty or endorsement thereof. Use of such information may require a license from a third party under the patents or other intellectual property of the third party, or a license from TI under the patents or other intellectual property of TI.

Reproduction of significant portions of TI information in TI data books or data sheets is permissible only if reproduction is without alteration and is accompanied by all associated warranties, conditions, limitations, and notices. TI is not responsible or liable for such altered documentation. Information of third parties may be subject to additional restrictions.

Resale of TI components or services with statements different from or beyond the parameters stated by TI for that component or service voids all express and any implied warranties for the associated TI component or service and is an unfair and deceptive business practice. TI is not responsible or liable for any such statements.

Buyer acknowledges and agrees that it is solely responsible for compliance with all legal, regulatory and safety-related requirements concerning its products, and any use of TI components in its applications, notwithstanding any applications-related information or support that may be provided by TI. Buyer represents and agrees that it has all the necessary expertise to create and implement safeguards which anticipate dangerous consequences of failures, monitor failures and their consequences, lessen the likelihood of failures that might cause harm and take appropriate remedial actions. Buyer will fully indemnify TI and its representatives against any damages arising out of the use of any TI components in safety-critical applications.

In some cases, TI components may be promoted specifically to facilitate safety-related applications. With such components, TI’s goal is to help enable customers to design and create their own end-product solutions that meet applicable functional safety standards and requirements. Nonetheless, such components are subject to these terms.

No TI components are authorized for use in FDA Class III (or similar life-critical medical equipment) unless authorized officers of the parties have executed a special agreement specifically governing such use.

Only those TI components which TI has specifically designated as military grade or “enhanced plastic” are designed and intended for use in military/aerospace applications or environments. Buyer acknowledges and agrees that any military or aerospace use of TI components which have ***not*** been so designated is solely at the Buyer's risk, and that Buyer is solely responsible for compliance with all legal and regulatory requirements in connection with such use.

TI has specifically designated certain components which meet ISO/TS16949 requirements, mainly for automotive use. Components which have not been so designated are neither designed nor intended for automotive use; and TI will not be responsible for any failure of such components to meet such requirements.

Products		**Applications**	
Audio	www.ti.com/audio	Automotive and Transportation	www.ti.com/automotive
Amplifiers	amplifier.ti.com	Communications and Telecom	www.ti.com/communications
Data Converters	dataconverter.ti.com	Computers and Peripherals	www.ti.com/computers
DLP® Products	www.dlp.com	Consumer Electronics	www.ti.com/consumer-apps
DSP	dsp.ti.com	Energy and Lighting	www.ti.com/energy
Clocks and Timers	www.ti.com/clocks	Industrial	www.ti.com/industrial
Interface	interface.ti.com	Medical	www.ti.com/medical
Logic	logic.ti.com	Security	www.ti.com/security
Power Mgmt	power.ti.com	Space, Avionics and Defense	www.ti.com/space-avionics-defense
Microcontrollers	microcontroller.ti.com	Video and Imaging	www.ti.com/video
RFID	www.ti-rfid.com		
OMAP Applications Processors	www.ti.com/omap	**TI E2E Community**	e2e.ti.com
Wireless Connectivity	www.ti.com/wirelessconnectivity		

Mailing Address: Texas Instruments, Post Office Box 655303, Dallas, Texas 75265
Copyright © 2012, Texas Instruments Incorporated

OCEAN CHIPS
Океан Электроники
Поставка электронных компонентов

Компания «Океан Электроники» предлагает заключение долгосрочных отношений при поставках импортных электронных компонентов на взаимовыгодных условиях!

Наши преимущества:

- Поставка оригинальных импортных электронных компонентов напрямую с производств Америки, Европы и Азии, а так же с крупнейших складов мира;
- Широкая линейка поставок активных и пассивных импортных электронных компонентов (более 30 млн. наименований);
- Поставка сложных, дефицитных, либо снятых с производства позиций;
- Оперативные сроки поставки под заказ (от 5 рабочих дней);
- Экспресс доставка в любую точку России;
- Помощь Конструкторского Отдела и консультации квалифицированных инженеров;
- Техническая поддержка проекта, помощь в подборе аналогов, поставка прототипов;
- Поставка электронных компонентов под контролем ВП;
- Система менеджмента качества сертифицирована по Международному стандарту ISO 9001;
- При необходимости вся продукция военного и аэрокосмического назначения проходит испытания и сертификацию в лаборатории (по согласованию с заказчиком);
- Поставка специализированных компонентов военного и аэрокосмического уровня качества (Xilinx, Altera, Analog Devices, Intersil, Interpoint, Microsemi, Actel, Aeroflex, Peregrine, VPT, Syfer, Eurofarad, Texas Instruments, MS Kennedy, Miteq, Cobham, E2V, MA-COM, Hittite, Mini-Circuits, General Dynamics и др.);

Компания «Океан Электроники» является официальным дистрибьютором и эксклюзивным представителем в России одного из крупнейших производителей разъемов военного и аэрокосмического назначения **«JONHON»**, а так же официальным дистрибьютором и эксклюзивным представителем в России производителя высокотехнологичных и надежных решений для передачи СВЧ сигналов **«FORSTAR»**.

AVIC JONHON

«JONHON» (основан в 1970 г.)

Разъемы специального, военного и аэрокосмического назначения:

(Применяются в военной, авиационной, аэрокосмической, морской, железнодорожной, горно- и нефтедобывающей отраслях промышленности)

«FORSTAR» (основан в 1998 г.)

ВЧ соединители, коаксиальные кабели, кабельные сборки и микроволновые компоненты:

(Применяются в телекоммуникациях гражданского и специального назначения, в средствах связи, РЛС, а так же военной, авиационной и аэрокосмической отраслях промышленности).

FORSTAR®

Телефон: 8 (812) 309-75-97 (многоканальный)
Факс: 8 (812) 320-03-32
Электронная почта: ocean@oceanchips.ru
Web: http://oceanchips.ru/
Адрес: 198099, г. Санкт-Петербург, ул. Калинина, д. 2, корп. 4, лит. А