DATA SHEET

UBA2030T
Full bridge driver IC

Product specification
Supersedes data of 1999 Aug 10

2002 Sep 27

Philips
Semiconductors

PHILIPS

Full bridge driver IC UBA2030T

FEATURES

- Full bridge driver
- Integrated bootstrap diodes
- Integrated high voltage level shift function
- High voltage input (570 V maximum) for the internal supply
- Adjustable ‘dead time’
- Adjustable oscillator frequency
- High voltage level shifter for the bridge enable function
- Shut-down function.

APPLICATIONS

- The UBA2030T can drive the MOSFETs in any type of load configured as a full bridge
- The circuit is intended as a commutator for High Intensity Discharge (HID) lamps.

GENERAL DESCRIPTION

The UBA2030T is a high voltage integrated circuit fabricated using the BCD750 power logic process. The circuit is designed for driving the MOSFETs in a full bridge configuration. In addition, it features a shut-down function, an adjustable oscillator and a PMOS high voltage level shifter to control the bridge enable function. To guarantee an accurate 50% duty factor, the oscillator signal passes through a divider before being fed to the output drivers.

ORDERING INFORMATION

TYPE NUMBER	PACKAGE		
	NAME	DESCRIPTION	VERSION
UBA2030T	SO24	plastic small outline package; 24 leads; body width 7.5 mm	SOT137-1

QUICK REFERENCE DATA

SYMBOL	PARAMETER	CONDITIONS	MIN.	TYP.	MAX.	UNIT
High voltage						
V_{HV}	high voltage supply		0	–	570	V
Start-up; powered via pin HV						
I_{strtu}	start-up current		–	0.7	1.0	mA
$V_{th(oscstrt)}$	start oscillating threshold voltage	at f_{bridge} = 500 Hz; no load	14.0	15.5	17.0	V
$V_{th(oscstp)}$	stop oscillating threshold voltage		11.5	13.0	14.5	V
Output drivers						
$I_{o(source)}$	output source current	$V_{DD} = V_{FSL} = V_{FSR} = 15$ V; $V_{GHR} = V_{GHL} = V_{GLR} = V_{GLL} = 0$ V	140	190	240	mA
$I_{o(sink)}$	output sink current	$V_{DD} = V_{FSL} = V_{FSR} = 15$ V; $V_{GHR} = V_{GHL} = V_{GLR} = V_{GLL} = 15$ V	200	260	320	mA
Internal oscillator						
f_{bridge}	bridge oscillating frequency	EXO pin connected to SGND	50	–	50000	Hz
External oscillator						
$f_{osc(ext)}$	external oscillator frequency	RC pin connected to SGND; $f_{bridge} = \frac{f_{osc(ext)}}{2}$	100	–	100000	Hz
Dead time control						
t_{dead}	dead time control range	adjusted externally	0.4	–	4	µs
Bridge enable						
I_{IH}	HIGH-level input current	bridge enable active	100	–	700	µA
I_{IL}	LOW-level input current	bridge enable not active	0	–	20	µA
Shut-down						
V_{IH}	HIGH-level input voltage	shut-down active; $\left\lvert\frac{\Delta V_{SD}}{\Delta t}\right\rvert > 5$ V/ms	4.5	–	V_{DD}	V
V_{IL}	LOW-level input voltage	shut-down not active; $\left\lvert\frac{\Delta V_{SD}}{\Delta t}\right\rvert > 5$ V/ms	0	–	0.5	V

BLOCK DIAGRAM

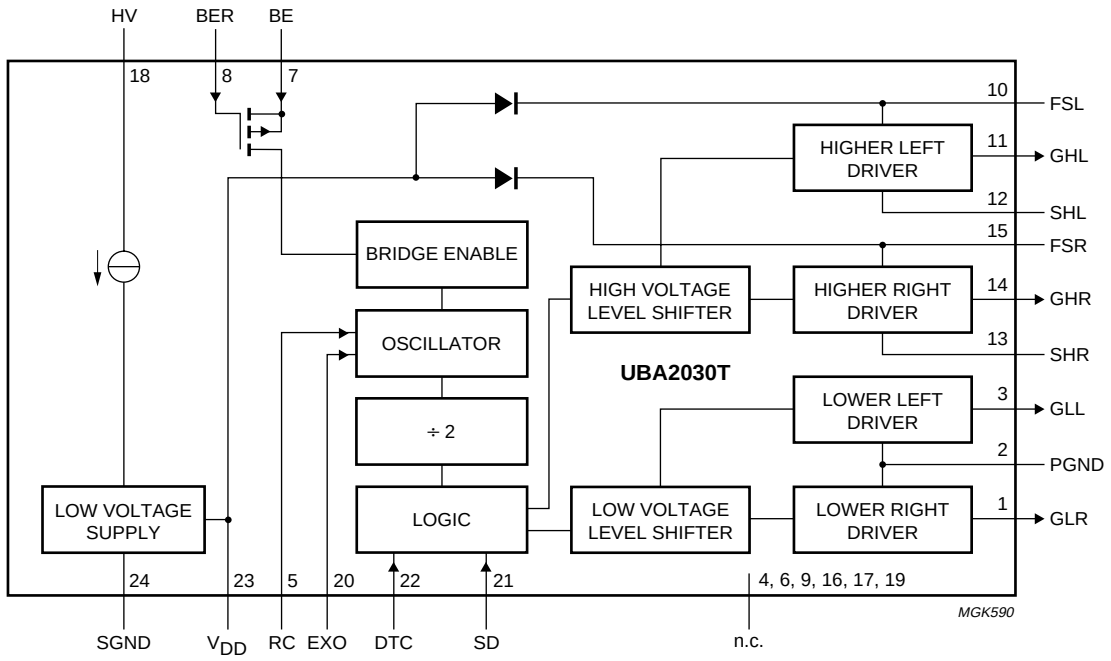

Fig.1 Block diagram.

PINNING

SYMBOL	PIN	DESCRIPTION
GLR	1	gate of lower right MOSFET
PGND	2	power ground for sources of lower left and right MOSFETs
GLL	3	gate of lower left MOSFET
n.c.	4	not connected
RC	5	RC input for internal oscillator
n.c.	6	not connected
BE	7	bridge enable control input
BER	8	bridge enable reference input
n.c.	9	not connected
FSL	10	floating supply voltage left side
GHL	11	gate of higher left MOSFET
SHL	12	source of higher left MOSFET
SHR	13	source of higher right MOSFET
GHR	14	gate of higher right MOSFET
FSR	15	floating supply voltage right side
n.c.	16	not connected
n.c.	17	not connected
HV	18	high voltage supply
n.c.	19	not connected
EXO	20	external oscillator input
SD	21	shut-down input
DTC	22	‘dead time’ control input
V_{DD}	23	internal (low voltage) supply
SGND	24	signal ground

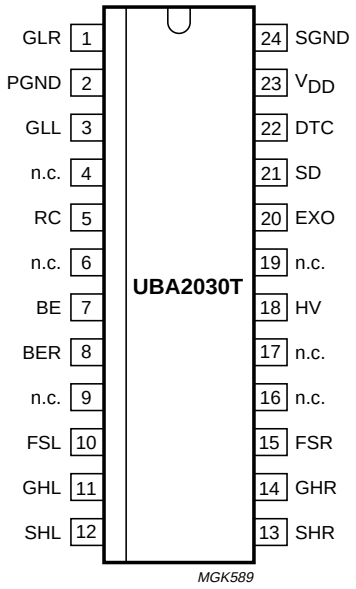

Fig.2 Pin configuration.

FUNCTIONAL DESCRIPTION

Supply voltage

The UBA2030T is powered by a single supply voltage connected to the HV pin (the full bridge supply could be used, for example). The IC generates its own low voltage supply for driving the internal circuitry and the MOSFETs in the full bridge, removing the need for an additional low voltage supply. A capacitor must be connected between the V_{DD} pin and SGND to obtain a ripple-free internal supply voltage.

Start-up

When the power is turned on, the UBA2030T enters a start-up phase; the high side MOSFETs are switched off and the low side MOSFETs switched on. During start-up, the bootstrap capacitors are charged and the bridge output current is zero.

Oscillation

At the point where the supply voltage at the HV pin crosses the ‘start oscillating threshold’, the bridge begins commutating between the following two defined states:

- Higher left and lower right MOSFETs on and higher right and lower left MOSFETs off
- Higher left and lower right MOSFETs off and higher right and lower left MOSFETs on.

When the internal oscillator is used, the bridge commutating frequency is determined by the values of an external resistor and capacitor. In this mode, the EXO pin must be connected to SGND.

When an external oscillator is used, its output must be connected to the EXO pin; the internal oscillator must be disabled by connecting the RC pin to SGND. The bridge commutating frequency is half the oscillator frequency due to a ÷2 circuit which guarantees an accurate 50% duty factor.

The time between turning off the conducting pair of MOSFETs and turning on the other pair, the ‘dead time’, can be adjusted using an external resistor. If the supply voltage at the HV pin falls below the ‘stop oscillating threshold’, the UBA2030T re-enters the start-up phase.

Bridge enable

The bridge enable function allows the bridge to be held in its current state. When active, it connects the RC pin to SGND, disabling the internal oscillator. If the bridge enable function is activated during ‘dead time’, the bridge is allowed to enter the next conducting state before being held. Oscillations resume the instant the bridge enable function is turned off. A timing diagram is shown in Fig.3.

To hold the bridge, an external control circuit is required to provide a source current to the bridge enable control input (pin BE), and to supply a reference voltage to pin BER (see Fig.6).

Shut-down

The active HIGH shut-down input (pin SD) can be used at any time to turn off all four MOSFETs. However, if the supply voltage drops below the ‘stop oscillating threshold’, the bridge re-enters the start-up phase even if the shut-down function is active.

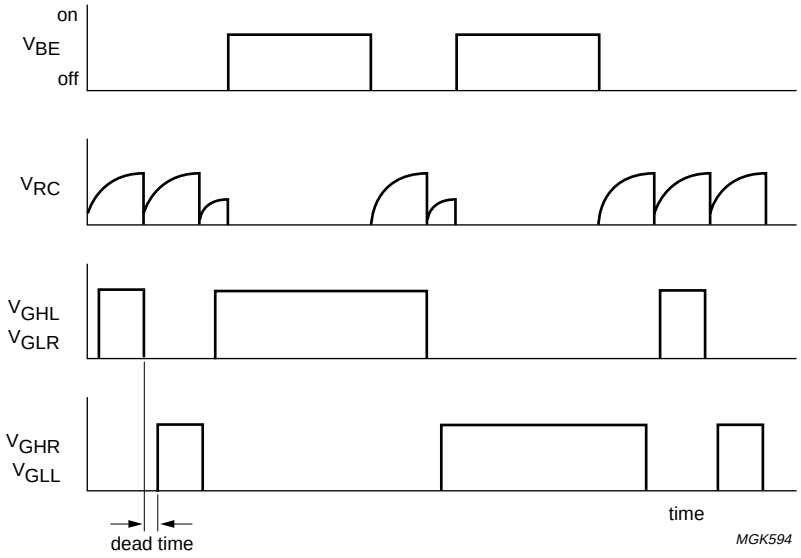

Fig.3 Timing diagram.

LIMITING VALUES

In accordance with the Absolute Maximum Rating System (IEC 60134).

SYMBOL	PARAMETER	CONDITIONS	MIN.	MAX.	UNIT
V_{DD}	supply voltage (low voltage)		0	18	V
V_{HV}	supply voltage (high voltage)	note 1	0	570	V
V_{FSL}, V_{FSR}	floating supply voltage	$V_{SHL} = V_{SHR} = 570$ V, note 1	570	588	V
		$V_{SHL} = V_{SHR} = 0$ V	0	18	V
V_{SHL}, V_{SHR}	source voltage for higher right and left MOSFETs	with reference to PGND and SGND	–10	+570	V
V_{PGND}	power ground voltage	with reference to SGND	–7	+10	V
$V_{i(BER)}$	bridge enable reference input voltage		0	570	V
$V_{i(BE)}$	bridge enable control input voltage	$V_{i(BER)} = 570$ V	570	580	V
		$V_{i(BER)} = 0$ V	0	10	V
$I_{i(BE)}$	bridge enable control input current		0	700	μA
$V_{i(EXO)}$	input voltage from external oscillator on pin EXO		0	V_{DD}	V
$V_{i(SD)}$	shut-down input voltage on pin SD		0	V_{DD}	V
SR	slew rate at output pins	repetitive	–4	+4	V/ns
T_j	junction temperature		–40	+150	°C
T_{amb}	ambient temperature		–40	+150	°C
T_{stg}	storage temperature		–55	+150	°C
V_{esd}	electrostatic discharge voltage	note 2			
	pin HV		–1250	+1250	V
	pins BE, BER, FSL, GHL, SHL, SHR, GHR and FSR		–1500	+1500	V

Notes

1. This value is guaranteed down to $T_j = -25$ °C. From $T_j = -25$ to -40 °C, the voltage on pin HV is limited to 530 V and the floating supply voltage (V_{FSL}, V_{FSR}) is limited to a maximum value of 548 V.
2. In accordance with the human body model: equivalent to discharging a 100 pF capacitor through a 1.5 kΩ series resistor.

THERMAL CHARACTERISTICS

SYMBOL	PARAMETER	VALUE	UNIT
$R_{th(j-a)}$	thermal resistance from junction to ambient	70	K/W

QUALITY SPECIFICATION

In accordance with *"General Quality Specifications for Integrated Circuits SNW-FQ-611D"*.

CHARACTERISTICS

T_j = 25 °C; all voltages with respect to PGND; positive currents flow into the IC.

SYMBOL	PARAMETER	CONDITIONS	MIN.	TYP.	MAX.	UNIT
High voltage						
V_{HV}	high voltage supply		0	–	570	V
I_L	leakage current	with 570 V applied to pins BER, SHR and SHL	–	–	5	μA
$V_{PGND(float)}$, $V_{SGND(float)}$	floating ground voltage		0	–	5	V
Start-up, powered via the HV pin; note 1						
I_{strtu}	start-up current		–	0.7	1.0	mA
V_{strtu}	start-up voltage	high left and right MOSFETs off; low left and right MOSFETs on	–	6	–	V
$V_{th(oscstrt)}$	start oscillating threshold voltage	f_{bridge} = 500 Hz; no load	14.0	15.5	17.0	V
$V_{th(oscstp)}$	stop oscillating threshold voltage		11.5	13.0	14.5	V
V_{hys}	hysteresis voltage	between oscillation start and stop levels	2.0	2.5	3.0	V
I_{HV}	supply current	f_{bridge} = 500 Hz; no load; V_{HV} = 50 V	0.3	0.5	0.7	mA
V_{DD}	internal supply voltage (low voltage)	f_{bridge} = 500 Hz; no load; V_{HV} = 50 V	14.0	15.3	16.5	V
		f_{bridge} = 500 Hz; no load; at start oscillating threshold	10.5	11	11.5	V
		f_{bridge} = 500 Hz; no load; at stop oscillating threshold	8.0	8.5	9.0	V
Output drivers						
$V_{o(GHL)}$, $V_{o(GHR)}$	output voltage on pins GHL and GHR for gates of higher right and left MOSFETs	at power-up; no load; V_{HV} = 50 V; f_{bridge} = 500 Hz	13.2	14.5	16.5	V
$V_{o(GLL)}$, $V_{o(GLR)}$	output voltage on pins GLL and GLR for gates of lower right and left MOSFETs		14.0	15.3	16.5	V
Δt	time difference between diagonally placed output drivers		0	–	100	ns
$R_{on(HL)}$, $R_{on(HR)}$	higher MOSFETs on resistance	V_{FSR} = V_{FSL} = 15 V; I_{source} = 50 mA	33	39	46	Ω
$R_{off(HL)}$, $R_{off(HR)}$	higher MOSFETs off resistance	V_{FSR} = V_{FSL} = 15 V; I_{sink} = 50 mA	11	14	17	Ω
$R_{on(LL)}$, $R_{on(LR)}$	lower MOSFETs on resistance	V_{DD} = 15 V; I_{source} = 50 mA	33	39	46	Ω
$R_{off(LL)}$, $R_{off(LR)}$	lower MOSFETs off resistance	V_{DD} = 15 V; I_{sink} = 50 mA	11	14	17	Ω
V_{diode}	bootstrap diode voltage drop	I_{diode} = 1 mA	0.8	1.0	1.2	V

SYMBOL	PARAMETER	CONDITIONS	MIN.	TYP.	MAX.	UNIT
$I_{o(source)}$	output source current	$V_{DD} = V_{FSL} = V_{FSR} = 15$ V; $V_{GHR} = V_{GHL} = V_{GLR} = V_{GLL} = 0$ V	140	190	240	mA
$I_{o(sink)}$	output sink current	$V_{DD} = V_{FSL} = V_{FSR} = 15$ V; $V_{GHR} = V_{GHL} = V_{GLR} = V_{GLL} = 15$ V	200	260	320	mA
$I_{FSL(float)}$, $I_{FSR(float)}$	floating supply current	$V_{FSL} = V_{FSR} = 15$ V	–	15	–	μA
Internal oscillator; notes 2 and 3						
f_{bridge}	bridge oscillating frequency	EXO pin connected to SGND	50	–	50000	Hz
$\Delta f_{osc}/\Delta T$	oscillator frequency dependency with respect to temperature	fixed RC; $\Delta T = -40$ °C to +150 °C	0	–	10	%
$\Delta f_{osc}/\Delta V_{DD}$	oscillator frequency dependency with respect to V_{DD}	fixed RC; $\Delta V_{DD} = 12$ to 16 V	0	–	10	%
k_H	HIGH-level trip point	$V_{RCH} = k_H \times V_{DD}$	0.67	0.71	0.75	
k_L	LOW-level trip point	$V_{RCL} = k_L \times V_{DD}$	–	0.01	–	
k_{osc}	oscillator constant	$f_{bridge} = \frac{1}{k_{osc} \times R_{osc} \times C_{osc}}$	2.34	2.49	2.64	
External oscillator; note 2						
$f_{osc(ext)}$	external oscillator frequency	RC pin connected to SGND; $f_{bridge} = \frac{f_{osc(ext)}}{2}$	100	–	100000	Hz
V_{IH}	HIGH-level input voltage	$\left\lvert\frac{\Delta V_{EXO}}{\Delta t}\right\rvert > 5$ V/ms	4.5	–	V_{DD}	V
V_{IL}	LOW-level input voltage	$\left\lvert\frac{\Delta V_{EXO}}{\Delta t}\right\rvert > 5$ V/ms	0	–	0.5	V
$I_{i(EXO)}$	input current		0	–	50	μA
Dead time control; notes 2 and 4						
t_{dead}	dead time control range	adjusted externally	0.4	–	4	μs
k_{DT}	dead time variable		180	270	380	kΩ/μs
Bridge enable; notes 2 and 5						
I_{IH}	HIGH-level input current	bridge enable active	100	–	700	μA
		note 6	–	1.1	–	mA
I_{IL}	LOW-level input current	bridge enable not active	0	–	20	μA
$V_{BE} - V_{BER}$	threshold voltage:	$I_{IH} = 100$ μA				
	with reference to HV		2.1	2.6	3.0	V
	with reference to PGND		3.5	5.5	7.5	V

SYMBOL	PARAMETER	CONDITIONS	MIN.	TYP.	MAX.	UNIT
Shut-down; note 2						
V_{IH}	HIGH-level input voltage	shut-down active; $\left\lvert\frac{\Delta V_{SD}}{\Delta t}\right\rvert > 5$ V/ms	4.5	–	V_{DD}	V
V_{IL}	LOW-level input voltage	shut-down not active; $\left\lvert\frac{\Delta V_{SD}}{\Delta t}\right\rvert > 5$ V/ms	0	–	0.5	V
$I_{i(SD)}$	input current		0	–	50	μA

Notes

1. The current into pin HV is internally limited to 15 mA at T_j = 25 °C and to 10 mA at T_j = 150 °C.
2. V_{DD} = 15 V.
3. The internal ÷2 circuit requires the frequency of the internal or external oscillator to be twice the bridge frequency. When the internal oscillator is used, the bridge frequency can be adjusted using an external resistor and capacitor:

   $$f_{bridge} = \frac{1}{2.8 \times R_{osc} \times C_{osc}}$$

   where $R_{osc(min)}$ = 200 kΩ and $R_{osc(max)}$ = 2 MΩ with low leakage current.
4. The ‘dead time’ is adjusted using an external resistor (R_{DT}) connected between pins DTC and SGND. The value is calculated as: R_{DT} = 270 x t_{dead} – 70, where the units are kΩ for R_{DT} and μs for t_{dead}. The minimum value $R_{DT(min)}$ = 50 kΩ and the maximum value $R_{DT(max)}$ = 1 MΩ.
5. This function is disabled when using an external oscillator.
6. I_{IH} < 2.1 mA when the condition is $V_{BE} - V_{BER}$ = 5 V at T_j = 150 °C.

APPLICATION INFORMATION

Basic application

A basic full bridge configuration with an HID lamp is shown in Fig.4. The bridge enable and shut-down functions are not used in this application. The EXO, BE, BER and SD pins are connected to system ground. The IC is powered by the high voltage supply.

When the internal oscillator is used, the bridge commutating frequency is determined by the values of R_{osc} and C_{osc}. The bridge starts oscillating when the HV supply voltage exceeds the 'start oscillating threshold' (typically 15.5 V). If the supply voltage at the HV pin falls below the 'stop oscillating threshold' (typically 13 V), the UBA2030T enters the start-up state.

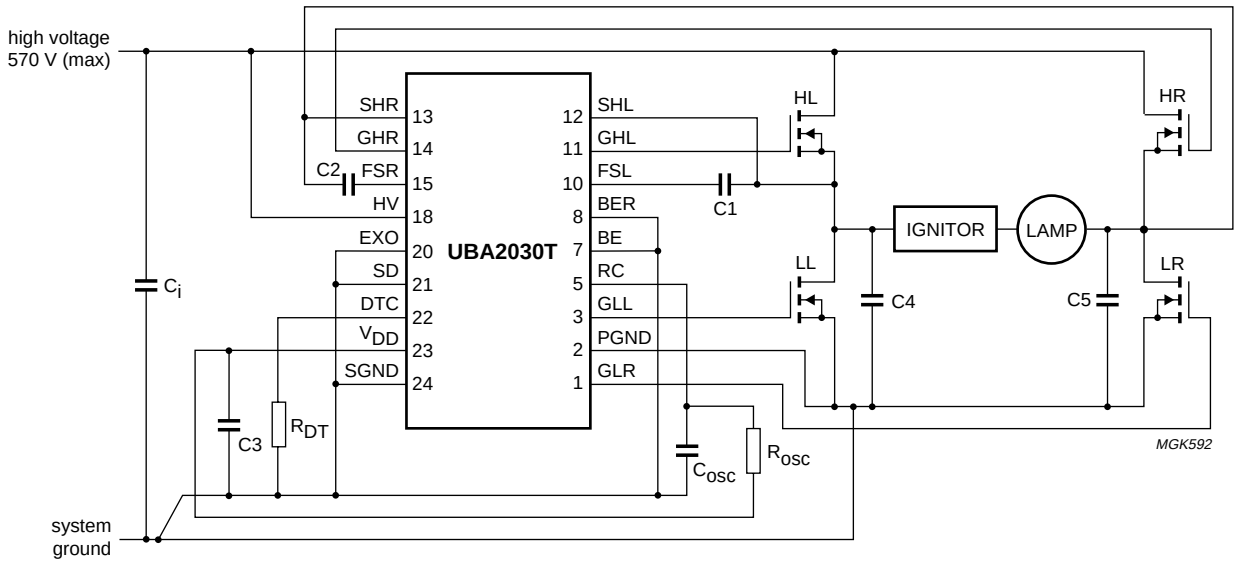

Fig.4 Basic configuration.

Application with external control

Figure 5 shows an application containing an external oscillator control circuit referenced to system ground. The RC, BER and BE pins are connected to system ground.

The bridge commutation frequency is determined by the external oscillator. The shut-down input (pin SD) can be used to quickly turn off all four MOSFETs in the full bridg

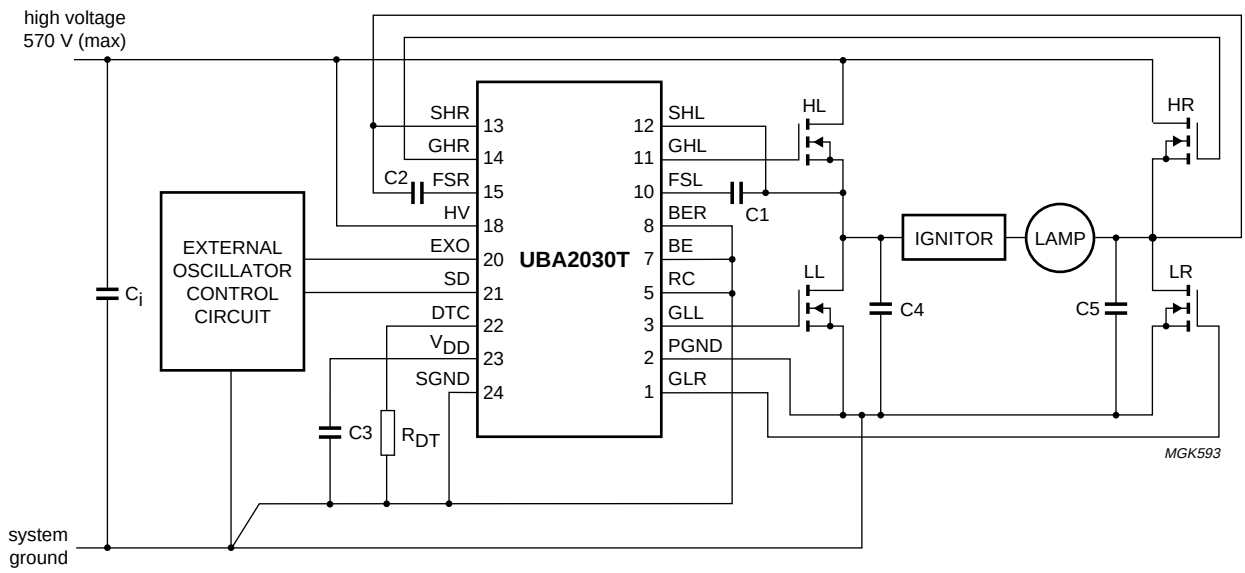

Fig.5 External control configuration.

Automotive application

The life of an HID lamp depends on the rate of sodium migration through its quartz wall. To minimize this, the lamp must be operated negative with respect to system ground.

Figure 6 shows a full bridge with an HID lamp in an automotive environment, and a control circuit referenced to the high side of the bridge. The BER and HV pins are connected to system ground. The bridge can be held in its current state using the BE pin. See the timing diagram in Fig.3.

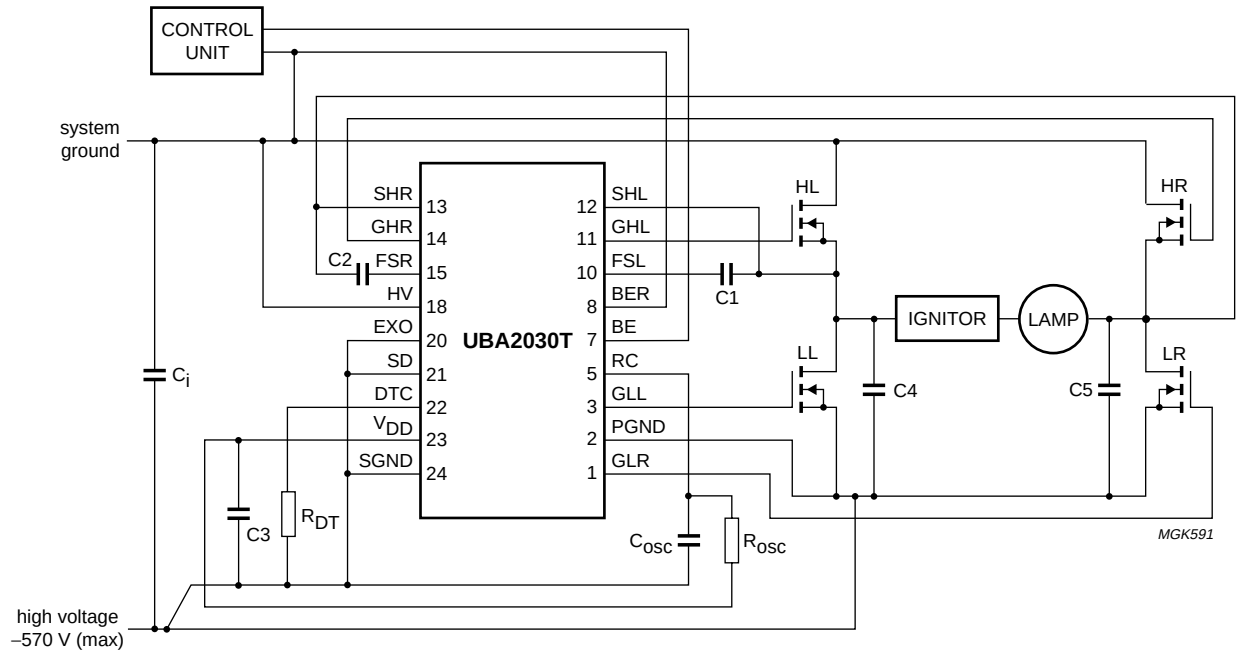

Fig.6 Automotive configuration (example 1).

Additional application information

The UBA2030T is the commutator part in a complete system for driving an HID lamp. The life of the HID lamp can depend on the amount of sodium that migrates through its quartz wall. To minimize this migration, the lamp must be operated negative with respect to system ground.

Figure 7 shows a full bridge with an HID lamp in a typical automotive configuration using a control unit referenced to the high side of the bridge. Pin BER is connected to system ground. The bridge can be held in its current state by pin BE. The supply current to the internal low voltage circuit is fed to pin HV which can be connected to either system ground or to a low voltage DC supply, such as a battery, as indicated by the dotted lines in Fig.7.

The diode in series with the supply to pin HV prevents C_i being discharged if the lamp is shorted during the ignition phase. C6 should be positioned as close as possible to pin DTC. The control unit drives the MOSFETs relatively hard which can cause radiation. To prevent switching the MOSFETs hard, a resistor can be connected in series with each gate.

In all applications, the voltage on pin HV must not be allowed to become lower than the voltage at pin V_{DD} during the start-up phase or during normal operation, otherwise the full bridge will not operate correctly. During the start-up phase, pin EXO and pin SD should both be LOW. The voltage as a function of time at pin EXO and pin SD should be >5 V/ms.

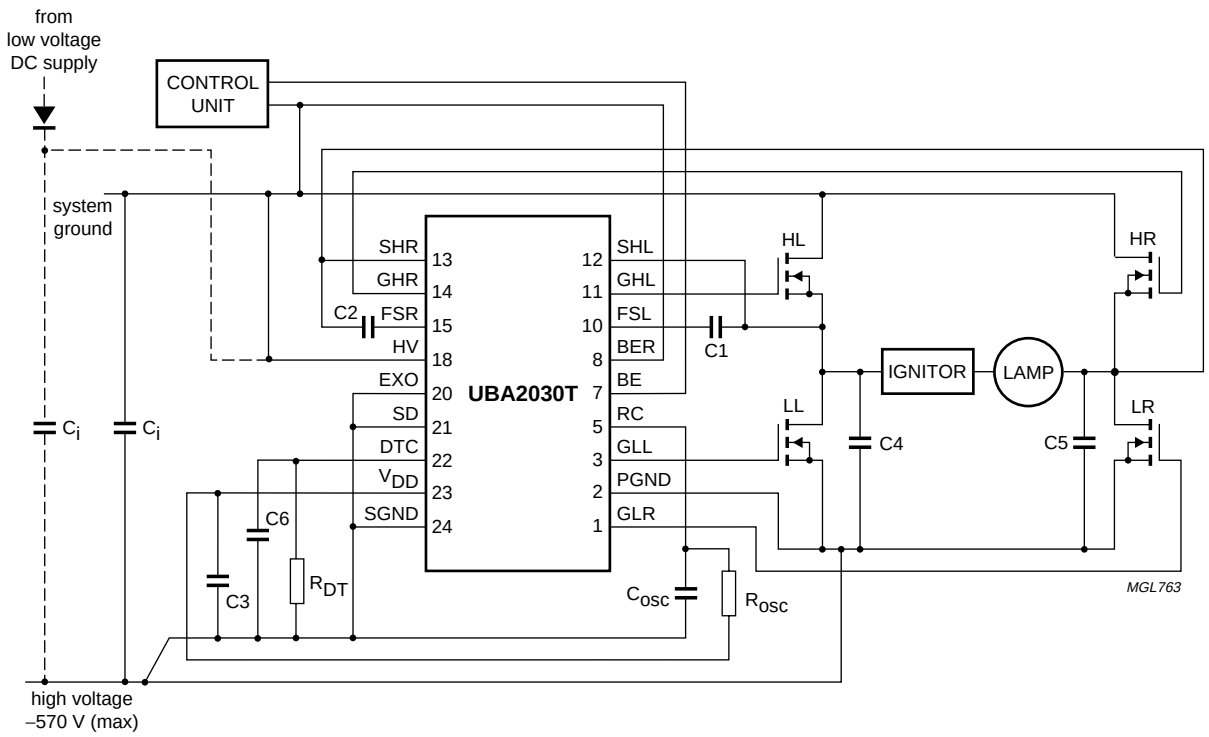

C1 = 150 nF.
C2 = 150 nF.
C3 = 220 nF.
C6 = 100 pF.
C_{osc} = 10 nF.
R_{osc} = 147 kΩ.
R_{DT} = 50 to 1000 kΩ (220 kΩ results in a 'dead time' of 1 μs).

Fig.7 Automotive configuration (example 2).

PACKAGE OUTLINE

SO24: plastic small outline package; 24 leads; body width 7.5 mm **SOT137-1**

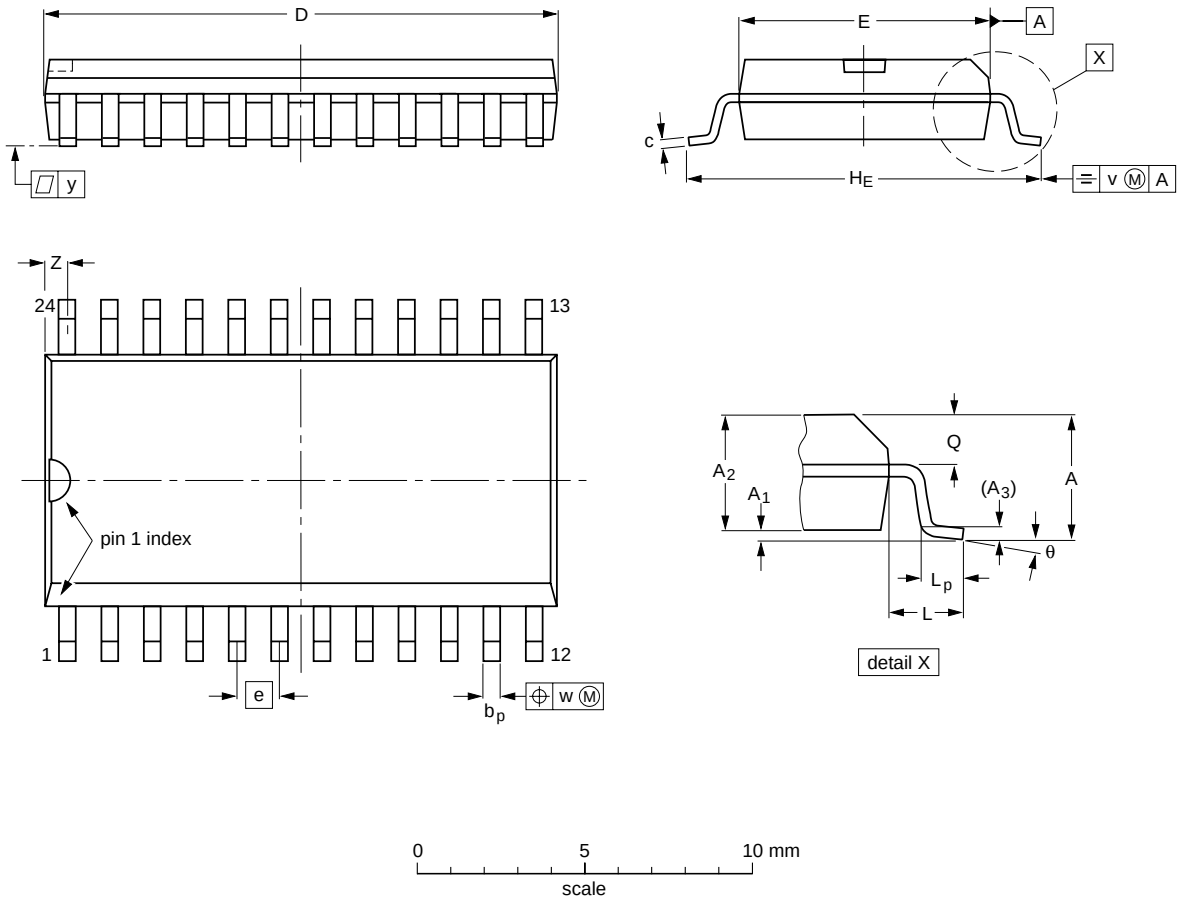

DIMENSIONS (inch dimensions are derived from the original mm dimensions)

UNIT	A max.	A_1	A_2	A_3	b_p	c	D (1)	E (1)	e	H_E	L	L_p	Q	v	w	y	Z (1)	θ
mm	2.65	0.30 0.10	2.45 2.25	0.25	0.49 0.36	0.32 0.23	15.6 15.2	7.6 7.4	1.27	10.65 10.00	1.4	1.1 0.4	1.1 1.0	0.25	0.25	0.1	0.9 0.4	8° 0°
inches	0.10	0.012 0.004	0.096 0.089	0.01	0.019 0.014	0.013 0.009	0.61 0.60	0.30 0.29	0.050	0.419 0.394	0.055	0.043 0.016	0.043 0.039	0.01	0.01	0.004	0.035 0.016	

Note

1. Plastic or metal protrusions of 0.15 mm maximum per side are not included.

OUTLINE VERSION	REFERENCES				EUROPEAN PROJECTION	ISSUE DATE
	IEC	JEDEC	EIAJ			
SOT137-1	075E05	MS-013				~~97-05-22~~ 99-12-27

SOLDERING

Introduction to soldering surface mount packages

This text gives a very brief insight to a complex technology. A more in-depth account of soldering ICs can be found in our *"Data Handbook IC26; Integrated Circuit Packages"* (document order number 9398 652 90011).

There is no soldering method that is ideal for all surface mount IC packages. Wave soldering can still be used for certain surface mount ICs, but it is not suitable for fine pitch SMDs. In these situations reflow soldering is recommended.

Reflow soldering

Reflow soldering requires solder paste (a suspension of fine solder particles, flux and binding agent) to be applied to the printed-circuit board by screen printing, stencilling or pressure-syringe dispensing before package placement.

Several methods exist for reflowing; for example, convection or convection/infrared heating in a conveyor type oven. Throughput times (preheating, soldering and cooling) vary between 100 and 200 seconds depending on heating method.

Typical reflow peak temperatures range from 215 to 250 °C. The top-surface temperature of the packages should preferable be kept below 220 °C for thick/large packages, and below 235 °C for small/thin packages.

Wave soldering

Conventional single wave soldering is not recommended for surface mount devices (SMDs) or printed-circuit boards with a high component density, as solder bridging and non-wetting can present major problems.

To overcome these problems the double-wave soldering method was specifically developed.

If wave soldering is used the following conditions must be observed for optimal results:

- Use a double-wave soldering method comprising a turbulent wave with high upward pressure followed by a smooth laminar wave.
- For packages with leads on two sides and a pitch (e):
  - larger than or equal to 1.27 mm, the footprint longitudinal axis is **preferred** to be parallel to the transport direction of the printed-circuit board;
  - smaller than 1.27 mm, the footprint longitudinal axis **must** be parallel to the transport direction of the printed-circuit board.

  The footprint must incorporate solder thieves at the downstream end.
- For packages with leads on four sides, the footprint must be placed at a 45° angle to the transport direction of the printed-circuit board. The footprint must incorporate solder thieves downstream and at the side corners.

During placement and before soldering, the package must be fixed with a droplet of adhesive. The adhesive can be applied by screen printing, pin transfer or syringe dispensing. The package can be soldered after the adhesive is cured.

Typical dwell time is 4 seconds at 250 °C.
A mildly-activated flux will eliminate the need for removal of corrosive residues in most applications.

Manual soldering

Fix the component by first soldering two diagonally-opposite end leads. Use a low voltage (24 V or less) soldering iron applied to the flat part of the lead. Contact time must be limited to 10 seconds at up to 300 °C.

When using a dedicated tool, all other leads can be soldered in one operation within 2 to 5 seconds between 270 and 320 °C.

Suitability of surface mount IC packages for wave and reflow soldering methods

PACKAGE[1]	SOLDERING METHOD	
	WAVE	REFLOW[2]
BGA, LBGA, LFBGA, SQFP, TFBGA, VFBGA	not suitable	suitable
HBCC, HBGA, HLQFP, HSQFP, HSOP, HTQFP, HTSSOP, HVQFN, HVSON, SMS	not suitable[3]	suitable
PLCC[4], SO, SOJ	suitable	suitable
LQFP, QFP, TQFP	not recommended[4][5]	suitable
SSOP, TSSOP, VSO	not recommended[6]	suitable

Notes

1. For more detailed information on the BGA packages refer to the *"(LF)BGA Application Note*" (AN01026); order a copy from your Philips Semiconductors sales office.
2. All surface mount (SMD) packages are moisture sensitive. Depending upon the moisture content, the maximum temperature (with respect to time) and body size of the package, there is a risk that internal or external package cracks may occur due to vaporization of the moisture in them (the so called popcorn effect). For details, refer to the Drypack information in the *"Data Handbook IC26; Integrated Circuit Packages; Section: Packing Methods"*.
3. These packages are not suitable for wave soldering. On versions with the heatsink on the bottom side, the solder cannot penetrate between the printed-circuit board and the heatsink. On versions with the heatsink on the top side, the solder might be deposited on the heatsink surface.
4. If wave soldering is considered, then the package must be placed at a 45° angle to the solder wave direction. The package footprint must incorporate solder thieves downstream and at the side corners.
5. Wave soldering is suitable for LQFP, TQFP and QFP packages with a pitch (e) larger than 0.8 mm; it is definitely not suitable for packages with a pitch (e) equal to or smaller than 0.65 mm.
6. Wave soldering is suitable for SSOP and TSSOP packages with a pitch (e) equal to or larger than 0.65 mm; it is definitely not suitable for packages with a pitch (e) equal to or smaller than 0.5 mm.

DATA SHEET STATUS

DATA SHEET STATUS(1)	PRODUCT STATUS(2)	DEFINITIONS
Objective data	Development	This data sheet contains data from the objective specification for product development. Philips Semiconductors reserves the right to change the specification in any manner without notice.
Preliminary data	Qualification	This data sheet contains data from the preliminary specification. Supplementary data will be published at a later date. Philips Semiconductors reserves the right to change the specification without notice, in order to improve the design and supply the best possible product.
Product data	Production	This data sheet contains data from the product specification. Philips Semiconductors reserves the right to make changes at any time in order to improve the design, manufacturing and supply. Changes will be communicated according to the Customer Product/Process Change Notification (CPCN) procedure SNW-SQ-650A.

Notes

1. Please consult the most recently issued data sheet before initiating or completing a design.
2. The product status of the device(s) described in this data sheet may have changed since this data sheet was published. The latest information is available on the Internet at URL http://www.semiconductors.philips.com.

DEFINITIONS

Short-form specification — The data in a short-form specification is extracted from a full data sheet with the same type number and title. For detailed information see the relevant data sheet or data handbook.

Limiting values definition — Limiting values given are in accordance with the Absolute Maximum Rating System (IEC 60134). Stress above one or more of the limiting values may cause permanent damage to the device. These are stress ratings only and operation of the device at these or at any other conditions above those given in the Characteristics sections of the specification is not implied. Exposure to limiting values for extended periods may affect device reliability.

Application information — Applications that are described herein for any of these products are for illustrative purposes only. Philips Semiconductors make no representation or warranty that such applications will be suitable for the specified use without further testing or modification.

DISCLAIMERS

Life support applications — These products are not designed for use in life support appliances, devices, or systems where malfunction of these products can reasonably be expected to result in personal injury. Philips Semiconductors customers using or selling these products for use in such applications do so at their own risk and agree to fully indemnify Philips Semiconductors for any damages resulting from such application.

Right to make changes — Philips Semiconductors reserves the right to make changes, without notice, in the products, including circuits, standard cells, and/or software, described or contained herein in order to improve design and/or performance. Philips Semiconductors assumes no responsibility or liability for the use of any of these products, conveys no licence or title under any patent, copyright, or mask work right to these products, and makes no representations or warranties that these products are free from patent, copyright, or mask work right infringement, unless otherwise specified.

Philips Semiconductors – a worldwide company

Contact information

For additional information please visit **http://www.semiconductors.philips.com**. Fax: **+31 40 27 24825**
For sales offices addresses send e-mail to: **sales.addresses@www.semiconductors.philips.com**.

© Koninklijke Philips Electronics N.V. 2002 SCA74

All rights are reserved. Reproduction in whole or in part is prohibited without the prior written consent of the copyright owner.

The information presented in this document does not form part of any quotation or contract, is believed to be accurate and reliable and may be changed without notice. No liability will be accepted by the publisher for any consequence of its use. Publication thereof does not convey nor imply any license under patent- or other industrial or intellectual property rights.

Printed in The Netherlands 613502/03/pp20 Date of release: 2002 Sep 27 Document order number: 9397 750 10256

Let's make things better.

Philips Semiconductors

PHILIPS

Mouser Electronics

Authorized Distributor

Click to View Pricing, Inventory, Delivery & Lifecycle Information:

NXP:
UBA2030T/N1/N,118

OCEAN CHIPS
Океан Электроники
Поставка электронных компонентов

Компания «Океан Электроники» предлагает заключение долгосрочных отношений при поставках импортных электронных компонентов на взаимовыгодных условиях!

Наши преимущества:

- Поставка оригинальных импортных электронных компонентов напрямую с производств Америки, Европы и Азии, а так же с крупнейших складов мира;
- Широкая линейка поставок активных и пассивных импортных электронных компонентов (более 30 млн. наименований);
- Поставка сложных, дефицитных, либо снятых с производства позиций;
- Оперативные сроки поставки под заказ (от 5 рабочих дней);
- Экспресс доставка в любую точку России;
- Помощь Конструкторского Отдела и консультации квалифицированных инженеров;
- Техническая поддержка проекта, помощь в подборе аналогов, поставка прототипов;
- Поставка электронных компонентов под контролем ВП;
- Система менеджмента качества сертифицирована по Международному стандарту ISO 9001;
- При необходимости вся продукция военного и аэрокосмического назначения проходит испытания и сертификацию в лаборатории (по согласованию с заказчиком);
- Поставка специализированных компонентов военного и аэрокосмического уровня качества (Xilinx, Altera, Analog Devices, Intersil, Interpoint, Microsemi, Actel, Aeroflex, Peregrine, VPT, Syfer, Eurofarad, Texas Instruments, MS Kennedy, Miteq, Cobham, E2V, MA-COM, Hittite, Mini-Circuits, General Dynamics и др.);

Компания «Океан Электроники» является официальным дистрибьютором и эксклюзивным представителем в России одного из крупнейших производителей разъемов военного и аэрокосмического назначения **«JONHON»**, а так же официальным дистрибьютором и эксклюзивным представителем в России производителя высокотехнологичных и надежных решений для передачи СВЧ сигналов **«FORSTAR»**.

AVIC JONHON

«JONHON» (основан в 1970 г.)

Разъемы специального, военного и аэрокосмического назначения:

(Применяются в военной, авиационной, аэрокосмической, морской, железнодорожной, горно- и нефтедобывающей отраслях промышленности)

«FORSTAR» (основан в 1998 г.)

ВЧ соединители, коаксиальные кабели, кабельные сборки и микроволновые компоненты:

(Применяются в телекоммуникациях гражданского и специального назначения, в средствах связи, РЛС, а так же военной, авиационной и аэрокосмической отраслях промышленности).

FORSTAR®

Телефон: 8 (812) 309-75-97 (многоканальный)
Факс: 8 (812) 320-03-32
Электронная почта: ocean@oceanchips.ru
Web: http://oceanchips.ru/
Адрес: 198099, г. Санкт-Петербург, ул. Калинина, д. 2, корп. 4, лит. А