Automotive / Appliance control

6 mm carbon trimmer potentiometer PT6

Mechanical specifications

Mechanical rotation angle		235° ± 5°
Electrical rotation angle		200° ± 20°
Torque	Rotational Stop	0.2 to 2 Ncm . (0.3 to 2.7 in - oz) > 4 Ncm.(>5.6 in-oz)
Life*		Up to 10K cycles

Electrical specifications

Range of values *		220Ω ≤ Rn ≤ 5MΩ (Decad. 1.0 - 2.0 - 2.2 - 2.5 - 4.7 - 5.0)
Tolerance *	220Ω ≤ Rn ≤ 1MΩ 1MΩ ≤ Rn ≤ 5MΩ	± 20% ± 30%
Max. voltage		100 VDC (lin) 50 VDC (no lin)
Nominal power 50°C (122°F) (see power rating curve)		0.1 W (lin) 0.05 W (no lin)
Taper *		Lin; Log; Alog (Log. & Alog. only Rn > 1K)
Residual resistance*		≤ 0.5% Rn (5Ω min.)
Equivalent noise resistance		≤ 3% Rn (3Ω min.)
Operating temperature **		-25°C to +70°C (-13°F to + 158°F)

* Others: check availability.
** Up to 85°C depending on application.

Main features

- Carbon resistive element.
- IP54 protection according to IEC 60529.
- Polyester substrate.
-SMD version available (see PS-6 datasheet).
-Wiper positioned at initial, 50% or fully clockwise.

- Also upon request:
  - Supplied in magazines for automatic insertion.
  - Long life model (10K cycles).
  - Housing available in self extinguishable plastic (UL94V0).
  - Mechanical detents.

Description

The PT-6 potentiometer offers control where frequent adjustment is required. The shaftless design allows for employment of different engagement mechanisms, such as a customized shaft, a motor control or a human interface adjustment.

This potentiometer can also control variable outputs including frequency, change in motor speed or volume.

Typical applications include test and measurement equipment, consumer electronics, appliances, timer relays, robotics, motion controllers, home and building automation and medical equipment control panels.

This datasheet shows you the basics of the PT-6 potentiometer that is quite versatile and easy to taylor. Do not hesitate to contact Piher for advice.

6 mm carbon trimmer potentiometer PT6

How to order

PT-6 K V - 221 A 2020 - [ ] [ ] [ ] - [ ] - [ ] [ ]

Optional extras

Series

Rotors
A
K
M
Q
W
X
(See note 1)

Mounting method
H = Horizontal adjust
V = Vertical adjust

Value
221 = 220Ω
505 = 5M
000 = CM
(See note 2)

Taper
A = Lin.
B = Log.
C = Alog.

Tolerance
3030 = ± 30%
2020 = ± 20%
1010 = ± 10%
0505 = ± 5%
(See note 3)

Life
- = 1K cycles
E= 10 K cycles
(See note 4)

Detents
- = None
P04
P05
P06
P07
P08
P10

Packaging
- = Bulk
T = Magazines
(See note 5)

Shaft/Knob
- - = Fig.1
02 = Fig. 2
03 = Fig. 3
04 = Fig. 4
05 = Fig. 5
(Use this option for rotors W or X only)

Knob/rotor colour
- = White
AM = Yellow
AZ = Blue
CR = Cream
GR = Grey
IN = Not coloured
NE = Black
RO = Red
VE = Green
(See note 6)

Wiper position
- = Initial
PM = 50%
PF = Final

Crimping
- = Crimped terminals
SC = Not crimped

NOTES:

(1) Adjust. type: «X» is only available with horizontal adjusting method.

(2) Value: – Code: 22 1 = 220 Ω
22 → First two digits.
1 → Number of zeros

– 000 = CM = switch SPDT version (contact us por further information)

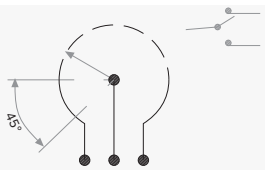

SPDT. function

Resistance Ω	100	200	220	250	470	500	1K	2K	2.2K	2.5K	4.7K	5K	10K	20K	22K	25K	47K	50K	100K	200K	220K	250K	470K	500K	1M	2M	2.5M	4.7M	5M
How to order code	101	201	221	251	471	501	102	202	222	252	472	502	103	203	223	253	473	503	104	204	224	254	474	504	105	205	255	475	505
Standard tolerance	30%		20%																							30%			

(3) Tolerance (non standard, custom): check availability..... Code eg.: +7 −5 = 07 05
07 → Positive tolerance
05 → Negative tolerance

(4) Life: • Standard = 1000 cycles • Long = 10K cycles (non-detented models)

(5) Only for "V" mounting method. "W" rotor with shaft Fig. 2 is not available in magazines .

(6) Potentiometer without knob or shaft, only the rotor. Potentiometer with knob or shaft, only the knob/shaft.
The default colour for the knob and rotor is white.

Online product configurator: https://piher.net/configurator/pt6-6-configurator-potentiometer/

How to order examples

PT6KH-103A2020

6mm potentiometer with rotor "K" (cross shape), H mounting method (horizontal adjustment), 10K resistive value, linear taper, 20% resistive tolerance and crimped terminals.

PT6WV-104A1010-5NE-SC

6mm potentiometer with factory pre-inserted knob, V mounting method (vertical adjustment), 100K resistive value, linear taper, 10% resistive tolerance, black knob ref. 6148 and straight terminals (not crimped).

Standard default options

Mechanical life	1000 cycles
Crimping	Yes
Packing	Bulk
Rotor colour	White
Wiper send position	Initial
Knob colour	White
Detents	None

6 mm carbon trimmer potentiometer PT6

Rotors

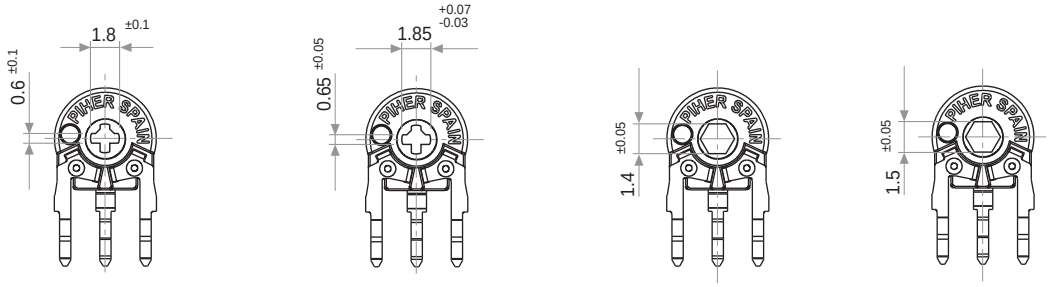

K
Cross slot thru hole

Q
Cross slot thru hole
colour: pink

M
Hexagonal thru hole

A
Cross slot thru hole
colour: pink

Default delivery is at initial position. Wipers are shown positioned at 50% for the picture.

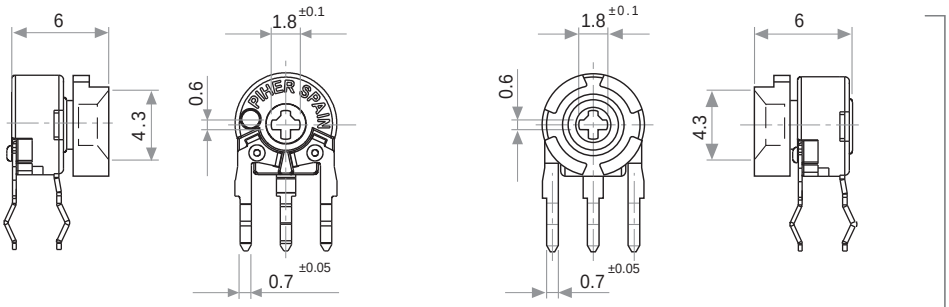

X = Adjustable from collector side

W = Adjustable from terminal side

With inserted knob / shaft.

Default knob is ref. 5155 white.

Mounting methods. Dimensions

V = horizontal mounting – vertical adjustment

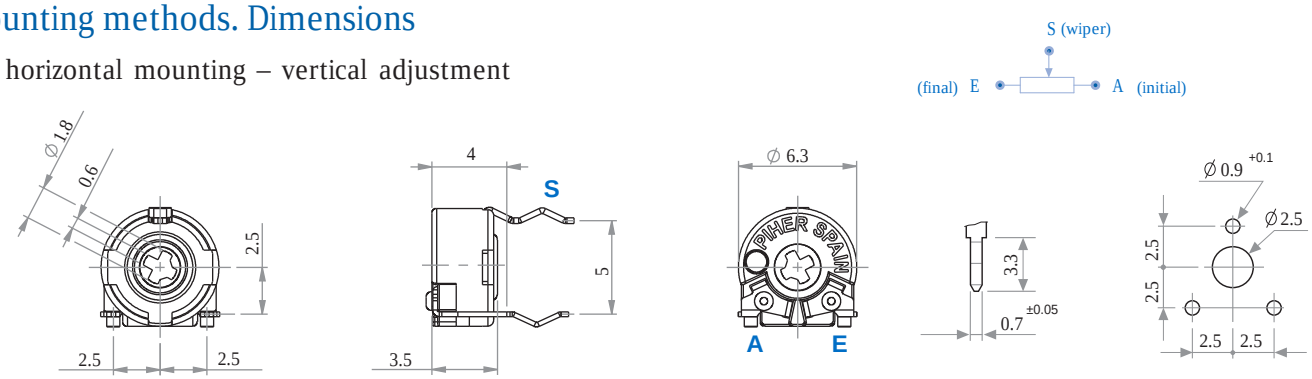

H = vertical mounting – horizontal adjustment

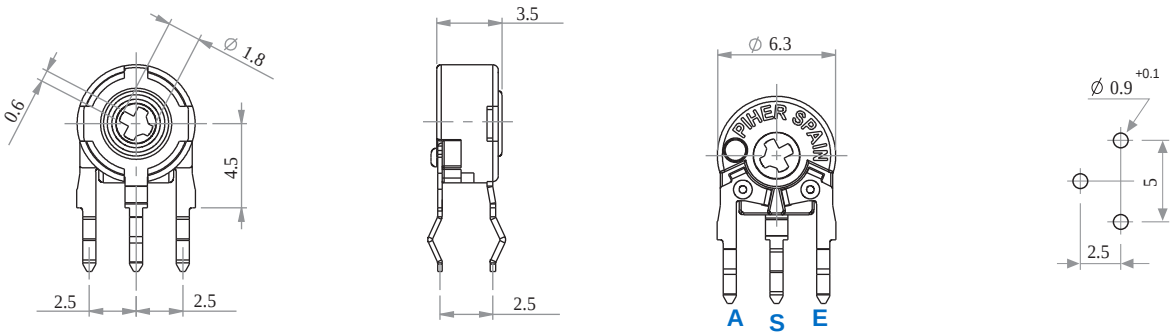

6 mm carbon trimmer potentiometer PT6

Crimped terminals (detail A)

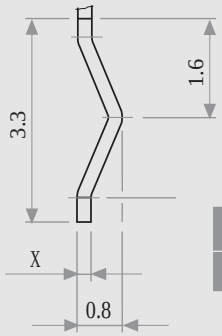

	X
Terminals	0.25
Collector (S)	0.30

This is the default terminals type.

Not-crimped terminals dimensions

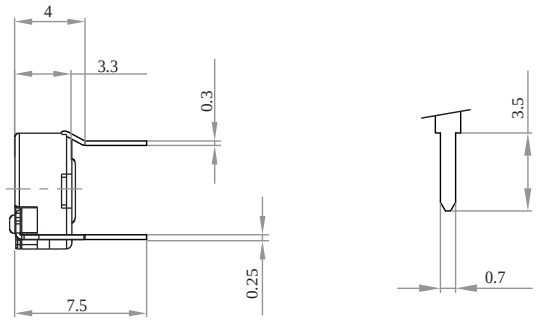

Please indicate “SC” at the end of the part number for this version.

Download the STEP file here:
https://piher.net/piher/?p=894

SMD versions

SMD / SMT version available. See PS-6 and N-6 datasheets at: www.piher.net

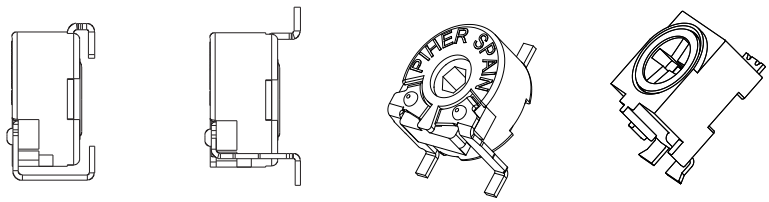

Standard Tapers

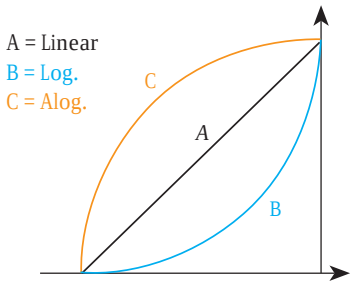

Detents / Stop positions

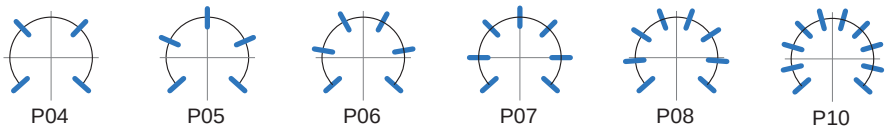

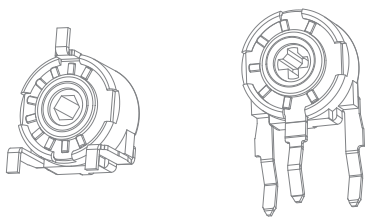

Relative detent positions along the total mechanical travel.

NOTES FOR DETENTED VERSIONS

(1) All detented versions will be studied case by case. Contact Piher for leadtimes and availability.

(2) Others: check availability. Unless otherwise specified the detents are evenly spaced (using the end points as reference).

For more than 10 detents versions please contact Piher for more information.

(3) Standard mechanical life: 100 cycles.

(4) Long life versions are available under request. Contact Piher for more information.

(5) Detent torque can vary from 1.2 to 2.5 times the standard potentiometer torque.

(6) The colour of the rotor will be violet.

6 mm carbon trimmer potentiometer PT6

Knobs/Shafts

By default shafts, knobs & thumweels are delivered unassembled.
Mounted shafts, knobs & thumbweels are delivered at random position. Custom positioning available.
If you wish to use your own plastic shaft/knob/actuator please contact Piher for advice about compatible materials.

Ref.: 5155 / Fig. 1
Default knob. Standard colour: white.

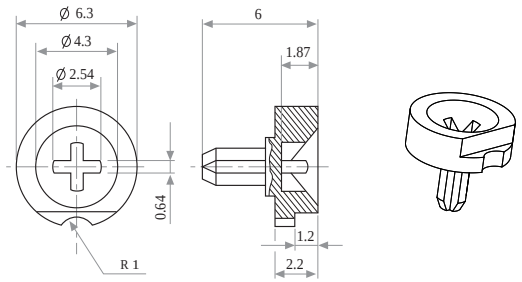

Ref.: 6132 / Fig. 2
Shaft. Not suitable for magazine packaging

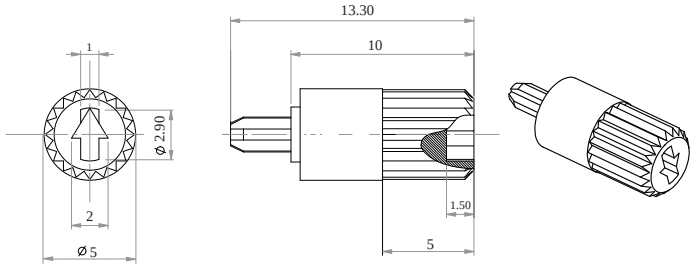

Ref.: 5141 / Fig. 3
Colour: grey. For other colours check availability.

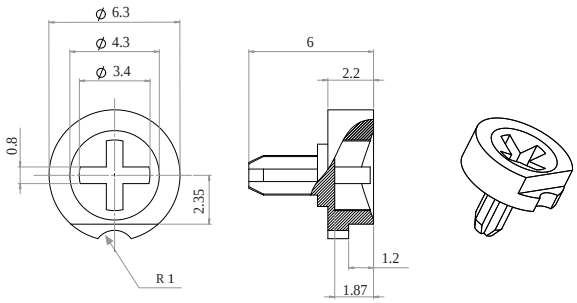

Ref.: 6172 / Fig. 4
Colour: grey. For other colours check availability.

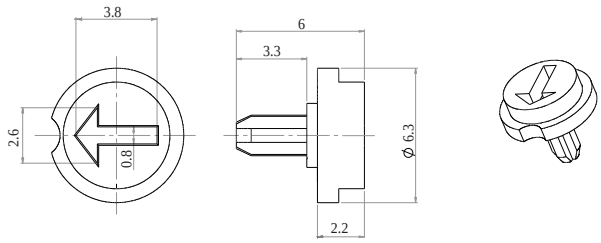

Ref.: 6148 / Fig. 5

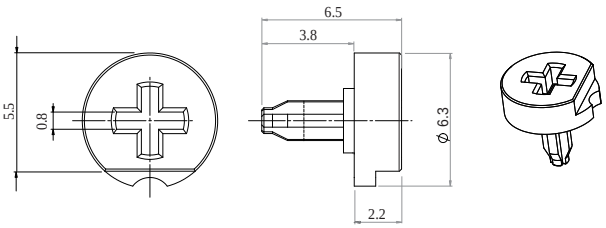

Ref.: 6160 / Fig. 6

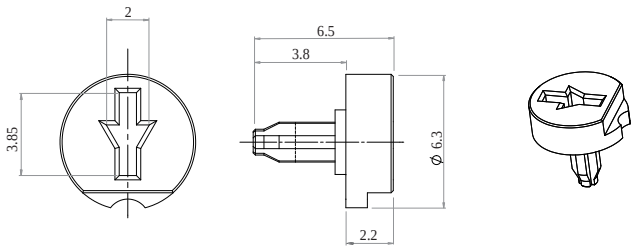

Positioning

Default position = CCW

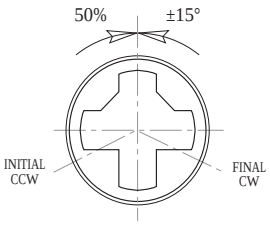

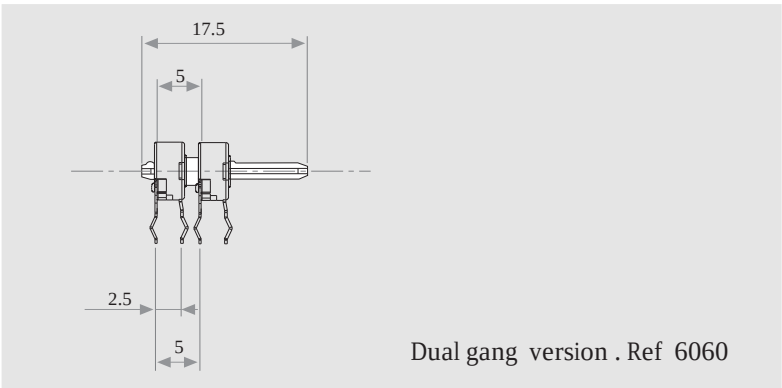

6 mm carbon trimmer potentiometer PT6

Packaging

BOXES / BULK

Model	Units per box
All	1.000

Box dimensions (mm):
185x85x40

AUTOMATIC INSERTION

Magazines	Units per magazine
PT-6 V & PT-6 WV	80 Pieces

Magazines for PT-6 V with or without crimping.

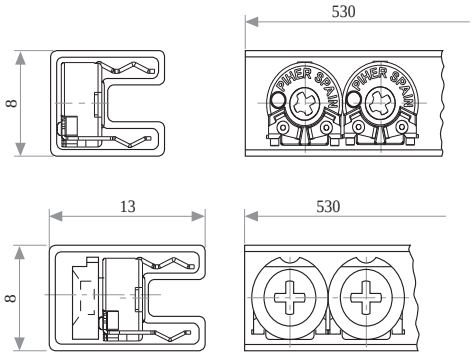

Tests

		Typical variations
Electrical life	1.000 h. @ 50° C; 0.25 W	±5 %
Mechanical life (cycles)	1000 @ 10 CPM ...15 CPM	±3 % (Rn < 1 M)
Temperature coefficient	–25° C; +70° C	±300 ppm (Rn <100 K)
Thermal cycling	16 h. @ 85° C; 2h. @ -25° C	±2.5 %
Damp heat	500 h. @ 40° C @ 95% HR	±5 %
Vibration (for each plane,X,Y,Z)	2 h. @ 10 Hz. ... 55 Hz.	±2 %

Out of range values may not comply these results

Recommended connections

Piher potentiometer's recommended connection circuit for a position sensor or control application.
(voltage divider circuit electronic design)

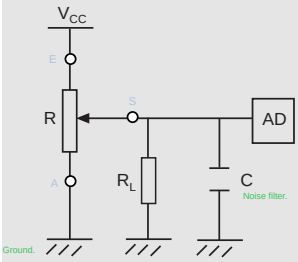

$R_L \approx 100 \times R$

Power rating curve

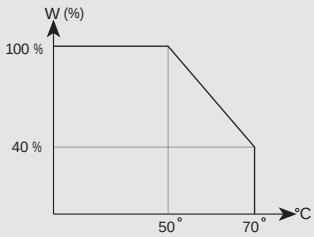

Disclaimer

The product information in this catalogue is for reference purposes. Please contact Piher for the most up to date and accurate design information.

Piher Sensors & Controls S.A., its affiliates, agents, and employees, and all persons acting on its or their behalf (collectively, "Piher"), disclaim any and all liability for any errors, inaccuracies or incompleteness contained herein or in any other disclosure relating to any product described herein.

Piher disclaims any and all liability arising out of the use or application of any product described herein or of any information provided herein to the maximum extent permitted by law. The product specifications do not expand or otherwise modify Piher's terms and conditions of sale, including but not limited to the warranty expressed therein, which apply to these products.

No licence, express or implied, by estoppel or otherwise, to any intellectual property rights is granted by this document or by any conduct of Piher.

The products shown herein are not designed for use in medical, life-saving, or life-sustaining applications unless otherwise expressly indicated. Customers using or selling Piher products not expressly indicated for use in such applications do so entirely at their own risk and agree to fully indemnify Piher for any damages arising or resulting from such use or sale. Please contact authorised Piher personnel to obtain written terms and conditions regarding products designed for such applications.

Product names and markings noted herein may be trademarks of their respective owners.

Information contained in and/or attached to this catalogue may be subject to export control regulations of the European Community, USA, or other countries. Each recipient of this document is responsible to ensure that usage and/or transfer of any information contained in this document complies with all relevant export control regulations. If you are in any doubt about the export control restrictions that apply to this information, please contact the sender immediately. For any Piher Exports, Note: All products / technologies are EAR99 Classified commodities. Exports from the United States are in accordance with the Export Administration Regulations. Diversion contrary to US law is prohibited.

Piher is an Amphenol™ company.

All Piher products can be adapted to meet customer´s requirements.
Please always use the latest updated datasheets and 3D models published at our website www.piher.net.

Contact

Piher Sensing Systems
Polígono Industrial Municipal
Vial T2 N°22
31500 Tudela - Spain
Tel: +34-948-820450

sales@piher.net

www.piher.net

rev100620

OCEAN CHIPS
Океан Электроники
Поставка электронных компонентов

Компания «Океан Электроники» предлагает заключение долгосрочных отношений при поставках импортных электронных компонентов на взаимовыгодных условиях!

Наши преимущества:

- Поставка оригинальных импортных электронных компонентов напрямую с производств Америки, Европы и Азии, а так же с крупнейших складов мира;
- Широкая линейка поставок активных и пассивных импортных электронных компонентов (более 30 млн. наименований);
- Поставка сложных, дефицитных, либо снятых с производства позиций;
- Оперативные сроки поставки под заказ (от 5 рабочих дней);
- Экспресс доставка в любую точку России;
- Помощь Конструкторского Отдела и консультации квалифицированных инженеров;
- Техническая поддержка проекта, помощь в подборе аналогов, поставка прототипов;
- Поставка электронных компонентов под контролем ВП;
- Система менеджмента качества сертифицирована по Международному стандарту ISO 9001;
- При необходимости вся продукция военного и аэрокосмического назначения проходит испытания и сертификацию в лаборатории (по согласованию с заказчиком);
- Поставка специализированных компонентов военного и аэрокосмического уровня качества (Xilinx, Altera, Analog Devices, Intersil, Interpoint, Microsemi, Actel, Aeroflex, Peregrine, VPT, Syfer, Eurofarad, Texas Instruments, MS Kennedy, Miteq, Cobham, E2V, MA-COM, Hittite, Mini-Circuits, General Dynamics и др.);

Компания «Океан Электроники» является официальным дистрибьютором и эксклюзивным представителем в России одного из крупнейших производителей разъемов военного и аэрокосмического назначения **«JONHON»**, а так же официальным дистрибьютором и эксклюзивным представителем в России производителя высокотехнологичных и надежных решений для передачи СВЧ сигналов **«FORSTAR»**.

AVIC JONHON

«JONHON» (основан в 1970 г.)

Разъемы специального, военного и аэрокосмического назначения:

(Применяются в военной, авиационной, аэрокосмической, морской, железнодорожной, горно- и нефтедобывающей отраслях промышленности)

«FORSTAR» (основан в 1998 г.)

ВЧ соединители, коаксиальные кабели, кабельные сборки и микроволновые компоненты:

(Применяются в телекоммуникациях гражданского и специального назначения, в средствах связи, РЛС, а так же военной, авиационной и аэрокосмической отраслях промышленности).

FORSTAR®

Телефон: 8 (812) 309-75-97 (многоканальный)
Факс: 8 (812) 320-03-32
Электронная почта: ocean@oceanchips.ru
Web: http://oceanchips.ru/
Адрес: 198099, г. Санкт-Петербург, ул. Калинина, д. 2, корп. 4, лит. А