IS42S83200J, IS42S16160J
IS45S83200J, IS45S16160J

32Meg x 8, 16Meg x16
256Mb SYNCHRONOUS DRAM

MARCH 2015

FEATURES

- Clock frequency: 166, 143, 133 MHz
- Fully synchronous; all signals referenced to a positive clock edge
- Internal bank for hiding row access/precharge
- Single Power supply: 3.3V ± 0.3V
- LVTTL interface
- Programmable burst length
  – (1, 2, 4, 8, full page)
- Programmable burst sequence: Sequential/Interleave
- Auto Refresh (CBR)
- Self Refresh
- 8K refresh cycles every 32 ms (A2 grade) or 64 ms (commercial, industrial, A1 grade)
- Random column address every clock cycle
- Programmable $\overline{CAS}$ latency (2, 3 clocks)
- Burst read/write and burst read/single write operations capability
- Burst termination by burst stop and precharge command

OPTIONS

- Package:
  54-pin TSOP-II
  54-ball BGA
- Operating Temperature Range:
  Commercial (0°C to +70°C)
  Industrial (-40°C to +85°C)
  Automotive Grade A1 (-40°C to +85°C)
  Automotive Grade A2 (-40°C to +105°C)

OVERVIEW

ISSI's 256Mb Synchronous DRAM achieves high-speed data transfer using pipeline architecture. All inputs and outputs signals refer to the rising edge of the clock input. The 256Mb SDRAM is organized as follows.

IS42S83200J	IS42S16160J
8M x 8 x 4 Banks	4M x16x4 Banks
54-pin TSOPII	54-pin TSOPII
54-ball BGA	54-ball BGA

KEY TIMING PARAMETERS

Parameter	-6	-7	Unit
Clk Cycle Time			
$\overline{CAS}$ Latency = 3	6	7	ns
$\overline{CAS}$ Latency = 2	10	7.5	ns
Clk Frequency			
$\overline{CAS}$ Latency = 3	166	143	Mhz
$\overline{CAS}$ Latency = 2	100	133	Mhz
Access Time from Clock			
$\overline{CAS}$ Latency = 3	5.4	5.4	ns
$\overline{CAS}$ Latency = 2	5.4	5.4	ns

ADDRESS TABLE

Parameter		32M x 8	16M x 16
Configuration		8M x 8 x 4 banks	4M x 16 x 4 banks
Refresh Count			
	Com./Ind.	8K/64ms	8K/64ms
	A1	8K/64ms	8K/64ms
	A2	8K/32ms	8K/32ms
Row Addresses		A0-A12	A0-A12
Column Addresses		A0-A9	A0-A8
Bank Address Pins		BA0, BA1	BA0, BA1
Auto Precharge Pins		A10/AP	A10/AP

Copyright © 2015 Integrated Silicon Solution, Inc. All rights reserved. ISSI reserves the right to make changes to this specification and its products at any time without notice. ISSI assumes no liability arising out of the application or use of any information, products or services described herein. Customers are advised to obtain the latest version of this device specification before relying on any published information and before placing orders for products.

Integrated Silicon Solution, Inc. does not recommend the use of any of its products in life support applications where the failure or malfunction of the product can reasonably be expected to cause failure of the life support system or to significantly affect its safety or effectiveness. Products are not authorized for use in such applications unless Integrated Silicon Solution, Inc. receives written assurance to its satisfaction, that:
a.) the risk of injury or damage has been minimized;
b.) the user assume all such risks; and
c.) potential liability of Integrated Silicon Solution, Inc is adequately protected under the circumstances

DEVICE OVERVIEW

The 256Mb SDRAM is a high speed CMOS, dynamic random-access memory designed to operate in 3.3V V_{DD} and 3.3V V_{DDQ} memory systems containing 268,435,456 bits. Internally configured as a quad-bank DRAM with a synchronous interface. Each 67,108,864-bit bank is organized as 8,192 rows by 512 columns by 16 bits or 8,192 rows by 1,024 columns by 8 bits.

The 256Mb SDRAM includes an AUTO REFRESH MODE, and a power-saving, power-down mode. All signals are registered on the positive edge of the clock signal, CLK. All inputs and outputs are LVTTL compatible.

The 256Mb SDRAM has the ability to synchronously burst data at a high data rate with automatic column-address generation, the ability to interleave between internal banks to hide precharge time and the capability to randomly change column addresses on each clock cycle during burst access.

A self-timed row precharge initiated at the end of the burst sequence is available with the AUTO PRECHARGE function enabled. Precharge one bank while accessing one of the other three banks will hide the precharge cycles and provide seamless, high-speed, random-access operation.

SDRAM read and write accesses are burst oriented starting at a selected location and continuing for a programmed number of locations in a programmed sequence. The registration of an ACTIVE command begins accesses, followed by a READ or WRITE command. The ACTIVE command in conjunction with address bits registered are used to select the bank and row to be accessed (BA0, BA1 select the bank; A0-A12 select the row). The READ or WRITE commands in conjunction with address bits registered are used to select the starting column location for the burst access.

Programmable READ or WRITE burst lengths consist of 1, 2, 4 and 8 locations or full page, with a burst terminate option.

FUNCTIONAL BLOCK DIAGRAM (FOR 4Mx16x4 BANKS SHOWN)

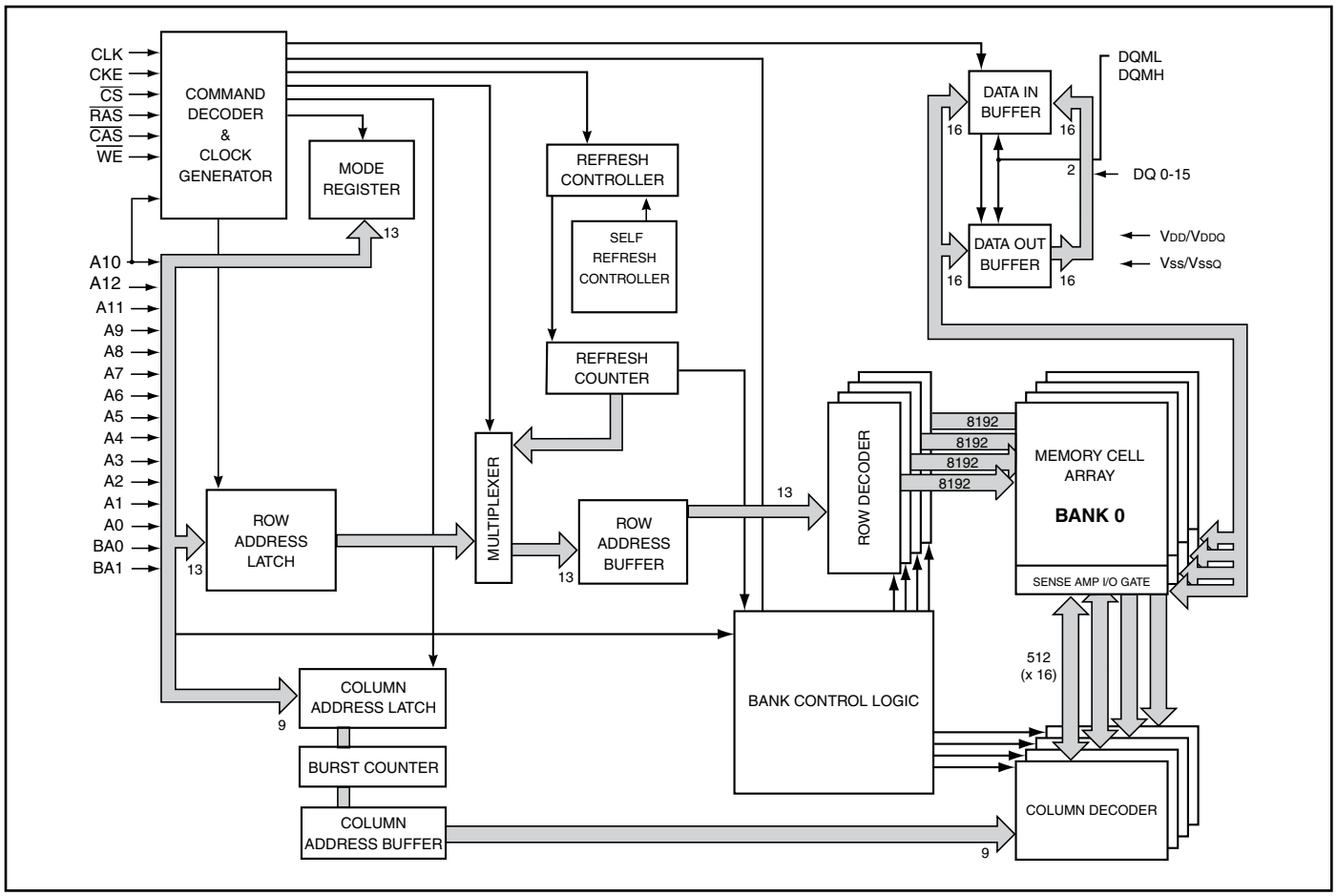

PIN CONFIGURATIONS
54 pin TSOP - Type II for x8

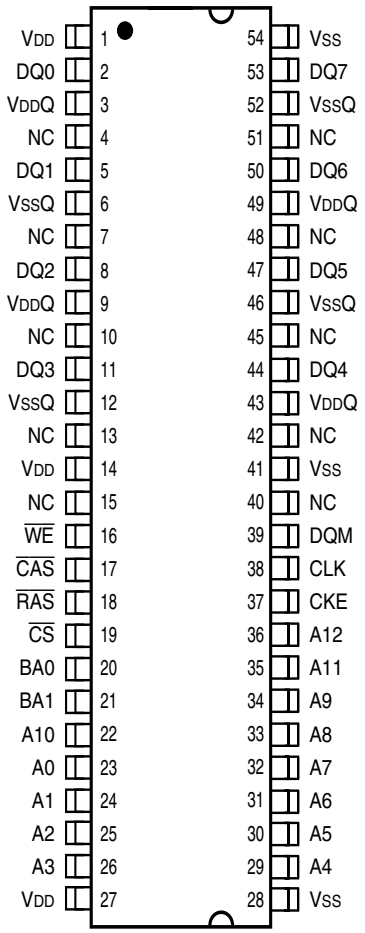

PIN DESCRIPTIONS

A0-A12	Row Address Input
A0-A9	Column Address Input
BA0, BA1	Bank Select Address
DQ0 to DQ7	Data I/O
CLK	System Clock Input
CKE	Clock Enable
$\overline{CS}$	Chip Select
$\overline{RAS}$	Row Address Strobe Command
$\overline{CAS}$	Column Address Strobe Command

$\overline{WE}$	Write Enable
DQM	Data Input/Output Mask
V_{DD}	Power
Vss	Ground
V_{DDQ}	Power Supply for I/O Pin
V_{SSQ}	Ground for I/O Pin
NC	No Connection

PIN CONFIGURATIONS
54 pin TSOP - Type II for x16

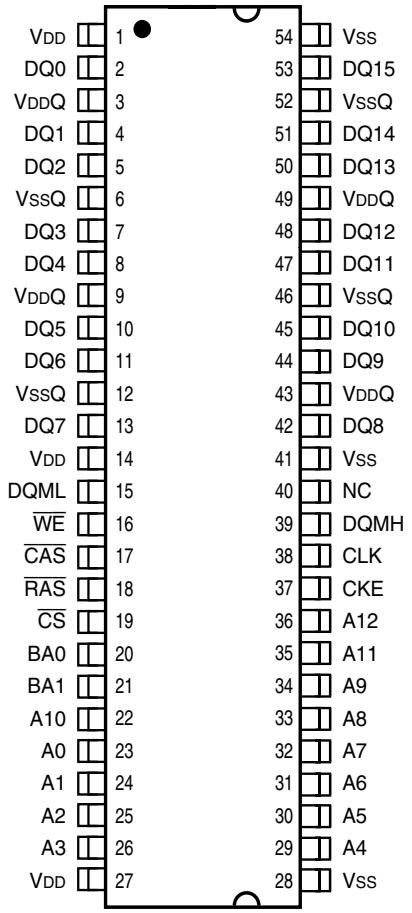

PIN DESCRIPTIONS

A0-A12	Row Address Input
A0-A8	Column Address Input
BA0, BA1	Bank Select Address
DQ0 to DQ15	Data I/O
CLK	System Clock Input
CKE	Clock Enable
$\overline{CS}$	Chip Select
$\overline{RAS}$	Row Address Strobe Command
$\overline{CAS}$	Column Address Strobe Command

$\overline{WE}$	Write Enable
DQML	x16 Lower Byte, Input/Output Mask
DQMH	x16 Upper Byte, Input/Output Mask
V_{DD}	Power
Vss	Ground
V_{DDQ}	Power Supply for I/O Pin
V_{SSQ}	Ground for I/O Pin
NC	No Connection

PIN CONFIGURATION

54-ball TF-BGA for x8 (Top View) (8.00 mm x 8.00 mm Body, 0.8 mm Ball Pitch)
package code: B

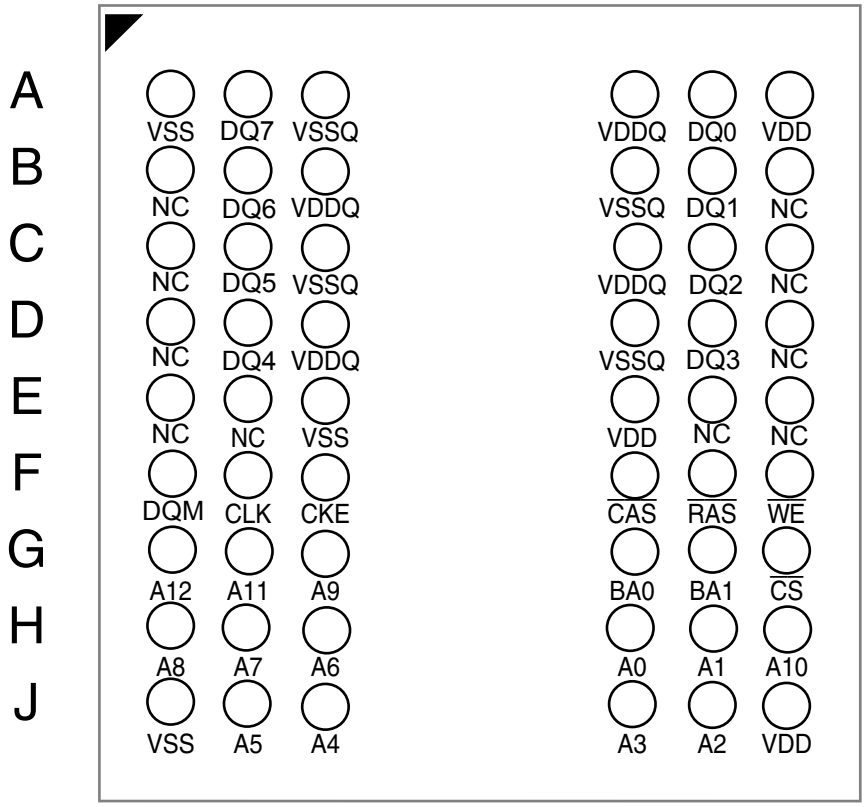

PIN DESCRIPTIONS

A0-A12	Row Address Input
A0-A9	Column Address Input
BA0, BA1	Bank Select Address
DQ0 to DQ7	Data I/O
CLK	System Clock Input
CKE	Clock Enable
$\overline{CS}$	Chip Select
$\overline{RAS}$	Row Address Strobe Command
$\overline{CAS}$	Column Address Strobe Command

$\overline{WE}$	Write Enable
DQM	Data Input/Output Mask
V_{DD}	Power
Vss	Ground
V_{DDQ}	Power Supply for I/O Pin
V_{SSQ}	Ground for I/O Pin
NC	No Connection

PIN CONFIGURATION

54-ball TF-BGA for x16 (Top View) (8.00 mm x 8.00 mm Body, 0.8 mm Ball Pitch)
package code: B

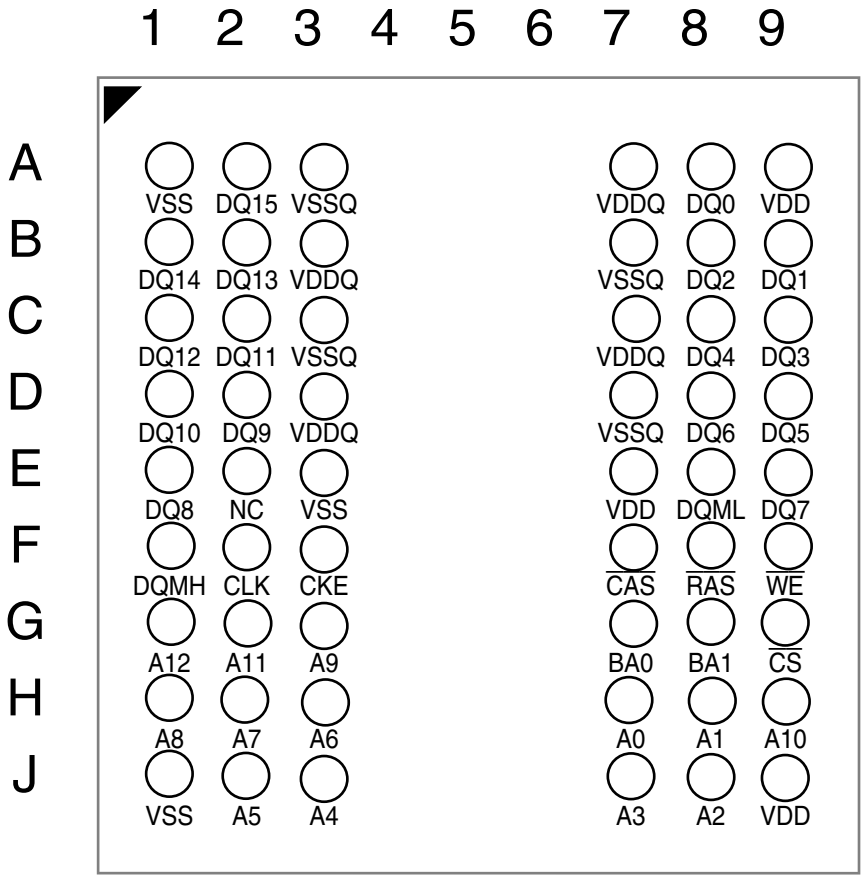

PIN DESCRIPTIONS

A0-A12	Row Address Input
A0-A8	Column Address Input
BA0, BA1	Bank Select Address
DQ0 to DQ15	Data I/O
CLK	System Clock Input
CKE	Clock Enable
$\overline{CS}$	Chip Select
$\overline{RAS}$	Row Address Strobe Command
$\overline{CAS}$	Column Address Strobe Command

$\overline{WE}$	Write Enable
DQML	x16 Lower Byte Input/Output Mask
DQMH	x16 Upper Byte Input/Output Mask
V_{DD}	Power
Vss	Ground
V_{DDQ}	Power Supply for I/O Pin
V_{SSQ}	Ground for I/O Pin
NC	No Connection

PIN FUNCTIONS

Symbol	Type	Function (In Detail)
A0-A12	Input	Address Inputs: A0-A12 are sampled during the ACTIVE command (row-address A0-A12) and READ/WRITE command (column address A0-A9 (x8), or A0-A8 (x16); with A10 defining auto precharge) to select one location out of the memory array in the respective bank. A10 is sampled during a PRECHARGE command to determine if all banks are to be precharged (A10 HIGH) or bank selected by BA0, BA1 (LOW). The address inputs also provide the op-code during a LOAD MODE REGISTER command.
BA0, BA1	Input	Bank Select Address: BA0 and BA1 defines which bank the ACTIVE, READ, WRITE or PRECHARGE command is being applied.
$\overline{CAS}$	Input	$\overline{CAS}$, in conjunction with the $\overline{RAS}$ and $\overline{WE}$, forms the device command. See the "Command Truth Table" for details on device commands.
CKE	Input	The CKE input determines whether the CLK input is enabled. The next rising edge of the CLK signal will be valid when is CKE HIGH and invalid when LOW. When CKE is LOW, the device will be in either power-down mode, clock suspend mode, or self refresh mode. CKE is an asynchronous input.
CLK	Input	CLK is the master clock input for this device. Except for CKE, all inputs to this device are acquired in synchronization with the rising edge of this pin.
$\overline{CS}$	Input	The $\overline{CS}$ input determines whether command input is enabled within the device. Command input is enabled when $\overline{CS}$ is LOW, and disabled with $\overline{CS}$ is HIGH. The device remains in the previous state when $\overline{CS}$ is HIGH.
DQML, DQMH	Input	DQML and DQMH control the lower and upper bytes of the I/O buffers. In read mode,DQML and DQMH control the output buffer. WhenDQML orDQMH is LOW, the corresponding buffer byte is enabled, and when HIGH, disabled. The outputs go to the HIGH impedance state whenDQML/DQMH is HIGH. This function corresponds to $\overline{OE}$ in conventional DRAMs. In write mode,DQML and DQMH control the input buffer. When DQML or DQMH is LOW, the corresponding buffer byte is enabled, and data can be written to the device. WhenDQML or DQMH is HIGH, input data is masked and cannot be written to the device. For IS42S16160G only.
DQM	Input	For IS42S83200G only.
DQ_0-DQ_7 or DQ_0-DQ_{15}	Input/Output	Data on the Data Bus is latched on DQ pins during Write commands, and buffered for output after Read commands.
$\overline{RAS}$	Input	$\overline{RAS}$, in conjunction with $\overline{CAS}$ and $\overline{WE}$, forms the device command. See the "Command Truth Table" item for details on device commands.
$\overline{WE}$	Input	$\overline{WE}$, in conjunction with $\overline{RAS}$ and $\overline{CAS}$, forms the device command. See the "Command Truth Table" item for details on device commands.
V_{DDQ}	Power Supply	V_{DDQ} is the output buffer power supply.
V_{DD}	Power Supply	V_{DD} is the device internal power supply.
V_{SSQ}	Power Supply	V_{SSQ} is the output buffer ground.
V_{SS}	Power Supply	V_{SS} is the device internal ground.

GENERAL DESCRIPTION

READ

The READ command selects the bank from BA0, BA1 inputs and starts a burst read access to an active row. Inputs A0-A9 (x8); A0-A8 (x16) provides the starting column location. When A10 is HIGH, this command functions as an AUTO PRECHARGE command. When the auto precharge is selected, the row being accessed will be precharged at the end of the READ burst. The row will remain open for subsequent accesses when AUTO PRECHARGE is not selected. DQ's read data is subject to the logic level on the DQM inputs two clocks earlier. When a given DQM signal was registered HIGH, the corresponding DQ's will be High-Z two clocks later. DQ's will provide valid data when the DQM signal was registered LOW.

WRITE

A burst write access to an active row is initiated with the WRITE command. BA0, BA1 inputs selects the bank, and the starting column location is provided by inputs A0-A9 (x8); A0-A8 (x16). Whether or not AUTO-PRECHARGE is used is determined by A10.

The row being accessed will be precharged at the end of the WRITE burst, if AUTO PRECHARGE is selected. If AUTO PRECHARGE is not selected, the row will remain open for subsequent accesses.

A memory array is written with corresponding input data on DQ's and DQM input logic level appearing at the same time. Data will be written to memory when DQM signal is LOW. When DQM is HIGH, the corresponding data inputs will be ignored, and a WRITE will not be executed to that byte/column location.

PRECHARGE

The PRECHARGE command is used to deactivate the open row in a particular bank or the open row in all banks. BA0, BA1 can be used to select which bank is precharged or they are treated as "Don't Care". A10 determined whether one or all banks are precharged. After executing this command, the next command for the selected bank(s) is executed after passage of the period t_{RP}, which is the period required for bank precharging. Once a bank has been precharged, it is in the idle state and must be activated prior to any READ or WRITE commands being issued to that bank.

AUTO PRECHARGE

The AUTO PRECHARGE function ensures that the precharge is initiated at the earliest valid stage within a burst. This function allows for individual-bank precharge without requiring an explicit command. A10 to enable the AUTO PRECHARGE function in conjunction with a specific READ or WRITE command. For each individual READ or WRITE command, auto precharge is either enabled or disabled. AUTO PRECHARGE does not apply except in full-page burst mode. Upon completion of the READ or WRITE burst, a precharge of the bank/row that is addressed is automatically performed.

AUTO REFRESH COMMAND

This command executes the AUTO REFRESH operation. The row address and bank to be refreshed are automatically generated during this operation. The stipulated period (t_{RC}) is required for a single refresh operation, and no other commands can be executed during this period. This command is executed at least 8192 times for every T_{REF}. During an AUTO REFRESH command, address bits are "Don't Care". This command corresponds to CBR Auto-refresh.

BURST TERMINATE

The BURST TERMINATE command forcibly terminates the burst read and write operations by truncating either fixed-length or full-page bursts and the most recently registered READ or WRITE command prior to the BURST TERMINATE.

COMMAND INHIBIT

COMMAND INHIBIT prevents new commands from being executed. Operations in progress are not affected, apart from whether the CLK signal is enabled

NO OPERATION

When $\overline{CS}$ is low, the NOP command prevents unwanted commands from being registered during idle or wait states.

LOAD MODE REGISTER

During the LOAD MODE REGISTER command the mode register is loaded from A0-A12. This command can only be issued when all banks are idle.

ACTIVE COMMAND

When the ACTIVE COMMAND is activated, BA0, BA1 inputs selects a bank to be accessed, and the address inputs on A0-A12 selects the row. Until a PRECHARGE command is issued to the bank, the row remains open for accesses.

COMMAND TRUTH TABLE

Function	CKE n – 1	n	$\overline{CS}$	$\overline{RAS}$	$\overline{CAS}$	$\overline{WE}$	BA1	BA0	A10	A12, A11 A9 - A0
Device deselect (DESL)	H	×	H	×	×	×	×	×	×	×
No operation (NOP)	H	×	L	H	H	H	×	×	×	×
Burst stop (BST)	H	×	L	H	H	L	×	×	×	×
Read	H	×	L	H	L	H	V	V	L	V
Read with auto precharge	H	×	L	H	L	H	V	V	H	V
Write	H	×	L	H	L	L	V	V	L	V
Write with auto precharge	H	×	L	H	L	L	V	V	H	V
Bank activate (ACT)	H	×	L	L	H	H	V	V	V	V
Precharge select bank (PRE)	H	×	L	L	H	L	V	V	L	×
Precharge all banks (PALL)	H	×	L	L	H	L	×	×	H	×
CBR Auto-Refresh (REF)	H	H	L	L	L	H	×	×	×	×
Self-Refresh (SELF)	H	L	L	L	L	H	×	×	×	×
Mode register set (MRS)	H	×	L	L	L	L	L	L	L	V

Note: H=V_{IH}, L=V_{IL} x= V_{IH} or V_{IL}, V = Valid Data.

DQM TRUTH TABLE

Function	CKE n-1	n	DQMH	DQML
Data write / output enable	H	×	L	L
Data mask / output disable	H	×	H	H
Upper byte write enable / output enable	H	×	L	×
Lower byte write enable / output enable	H	×	×	L
Upper byte write inhibit / output disable	H	×	H	×
Lower byte write inhibit / output disable	H	×	×	H

Note: H=V_{IH}, L=V_{IL} x= V_{IH} or V_{IL}, V = Valid Data.

CKE TRUTH TABLE

Current State /Function	CKE n – 1	CKE n	$\overline{CS}$	$\overline{RAS}$	$\overline{CAS}$	$\overline{WE}$	Address
Activating Clock suspend mode entry	H	L	×	×	×	×	×
Any Clock suspend mode	L	L	×	×	×	×	×
Clock suspend mode exit	L	H	×	×	×	×	×
Auto refresh command Idle (REF)	H	H	L	L	L	H	×
Self refresh entry Idle (SELF)	H	L	L	L	L	H	×
Power down entry Idle	H	L	×	×	×	×	×
Self refresh exit	L	H	L	H	H	H	×
	L	H	H	×	×	×	×
Power down exit	L	H	×	×	×	×	×

Note: H=V_{IH}, L=V_{IL} x= V_{IH} or V_{IL}, V = Valid Data.

FUNCTIONAL TRUTH TABLE

Current State	$\overline{CS}$	$\overline{RAS}$	$\overline{CAS}$	$\overline{WE}$	Address	Command	Action
Idle	H	X	X	X	X	DESL	Nop or Power Down(2)
	L	H	H	H	X	NOP	Nop or Power Down(2)
	L	H	H	L	X	BST	Nop or Power Down
	L	H	L	H	BA, CA, A10	READ/READA	ILLEGAL (3)
	L	H	L	L	A, CA, A10	WRIT/ WRITA	ILLEGAL(3)
	L	L	H	H	BA, RA	ACT	Row activating
	L	L	H	L	BA, A10	PRE/PALL	Nop
	L	L	L	H	X	REF/SELF	Auto refresh or Self-refresh(4)
	L	L	L	L	OC, BA1=L	MRS	Mode register set
Row Active	H	X	X	X	X	DESL	Nop
	L	H	H	H	X	NOP	Nop
	L	H	H	L	X	BST	Nop
	L	H	L	H	BA, CA, A10	READ/READA	Begin read (5)
	L	H	L	L	BA, CA, A10	WRIT/ WRITA	Begin write (5)
	L	L	H	H	BA, RA	ACT	ILLEGAL (3)
	L	L	H	L	BA, A10	PRE/PALL	Precharge Precharge all banks(6)
	L	L	L	H	X	REF/SELF	ILLEGAL
	L	L	L	L	OC, BA	MRS	ILLEGAL
Read	H	X	X	X	X	DESL	Continue burst to end to Row active
	L	H	H	H	X	NOP	Continue burst to end Row Row active
	L	H	H	L	X	BST	Burst stop, Row active
	L	H	L	H	BA, CA, A10	READ/READA	Terminate burst, begin new read (7)
	L	H	L	L	BA, CA, A10	WRIT/WRITA	Terminate burst, begin write (7,8)
	L	L	H	H	BA, RA	ACT	ILLEGAL (3)
	L	L	H	L	BA, A10	PRE/PALL	Terminate burst Precharging
	L	L	L	H	X	REF/SELF	ILLEGAL
	L	L	L	L	OC, BA	MRS	ILLEGAL
Write	H	X	X	X	X	DESL	Continue burst to end Write recovering
	L	H	H	H	X	NOP	Continue burst to end Write recovering
	L	H	H	L	X	BST	Burst stop, Row active
	L	H	L	H	BA, CA, A10	READ/READA	Terminate burst, start read : Determine AP (7,8)
	L	H	L	L	BA, CA, A10	WRIT/WRITA	Terminate burst, new write : Determine AP (7)
	L	L	H	H	BA, RA	RA ACT	ILLEGAL (3)
	L	L	H	L	BA, A10	PRE/PALL	Terminate burst Precharging (9)
	L	L	L	H	X	REF/SELF	ILLEGAL
	L	L	L	L	OC, BA	MRS	ILLEGAL

Note: H=V_{IH}, L=V_{IL} x= V_{IH} or V_{IL}, V = Valid Data, BA= Bank Address, CA+Column Address, RA=Row Address, OC= Op-Code

FUNCTIONAL TRUTH TABLE Continued:

Current State	$\overline{CS}$	$\overline{RAS}$	$\overline{CAS}$	$\overline{WE}$	Address	Command	Action
Read with auto Precharging	H	×	×	×	×	DESL	Continue burst to end, Precharge
	L	H	H	H	x	NOP	Continue burst to end, Precharge
	L	H	H	L	×	BST	ILLEGAL
	L	H	L	H	BA, CA, A10	READ/READA	ILLEGAL (11)
	L	H	L	L	BA, CA, A10	WRIT/ WRITA	ILLEGAL (11)
	L	L	H	H	BA, RA	ACT	ILLEGAL (3)
	L	L	H	L	BA, A10	PRE/PALL	ILLEGAL (11)
	L	L	L	H	×	REF/SELF	ILLEGAL
	L	L	L	L	OC, BA	MRS	ILLEGAL
Write with Auto Precharge	H	×	×	×	×	DESL	Continue burst to end, Write recovering with auto precharge
	L	H	H	H	×	NOP	Continue burst to end, Write recovering with auto precharge
	L	H	H	L	×	BST	ILLEGAL
	L	H	L	H	BA, CA, A10	READ/READA	ILLEGAL(11)
	L	H	L	L	BA, CA, A10	WRIT/ WRITA	ILLEGAL (11)
	L	L	H	H	BA, RA	ACT	ILLEGAL (3,11)
	L	L	H	L	BA, A10	PRE/PALL	ILLEGAL (3,11)
	L	L	L	H	×	REF/SELF	ILLEGAL
	L	L	L	L	OC, BA	MRS	ILLEGAL
Precharging	H	×	×	×	×	DESL	Nop, Enter idle after tRP
	L	H	H	H	×	NOP	Nop, Enter idle after tRP
	L	H	H	L	×	BST	Nop, Enter idle after tRP
	L	H	L	H	BA, CA, A10	READ/READA	ILLEGAL (3)
	L	H	L	L	BA, CA, A10	WRIT/WRITA	ILLEGAL (3)
	L	L	H	H	BA, RA	ACT	ILLEGAL(3)
	L	L	H	L	BA, A10	PRE/PALL	Nop Enter idle after tRP
	L	L	L	H	×	REF/SELF	ILLEGAL
	L	L	L	L	OC, BA	MRS	ILLEGAL
Row Activating	H	×	×	×	×	DESL	Nop, Enter bank active after tRCD
	L	H	H	H	×	NOP	Nop, Enter bank active after tRCD
	L	H	H	L	×	BST	Nop, Enter bank active after tRCD
	L	H	L	H	BA, CA, A10	READ/READA	ILLEGAL (3)
	L	H	L	L	BA, CA, A10	WRIT/WRITA	ILLEGAL (3)
	L	L	H	H	BA, RA	ACT	ILLEGAL (3,9)
	L	L	H	L	BA, A10	PRE/PALL	ILLEGAL (3)
	L	L	L	H	×	REF/SELF	ILLEGAL
	L	L	L	L	OC, BA	MRS	ILLEGAL

Note: H=V_{IH}, L=V_{IL} x= V_{IH} or V_{IL}, V = Valid Data, BA= Bank Address, CA+Column Address, RA=Row Address, OC= Op-Code

FUNCTIONAL TRUTH TABLE Continued:

Current State	$\overline{CS}$	$\overline{RAS}$	$\overline{CAS}$	$\overline{WE}$	Address	Command	Action
Write Recovering	H	×	×	×	×	DESL	Nop, Enter row active after tDPL
	L	H	H	H	×	NOP	Nop, Enter row active after tDPL
	L	H	H	L	×	BST	Nop, Enter row active after tDPL
	L	H	L	H	BA, CA, A10	READ/READA	Begin read (8)
	L	H	L	L	BA, CA, A10	WRIT/ WRITA	Begin new write
	L	L	H	H	BA, RA	ACT	ILLEGAL (3)
	L	L	H	L	BA, A10	PRE/PALL	ILLEGAL (3)
	L	L	L	H	×	REF/SELF	ILLEGAL
	L	L	L	L	OC, BA	MRS	ILLEGAL
Write Recovering with Auto Precharge	H	×	×	×	×	DESL	Nop, Enter precharge after tDPL
	L	H	H	H	×	NOP	Nop, Enter precharge after tDPL
	L	H	H	L	×	BST	Nop, Enter row active after tDPL
	L	H	L	H	BA, CA, A10	READ/READA	ILLEGAL(3,8,11)
	L	H	L	L	BA, CA, A10	WRIT/WRITA	ILLEGAL (3,11)
	L	L	H	H	BA, RA	ACT	ILLEGAL (3,11)
	L	L	H	L	BA, A10	PRE/PALL	ILLEGAL (3,11)
	L	L	L	H	×	REF/SELF	ILLEGAL
	L	L	L	L	OC, BA	MRS	ILLEGAL
Refresh	H	×	×	×	×	DESL	Nop, Enter idle after tRC
	L	H	H	×	×	NOP/BST	Nop, Enter idle after tRC
	L	H	L	H	BA, CA, A10	READ/READA	ILLEGAL
	L	H	L	L	BA, CA, A10	WRIT/WRITA	ILLEGAL
	L	L	H	H	BA, RA	ACT	ILLEGAL
	L	L	H	L	BA, A10	PRE/PALL	ILLEGAL
	L	L	L	H	×	REF/SELF	ILLEGAL
	L	L	L	L	OC, BA	MRS	ILLEGAL
Mode Register Accessing	H	×	×	×	×	DESL	Nop, Enter idle after 2 clocks
	L	H	H	H	×	NOP	Nop, Enter idle after 2 clocks
	L	H	H	L	×	BST	ILLEGAL
	L	H	L	×	BA, CA, A10	READ/WRITE	ILLEGAL
	L	L	×	×	BA, RA	ACT/PRE/PALL REF/MRS	ILLEGAL

Note: H=V_{IH}, L=V_{IL} x= V_{IH} or V_{IL}, V = Valid Data, BA= Bank Address, CA+Column Address, RA=Row Address, OC= Op-Code

Notes:
1. All entries assume that CKE is active (CKEn-1=CKEn=H).
2. If both banks are idle, and CKE is inactive (Low), the device will enter Power Down mode. All input buffers except CKE will be disabled.
3. Illegal to bank in specified states; Function may be legal in the bank indicated by Bank Address (BA), depending on the state of that bank.
4. If both banks are idle, and CKE is inactive (Low), the device will enter Self-Refresh mode. All input buffers except CKE will be disabled.
5. Illegal if tRCD is not satisfied.
6. Illegal if tRAS is not satisfied.
7. Must satisfy burst interrupt condition.
8. Must satisfy bus contention, bus turn around, and/or write recovery requirements.
9. Must mask preceding data which don't satisfy tDPL.
10. Illegal if tRRD is not satisfied.
11. Illegal for single bank, but legal for other banks.

CKE RELATED COMMAND TRUTH TABLE[1]

Current State	Operation	CKE n-1	CKE n	$\overline{CS}$	$\overline{RAS}$	$\overline{CAS}$	$\overline{WE}$	Address
Self-Refresh (S.R.)	INVALID, CLK (n - 1) would exit S.R.	H	X	X	X	X	X	X
	Self-Refresh Recovery[2]	L	H	H	X	X	X	X
	Self-Refresh Recovery[2]	L	H	L	H	H	X	X
	Illegal	L	H	L	H	L	X	X
	Illegal	L	H	L	L	X	X	X
	Maintain S.R.	L	L	X	X	X	X	X
Self-Refresh Recovery	Idle After t_{RC}	H	H	H	X	X	X	X
	Idle After t_{RC}	H	H	L	H	H	X	X
	Illegal	H	H	L	H	L	X	X
	Illegal	H	H	L	L	X	X	X
	Begin clock suspend next cycle[5]	H	L	H	X	X	X	X
	Begin clock suspend next cycle[5]	H	L	L	H	H	X	X
	Illegal	H	L	L	H	L	X	X
	Illegal	H	L	L	L	X	X	X
	Exit clock suspend next cycle[2]	L	H	X	X	X	X	X
	Maintain clock suspend	L	L	X	X	X	X	X
Power-Down (P.D.)	INVALID, CLK (n - 1) would exit P.D.	H	X	X	X	X	X	—
	EXIT P.D. --> Idle[2]	L	H	X	X	X	X	X
	Maintain power down mode	L	L	X	X	X	X	X
All Banks Idle	Refer to operations in Operative Command Table	H	H	H	X	X	X	—
	Refer to operations in Operative Command Table	H	H	L	H	X	X	—
	Refer to operations in Operative Command Table	H	H	L	L	H	X	—
	Auto-Refresh	H	H	L	L	L	H	X
	Refer to operations in Operative Command Table	H	H	L	L	L	L	Op - Code
	Refer to operations in Operative Command Table	H	L	H	X	X	X	—
	Refer to operations in Operative Command Table	H	L	L	H	X	X	—
	Refer to operations in Operative Command Table	H	L	L	L	H	X	—
	Self-Refresh[3]	H	L	L	L	L	H	X
	Refer to operations in Operative Command Table	H	L	L	L	L	L	Op - Code
	Power-Down[3]	L	X	X	X	X	X	X
Any state	Refer to operations in Operative Command Table	H	H	X	X	X	X	X
other than	Begin clock suspend next cycle[4]	H	L	X	X	X	X	X
listed above	Exit clock suspend next cycle	L	H	X	X	X	X	X
	Maintain clock suspend	L	L	X	X	X	X	X

Notes:
1. H : High level, L : low level, X : High or low level (Don't care).
2. CKE Low to High transition will re-enable CLK and other inputs asynchronously. A minimum setup time must be satisfied before any command other than EXIT.
3. Power down and Self refresh can be entered only from the both banks idle state.
4. Must be legal command as defined in Operative Command Table.
5. Illegal if t_{XSR} is not satisfied.

STATE DIAGRAM

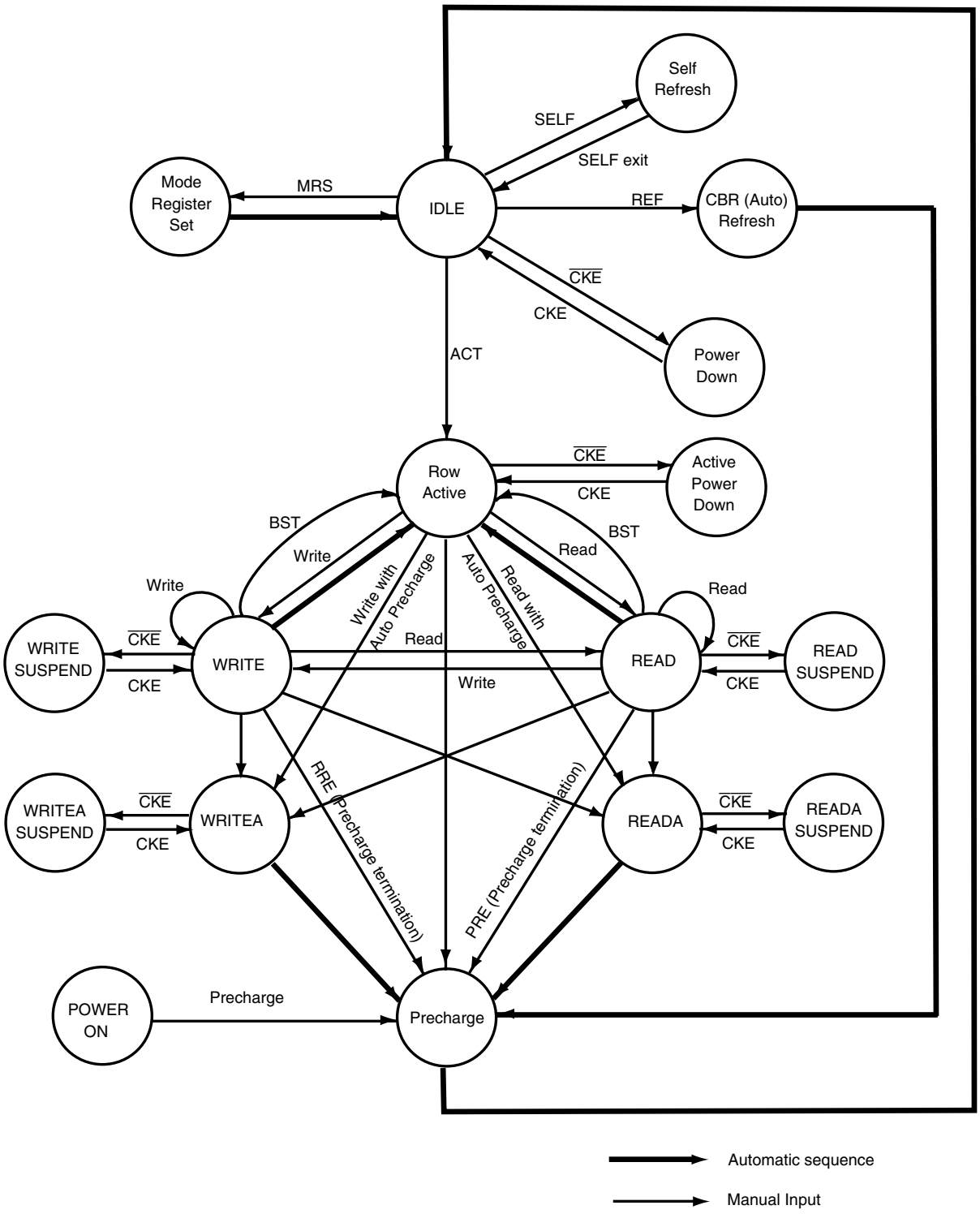

ABSOLUTE MAXIMUM RATINGS(1)

Symbol	Parameters		Rating	Unit
$V_{DD\ MAX}$	Maximum Supply Voltage		–0.5 to +4.6	V
$V_{DDQ\ MAX}$	Maximum Supply Voltage for Output Buffer		–0.5 to +4.6	V
V_{IN}	Input Voltage		–0.5 to V_{DD} + 0.5	V
V_{OUT}	Output Voltage		–1.0 to V_{DDQ} + 0.5	V
$P_{D\ MAX}$	Allowable Power Dissipation		1	W
I_{CS}	Output Shorted Current		50	mA
T_{OPR}	Operating Temperature	Com.	0 to +70	°C
		Ind.	–40 to +85	
		A1	–40 to +85	
		A2	–40 to +105	
T_{STG}	Storage Temperature		–65 to +150	°C

Notes:
1. Stress greater than those listed under ABSOLUTE MAXIMUM RATINGS may cause permanent damage to the device. This is a stress rating only and functional operation of the device at these or any other conditions above those indicated in the operational sections of this specification is not implied. Exposure to absolute maximum rating conditions for extended periods may affect reliability.
2. All voltages are referenced to Vss.

DC RECOMMENDED OPERATING CONDITIONS

(T_A = 0°C to +70°C for Commercial grade. T_A = -40°C to +85°C for Industrial and A1 grade. T_A = -40°C to +105°C for A2 grade.)

Symbol	Parameter	Min.	Typ.	Max.	Unit
V_{DD}	Supply Voltage	3.0	3.3	3.6	V
V_{DDQ}	I/O Supply Voltage	3.0	3.3	3.6	V
V_{IH}(1)	Input High Voltage	2.0	—	V_{DDQ} + 0.3	V
V_{IL}(2)	Input Low Voltage	-0.3	—	+0.8	V

Note:
1. V_{IH} (overshoot): V_{IH} (max) = V_{DDQ} +1.2V (PULSE WIDTH ≤ 3ns).
2. V_{IL} (undershoot): V_{IH} (min) = -1.2V (PULSE WIDTH ≤ 3ns).
3. All voltages are referenced to Vss.

CAPACITANCE CHARACTERISTICS (At T_A = 0 to +25°C, V_{DD} = V_{DDQ} = 3.3 ± 0.3V)

Symbol	Parameter	Min.	Max.	Unit
C_{IN1}	Input Capacitance: CLK	2.0	4.0	pF
C_{IN2}	Input Capacitance:All other input pins	1.5	4.0	pF
CI/O	Data Input/Output Capacitance: DQ's	4.0	6.0	pF

THERMAL RESISTANCE (At T_A = 0 to +25°C, V_{DD} = V_{DDQ} = 3.3 ± 0.3V)

Package	Substrate	Theta-ja (Airflow = 0m/s)	Theta-ja (Airflow = 1m/s)	Theta-ja (Airflow = 2m/s)	Theta-jc	Units
Alloy42 TSOP2 (54)	4-layer	74.6	67.4	63.5	12.3	C/W
Copper TSOP2 (54)	4-layer	50.2	44.9	42.3	10.8	C/W
BGA (54)	4-layer	41.3	37.4	35.1	11.3	C/W

DC ELECTRICAL CHARACTERISTICS 1[1,3] (Recommended Operation Conditions unless otherwise noted.)

Symbol	Parameter	Test Condition	-6	-7	Unit
I_{DD1} [1]	Operating Current	One bank active, CL = 3, BL = 1, $t_{CLK} = t_{CLK}$ (min), $t_{RC} = t_{RC}$ (min)	100	90	mA
I_{DD2P}	Precharge Standby Current (In Power-Down Mode)4	CKE ≤ V_{IL} (MAX), t_{CK} = 15ns	4	4	mA
I_{DD2PS}	Precharge Standby Current (In Power-Down Mode)	CKE ≤ V_{IL} (MAX), CLK ≤ V_{IL} (MAX)	4	4	mA
I_{DD2N} [2]	Precharge Standby Current (In Non Power-Down Mode)	$\overline{CS}$ ≥ Vcc - 0.2V, CKE ≥ V_{IH} (MIN) t_{CK} = 15ns	25	25	mA
I_{DD2NS}	Precharge Standby Current (In Non Power-Down Mode)	$\overline{CS}$ ≥ Vcc - 0.2V, CKE ≥ V_{IH} (MIN) or CKE ≤ V_{IL} (MAX), All inputs stable	15	15	mA
I_{DD3P}	Active Standby Current (Power-Down Mode)	CKE ≤ V_{IL} (MAX), t_{CK} = 15ns	8	8	mA
I_{DD3PS}	Active Standby Current (Power-Down Mode)	CKE ≤ V_{IL} (MAX), CLK ≤ V_{IL} (MAX)	8	8	mA
I_{DD3N} [2]	Active Standby Current (In Non Power-Down Mode)	$\overline{CS}$ ≥ Vcc - 0.2V, CKE ≥ V_{IH} (MIN) t_{CK} = 15ns	30	30	mA
I_{DD3NS}	Active Standby Current (In Non Power-Down Mode)	$\overline{CS}$ ≥ Vcc - 0.2V, CKE ≥ V_{IH} (MIN) or CKE ≤ V_{IL} (MAX), All inputs stable	20	20	mA
I_{DD4}	Operating Current	All banks active, BL = 4, CL = 3, $t_{CK} = t_{CK}$ (min)	140	120	mA
I_{DD5}	Auto-Refresh Current	$t_{RC} = t_{RC}$ (min), $t_{CLK} = t_{CLK}$ (min)	100	85	mA
I_{DD6}	Self-Refresh Current	CKE ≤ 0.2V	5	5	mA

Notes:

1. I_{DD} (MAX) is specified at the output open condition.
2. Input signals are changed one time during 30ns.
3. For A2 temperature grade with T_A > 85°C: I_{DD1}, I_{DD3P}, I_{DD3PS}, and I_{DD4} are derated to 10% above these values; I_{DD2P}, I_{DD2PS}, and I_{DD6} are derated to 25% above these values.

DC ELECTRICAL CHARACTERISTICS 2 (Recommended Operation Conditions unless otherwise noted.)

Symbol	Parameter	Test Condition	Min	Max	Unit
I_{IL}	Input Leakage Current	0V ≤ Vin ≤ Vcc, with pins other than the tested pin at 0V	-5	5	μA
I_{OL}	Output Leakage Current	Output is disabled, 0V ≤ Vout ≤ Vcc,	-5	5	μA
V_{OH}	Output High Voltage Level	I_{OH} = -2mA	2.4	—	V
V_{OL}	Output Low Voltage Level	I_{OL} = 2mA	—	0.4	V

AC ELECTRICAL CHARACTERISTICS (1,2,3)

			-6		-7		
Symbol	**Parameter**		**Min.**	**Max.**	**Min.**	**Max.**	**Units**
t_{CK3}	Clock Cycle Time	$\overline{CAS}$ Latency = 3	6	—	7	—	ns
t_{CK2}		$\overline{CAS}$ Latency = 2	10	—	7.5	—	ns
t_{AC3}	Access Time From CLK	$\overline{CAS}$ Latency = 3	—	5.4	—	5.4	ns
t_{AC2}		$\overline{CAS}$ Latency = 2	—	5.4	—	5.4	ns
t_{CH}	CLK HIGH Level Width		2.5	—	2.5	—	ns
t_{CL}	CLK LOW Level Width		2.5	—	2.5	—	ns
t_{OH3}	Output Data Hold Time	$\overline{CAS}$ Latency = 3	2.5	—	2.5	—	ns
t_{OH2}		$\overline{CAS}$ Latency = 2	2.5	—	2.5	—	ns
t_{LZ}	Output LOW Impedance Time		0	—	0	—	ns
t_{HZ3}	Output HIGH Impedance Time	$\overline{CAS}$ Latency = 3	2.5	5.4	2.5	5.4	ns
t_{HZ2}		$\overline{CAS}$ Latency = 2	2.5	5.4	2.5	5.4	ns
t_{DS}	Input Data Setup Time(2)		1.5	—	1.5	—	ns
t_{DH}	Input Data Hold Time(2)		0.8	—	0.8	—	ns
t_{AS}	Address Setup Time(2)		1.5	—	1.5	—	ns
t_{AH}	Address Hold Time(2)		0.8	—	0.8	—	ns
t_{CKS}	CKE Setup Time(2)		1.5	—	1.5	—	ns
t_{CKH}	CKE Hold Time(2)		0.8	—	0.8	—	ns
t_{CMS}	Command Setup Time ($\overline{CS}$, $\overline{RAS}$, $\overline{CAS}$, $\overline{WE}$, DQM)(2)		1.5	—	1.5	—	ns
t_{CMH}	Command Hold Time ($\overline{CS}$, $\overline{RAS}$, $\overline{CAS}$, $\overline{WE}$, DQM)(2)		0.8	—	0.8	—	ns
t_{RC}	Command Period (REF to REF / ACT to ACT)		60	—	60	—	ns
t_{RAS}	Command Period (ACT to PRE)		42	100K	37	100K	ns
t_{RP}	Command Period (PRE to ACT)		18	—	15	—	ns
t_{RCD}	Active Command To Read / Write Command Delay Time		18	—	15	—	ns
t_{RRD}	Command Period (ACT [0] to ACT[1])		12	—	14	—	ns
t_{DPL}	Input Data To Precharge Command Delay time		12	—	14	—	ns
t_{DAL}	Input Data To Active / Refresh Command Delay time (During Auto-Precharge)		30	—	30	—	ns
t_{MRD}	Mode Register Program Time		12	—	14	—	ns
t_{DDE}	Power Down Exit Setup Time		6	—	7	—	ns
t_{XSR}	Exit Self-Refresh to Active Time (4)		66	—	70	—	ns
t_T	Transition Time		0.3	1.2	0.3	1.2	ns
t_{REF}	Refresh Cycle Time (8192)						
		$T_A \leq 70^oC$ Com., Ind., A1, A2	—	64	—	64	ms
		$T_A \leq 85^o$ C Ind., A1, A2	—	64	—	64	ms
		$T_A > 85^oC$ A2	—	32	—	32	ms

Notes:
1. The power-on sequence must be executed before starting memory operation.
2. Measured with t_T = 1 ns. If clock rising time is longer than 1ns, (t_T /2 - 0.5) ns should be added to the parameter.
3. The reference level is 1.4V when measuring input signal timing. Rise and fall times are measured between V_{IH}(min.) and V_{IL}(max).
4. Self-Refresh Mode is not supported for A2 grade with Ta > 85°C

OPERATING FREQUENCY / LATENCY RELATIONSHIPS

SYMBOL	PARAMETER		-6	-7	UNITS
t_{CK}	Clock Cycle Time	$\overline{CAS}$ Latency = 3	6	7	ns
		$\overline{CAS}$ Latency = 2	10	7.5	
Freq.	Operating Frequency	$\overline{CAS}$ Latency = 3	166	143	MHz
		$\overline{CAS}$ Latency = 2	100	133	
t_{RCD}	Active Command To Read/Write Command Delay Time	$\overline{CAS}$ Latency = 3	3	3	cycle
		$\overline{CAS}$ Latency = 2	2	2	
t_{RAC}	$\overline{RAS}$ Latency (t_{RCD} + t_{CAC})	$\overline{CAS}$ Latency = 3	6	6	cycle
		$\overline{CAS}$ Latency = 2	4	4	
t_{RC}	Command Period (REF to REF / ACT to ACT)	$\overline{CAS}$ Latency = 3	10	9	cycle
		$\overline{CAS}$ Latency = 2	6	8	
t_{RAS}	Command Period (ACT to PRE)	$\overline{CAS}$ Latency = 3	7	6	cycle
		$\overline{CAS}$ Latency = 2	5	5	
t_{RP}	Command Period (PRE to ACT)	$\overline{CAS}$ Latency = 3	3	3	cycle
		$\overline{CAS}$ Latency = 2	2	2	
t_{RRD}	Command Period (ACT[0] to ACT [1])		2	2	cycle
t_{CCD}	Column Command Delay Time (READ, READA, WRIT, WRITA)		1	1	cycle
t_{DPL}	Input Data To Precharge Command Delay Time		2	2	cycle
t_{DAL}	Input Data To Active/Refresh Command Delay Time (During Auto-Precharge)	$\overline{CAS}$ Latency = 3	5	5	cycle
		$\overline{CAS}$ Latency = 2	4	4	
t_{RBD}	Burst Stop Command To Output in HIGH-Z Delay Time (Read)	$\overline{CAS}$ Latency = 3	3	3	cycle
		$\overline{CAS}$ Latency = 2	2	2	
t_{WBD}	Burst Stop Command To Input in Invalid Delay Time (Write)		0	0	cycle
t_{RQL}	Precharge Command To Output in HIGH-Z Delay Time (Read)	$\overline{CAS}$ Latency = 3	3	3	cycle
		$\overline{CAS}$ Latency = 2	2	2	
t_{WDL}	Precharge Command To Input in Invalid Delay Time (Write)		0	0	cycle
t_{PQL}	Last Output To Auto-Precharge Start Time (Read)	$\overline{CAS}$ Latency = 3	-2	-2	cycle
		$\overline{CAS}$ Latency = 2	-1	-1	
t_{QMD}	DQM To Output Delay Time (Read)		2	2	cycle
t_{DMD}	DQM To Input Delay Time (Write)		0	0	cycle
t_{MRD}	Mode Register Set To Command Delay Time		2	2	cycle

Note: The number of clock cycles shown in this table are examples based on t_{CK} values in this table and the timing limits from AC Electrical Characteristics table.

AC TEST CONDITIONS

Input Load

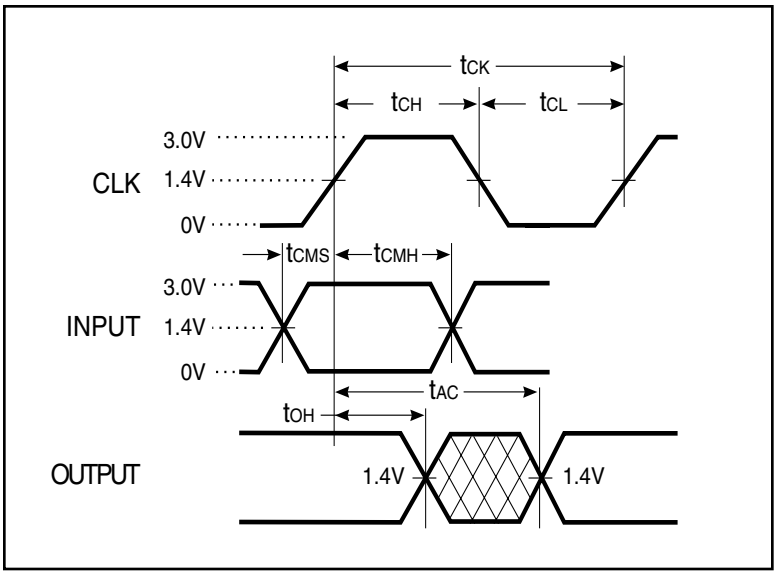

Output Load

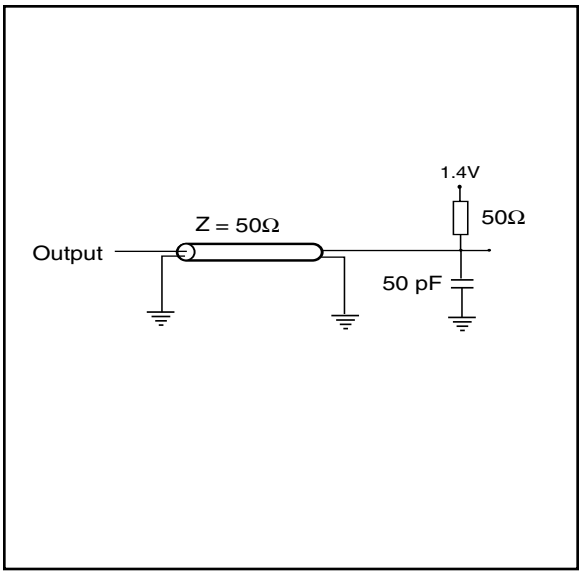

AC TEST CONDITIONS

Parameter	Rating
AC Input Levels	0V to 3.0V
Input Rise and Fall Times	1 ns
Input Timing Reference Level	1.4V
Output Timing Measurement Reference Level	1.4V

FUNCTIONAL DESCRIPTION

The 256Mb SDRAMs are quad-bank DRAMs which operate at 3.3V and include a synchronous interface (all signals are registered on the positive edge of the clock signal, CLK). Each of the 67,108,864-bit banks is organized as 8,192 rows by 512 columns by 16 bits or 8,192 rows by 1,024 columns by 8 bits.

Read and write accesses to the SDRAM are burst oriented; accesses start at a selected location and continue for a programmed number of locations in a programmed sequence. Accesses begin with the registration of an ACTIVE command which is then followed by a READ or WRITE command. The address bits registered coincident with the ACTIVE command are used to select the bank and row to be accessed (BA0 and BA1 select the bank, A0-A12 select the row). The address bits A0-A9 (x8); A0-A8 (x16) registered coincident with the READ or WRITE command are used to select the starting column location for the burst access.

Prior to normal operation, the SDRAM must be initialized. The following sections provide detailed information covering device initialization, register definition, command descriptions and device operation.

Initialization

SDRAMs must be powered up and initialized in a predefined manner.

The 256Mb SDRAM is initialized after the power is applied to V_{DD} and V_{DDQ} (simultaneously) and the clock is stable with CKE High.

A 100µs delay is required prior to issuing any command other than a COMMAND INHIBIT or a NOP. The COMMAND INHIBIT or NOP may be applied during the 200us period and should continue at least through the end of the period.

With at least one COMMAND INHIBIT or NOP command having been applied, a PRECHARGE command should be applied once the 100µs delay has been satisfied. All banks must be precharged. This will leave all banks in an idle state after which at least two AUTO REFRESH cycles must be performed. After the AUTO REFRESH cycles are complete, the SDRAM is then ready for mode register programming.

The mode register should be loaded prior to applying any operational command because it will power up in an unknown state.

INITIALIZE AND LOAD MODE REGISTER(1)

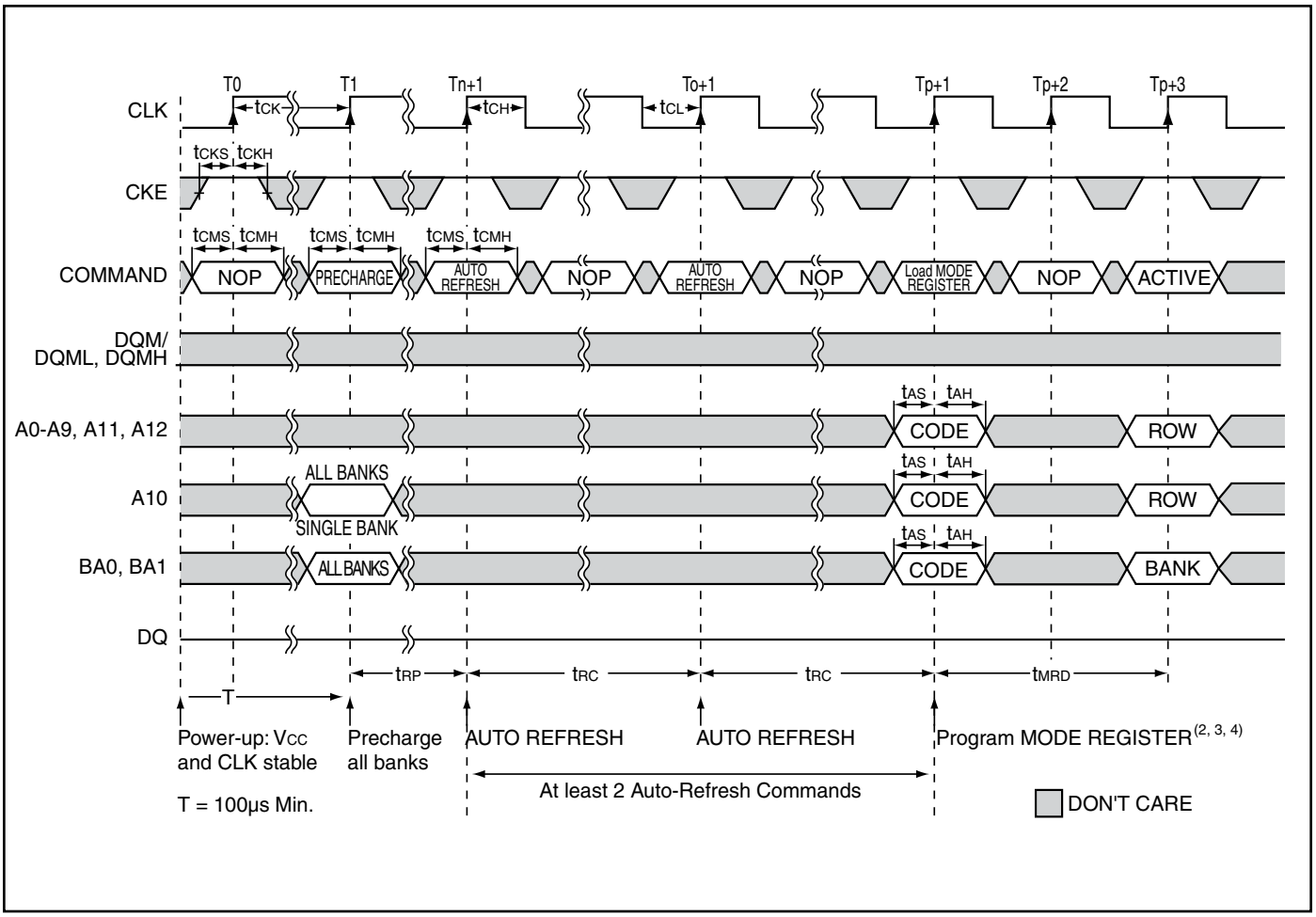

Notes:
1. If $\overline{CS}$ is High at clock High time, all commands applied are NOP.
2. The Mode register may be loaded prior to the Auto-Refresh cycles if desired.
3. JEDEC and PC100 specify three clocks.
4. Outputs are guaranteed High-Z after the command is issued.

AUTO-REFRESH CYCLE

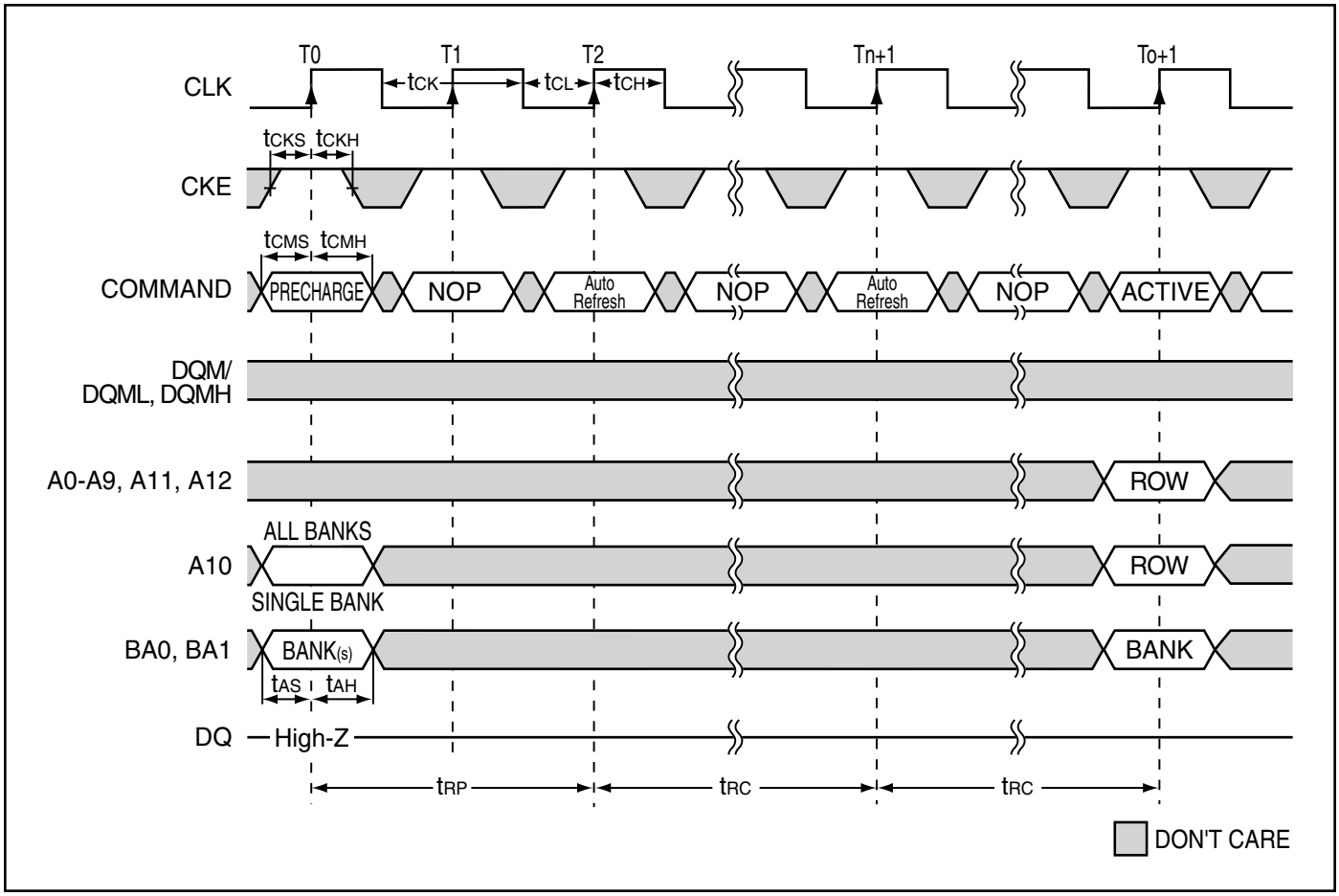

Notes:
1. $\overline{CAS}$ latency = 2, 3

SELF-REFRESH CYCLE

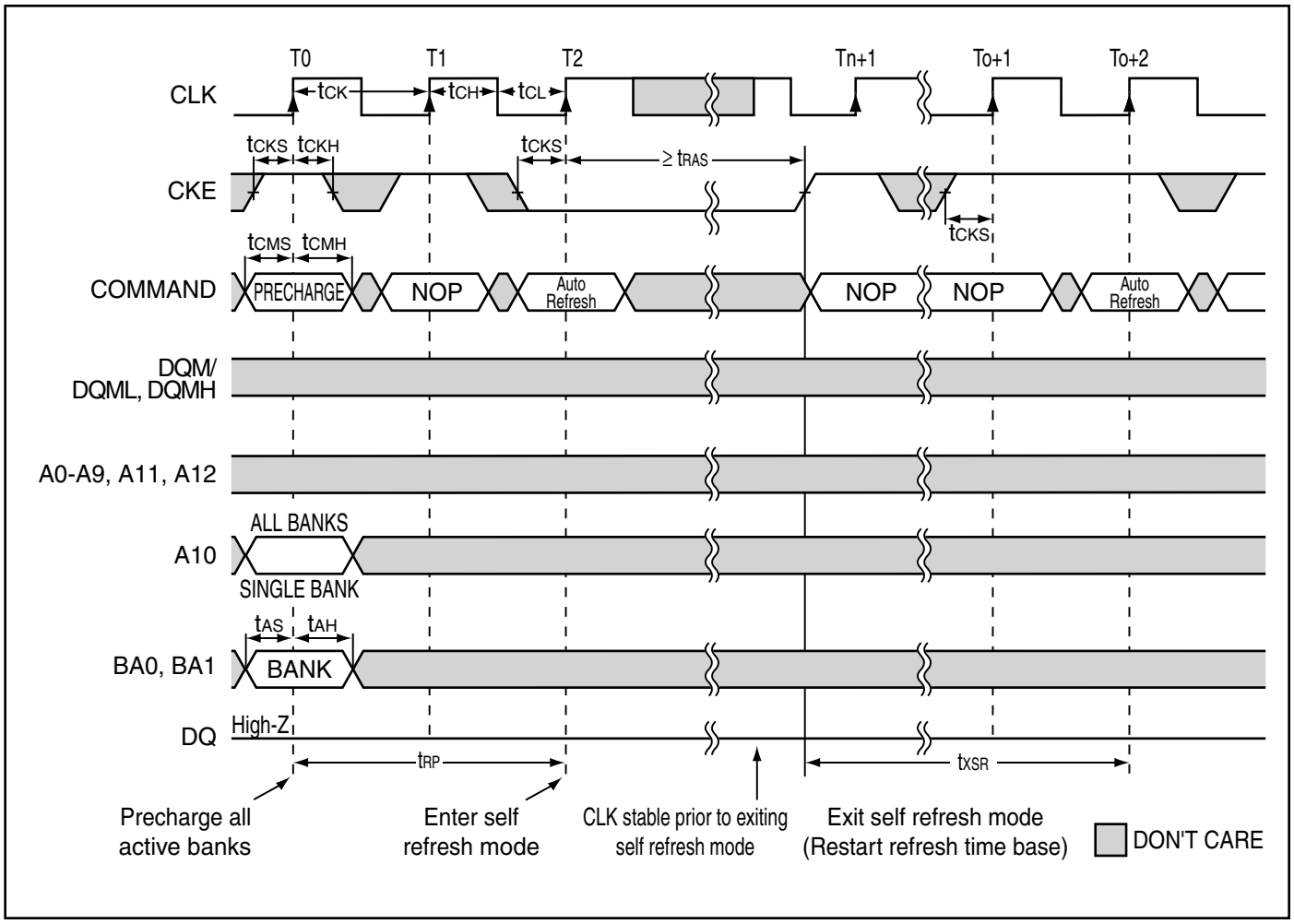

Notes:
1. Self-Refresh Mode is not supported for A2 grade with Ta > 85°C.

REGISTER DEFINITION

Mode Register

The mode register is used to define the specific mode of operation of the SDRAM. This definition includes the selection of a burst length, a burst type, a CAS latency, an operating mode and a write burst mode, as shown in MODE REGISTER DEFINITION.

The mode register is programmed via the LOAD MODE REGISTER command and will retain the stored information until it is programmed again or the device loses power.

Mode register bits M0-M2 specify the burst length, M3 specifies the type of burst (sequential or interleaved), M4- M6 specify the CAS latency, M7 and M8 specify the operating mode, M9 specifies the WRITE burst mode, and M10, M11, and M12 are reserved for future use.

The mode register must be loaded when all banks are idle, and the controller must wait the specified time before initiating the subsequent operation. Violating either of these requirements will result in unspecified operation.

MODE REGISTER DEFINITION

BA1	BA0	A12	A11	A10	A9	A8	A7	A6	A5	A4	A3	A2	A1	A0	Address Bus (Ax)
															Mode Register (Mx)

Reserved[1]

Burst Length

M2	M1	M0	M3=0	M3=1
0	0	0	1	1
0	0	1	2	2
0	1	0	4	4
0	1	1	8	8
1	0	0	Reserved	Reserved
1	0	1	Reserved	Reserved
1	1	0	Reserved	Reserved
1	1	1	Full Page	Reserved

Burst Type

M3	Type
0	Sequential
1	Interleaved

Latency Mode

M6	M5	M4	CAS Latency
0	0	0	Reserved
0	0	1	Reserved
0	1	0	2
0	1	1	3
1	0	0	Reserved
1	0	1	Reserved
1	1	0	Reserved
1	1	1	Reserved

Operating Mode

M8	M7	M6-M0	Mode
0	0	Defined	Standard Operation
—	—	—	All Other States Reserved

Write Burst Mode

M9	Mode
0	Programmed Burst Length
1	Single Location Access

1. To ensure compatibility with future devices, should program BA1, BA0, A12, A11, A10 = "0"

BURST LENGTH

Read and write accesses to the SDRAM are burst oriented, with the burst length being programmable, as shown in MODE REGISTER DEFINITION. The burst length determines the maximum number of column locations that can be accessed for a given READ or WRITE command. Burst lengths of 1, 2, 4 or 8 locations are available for both the sequential and the interleaved burst types, and a full-page burst is available for the sequential type. The full-page burst is used in conjunction with the BURST TERMINATE command to generate arbitrary burst lengths.

Reserved states should not be used, as unknown operation or incompatibility with future versions may result.

When a READ or WRITE command is issued, a block of columns equal to the burst length is effectively selected. All accesses for that burst take place within this block, meaning that the burst will wrap within the block if a boundary is reached. The block is uniquely selected by A1-A8 (x16) or A1-A9 (x8) when the burst length is set to two; by A2-A8 (x16) or A2-A9 (x8) when the burst length is set to four; and by A3-A8 (x16) or A3-A9 (x8) when the burst length is set to eight. The remaining (least significant) address bit(s) is (are) used to select the starting location within the block. Full-page bursts wrap within the page if the boundary is reached.

Burst Type

Accesses within a given burst may be programmed to be either sequential or interleaved; this is referred to as the burst type and is selected via bit M3.

The ordering of accesses within a burst is determined by the burst length, the burst type and the starting column address, as shown in BURST DEFINITION table.

BURST DEFINITION

Burst Length	Starting Column Address			Order of Accesses Within a Burst	
				Type = Sequential	Type = Interleaved
			A 0		
2			0	0-1	0-1
			1	1-0	1-0
		A 1	**A 0**		
		0	0	0-1-2-3	0-1-2-3
4		0	1	1-2-3-0	1-0-3-2
		1	0	2-3-0-1	2-3-0-1
		1	1	3-0-1-2	3-2-1-0
	A 2	**A 1**	**A 0**		
	0	0	0	0-1-2-3-4-5-6-7	0-1-2-3-4-5-6-7
	0	0	1	1-2-3-4-5-6-7-0	1-0-3-2-5-4-7-6
	0	1	0	2-3-4-5-6-7-0-1	2-3-0-1-6-7-4-5
8	0	1	1	3-4-5-6-7-0-1-2	3-2-1-0-7-6-5-4
	1	0	0	4-5-6-7-0-1-2-3	4-5-6-7-0-1-2-3
	1	0	1	5-6-7-0-1-2-3-4	5-4-7-6-1-0-3-2
	1	1	0	6-7-0-1-2-3-4-5	6-7-4-5-2-3-0-1
	1	1	1	7-0-1-2-3-4-5-6	7-6-5-4-3-2-1-0
Full Page (y)	n = A0-A8 (x16) n = A0-A9 (x8) (location 0-y)			Cn, Cn + 1, Cn + 2 Cn + 3, Cn + 4... …Cn - 1, Cn…	Not Supported

CAS Latency

The CAS latency is the delay, in clock cycles, between the registration of a READ command and the availability of the first piece of output data. The latency can be set to two or three clocks.

If a READ command is registered at clock edge n, and the latency is *m* clocks, the data will be available by clock edge *n* + m. The DQs will start driving as a result of the clock edge one cycle earlier *(n + m* - 1), and provided that the relevant access times are met, the data will be valid by clock edge *n* + m. For example, assuming that the clock cycle time is such that all relevant access times are met, if a READ command is registered at T0 and the latency is programmed to two clocks, the DQs will start driving after T1 and the data will be valid by T2, as shown in CAS Latency diagrams. The Allowable Operating Frequency table indicates the operating frequencies at which each CAS latency setting can be used.

Reserved states should not be used as unknown operation or incompatibility with future versions may result.

Operating Mode

The normal operating mode is selected by setting M7 and M8 to zero; the other combinations of values for M7 and M8 are reserved for future use and/or test modes. The programmed burst length applies to both READ and WRITE bursts.

Test modes and reserved states should not be used because unknown operation or incompatibility with future versions may result.

Write Burst Mode

When M9 = 0, the burst length programmed via M0-M2 applies to both READ and WRITE bursts; when M9 = 1, the programmed burst length applies to READ bursts, but write accesses are single-location (nonburst) accesses.

CAS Latency

Allowable Operating Frequency (MHz)

Speed	CAS Latency = 2	CAS Latency = 3
-6	100	166
-7	133	143

CAS LATENCY

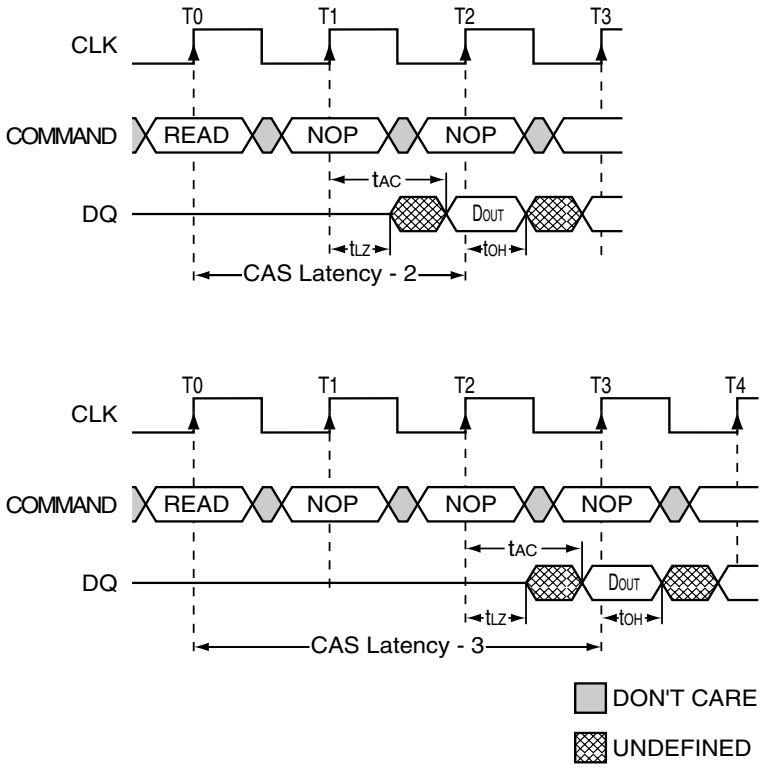

CHIP OPERATION

BANK/ROW ACTIVATION

Before any READ or WRITE commands can be issued to a bank within the SDRAM, a row in that bank must be "opened." This is accomplished via the ACTIVE command, which selects both the bank and the row to be activated (see Activating Specific Row Within Specific Bank).

After opening a row (issuing an ACTIVE command), a READ or WRITE command may be issued to that row, subject to the t_{RCD} specification. Minimum t_{RCD} should be divided by the clock period and rounded up to the next whole number to determine the earliest clock edge after the ACTIVE command on which a READ or WRITE command can be entered. For example, a t_{RCD} specification of 15ns with a 143 MHz clock (7ns period) results in 2.14 clocks, rounded to 3. This is reflected in the following example, which covers any case where $2 < [t_{RCD}\ (MIN)/t_{CK}] \leq 3$. (The same procedure is used to convert other specification limits from time units to clock cycles).

A subsequent ACTIVE command to a different row in the same bank can only be issued after the previous active row has been "closed" (precharged). The minimum time interval between successive ACTIVE commands to the same bank is defined by t_{RC}.

A subsequent ACTIVE command to another bank can be issued while the first bank is being accessed, which results in a reduction of total row-access overhead. The minimum time interval between successive ACTIVE commands to different banks is defined by t_{RRD}.

ACTIVATING SPECIFIC ROW WITHIN SPECIFIC BANK

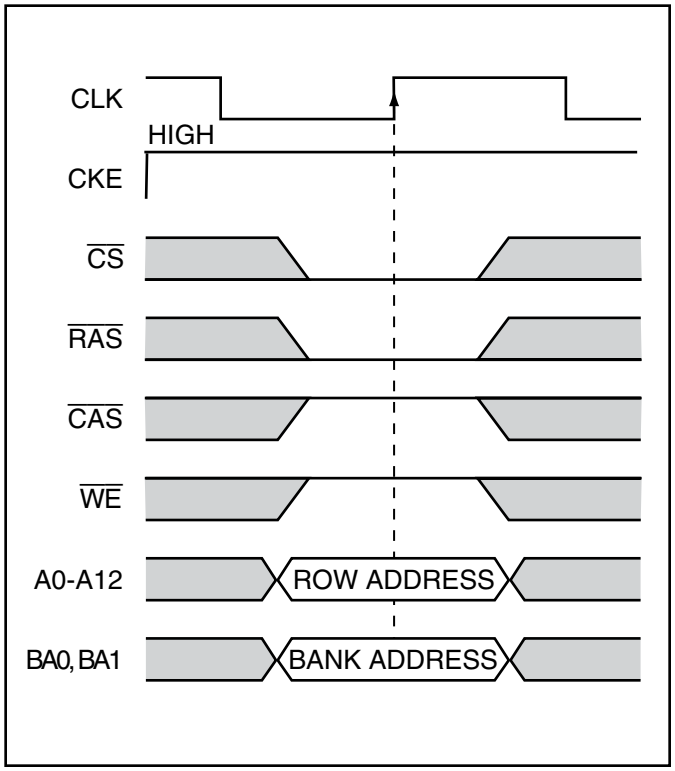

EXAMPLE: MEETING TRCD (MIN) WHEN 2 < [TRCD (MIN)/TCK] ≤ 3

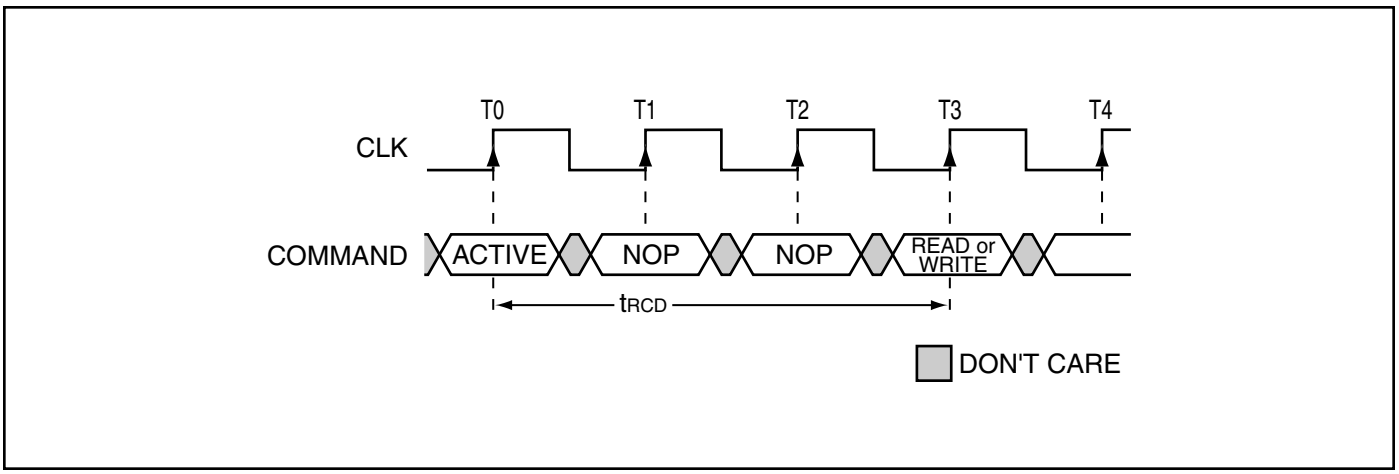

READS

READ bursts are initiated with a READ command, as shown in the READ COMMAND diagram.

The starting column and bank addresses are provided with the READ command, and auto precharge is either enabled or disabled for that burst access. If auto precharge is enabled, the row being accessed is precharged at the completion of the burst. For the generic READ commands used in the following illustrations, auto precharge is disabled.

During READ bursts, the valid data-out element from the starting column address will be available following the CAS latency after the READ command. Each subsequent data-out element will be valid by the next positive clock edge. The CAS Latency diagram shows general timing for each possible CAS latency setting.

Upon completion of a burst, assuming no other commands have been initiated, the DQs will go High-Z. A full-page burst will continue until terminated. (At the end of the page, it will wrap to column 0 and continue.)

Data from any READ burst may be truncated with a subsequent READ command, and data from a fixed-length READ burst may be immediately followed by data from a READ command. In either case, a continuous flow of data can be maintained. The first data element from the new burst follows either the last element of a completed burst or the last desired data element of a longer burst which is being truncated.

The new READ command should be issued *x* cycles before the clock edge at which the last desired data element is valid, where *x* equals the CAS latency minus one. This is shown in Consecutive READ Bursts for CAS latencies of two and three; data element *n* + 3 is either the last of a burst of four or the last desired of a longer burst. The 256Mb SDRAM uses a pipelined architecture and therefore does not require the *2n* rule associated with a prefetch architecture. A READ command can be initiated on any clock cycle following a previous READ command. Full-speed random read accesses can be performed to the same bank, as shown in Random READ Accesses, or each subsequent READ may be performed to a different bank.

Data from any READ burst may be truncated with a subsequent WRITE command, and data from a fixed-length READ burst may be immediately followed by data from a WRITE command (subject to bus turnaround limitations). The WRITE burst may be initiated on the clock edge immediately following the last (or last desired) data element from the READ burst, provided that I/O contention can be avoided. In a given system design, there may be a possibility that the device driving the input data will go Low-Z before the SDRAM DQs go High-Z. In this case, at least a single-cycle delay should occur between the last read data and the WRITE command.

READ COMMAND

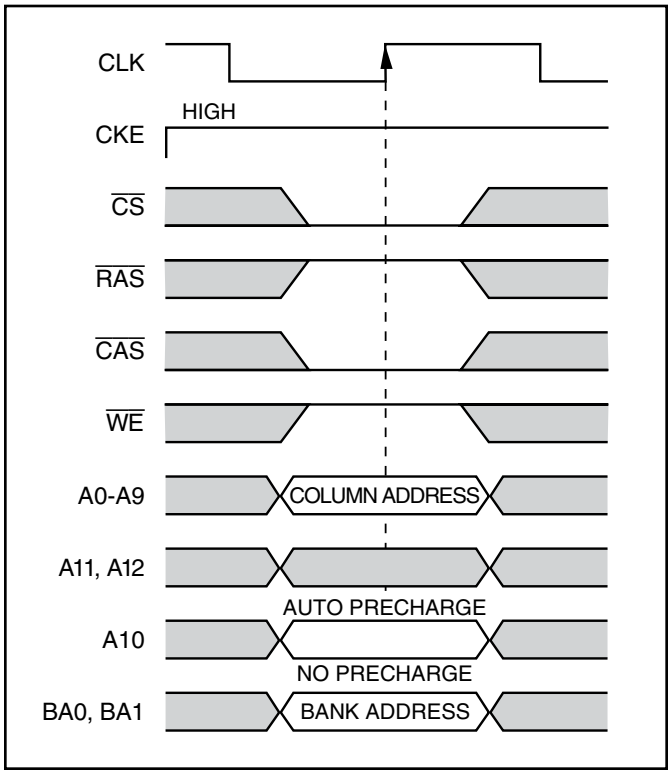

Note: A9 is "Don't Care" for x16.

The DQM input is used to avoid I/O contention, as shown in Figures RW1 and RW2. The DQM signal must be asserted (HIGH) at least three clocks prior to the WRITE command (DQM latency is two clocks for output buffers) to suppress data-out from the READ. Once the WRITE command is registered, the DQs will go High-Z (or remain High-Z), regardless of the state of the DQM signal, provided the DQM was active on the clock just prior to the WRITE command that truncated the READ command. If not, the second WRITE will be an invalid WRITE. For example, if DQM was LOW during T4 in Figure RW2, then the WRITEs at T5 and T7 would be valid, while the WRITE at T6 would be invalid.

The DQM signal must be de-asserted prior to the WRITE command (DQM latency is zero clocks for input buffers) to ensure that the written data is not masked.

A fixed-length READ burst may be followed by, or truncated with, a PRECHARGE command to the same bank (provided that auto precharge was not activated), and a full-page burst may be truncated with a PRECHARGE command to the same bank. The PRECHARGE command should be issued *x* cycles before the clock edge at which the last desired data element is valid, where *x* equals the CAS latency minus one. This is shown in the READ to PRECHARGE

diagram for each possible CAS latency; data element *n* + 3 is either the last of a burst of four or the last desired of a longer burst. Following the PRECHARGE command, a subsequent command to the same bank cannot be issued until t_{RP} is met. Note that part of the row precharge time is hidden during the access of the last data element(s).

In the case of a fixed-length burst being executed to completion, a PRECHARGE command issued at the optimum time (as described above) provides the same operation that would result from the same fixed-length burst with auto precharge. The disadvantage of the PRECHARGE command is that it requires that the command and address buses be available at the appropriate time to issue the command; the advantage of the PRECHARGE command is that it can be used to truncate fixed-length or full-page bursts.

Full-page READ bursts can be truncated with the BURST TERMINATE command, and fixed-length READ bursts may be truncated with a BURST TERMINATE command, provided that auto precharge was not activated. The BURST TERMINATE command should be issued *x* cycles before the clock edge at which the last desired data element is valid, where *x* equals the CAS latency minus one. This is shown in the READ Burst Termination diagram for each possible CAS latency; data element *n* + 3 is the last desired data element of a longer burst.

RW1 - READ to WRITE

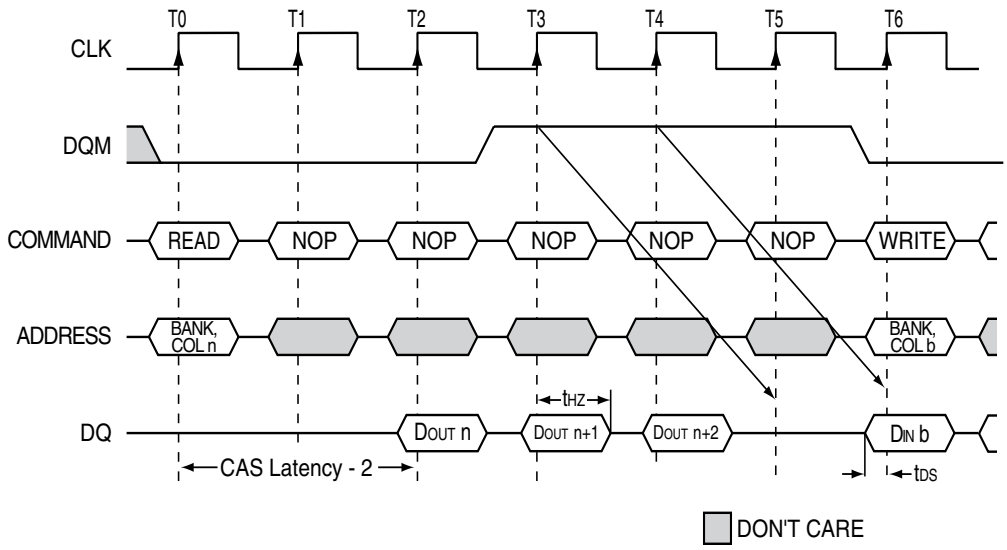

RW2 - READ to WRITE

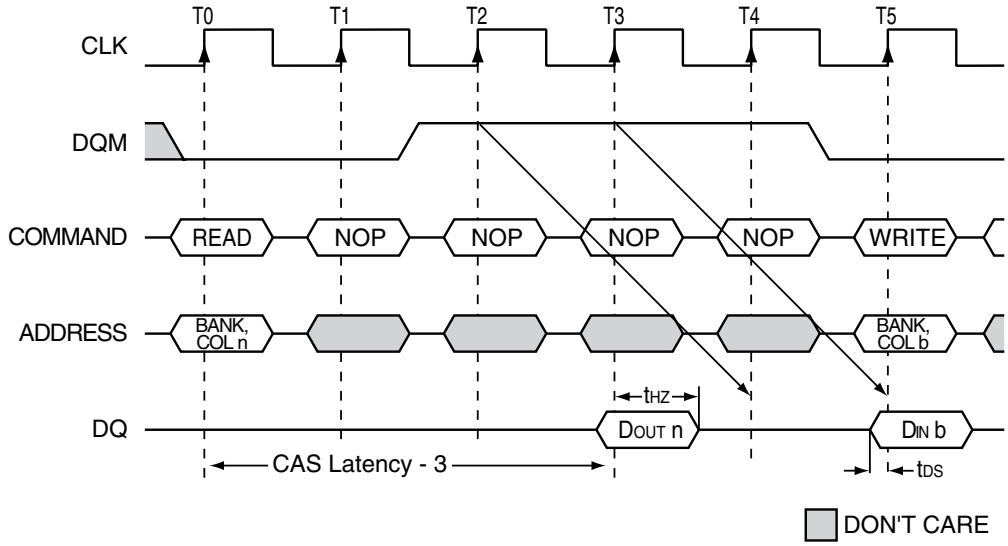

CONSECUTIVE READ BURSTS

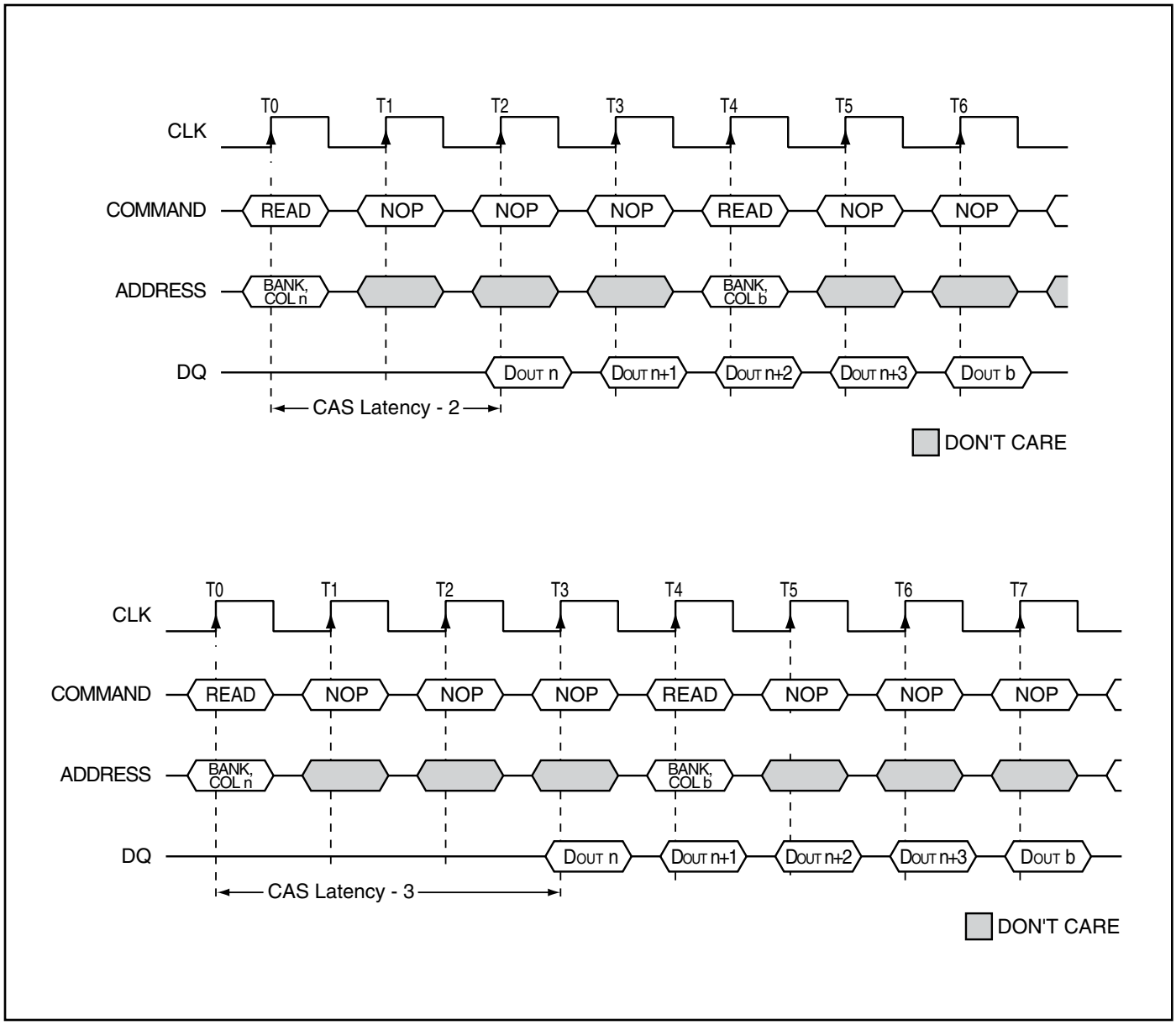

RANDOM READ ACCESSES

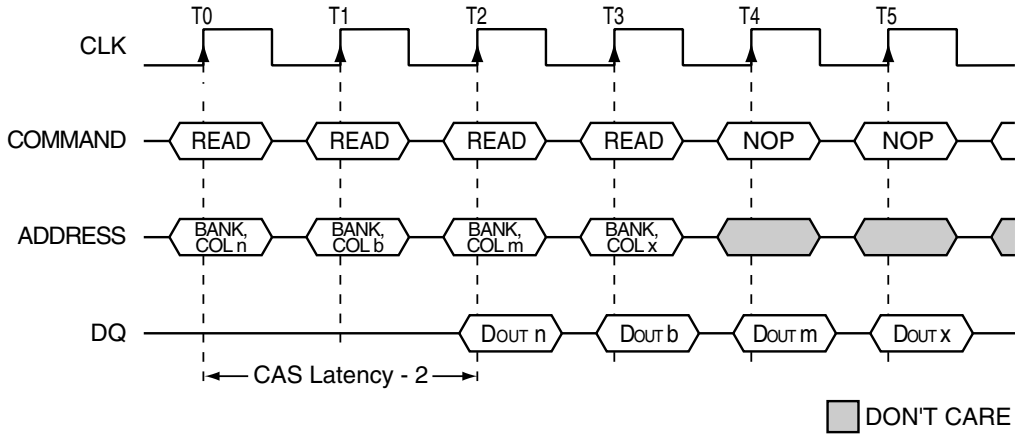

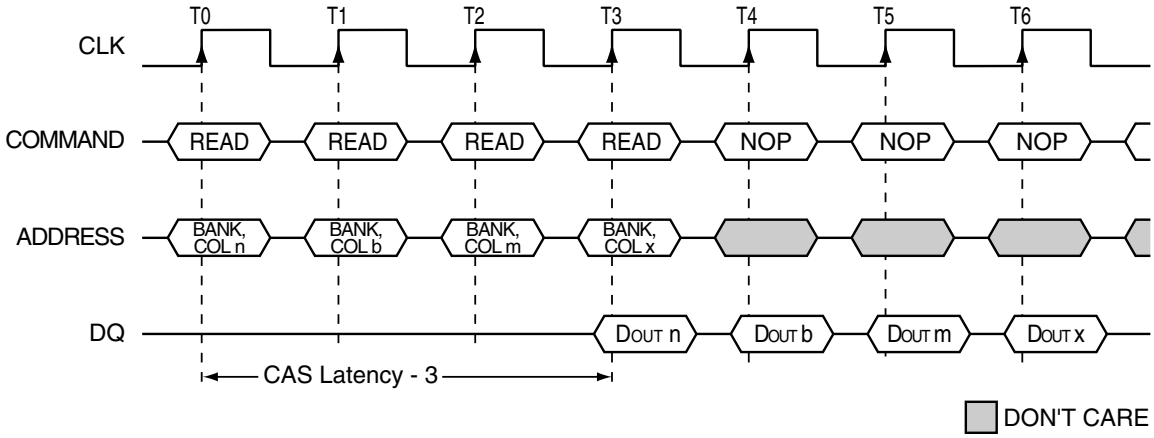

READ BURST TERMINATION

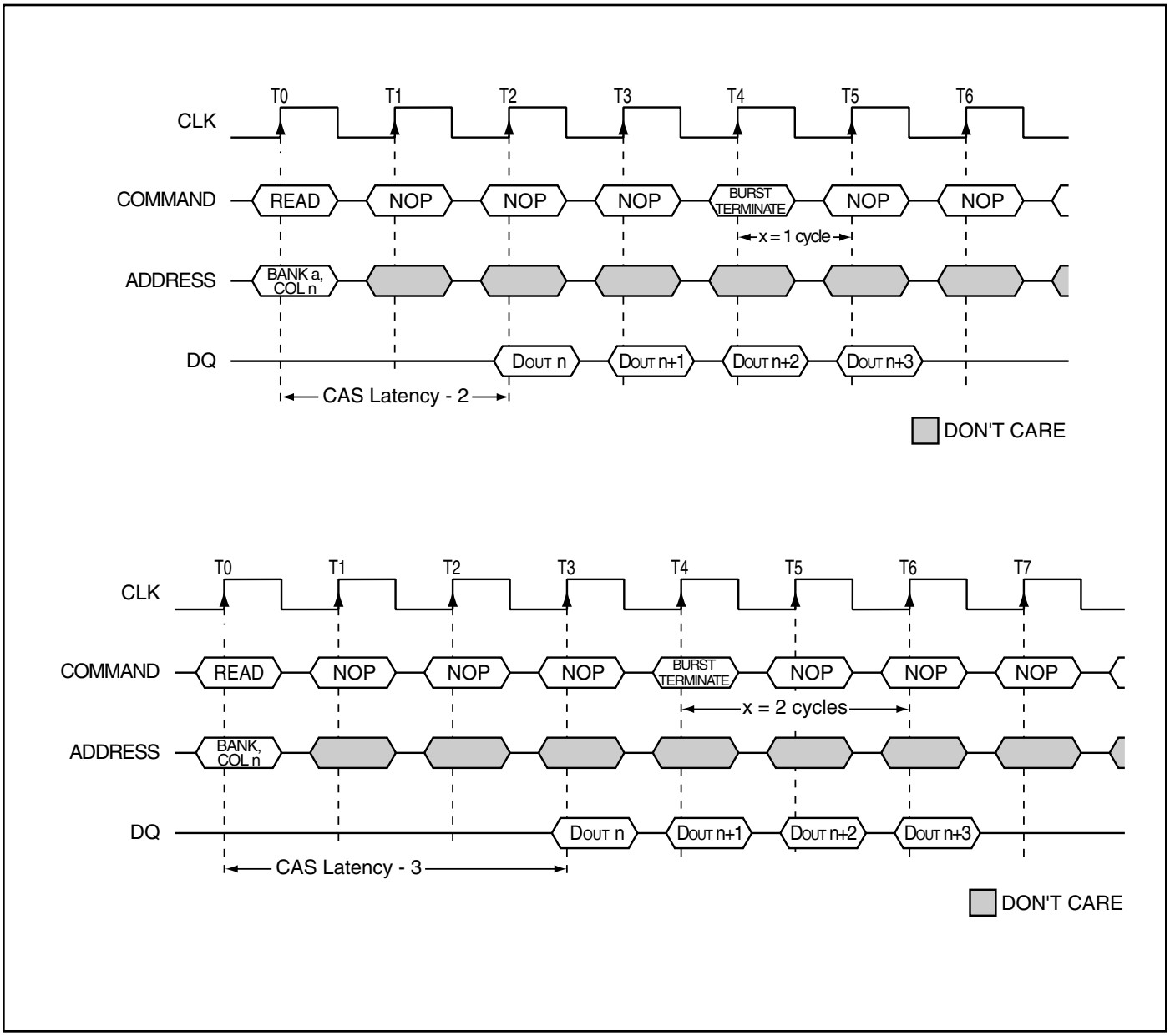

ALTERNATING BANK READ ACCESSES

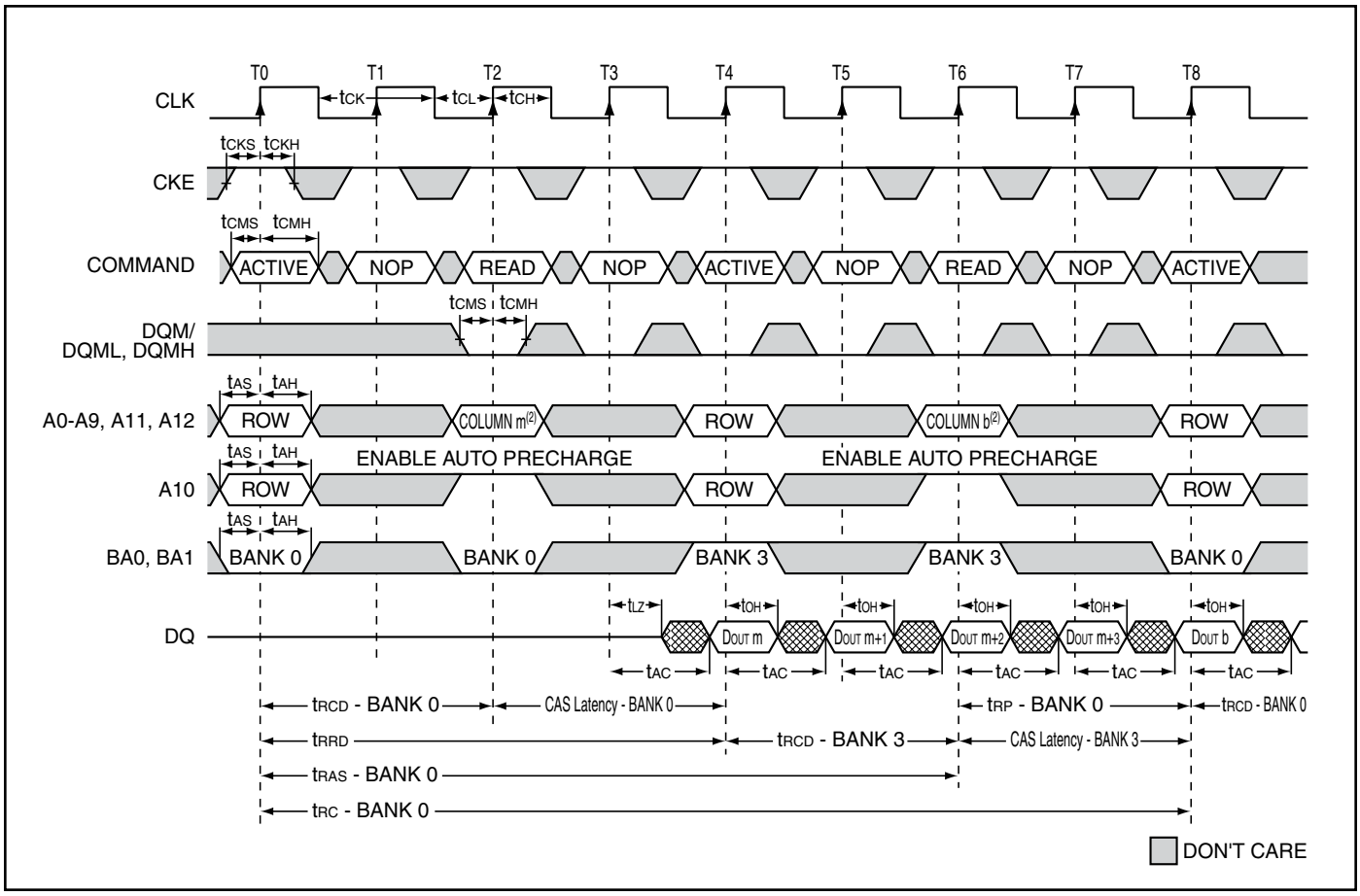

Notes:

1) $\overline{\text{CAS}}$ latency = 2, Burst Length = 4
2) x16: A9, A11, and A12 = "Don't Care"
   x8: A11 and A12 = "Don't Care"

READ - FULL-PAGE BURST

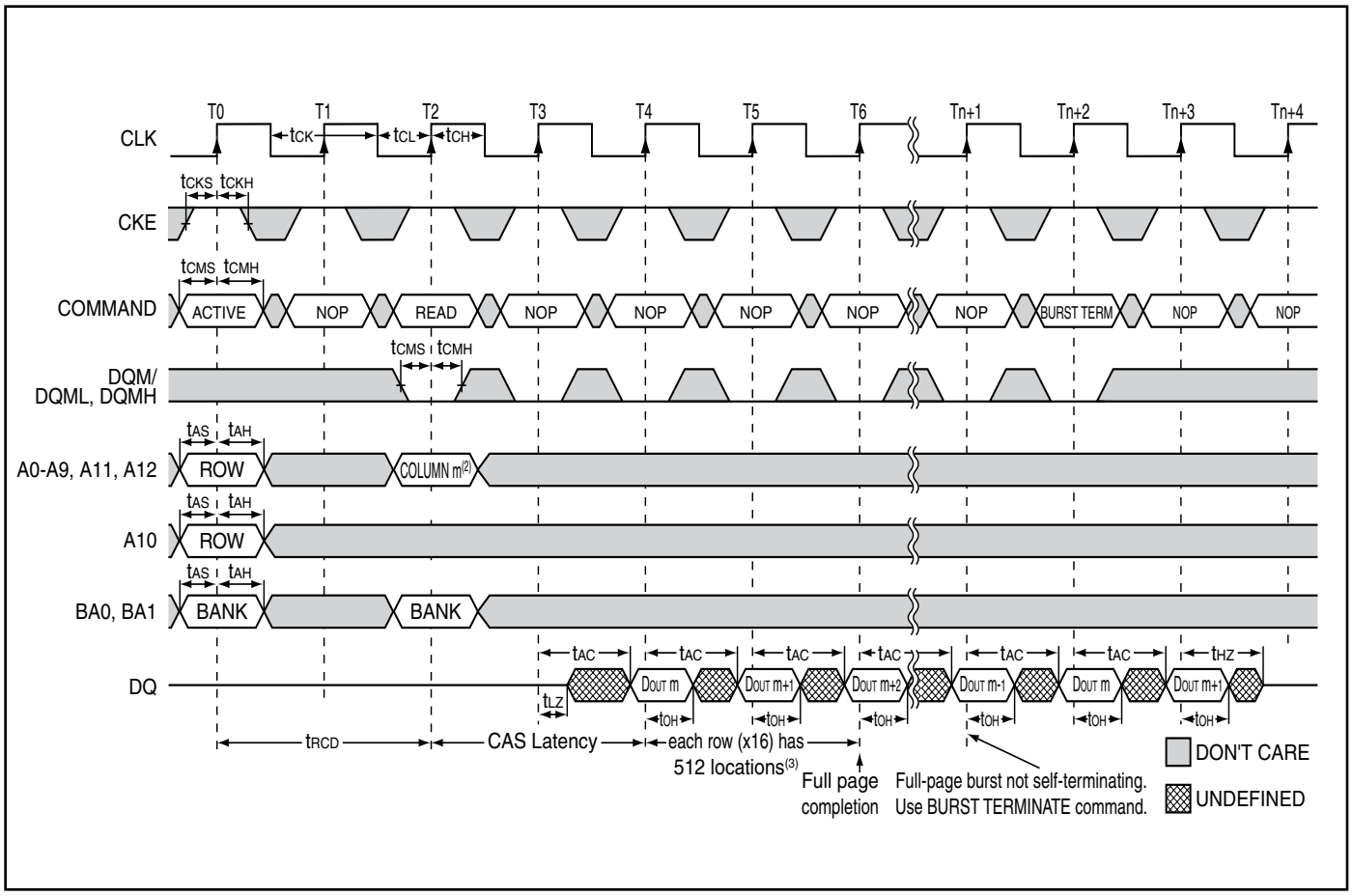

Notes:

1) $\overline{\text{CAS}}$ latency = 2, Burst Length = Full Page
2) x16: A9, A11, and A12 = "Don't Care"
   x8: A11 and A12 = "Don't Care"
3) x8: Each row has 1,024 locations.

READ - DQM OPERATION

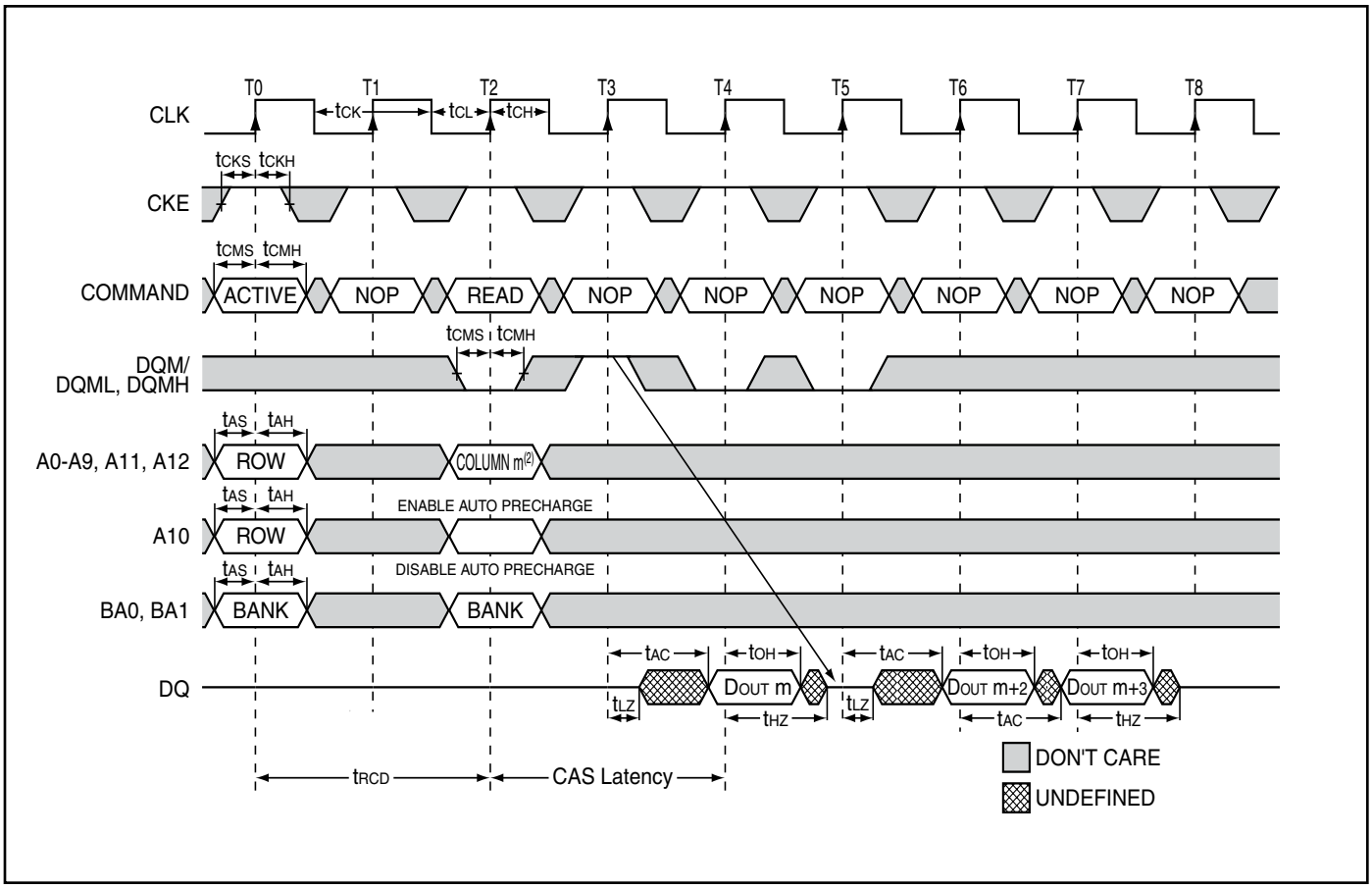

Notes:
1) $\overline{\text{CAS}}$ latency = 2, Burst Length = 4
2) x16: A9, A11, and A12 = "Don't Care"
   x8: A11 and A12 = "Don't Care"

READ to PRECHARGE

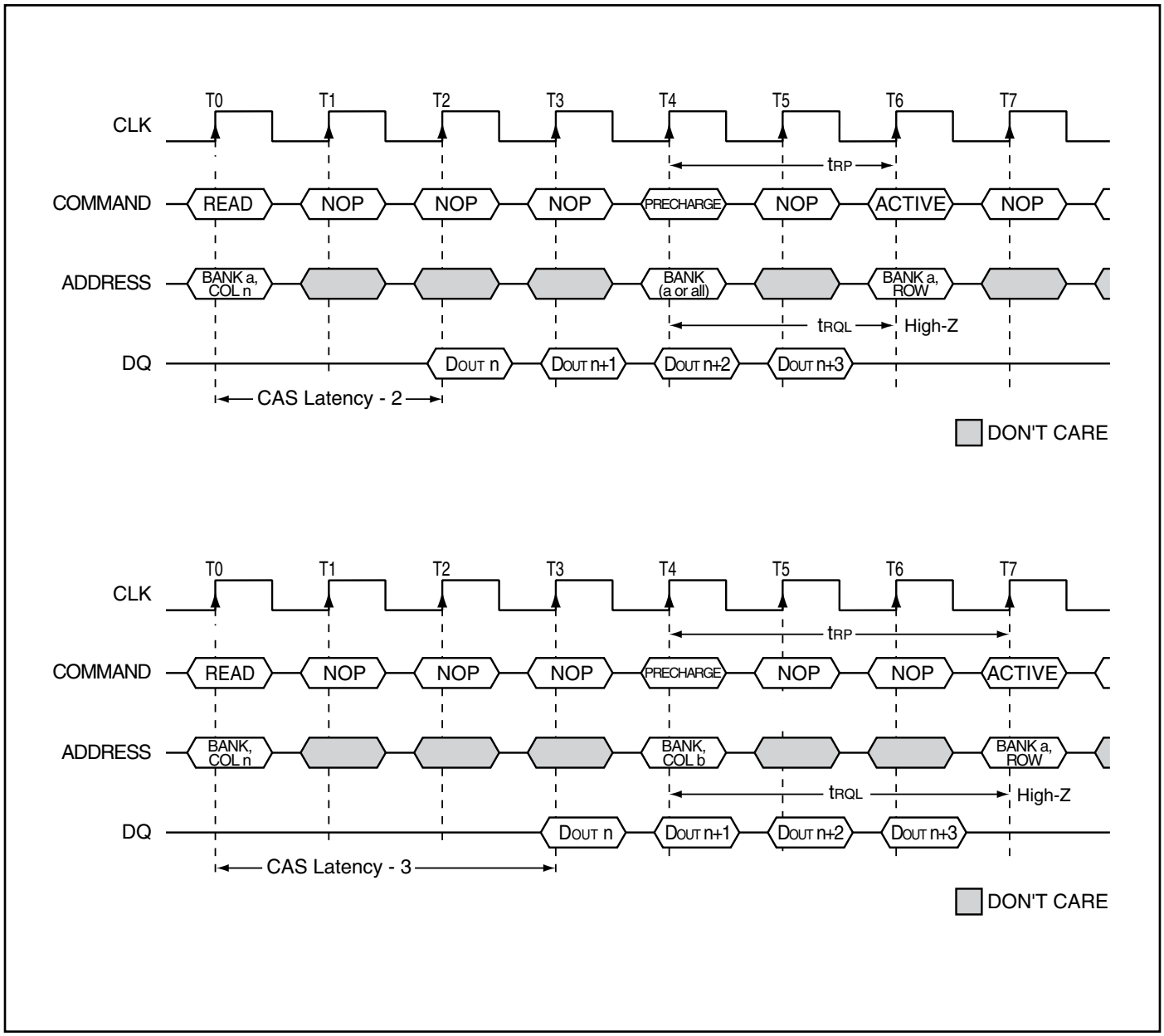

WRITES

WRITE bursts are initiated with a WRITE command, as shown in WRITE Command diagram.

WRITE COMMAND

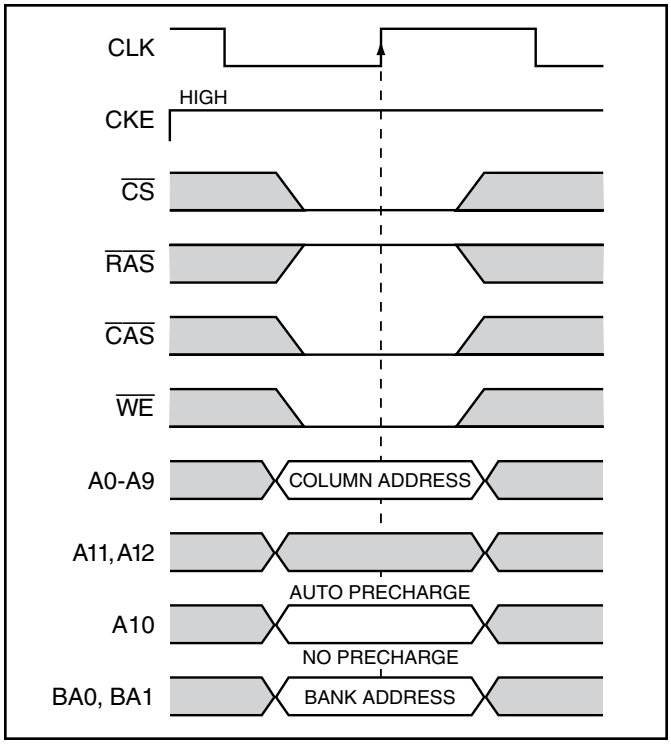

Note: A9 is "Don't Care" for x16.

The starting column and bank addresses are provided with the WRITE command, and auto precharge is either enabled or disabled for that access. If auto precharge is enabled, the row being accessed is precharged at the completion of the burst. For the generic WRITE commands used in the following illustrations, auto precharge is disabled.

During WRITE bursts, the first valid data-in element will be registered coincident with the WRITE command. Subsequent data elements will be registered on each successive positive clock edge. Upon completion of a fixed-length burst, assuming no other commands have been initiated, the DQs will remain High-Z and any additional input data will be ignored (see WRITE Burst). A full-page burst will continue until terminated. (At the end of the page, it will wrap to column 0 and continue.)

Data for any WRITE burst may be truncated with a subsequent WRITE command, and data for a fixed-length WRITE burst may be immediately followed by data for a WRITE command. The new WRITE command can be issued on any clock following the previous WRITE command, and the data provided coincident with the new command applies to the new command.

An example is shown in WRITE to WRITE diagram. Data *n* + 1 is either the last of a burst of two or the last desired of a longer burst. The 256Mb SDRAM uses a pipelined architecture and therefore does not require the *2n* rule associated with a prefetch architecture. A WRITE command can be initiated on any clock cycle following a previous WRITE command. Full-speed random write accesses within a page can be performed to the same bank, as shown in Random WRITE Cycles, or each subsequent WRITE may be performed to a different bank.

Data for any WRITE burst may be truncated with a subsequent READ command, and data for a fixed-length WRITE burst may be immediately followed by a subsequent READ command. Once the READ com mand is registered, the data inputs will be ignored, and WRITEs will not be executed. An example is shown in WRITE to READ. Data *n* + 1 is either the last of a burst of two or the last desired of a longer burst.

Data for a fixed-length WRITE burst may be followed by, or truncated with, a PRECHARGE command to the same bank (provided that auto precharge was not activated), and a full-page WRITE burst may be truncated with a PRECHARGE command to the same bank. The PRECHARGE command should be issued t_{DPL} after the clock edge at which the last desired input data element is registered. The auto precharge mode requires a t_{DPL} of at least one clock plus time, regardless of frequency. In addition, when truncating a WRITE burst, the DQM signal must be used to mask input data for the clock edge prior to, and the clock edge coincident with, the PRECHARGE command. An example is shown in the WRITE to PRECHARGE diagram. Data *n*+1 is either the last of a burst of two or the last desired of a longer burst. Following the PRECHARGE command, a subsequent command to the same bank cannot be issued until t_{RP} is met.

In the case of a fixed-length burst being executed to completion, a PRECHARGE command issued at the optimum time (as described above) provides the same operation that would result from the same fixed-length burst with auto precharge. The disadvantage of the PRECHARGE command is that it requires that the command and address buses be available at the appropriate time to issue the command; the advantage of the PRECHARGE command is that it can be used to truncate fixed-length or full-page bursts.

Fixed-length or full-page WRITE bursts can be truncated with the BURST TERMINATE command. When truncating a WRITE burst, the input data applied coincident with the BURST TERMINATE command will be ignored. The last data written (provided that DQM is LOW at that time) will be the input data applied one clock previous to the BURST TERMINATE command. This is shown in WRITE Burst Termination, where data *n* is the last desired data element of a longer burst.

WRITE BURST

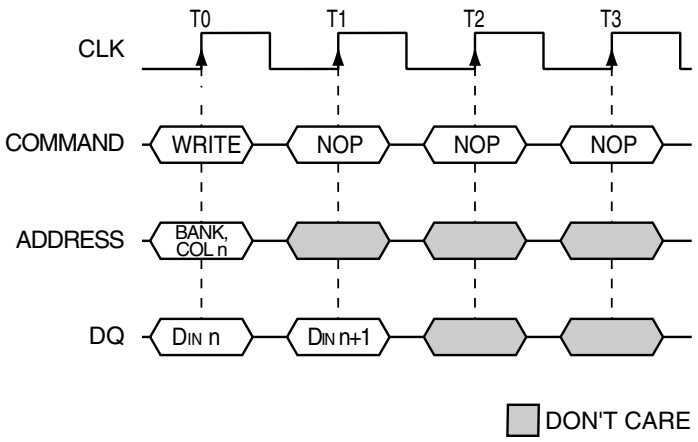

WRITE TO WRITE

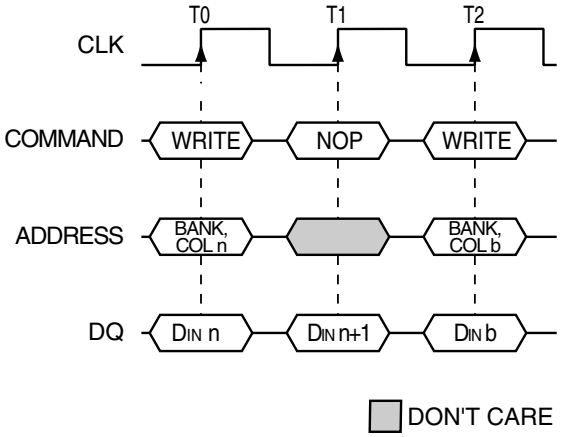

RANDOM WRITE CYCLES

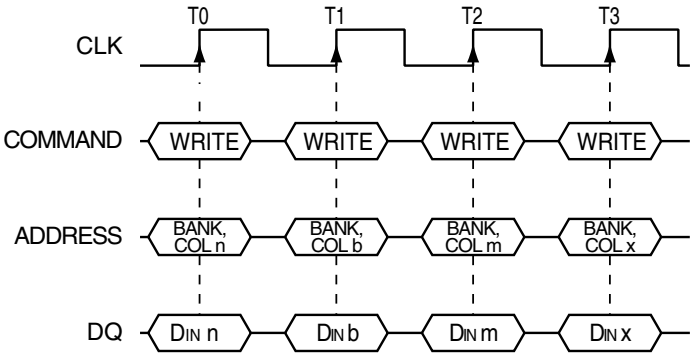

WRITE to READ

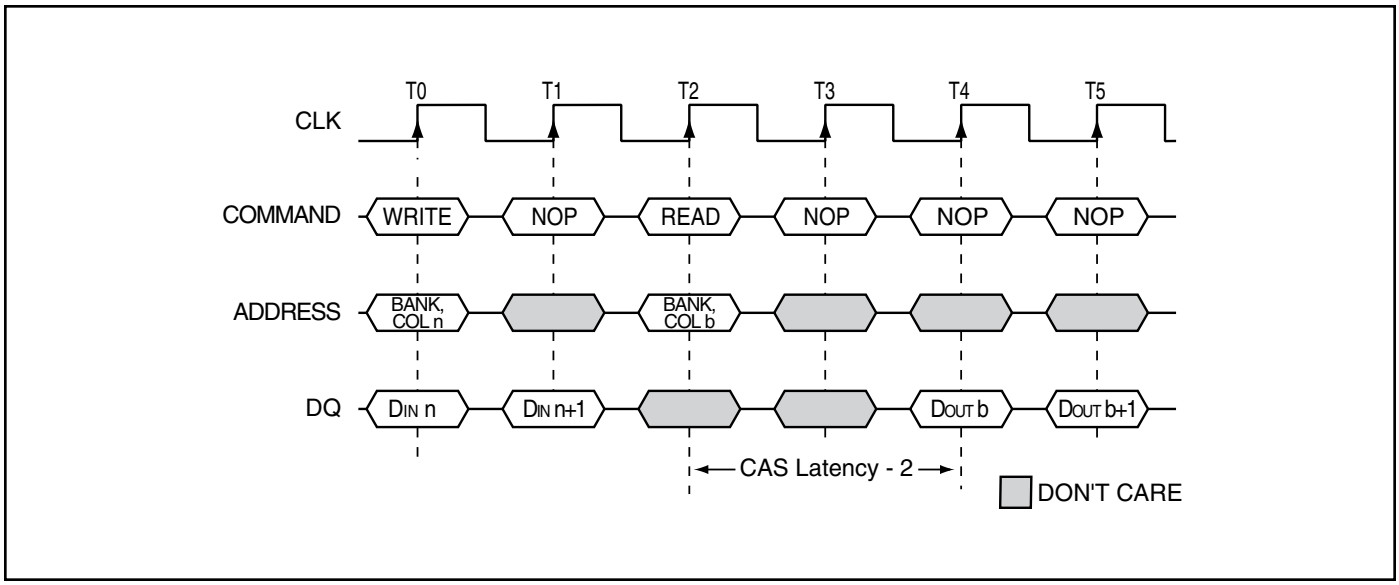

WP1 - WRITE to PRECHARGE

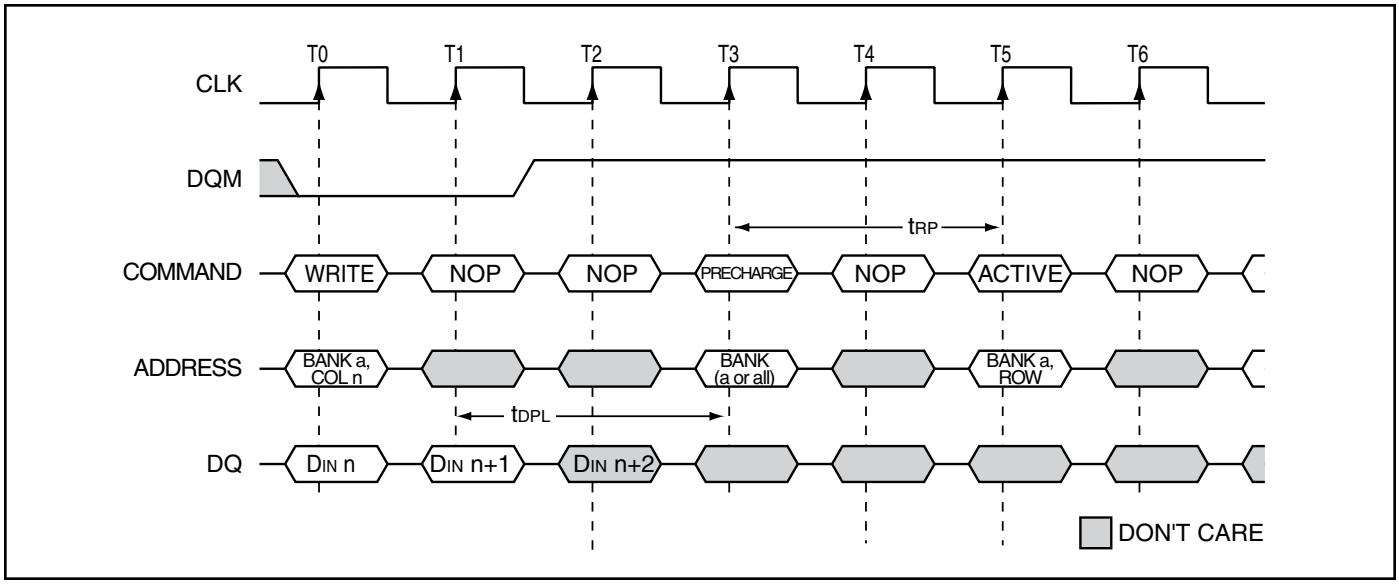

WP2 - WRITE to PRECHARGE

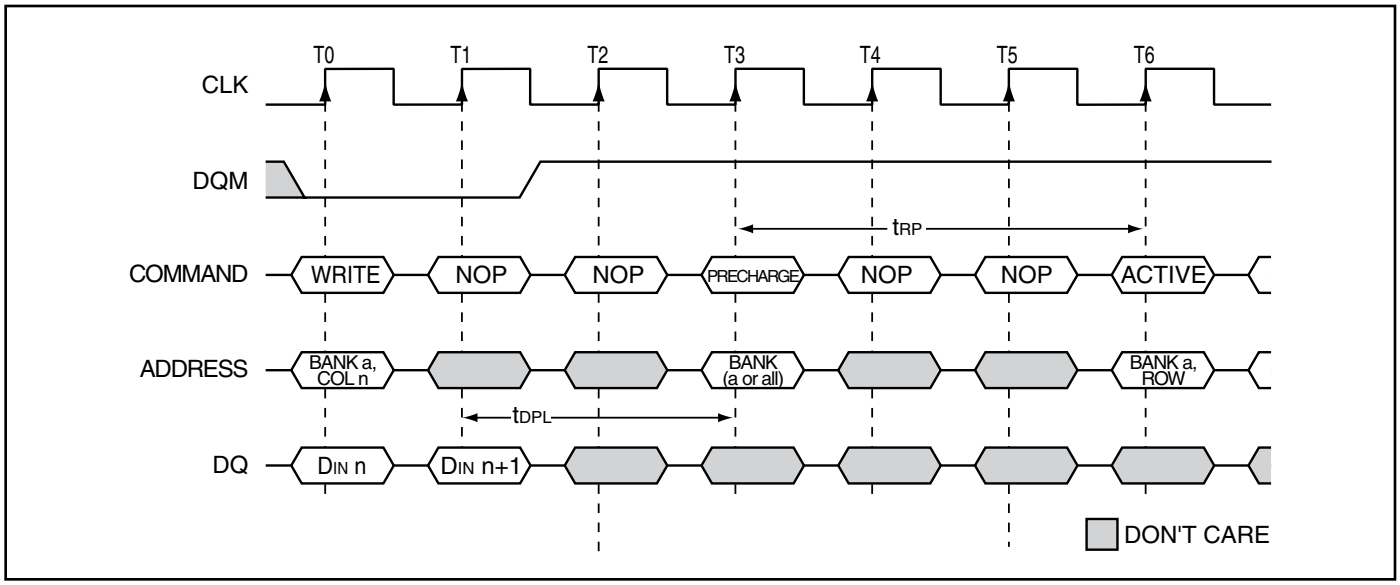

WRITE Burst Termination

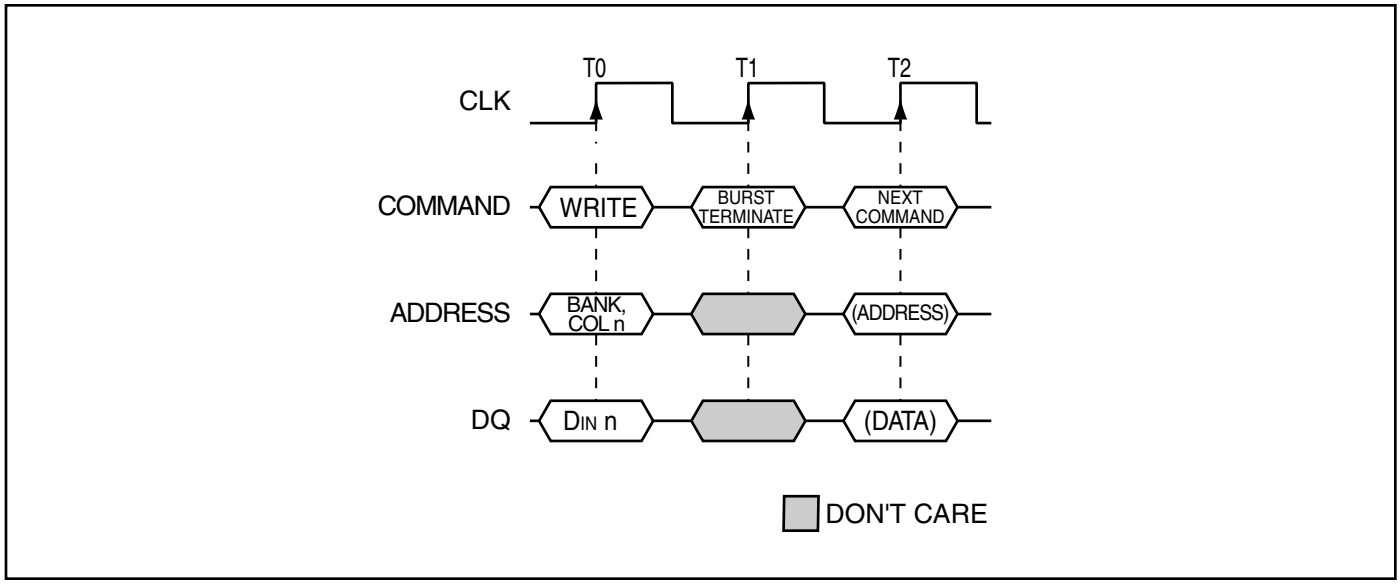

WRITE - FULL PAGE BURST

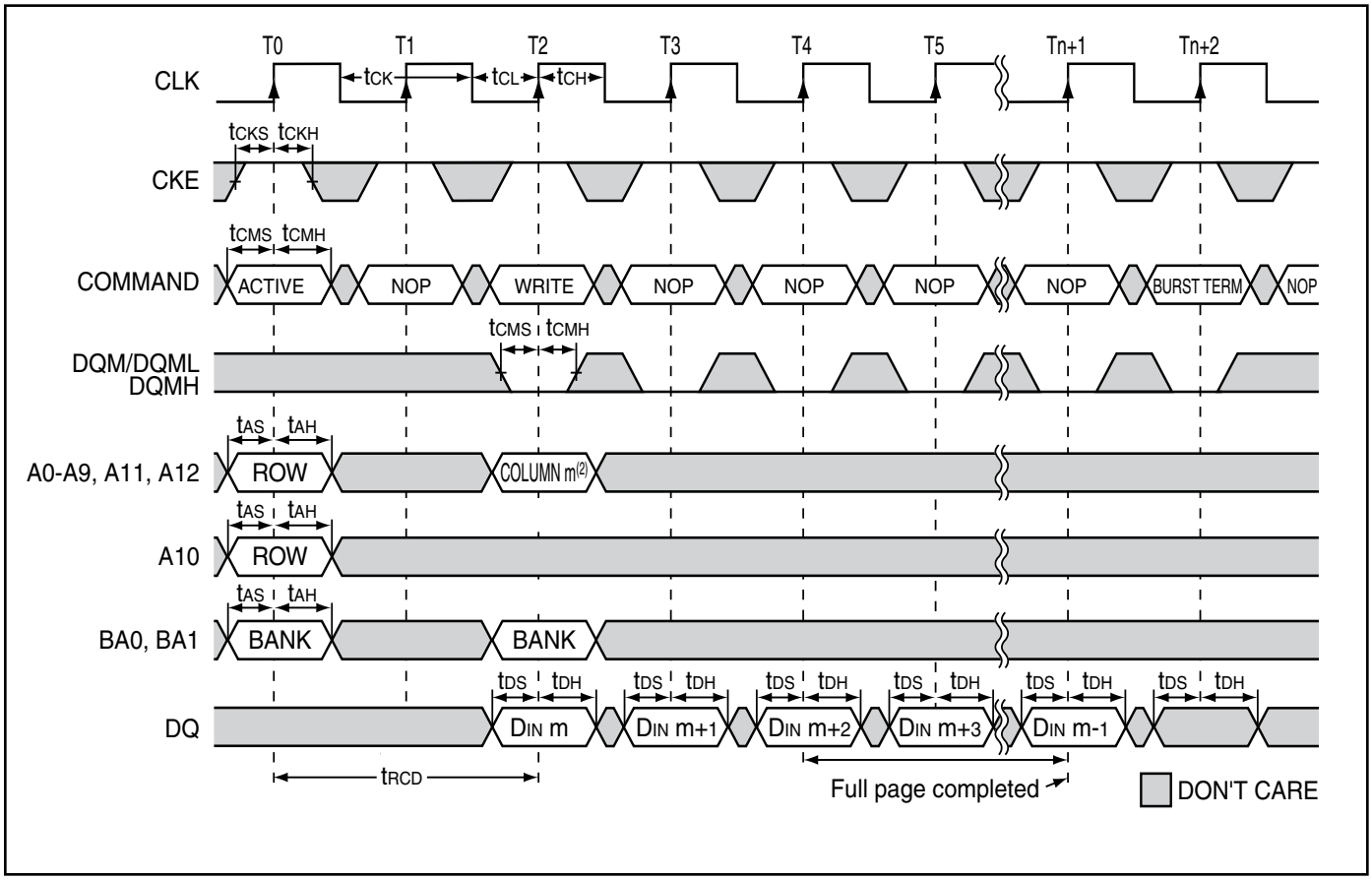

Notes:
1) Burst Length = Full Page
2) x16: A9, A11, and A12 = "Don't Care"
   x8: A11 and A12 = "Don't Care"

WRITE - DQM OPERATION

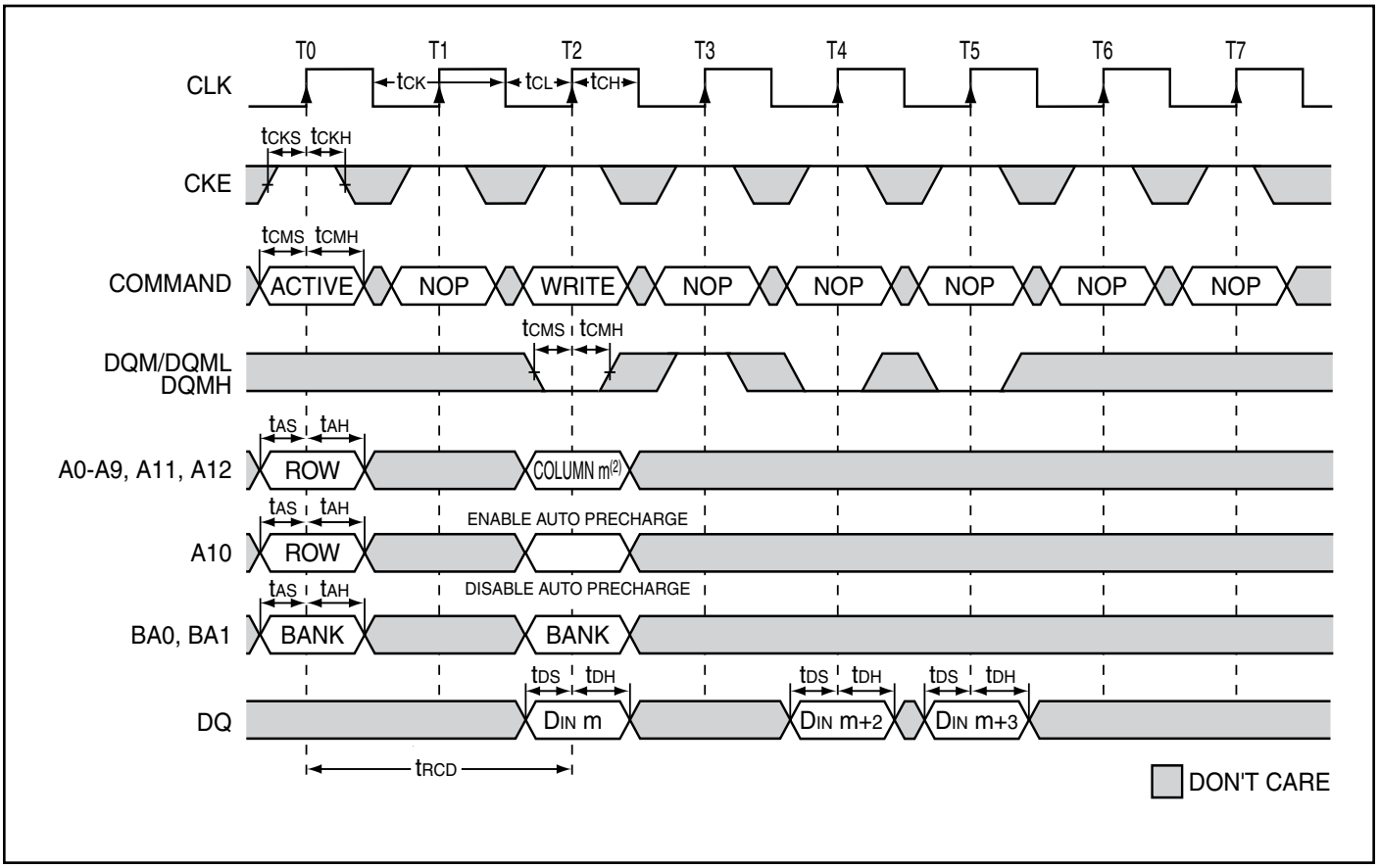

Notes:
1) Burst Length = 4
2) x16: A9, A11, and A12 = "Don't Care"
   x8: A11 and A12 = "Don't Care"

ALTERNATING BANK WRITE ACCESSES

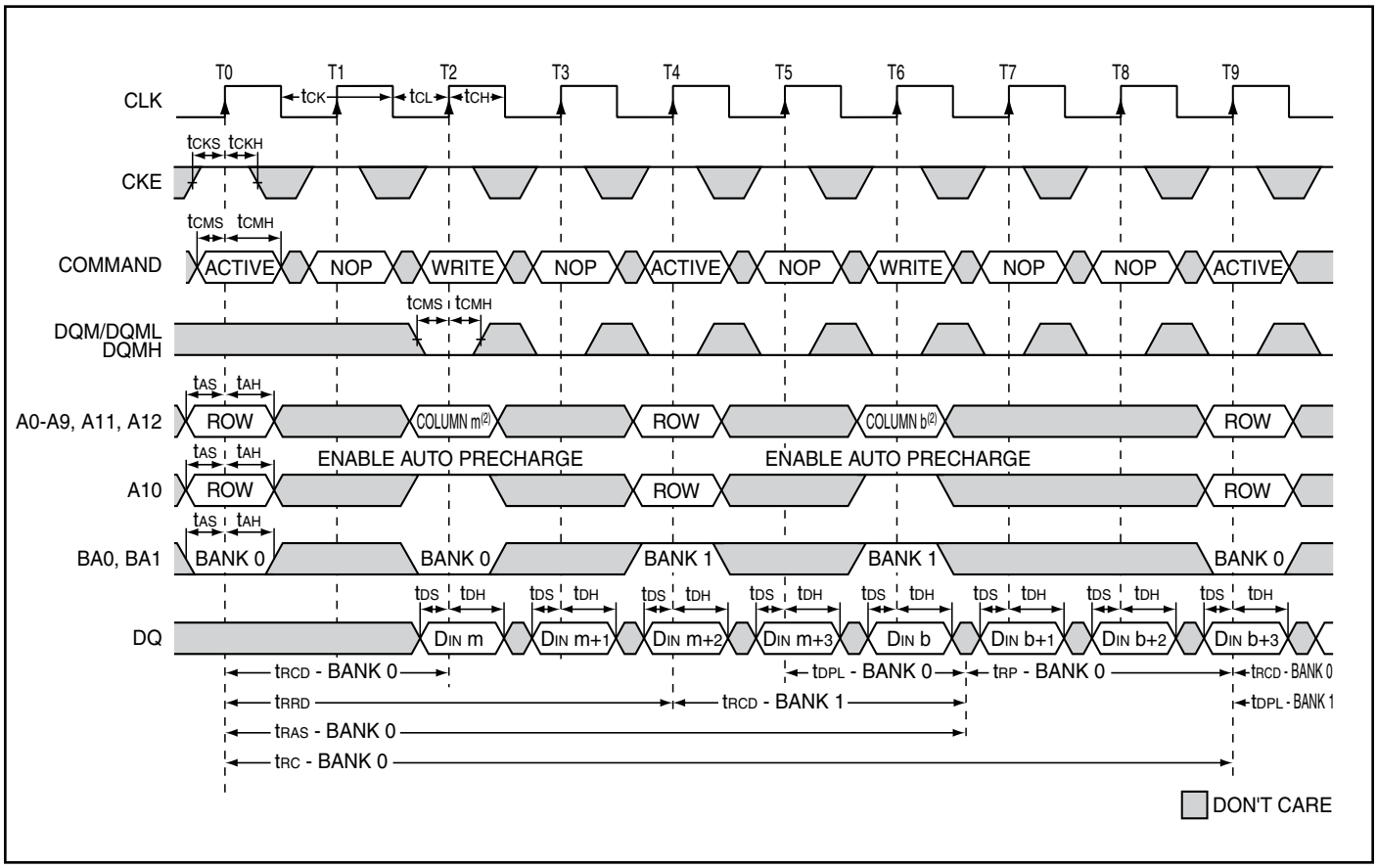

Notes:
1) Burst Length = 4
2) x16: A9, A11, and A12 = "Don't Care"
   x8: A11 and A12 = "Don't Care"

CLOCK SUSPEND

Clock suspend mode occurs when a column access/burst is in progress and CKE is registered LOW. In the clock suspend mode, the internal clock is deactivated, "freezing" the synchronous logic.

For each positive clock edge on which CKE is sampled LOW, the next internal positive clock edge is suspended. Any command or data present on the input pins at the time of a suspended internal clock edge is ignored; any data present on the DQ pins remains driven; and burst counters are not incremented, as long as the clock is suspended. (See following examples.)

Clock suspend mode is exited by registering CKE HIGH; the internal clock and related operation will resume on the subsequent positive clock edge.

Clock Suspend During WRITE Burst

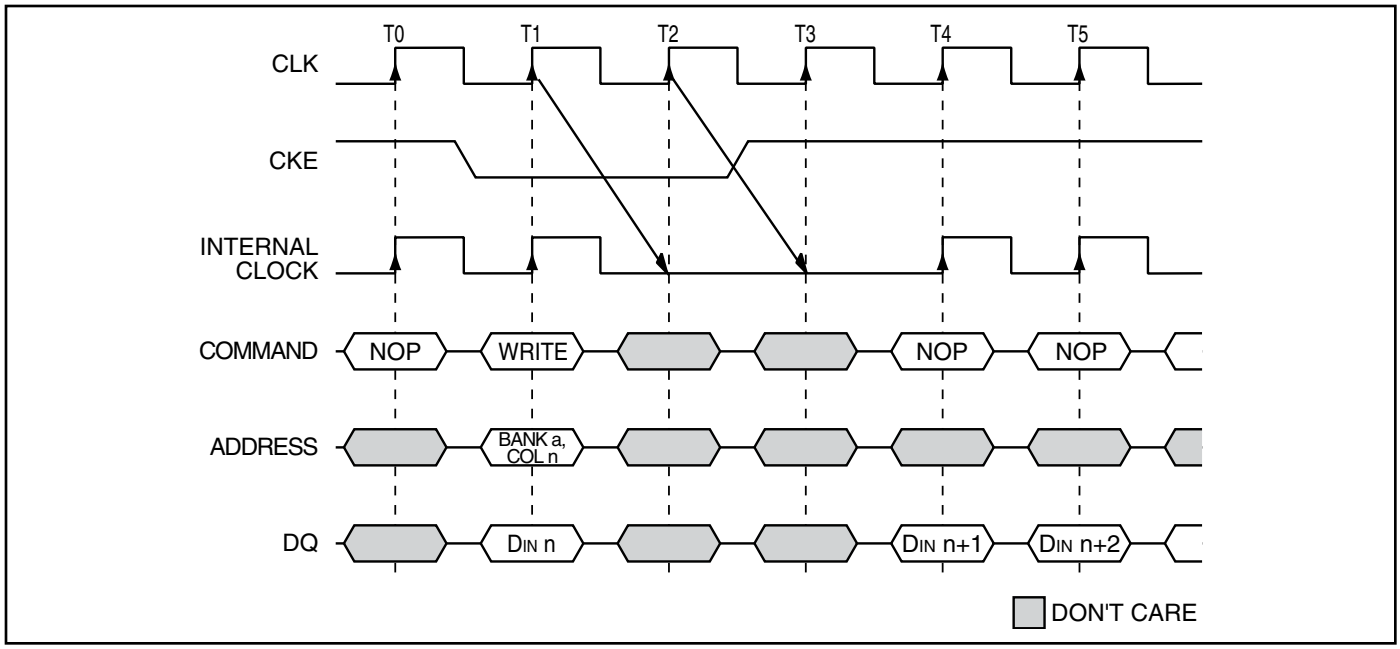

Clock Suspend During READ Burst

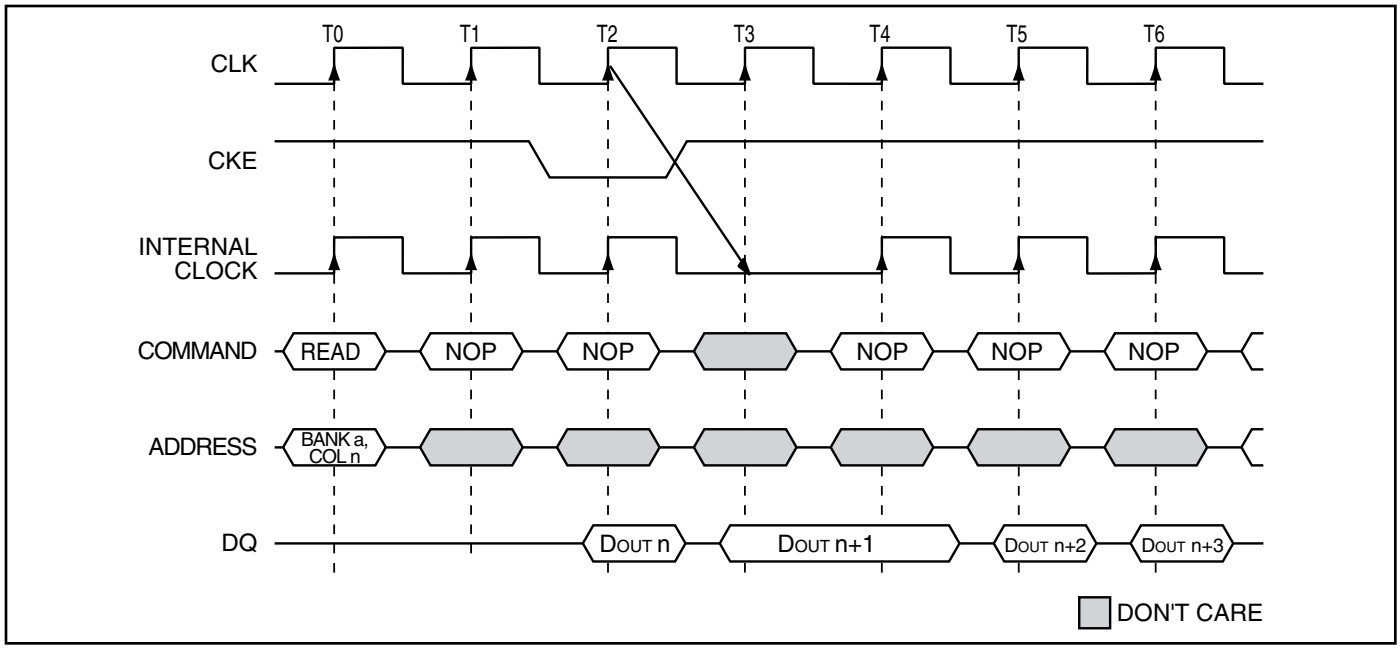

CLOCK SUSPEND MODE

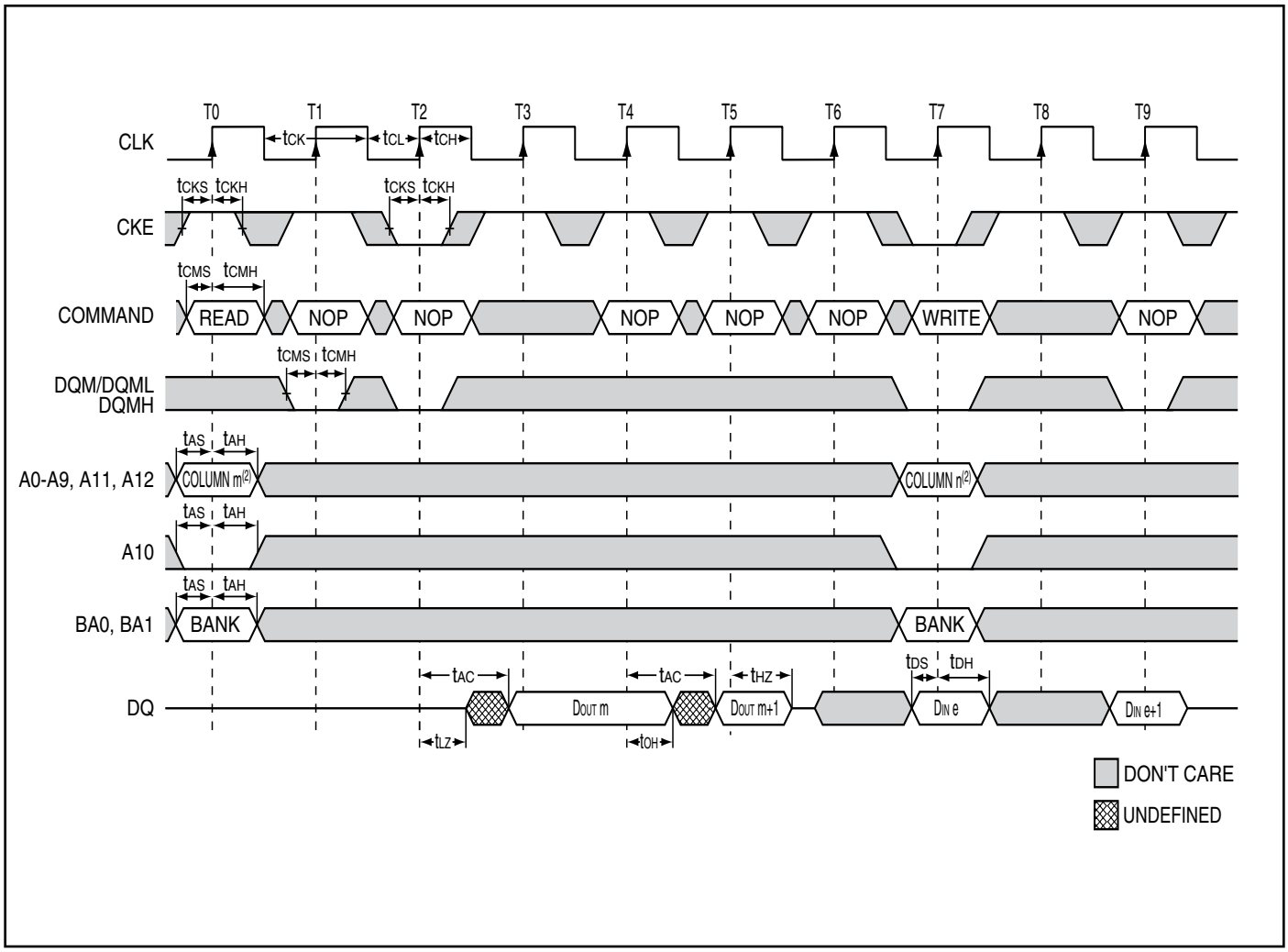

Notes:

1) $\overline{\text{CAS}}$ latency = 3, Burst Length = 2, Auto Precharge is disabled.
2) X16: A9, A11, and A12 = "Don't Care"
   X8: A11 and A12 = "Don't Care"

PRECHARGE

The PRECHARGE command (see figure) is used to deactivate the open row in a particular bank or the open row in all banks. The bank(s) will be available for a subsequent row access some specified time (t_{RP}) after the PRECHARGE command is issued. Input A10 determines whether one or all banks are to be precharged, and in the case where only one bank is to be precharged, inputs BA0, BA1 select the bank. When all banks are to be precharged, inputs BA0, BA1 are treated as "Don't Care." Once a bank has been precharged, it is in the idle state and must be activated prior to any READ or WRITE commands being issued to that bank.

PRECHARGE Command

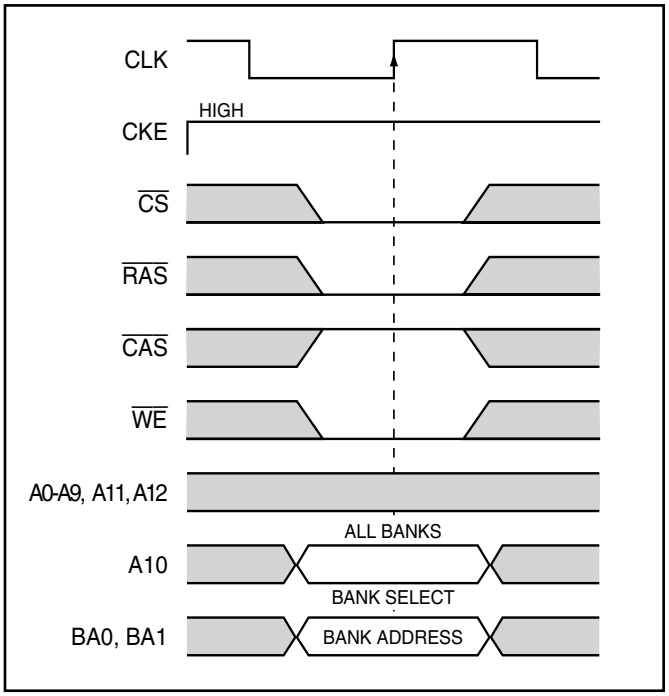

POWER-DOWN

Power-down occurs if CKE is registered LOW coincident with a NOP or COMMAND INHIBIT when no accesses are in progress. If power-down occurs when all banks are idle, this mode is referred to as precharge power-down; if power-down occurs when there is a row active in either bank, this mode is referred to as active power-down. Entering power-down deactivates the input and output buffers, excluding CKE, for maximum power savings while in standby. The device may not remain in the power-down state longer than the refresh period (64ms) since no refresh operations are performed in this mode.

The power-down state is exited by registering a NOP or COMMAND INHIBIT and CKE HIGH at the desired clock edge (meeting t_{CKS}). See figure below.

POWER-DOWN

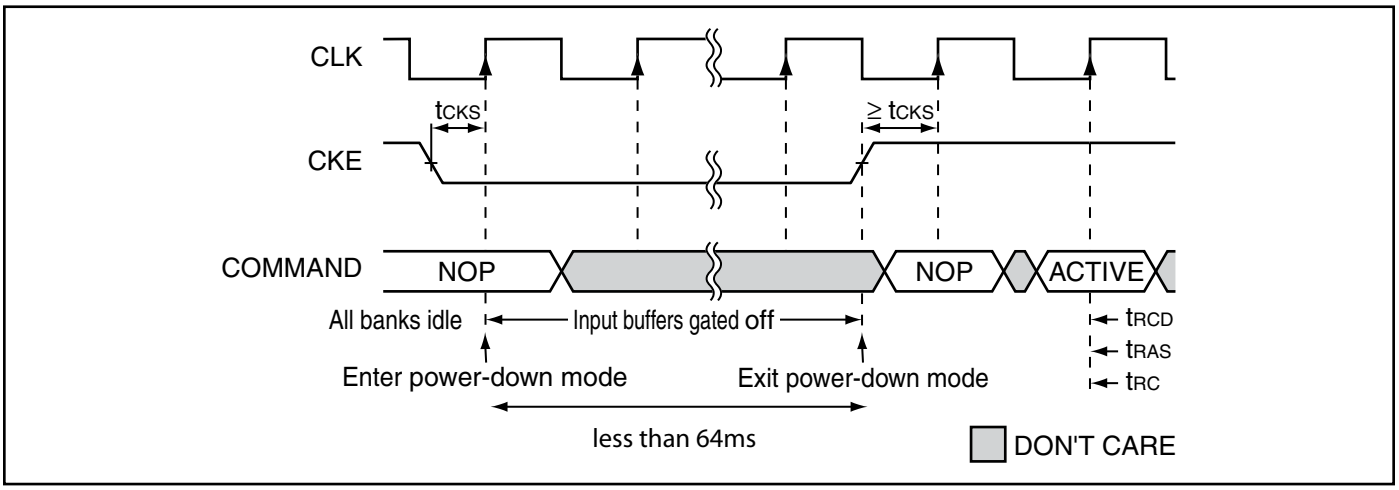

POWER-DOWN MODE CYCLE

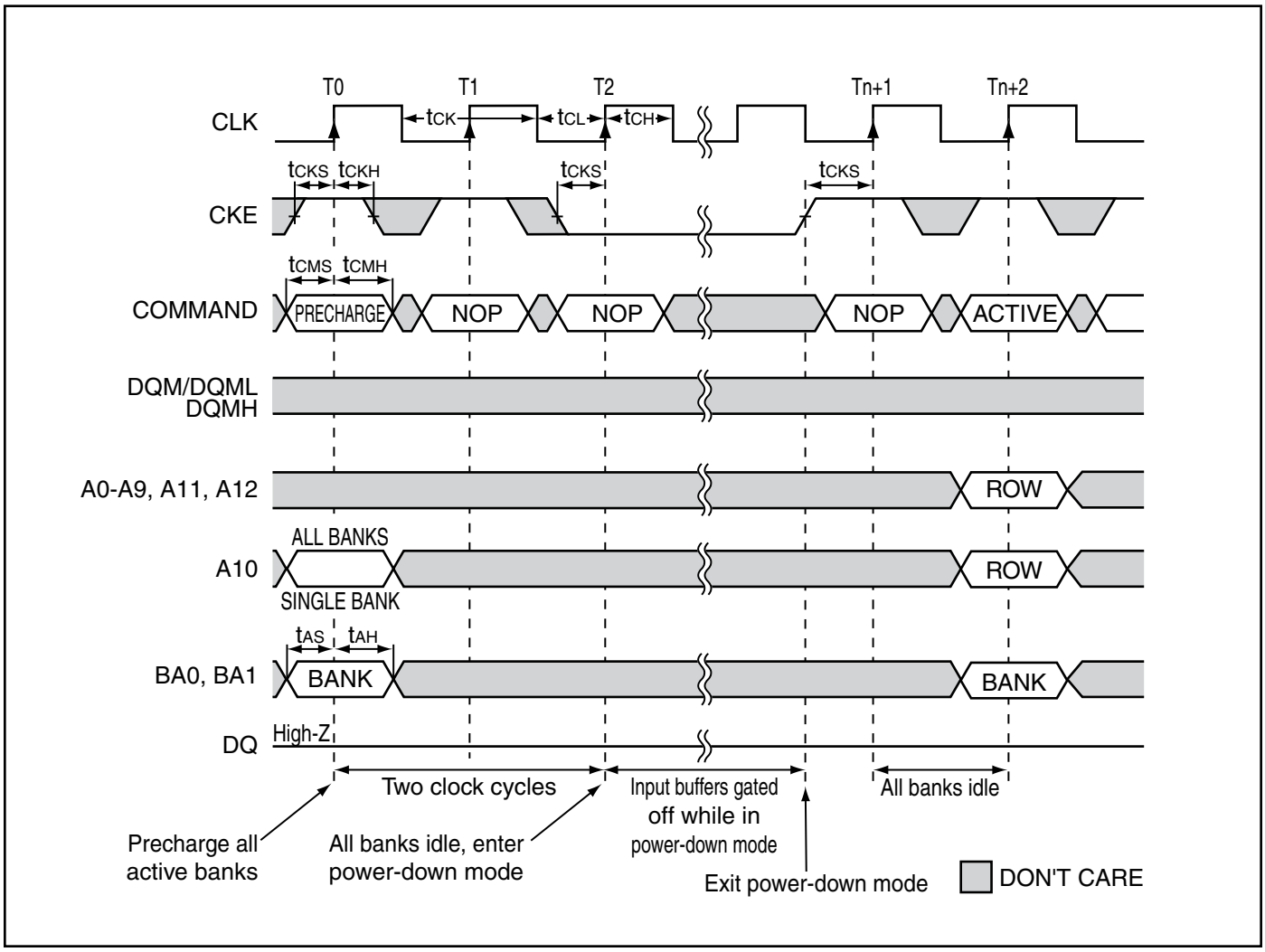

BURST READ/SINGLE WRITE

The burst read/single write mode is entered by programming the write burst mode bit (M9) in the mode register to a logic 1. In this mode, all WRITE commands result in the access of a single column location (burst of one), regardless of the programmed burst length. READ commands access columns according to the programmed burst length and sequence, just as in the normal mode of operation (M9 = 0).

CONCURRENT AUTO PRECHARGE

An access command (READ or WRITE) to another bank while an access command with auto precharge enabled is executing is not allowed by SDRAMs, unless the SDRAM supports CONCURRENT AUTO PRECHARGE. *ISSI* SDRAMs support CONCURRENT AUTO PRECHARGE. Four cases where CONCURRENT AUTO PRECHARGE occurs are defined below.

READ with Auto Precharge

1. Interrupted by a READ (with or without auto precharge): A READ to bank m will interrupt a READ on bank n, CAS latency later. The PRECHARGE to bank n will begin when the READ to bank m is registered.
2. Interrupted by a WRITE (with or without auto precharge): A WRITE to bank m will interrupt a READ on bank n when registered. DQM should be used three clocks prior to the WRITE command to prevent bus contention. The PRECHARGE to bank n will begin when the WRITE to bank m is registered.

READ With Auto Precharge interrupted by a READ

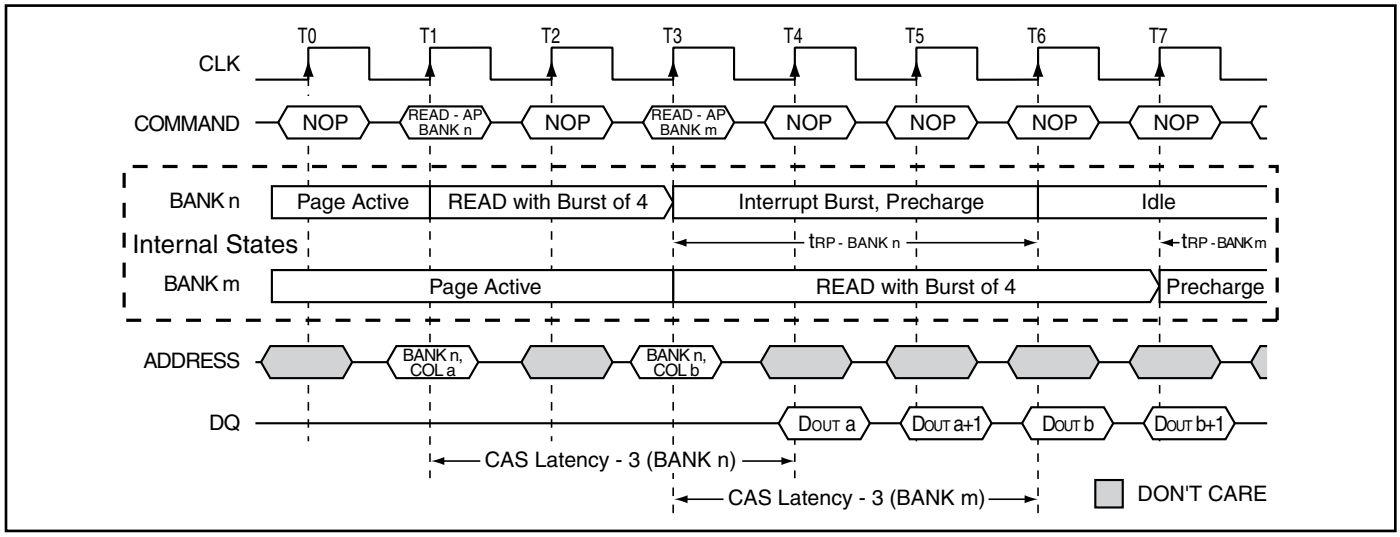

READ With Auto Precharge interrupted by a WRITE

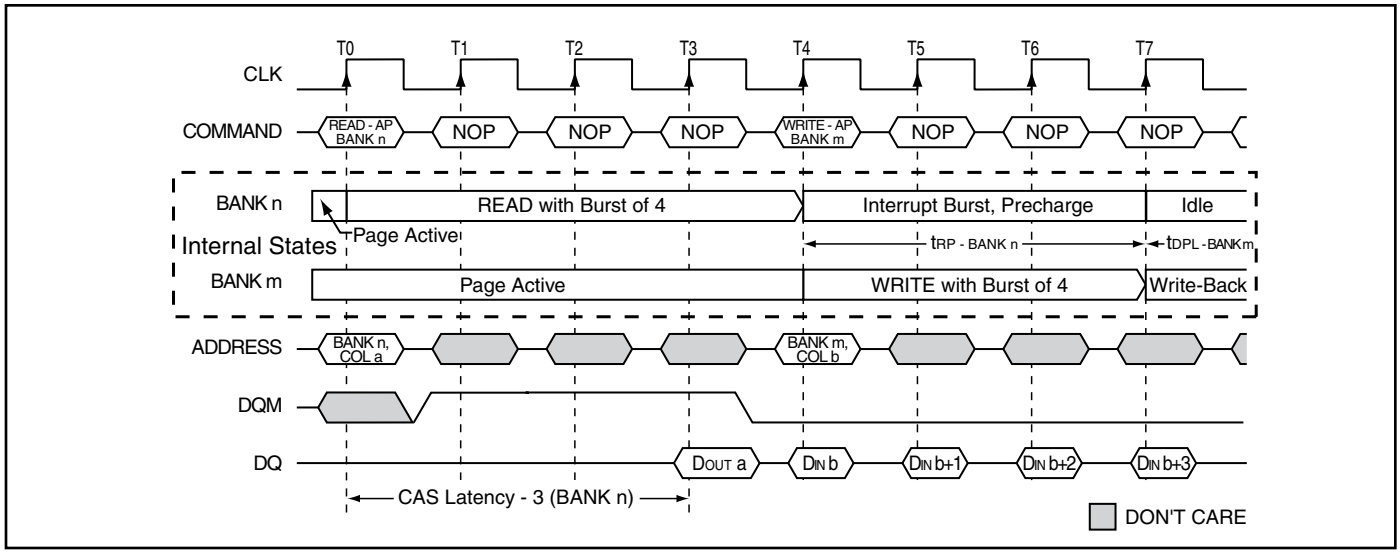

WRITE with Auto Precharge

3. Interrupted by a READ (with or without auto precharge): A READ to bank m will interrupt a WRITE on bank n when registered, with the data-out appearing (CAS latency) later. The PRECHARGE to bank n will begin after t_{DPL} is met, where t_{DPL} begins when the READ to bank m is registered. The last valid WRITE to bank n will be data-in registered one clock prior to the READ to bank m.

4. Interrupted by a WRITE (with or without auto precharge): AWRITE to bank m will interrupt a WRITE on bank n when registered. The PRECHARGE to bank n will begin after t_{DPL} is met, where t_{DPL} begins when the WRITE to bank m is registered. The last valid data WRITE to bank n will be data registered one clock prior to a WRITE to bank m.

WRITE With Auto Precharge interrupted by a READ

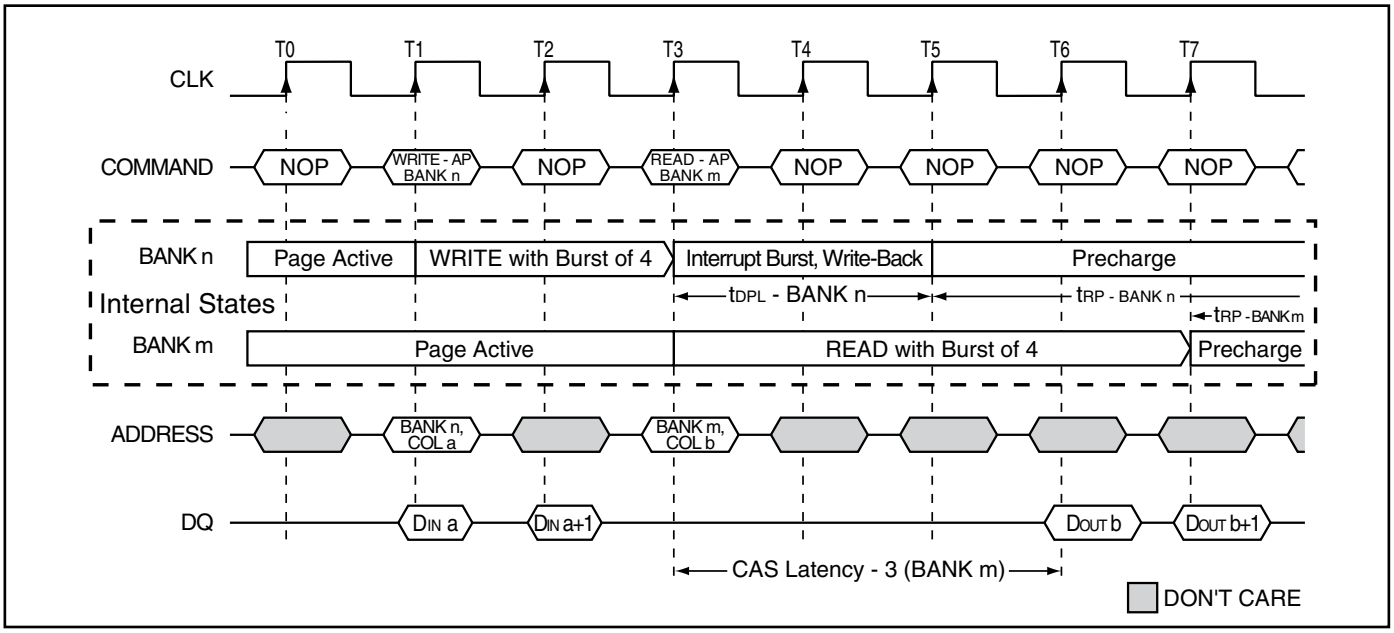

WRITE With Auto Precharge interrupted by a WRITE

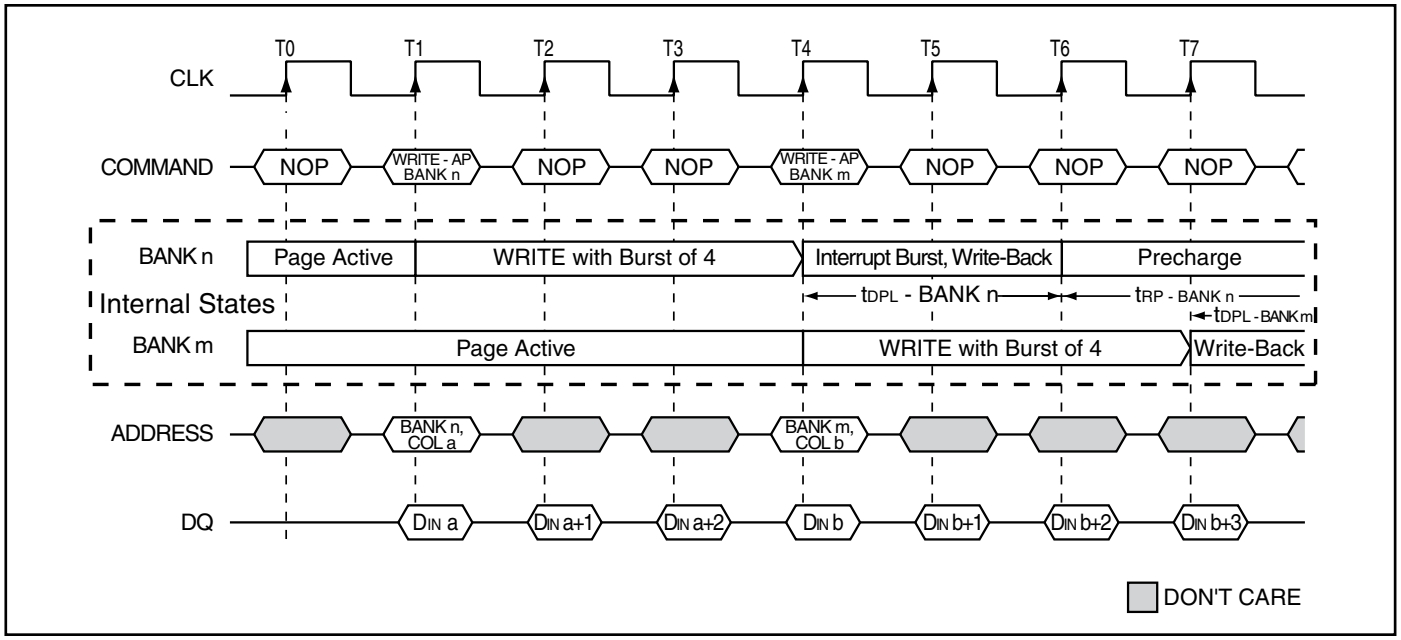

READ WITH AUTO PRECHARGE

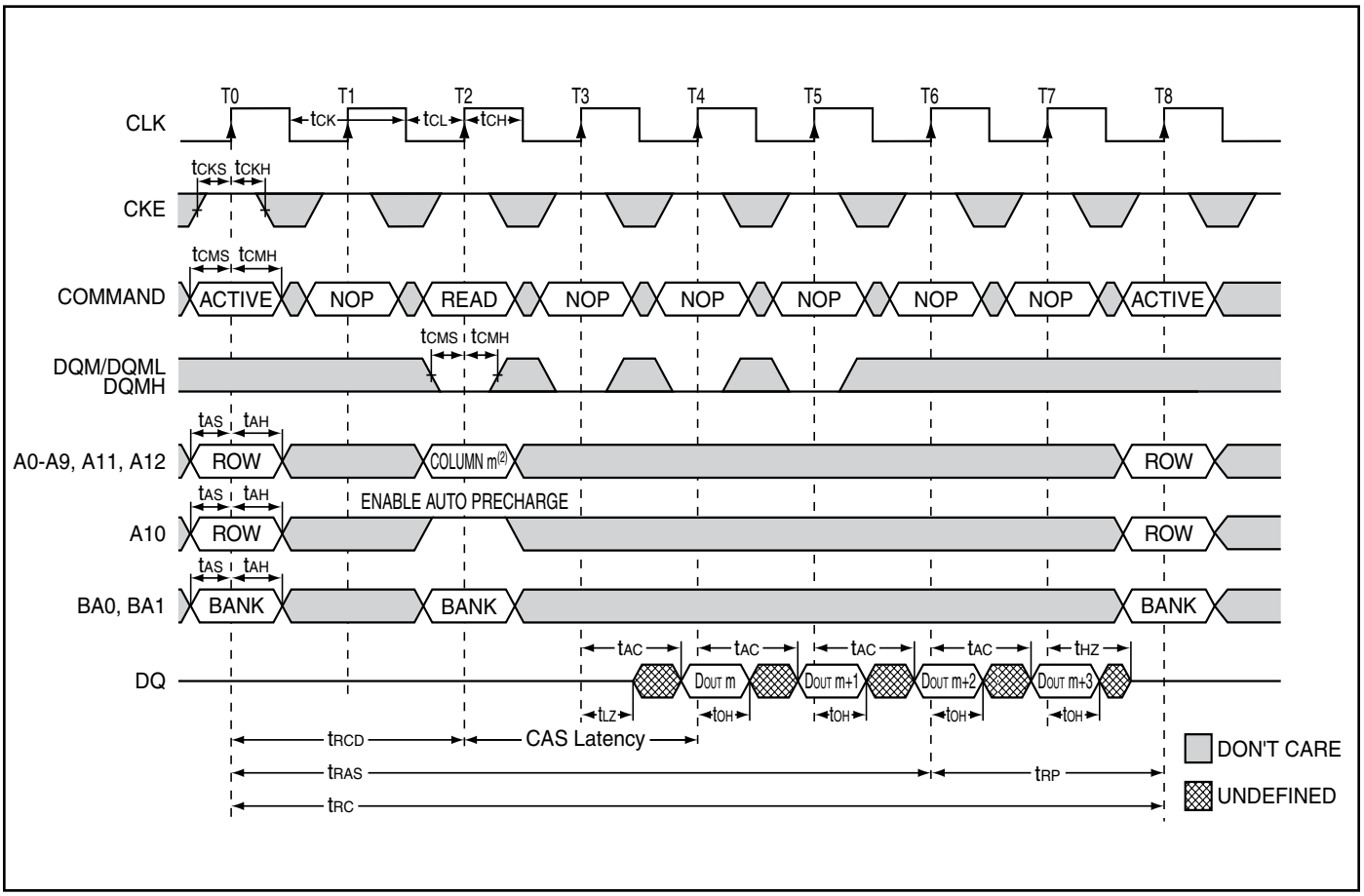

Notes:

1) $\overline{\text{CAS}}$ latency = 2, Burst Length = 4
2) x16: A9, A11, and A12 = "Don't Care"
   x8: A11 and A12 = "Don't Care"

READ WITHOUT AUTO PRECHARGE

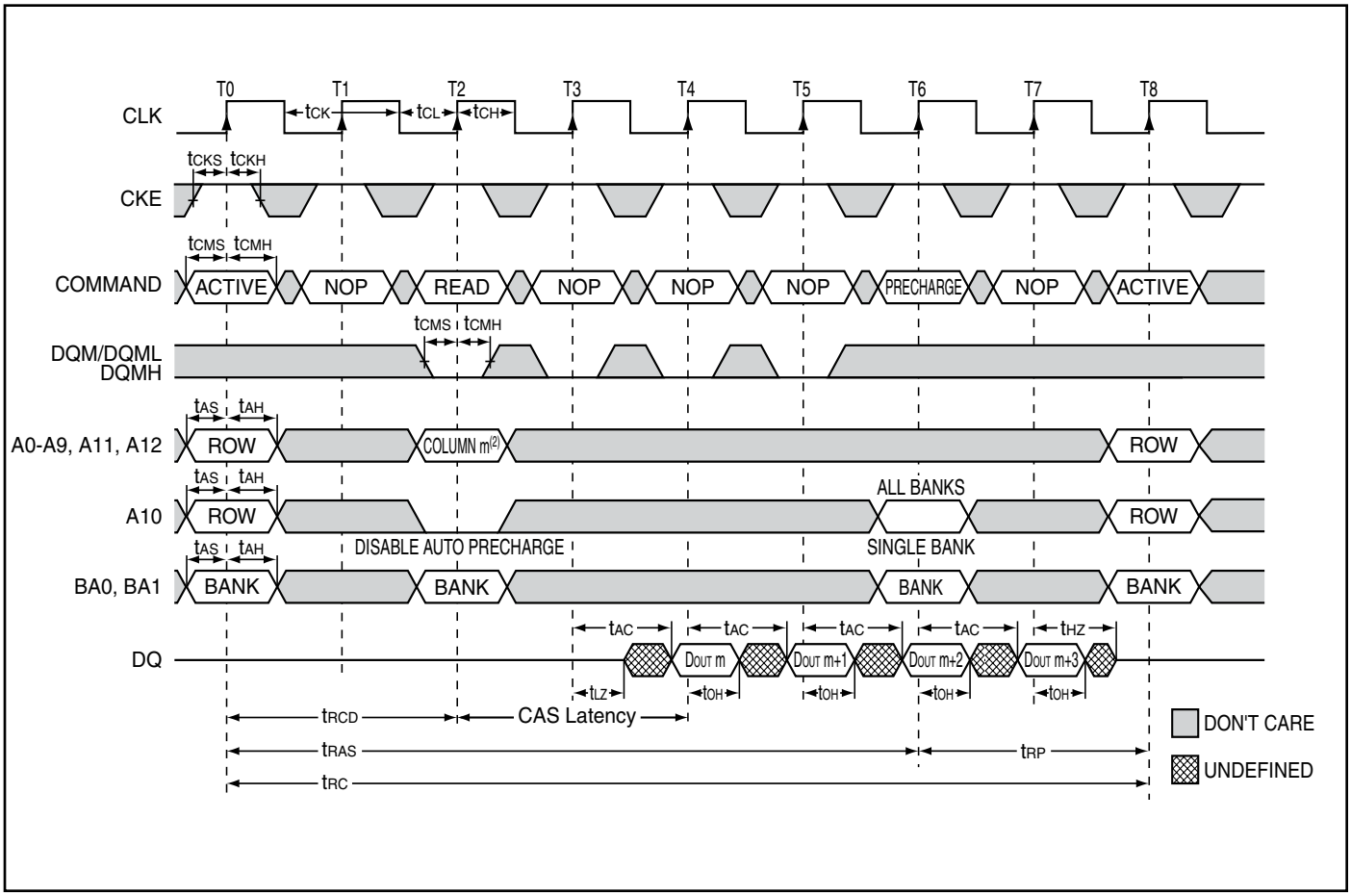

Notes:

1) $\overline{\text{CAS}}$ latency = 2, Burst Length = 4

2) x16: A9, A11, A12 = "Don't Care"
   x8: A11 and A12 = "Don't Care"

SINGLE READ WITH AUTO PRECHARGE

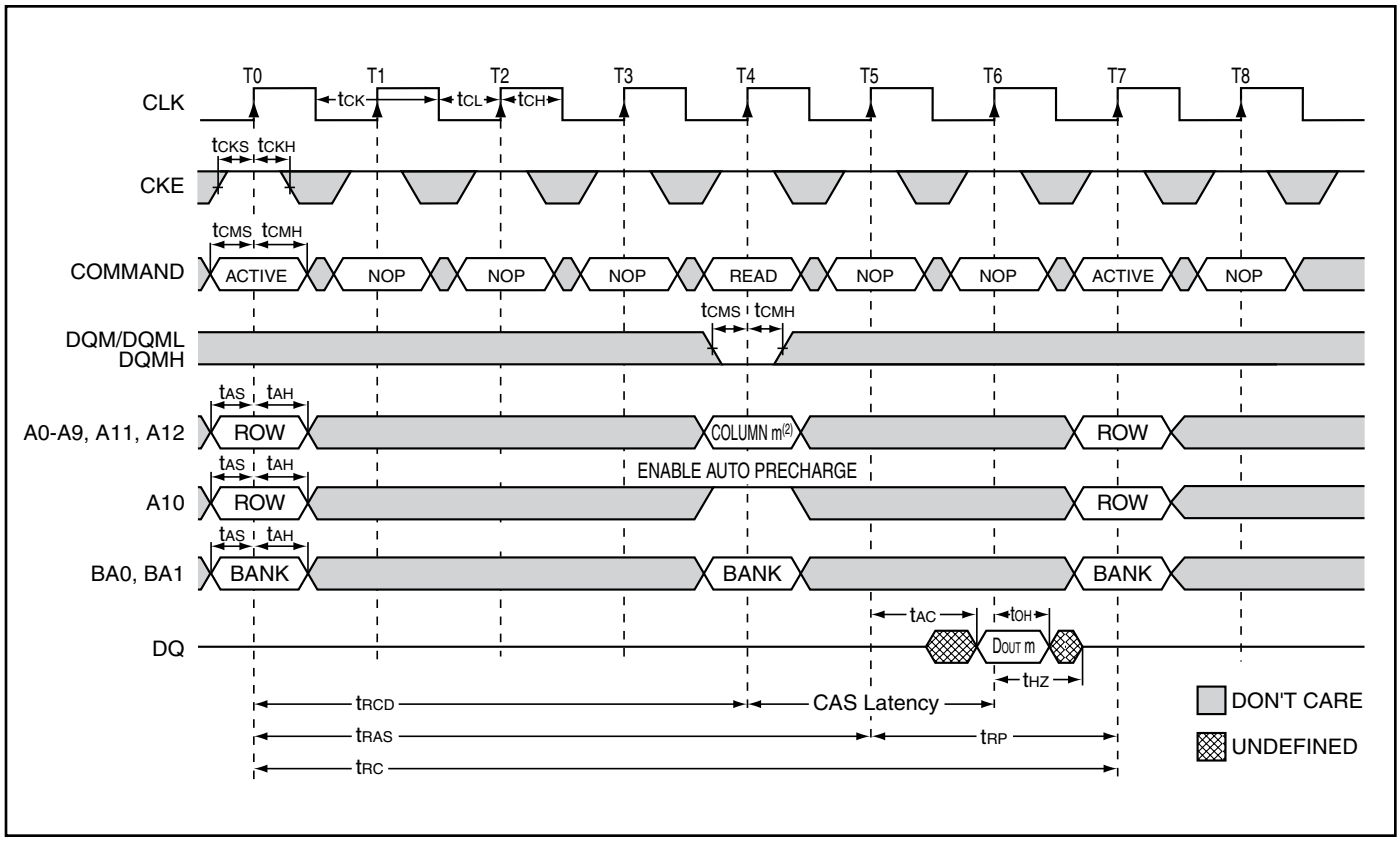

Notes:
1) $\overline{\text{CAS}}$ latency = 2, Burst Length = 1
2) x16: A9, A11, and A12 = "Don't Care"
x8: A11 and A12 = "Don't Care"

SINGLE READ WITHOUT AUTO PRECHARGE

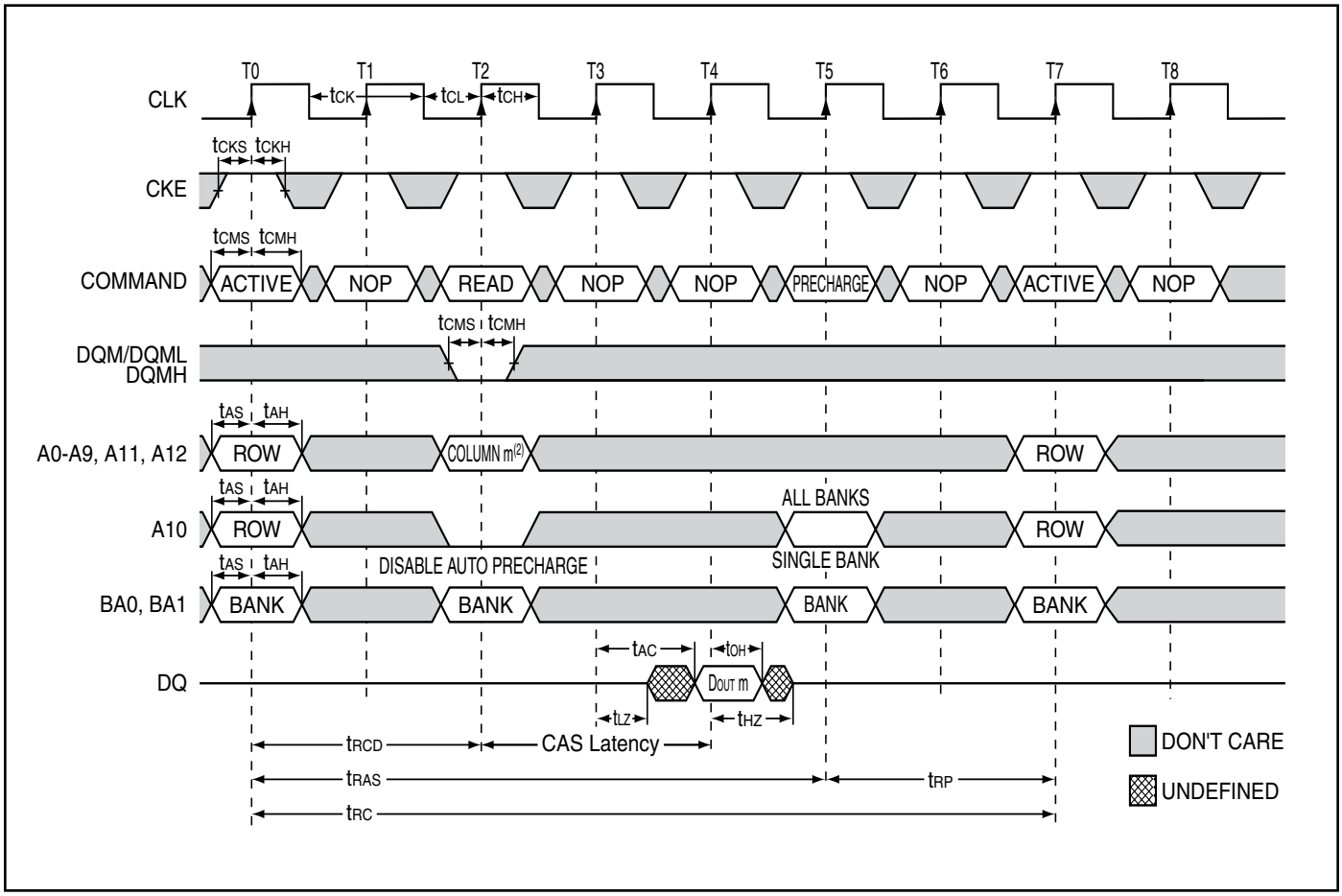

Notes:
1) $\overline{CAS}$ latency = 2, Burst Length = 1
2) x16: A9, A11, and A12 = "Don't Care"
x8: A11 and A12 = "Don't Care"

WRITE - WITH AUTO PRECHARGE

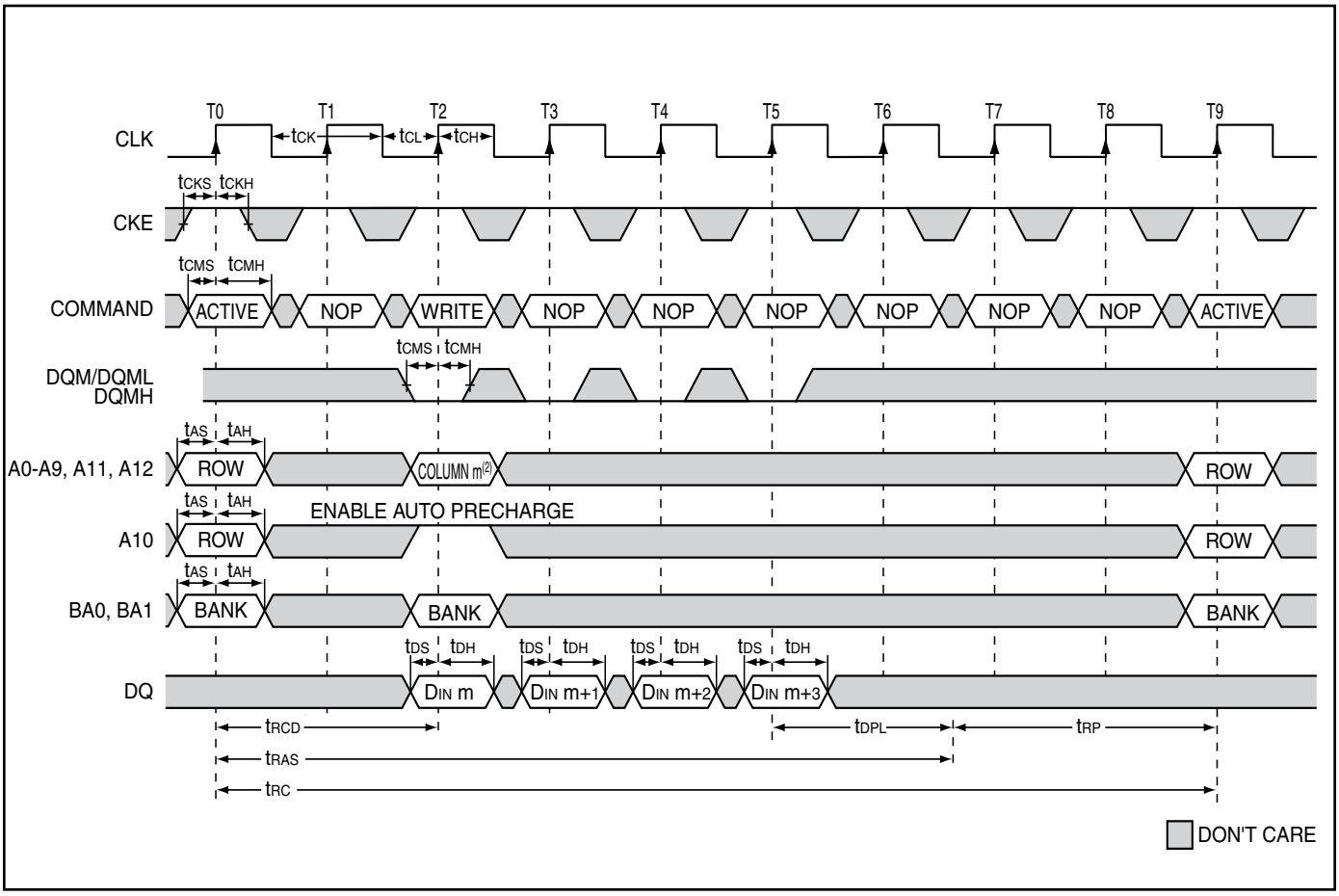

Notes:
1) Burst Length = 4
2) x16: A9, A11, and A12 = "Don't Care"
x8: A11 and A12 = "Don't Care"

WRITE - WITHOUT AUTO PRECHARGE

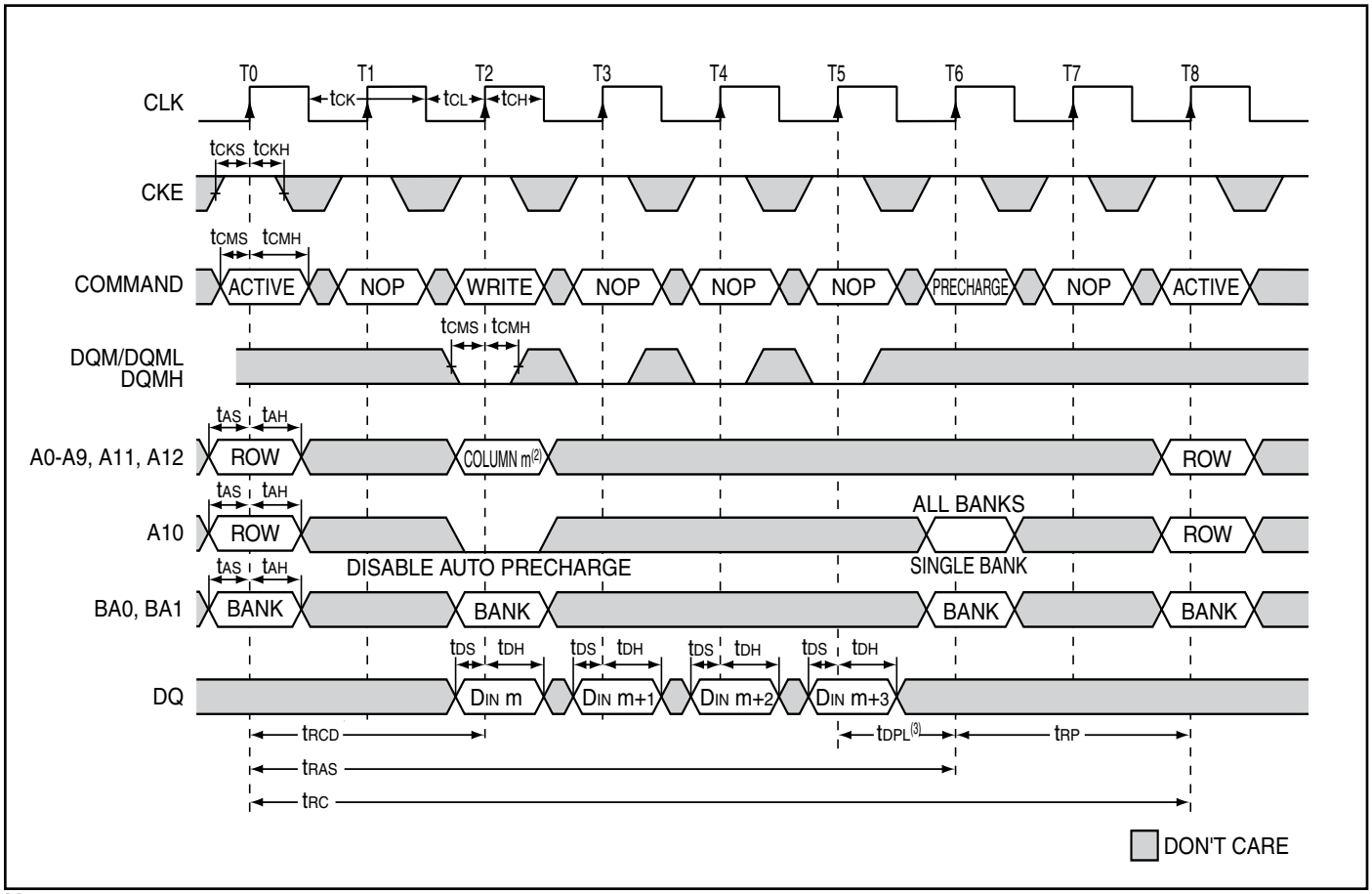

Notes:

1) Burst Length = 4
2) x16: A9, A11, and A12 = "Don't Care"
   x8: A11 and A12 = "Don't Care"
3) t_{RAS} must not be violated.

SINGLE WRITE WITH AUTO PRECHARGE

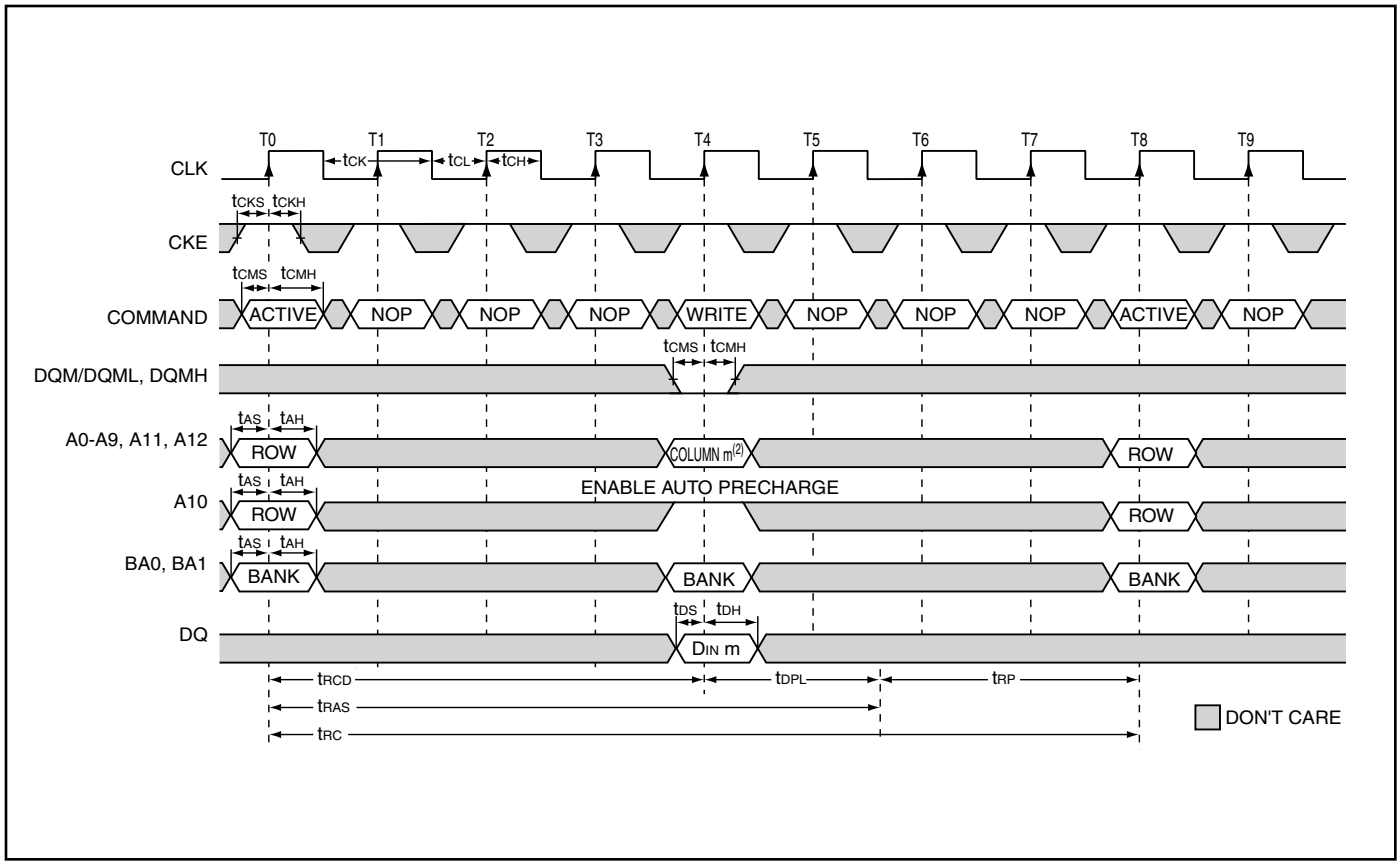

Notes:

1) Burst Length = 1

2) x16: A9, A11, and A12 = "Don't Care"
   x8: A11 and A12 = "Don't Care"

SINGLE WRITE - WITHOUT AUTO PRECHARGE

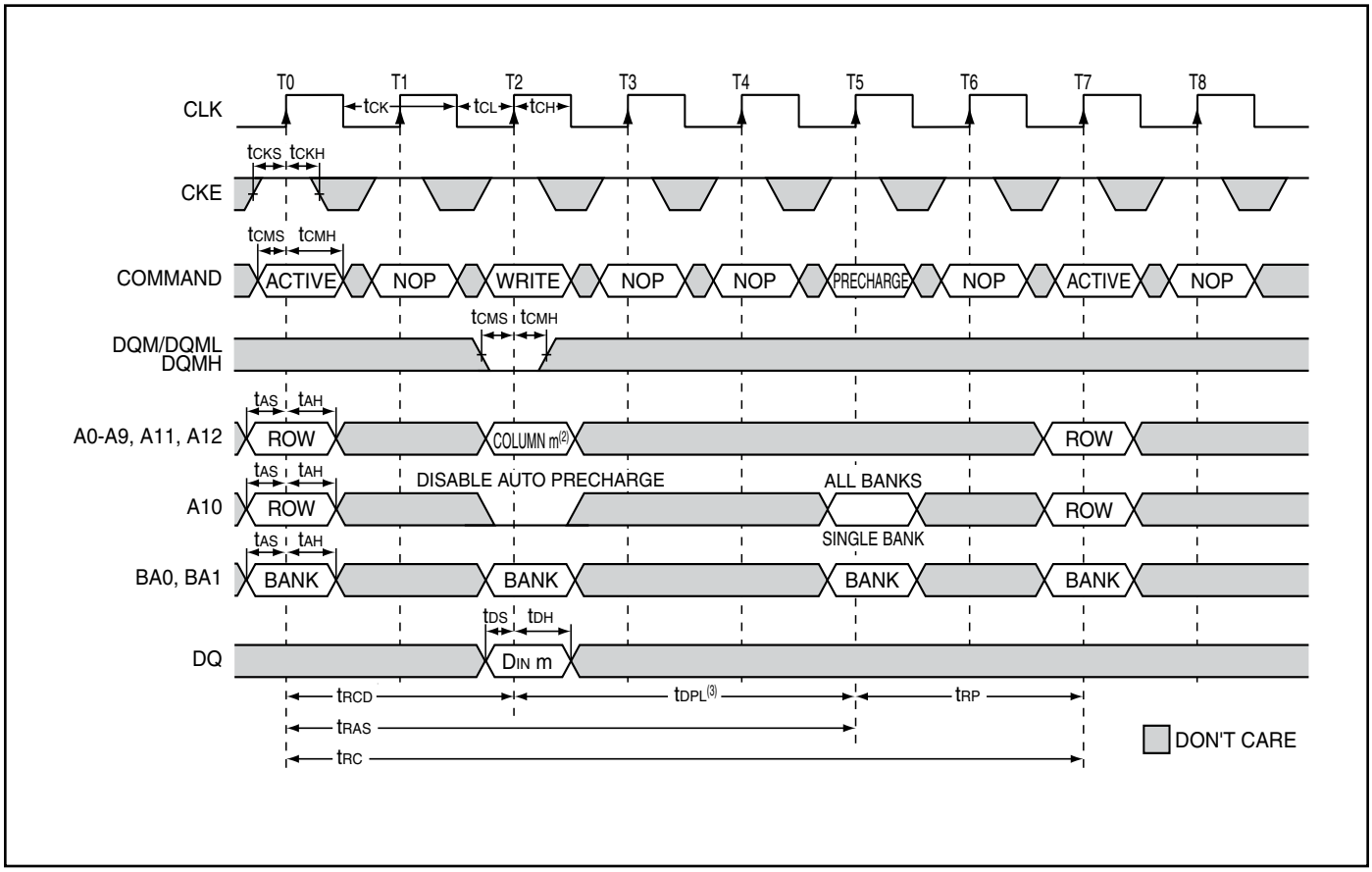

Notes:

1) Burst Length = 1
2) x16: A9, A11, and A12 = "Don't Care"
   x8: A11 and A12 = "Don't Care"
3) t_{RAS} must not be violated.

ORDERING INFORMATION - V_{DD} = 3.3V

Commercial Range: 0°C to +70°C

Frequency	Speed (ns)	Order Part No.	Package
166 MHz	6	IS42S83200J-6TL	54-Pin TSOPII, Lead-free
143 MHz	7	IS42S83200J-7TL	54-Pin TSOPII, Lead-free
		IS42S83200J-7BL	54-Ball BGA, Lead-free

Frequency	Speed (ns)	Order Part No.	Package
166 MHz	6	IS42S16160J-6TL	54-Pin TSOPII, Lead-free
		IS42S16160J-6BL	54-Ball BGA, Lead-free
143 MHz	7	IS42S16160J-7TL	54-Pin TSOPII, Lead-free
		IS42S16160J-7BL	54-Ball BGA, Lead-free

Industrial Range: -40°C to +85°C

Frequency	Speed (ns)	Order Part No.	Package
166 MHz	6	IS42S83200J-6TLI	54-Pin TSOPII, Lead-free
143 MHz	7	IS42S83200J-7TLI	54-Pin TSOPII, Lead-free
		IS42S83200J-7BLI	54-Ball BGA, Lead-free

Frequency	Speed (ns)	Order Part No.	Package
166 MHz	6	IS42S16160J-6TLI	54-Pin TSOPII, Lead-free
		IS42S16160J-6BLI	54-Ball BGA, Lead-free
143 MHz	7	IS42S16160J-7TLI	54-Pin TSOPII, Lead-free
		IS42S16160J-7BLI	54-Ball BGA, Lead-free
		IS42S16160J-7BI	54-Ball BGA

Automotive Range A1: -40°C to +85°C

Frequency	Speed (ns)	Order Part No.	Package
166 MHz	6	IS45S83200J-6TLA1	54-Pin TSOPII, Alloy42 leadframe plated with matte Sn
143 MHz	7	IS45S83200J-7TLA1	54-Pin TSOPII, Alloy42 leadframe plated with matte Sn
		IS45S83200J-7CTLA1	54-Pin TSOPII, Cu leadframe plated with matte Sn
		IS45S83200J-7BLA1	54-ball BGA, SnAgCu balls

Frequency	Speed (ns)	Order Part No.	Package
166 MHz	6	IS45S16160J-6TLA1	54-Pin TSOPII, Alloy42 leadframe plated with matte Sn
		IS45S16160J-6BLA1	54-ball BGA, SnAgCu balls
143 MHz	7	IS45S16160J-7TLA1	54-Pin TSOPII, Alloy42 leadframe plated with matte Sn
		IS45S16160J-7CTLA1	54-Pin TSOPII, Cu leadframe plated with matte Sn
		IS45S16160J-7BLA1	54-ball BGA, SnAgCu balls

Automotive Range A2: -40°C to +105°C

Frequency	Speed (ns)	Order Part No.	Package
143 MHz	7	IS45S83200J-7TLA2	54-Pin TSOPII, Alloy42 leadframe plated with matte Sn
		IS45S83200J-7CTLA2	54-Pin TSOPII, Cu leadframe plated with matte Sn

Frequency	Speed (ns)	Order Part No.	Package
143 MHz	7	IS45S16160J-7TLA2	54-Pin TSOPII, Alloy42 leadframe plated with matte Sn
		IS45S16160J-7CTLA2	54-Pin TSOPII, Cu leadframe plated with matte Sn
		IS45S16160J-7BLA2	54-ball BGA, SnAgCu balls

Notes:
1. Contact ISSI for leaded and copper lead frame parts support.
2. Part numbers with "L" are leadfree, and RoHS compliant.

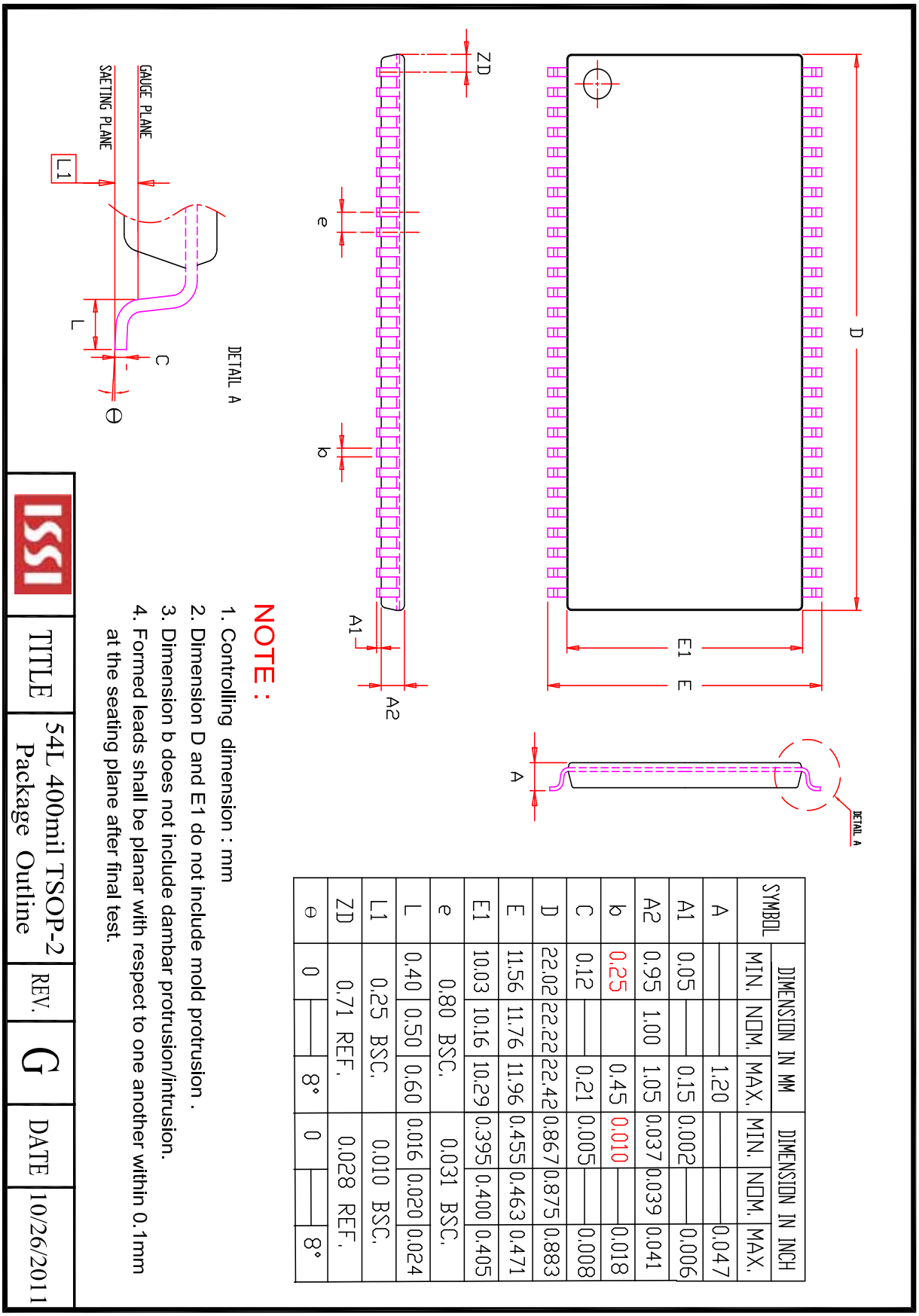

SYMBOL	DIMENSION IN MM			DIMENSION IN INCH		
	MIN.	NOM.	MAX.	MIN.	NOM.	MAX.
A	—	—	1.20	—	—	0.047
A1	0.05	—	0.15	0.002	—	0.006
A2	0.95	1.00	1.05	0.037	0.039	0.041
b	0.25		0.45	0.010	—	0.018
C	0.12	—	0.21	0.005	—	0.008
D	22.02	22.22	22.42	0.867	0.875	0.883
E	11.56	11.76	11.96	0.455	0.463	0.471
E1	10.03	10.16	10.29	0.395	0.400	0.405
e	0.80 BSC.			0.031 BSC.		
L	0.40	0.50	0.60	0.016	0.020	0.024
L1	0.25 BSC.			0.010 BSC.		
ZD	0.71 REF.			0.028 REF.		
θ	0	—	8°	0	—	8°

NOTE :

1. Controlling dimension : mm
2. Dimension D and E1 do not include mold protrusion .
3. Dimension b does not include dambar protrusion/intrusion.
4. Formed leads shall be planar with respect to one another within 0.1mm at the seating plane after final test.

TITLE	54L 400mil TSOP-2 Package Outline	REV.	G	DATE	10/26/2011

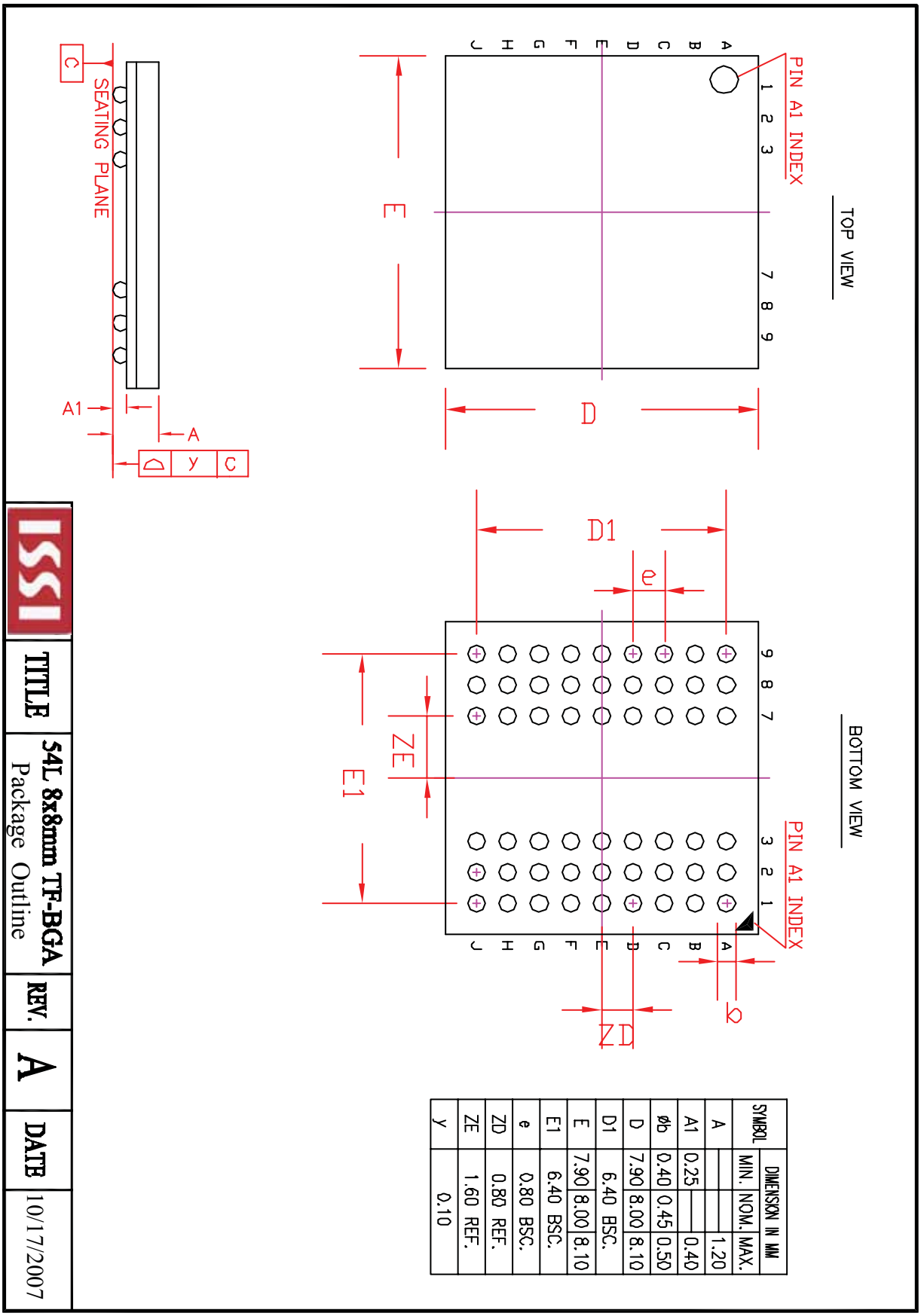

SYMBOL	DIMENSION IN MM		
	MIN.	NOM.	MAX.
A	—	—	1.20
A1	0.25	—	0.40
øb	0.40	0.45	0.50
D	7.90	8.00	8.10
D1		6.40 BSC.	
E	7.90	8.00	8.10
E1		6.40 BSC.	
e		0.80 BSC.	
ZD		0.80 REF.	
ZE		1.60 REF.	
y		0.10	

OCEAN CHIPS
Океан Электроники
Поставка электронных компонентов

Компания «Океан Электроники» предлагает заключение долгосрочных отношений при поставках импортных электронных компонентов на взаимовыгодных условиях!

Наши преимущества:

- Поставка оригинальных импортных электронных компонентов напрямую с производств Америки, Европы и Азии, а так же с крупнейших складов мира;
- Широкая линейка поставок активных и пассивных импортных электронных компонентов (более 30 млн. наименований);
- Поставка сложных, дефицитных, либо снятых с производства позиций;
- Оперативные сроки поставки под заказ (от 5 рабочих дней);
- Экспресс доставка в любую точку России;
- Помощь Конструкторского Отдела и консультации квалифицированных инженеров;
- Техническая поддержка проекта, помощь в подборе аналогов, поставка прототипов;
- Поставка электронных компонентов под контролем ВП;
- Система менеджмента качества сертифицирована по Международному стандарту ISO 9001;
- При необходимости вся продукция военного и аэрокосмического назначения проходит испытания и сертификацию в лаборатории (по согласованию с заказчиком);
- Поставка специализированных компонентов военного и аэрокосмического уровня качества (Xilinx, Altera, Analog Devices, Intersil, Interpoint, Microsemi, Actel, Aeroflex, Peregrine, VPT, Syfer, Eurofarad, Texas Instruments, MS Kennedy, Miteq, Cobham, E2V, MA-COM, Hittite, Mini-Circuits, General Dynamics и др.);

Компания «Океан Электроники» является официальным дистрибьютором и эксклюзивным представителем в России одного из крупнейших производителей разъемов военного и аэрокосмического назначения **«JONHON»**, а так же официальным дистрибьютором и эксклюзивным представителем в России производителя высокотехнологичных и надежных решений для передачи СВЧ сигналов **«FORSTAR»**.

AVIC JONHON

«JONHON» (основан в 1970 г.)

Разъемы специального, военного и аэрокосмического назначения:

(Применяются в военной, авиационной, аэрокосмической, морской, железнодорожной, горно- и нефтедобывающей отраслях промышленности)

«FORSTAR» (основан в 1998 г.)

ВЧ соединители, коаксиальные кабели, кабельные сборки и микроволновые компоненты:

(Применяются в телекоммуникациях гражданского и специального назначения, в средствах связи, РЛС, а так же военной, авиационной и аэрокосмической отраслях промышленности).

FORSTAR®

Телефон: 8 (812) 309-75-97 (многоканальный)
Факс: 8 (812) 320-03-32
Электронная почта: ocean@oceanchips.ru
Web: http://oceanchips.ru/
Адрес: 198099, г. Санкт-Петербург, ул. Калинина, д. 2, корп. 4, лит. А