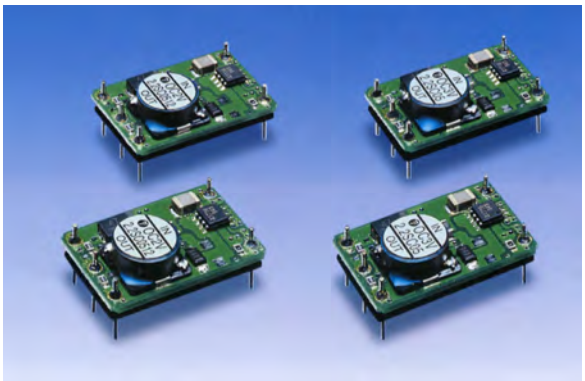

OC1XX-SCXXXX-A

4.6~28.8 WATT
NON-ISOLATED
DC-DC CONVERTER

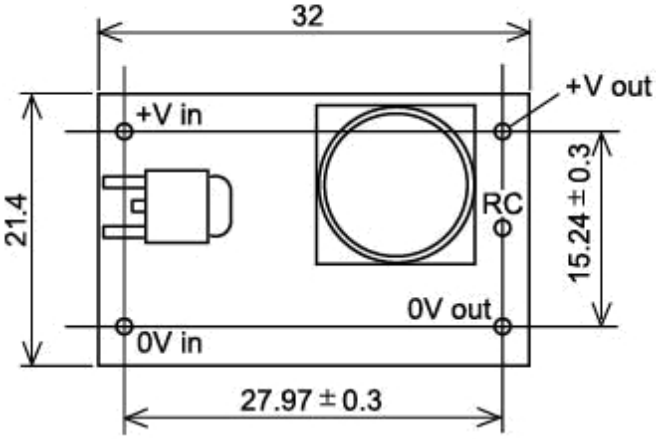

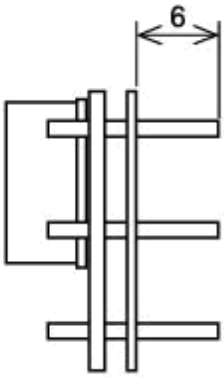

Turn on by inputting voltage (4.5 to 56V) between "RC"pin and "0V"pin .Put a 5k ohm resistor between "+ in"pin and "RC"pin when remote on/off is not used

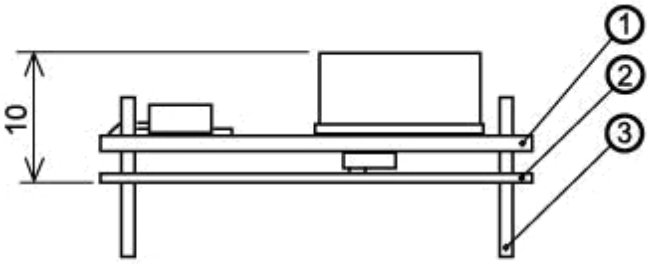

① Double-sided PCB FR4t=1.0

② t=0.5 Insulator UL94V0

③ 1.0DIA PIN Material:BsB 2700 1/2H

Solder Plating

*Tolerance ±0.5

At rated input and output, 25[℃] ambient unless noted.

SPECIFICATION \ MODEL			OC1-24SC48U1A
INPUT SPECIFICATION			
Rated Input Voltage	[V] DC		DC 48
Rated Input Current	[mA]Max.		700
Allowable Input Voltage Range	[V]		DC40.8 ～ 56
Inrush Current		※1	Not Specified (Reference : 33[A], 7[μs], DC48[V]in)
Stand-by Input Current	[mA]Typ.		14
Input Current when Remote Control is off.	[μA]Typ.		5
Input Leakage Ripple Voltade	[mVp-p]Typ.		1000
Efficiency	[%]Typ.		95.0
OUTPUT SPECIFICATION			
Maximum Output Power	[W]		4.6 ～ 28.8
Rated Output Voltage	[V]		24
Rated Output Current	[mA]		1200
Output Voltage Accuracy	[V]		23.28～24.72
Ripple and Noise	[mVp-p]Max.	※2	200
Voltage Regulation a. Line Regulation	[mV]Max.	※3	120
Voltage Regulation b. Load Regulation	[mV]Max.	※4	120
Voltage Regulation c. Temperature Effect	[mV]Max.	-20～71[℃]	655
Voltage Regulation d. Drift	[mV]Max.	※5	135
Voltage Regulation e. Dynamic Line Regulation	[mV]Max.	※6	±1500
Voltage Regulation f. Dynamic Load Regulation	[mV]Max.	※7	±200
Voltage Regulation g. Recovery Time	[ms]Max.	※6 ※7	5
Start-up Time	[ms]Max.		5
Hold-up Time			Not Specified (= 0[S])
OPTIONAL FUNCTIONS			
Over Current Protection			Auto recover, Hiccup.
	[A]Min.		1.30
Over Voltage Protection			Zener diode limiting
	[V]Min.		26.4
Operation Indicator			None
Remote Control(RC)		※8	Available
Remote Sensing(RS)			None
Power Fail(PF)			None
Output Voltage Trimming			None
Input Fuse			Built-in (2[A])
Serial Operation			Not available
Parallel Operation			Not available (1+1 redundant with using OR-ing diode is acceptable.)
GENERAL SPECICATIONS			
Operating Temperature	[℃]		Refer to the De-Rating Condition. -20 ～ +71
Storage Temperature	[℃]		-20 ～ +85 Except thermal shock
Operating Humidity	[%]RH		20 ～ 90 Without condensation
Storage Humidity	[%]RH		20 ～ 90 Without condensation
Withstanding Voltage			Non Isolated
Insulation Resistance			Non Isolated
Vibration		※9	5 - 10[Hz] / XYZ axis 10[mm], 10 - 550[Hz] / 24.5[m/s^2] XYZ axis (non-operating)
Shock		※9	294[m/s^2] / XYZ axis.
Cooling Method			Convection Cooling
APPLIED STANDARDS			
Safety Standards			North America : UL60950-1 2nd ed.2011-12-19 Approved : CAN/CSA-C22.2 No.60950-1-07 2nd ed.2011-12 Approved
DIMENSION AND WEIGHT			
Appearance			On-Board Type
Dimension	[mm] (HxWxD)		10 x 32 x 21.4
Weight	[g]Max.		8
REFERENCE			
MTBF	[h]	※10	587,986.27

※1 Reference : At cold start.
※2 Measured by Measured by a Bayonet type probe. Bandwidth DC-100[MHz].
※3 40.8 to 56[V] DC input voltage.
※4 At 48[V] DC , 0 to 100[%] load.
※5 Up to 8[h] after 1[h].
※6 At rated load , input voltage is changed between 40.8[V] DC and 56[V] DC.
※7 At 48[V] DC , load is changed between 25[%] and 75[%]
※8 ON : Apply DC2.8V-Input Voltage between PIN "RC" and "OV" (Inflowing current will be 5-500[μA]Typ. when 5-56V applied)
OFF: When PIN "RC" and "OV" is open
Short the PIN "RC" and "+Input Voltage" when not using the RC function
※9 The hole size of the mother board have to be 1.3[φ], Solder resist window 3.4[φ]
(In Thickness 1.6[mm] CEM-3 mother board).
Mother board have to be Non-resonated.
※10 Standard for recommended reliability estimation of components' count method of JEITA's switching power supply. According to JEITA RCR-9102B(MIL-HDBK-217F-NOTICE 2).

At rated input and output, 25[℃] ambient unless noted.

SPECIFICATION \ MODEL				OC1-3.3SC1224U1A		OC1-05SC1224U1A		OC1-06SC1224U1A	
INPUT SPECIFICATION									
Rated Input Voltage		[V] DC		12	24	12	24	12	24
Rated Input Current		[mA]Max.		500	300	800	400	900	450
Allowable Input Voltage Range		[V]		DC10.2 ～ 32					
Inrush Current			※1	Not Specified (Reference : 8[A], 10[μs], DC12[V]in / 13[A], 8[μs], DC24[V]in)					
Stand-by Input Current		[mA]Typ.		10	11	10	11	10	11
Input Current when Remote Control is off.		[μA]Typ.		1	2	1	2	1	2
Input Leakage Ripple Voltade		[mVp-p]Typ.		500	500	700	700	700	700
Efficiency		[%]Typ.		84.0	81.0	89.0	87.0	90.0	88.0
OUTPUT SPECIFICATION									
Maximum Output Power		[W]		4.6 ～ 28.8					
Rated Output Voltage		[V]		3.3		5		6	
Rated Output Current		[mA]		1400		1400		1400	
Output Voltage Accuracy		[V]		3.20～3.40		4.85～5.15		5.82～6.18	
Ripple and Noise		[mVp-p]Max.	※2	200		200		200	
Voltage Regulation	a.Line Regulation	[mV]Max.	※3	18		25		30	
Voltage Regulation	b.Load Regulation	[mV]Max.	※4	18		25		30	
Voltage Regulation	c.Temperature Effect	[mV]Max.	-20～71[℃]	91		137		164	
Voltage Regulation	d.Drift	[mV]Max.	※5	30		40		45	
Voltage Regulation	e.Dynamic Line Regulation	[mV]Max.	※6	±500		±1000		±1000	
Voltage Regulation	f.Dynamic Load Regulation	[mV]Max.	※7	±200		±200		±200	
Voltage Regulation	g.Recovery Time	[ms]Max.	※6 ※7	5					
Start-up Time		[ms]Max.		5					
Hold-up Time				Not Specified (= 0[S])					
OPTIONAL FUNCTIONS									
Over Current Protection				Auto recover.Hiccup.					
		[A]Min.		1.50		1.50		1.50	
Over Voltage Protection				Zener diode limiting					
		[V]Min.		3.63		5.75		6.90	
Operation Indicator				None					
Remote Control(RC)			※8	Available					
Remote Sensing(RS)				None					
Power Fail(PF)				None					
Output Voltage Trimming				None					
Input Fuse				Built-in (2[A])					
Serial Operation				Not available					
Parallel Operation				Not available (1+1 redundant with using OR-ing diode is acceptable.)					
GENERAL SPECICATIONS									
Operating Temperature				Refer to the De-Rating Condition.					
		[℃]		-20 ～ +71					
Storage Temperature		[℃]		-20 ～ +85 Except thermal shock					
Operating Humidity		[%]RH		20 ～ 90 Without condensation					
Storage Humidity		[%]RH		20 ～ 90 Without condensation					
Withstanding Voltage				Non Isolated					
Insulation Resistance				Non Isolated					
Vibration			※9	5 - 10[Hz] / XYZ axis 10[mm], 10 - 55 0[Hz] / 24.5[m/s ^{2}]					
Shock			※9	294[m/s ^{2}] / XYZ axis.					
Cooling Method				Convection Cooling					
APPLIED STANDARDS									
Safety Standards				North America : UL60950-1 2nd ed.2011-12-19 Approved					
DIMENSION AND WEIGHT									
Appearance				On-Board Type					
Dimension		[mm] (HxWxD)		10 x 32 x 21.4					
Weight		[g]Max.		8					
REFERENCE									
MTBF		[h]	※10	564,882.39		564,882.39		564,882.39	

※1 Reference : At cold start.
※2 Measured by Measured by a Bayonet type probe. Bandwidth DC-100[MHz].
※3 40.8 to 56[V] DC input voltage.
※4 At 48[V] DC , 0 to 100[%] load.
※5 Up to 8[h] after 1[h].
※6 At rated load , input voltage is changed between 40.8[V] DC and 56[V] DC.
※7 At 48[V] DC , load is changed between 25[%] and 75[%]
※8 ON : Apply DC2.8V-Input Voltage between PIN "RC" and "OV" (Inflowing current
OFF: When PIN "RC" and "OV" is open
Short the PIN "RC" and "+Input Voltage" when not using the RC function
※9 The hole size of the mother board have to be 1.3[φ], Solder resist window
(In Thickness 1.6[mm] CEM-3 mother board).
Mother board have to be Non-resonated.
※10 Standard for recommended reliability estimation of components' count method
of JEITA's switching power supply. According to JEITA RCR-9102B(MIL-HDBK-

At rated input and output, 25[℃] ambient unless noted.

SPECIFICATION \ MODEL			OC1-3.3SC2448U1A		OC1-05SC2448U1A		OC1-06SC2448U1A		OC1-09SC2448U1A		OC1-12SC2448U1A		OC1-15SC2448U1A	
INPUT SPECIFICATION														
Rated Input Voltage	[V] DC		24	48	24	48	24	48	24	48	24	48	24	48
Rated Input Current	[mA]Max.		300	150	400	200	450	250	650	350	800	400	850	450
Allowable Input Voltage Range	[V]		DC20.4 ～ 56											
Inrush Current		※1	Not Specified (Reference : 16[A], 8[μs], DC24[V]in / 33[A], 7[μs], DC48[V]in)											
Stand-by Input Current	[mA]Typ.		11	13	11	13	11	13	11	13	12	13	12	13
Input Current when Remote Control is off.	[μA]Typ.		2	5	2	5	2	5	2	5	2	5	2	5
Input Leakage Ripple Voltade	[mVp-p]Typ.		500	500	700	700	700	700	700	700	800	800	900	900
Efficiency	[%]Typ.		79.0	74.0	85.0	82.0	87.0	83.0	90.0	87.0	93.0	90.0	95.0	92.0
OUTPUT SPECIFICATION														
Maximum Output Power	[W]		4.6 ～ 28.8											
Rated Output Voltage	[V]		3.3		5		6		9		12		15	
Rated Output Current	[mA]		1400		1400		1400		1400		1300		1200	
Output Voltage Accuracy	[V]		3.20～3.40		4.85～5.15		5.82～6.18		8.73～9.27		11.64～12.36		14.55～15.45	
Ripple and Noise	[mVp-p]Max.	※2	200		200		200		200		200		200	
Voltage Regulation: a. Line Regulation	[mV]Max.	※3	18		25		30		45		60		75	
Voltage Regulation: b. Load Regulation	[mV]Max.	※4	18		25		30		45		60		75	
Voltage Regulation: c. Temperature Effect	[mV]Max.	-20～71[℃]	90		137		164		246		328		410	
Voltage Regulation: d. Drift	[mV]Max.	※5	30		40		45		60		75		90	
Voltage Regulation: e. Dynamic Line Regulation	[mV]Max.	※6	±500		±1000		±1000		±1500		±1500		±1500	
Voltage Regulation: f. Dynamic Load Regulation	[mV]Max.	※7	±200		±200		±200		±200		±200		±200	
Voltage Regulation: g. Recovery Time	[ms]Max.	※6 ※7	5											
Start-up Time	[ms]Max.		5											
Hold-up Time			Not Specified (= 0[S])											
OPTIONAL FUNCTIONS														
Over Current Protection			Zener diode limiting											
	[A]Min.		1.50		1.50		1.50		1.50		1.40		1.30	
Over Voltage Protection			Zener diode limiting											
	[V]Min.		3.63		5.75		6.90		10.35		13.80		17.25	
Operation Indicator			None											
Remote Control(RC)		※8	Available											
Remote Sensing(RS)			None											
Power Fail(PF)			None											
Output Voltage Trimming			None											
Input Fuse			Built-in (2[A])											
Serial Operation			Not available											
Parallel Operation			Not available (1+1 redundant with using OR-ing diode is acceptable.)											
GENERAL SPECIFICATIONS														
Operating Temperature	[℃]		Refer to the De-Rating Condition. -20 ～ +71											
Storage Temperature	[℃]		-20 ～ +85 Except thermal shock											
Operating Humidity	[%]RH		20 ～ 90 Without condensation											
Storage Humidity	[%]RH		20 ～ 90 Without condensation											
Withstanding Voltage			Non Isolated											
Insulation Resistance			Non Isolated											
Vibration		※9	5 - 10[Hz] / XYZ axis 10[mm], 10 - 550[Hz] / 24.5[m/s^2] XYZ axis (non-operating)											
Shock		※9	294[m/s^2] / XYZ axis.											
Cooling Method			Convection Cooling											
APPLIED STANDARDS														
Safety Standards			North America : UL60950-1 2nd ed. 2011-12-19 Approved : CAN/CSA-C22.2 No.60950-1-07 2nd ed. 2011-12 Approved											
DIMENSION AND WEIGHT														
Appearance			On-Board Type											
Dimension	[mm] (HxWxD)		10 x 32 x 21.4											
Weight	[g]Max.		8											
REFERENCE														
MTBF	[h]	※10	564,882.39		564,882.39		564,882.39		564,882.39		570,125.43		570,125.43	

※1 Reference : At cold start.
※2 Measured by Measured by a Bayonet type probe. Bandwidth DC-
※3 40.8 to 56[V] DC input voltage.
※4 At 48[V] DC , 0 to 100[%] load.
※5 Up to 8[h] after 1[h].
※6 At rated load , input voltage is changed between 40.8[V] DC and
※7 At 48[V] DC , load is changed between 25[%] and 75[%]
※8 ON : Apply DC2.8V-Input Voltage between PIN "RC" and "0V"
OFF: When PIN "RC" and "0V" is open
Short the PIN "RC" and "+Input Voltage" when not using the RC function
※9 The hole size of the mother board have to be 1.3[φ], Solder (In Thickness 1.6[mm] CEM-3 mother board).
Mother board have to be Non-resonated.
※10 Standard for recommended reliability estimation of components' count method of JEITA's switching power supply. According to

Block Diagram

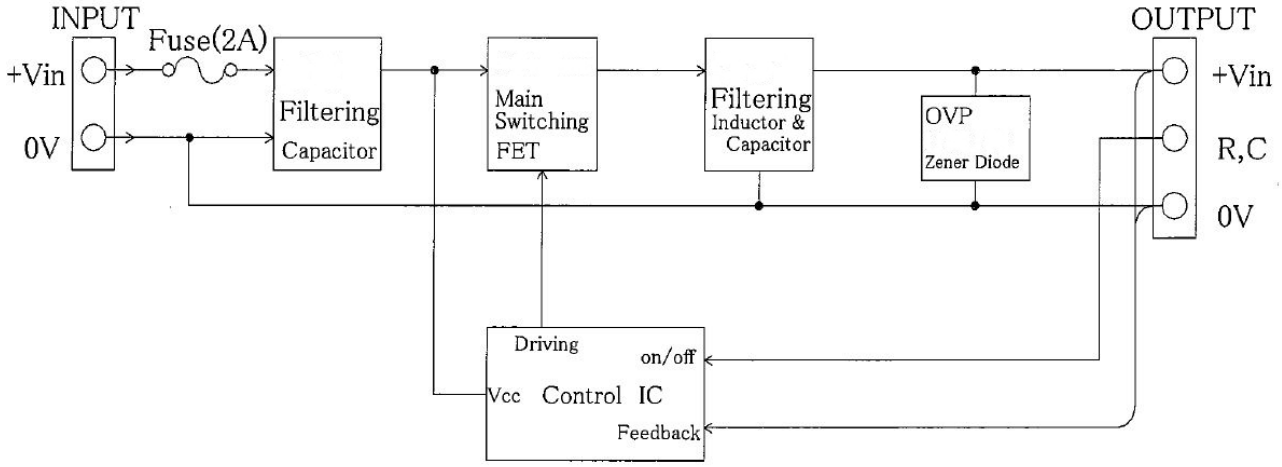

Efficiency Curve

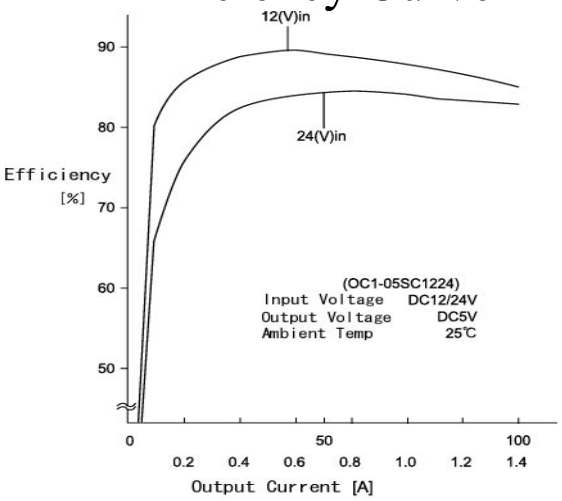

SPEC SHEET

Subject	Part number	Old IC	New IC
Rated Input current	OC1-3.3SC1224u1	550/250 [mA]	500/300[mA]Max.
	OC1-05SC1224u1	800/350 [mA]	800/400[mA]Max.
	OC1-06SC1224u1	950/450 [mA]	900/450[mA]Max.
	OC1-3.3SC2448u1	300/150 [mA]	300/150[mA]Max.
	OC1-05SC2448u1	450/200 [mA]	400/200[mA]Max.
	OC1-06SC2448u1	500/250 [mA]	450/250[mA]Max.
	OC1-09SC2448u1	700/350 [mA]	650/350[mA]Max.
	OC1-12SC2448u1	850/400 [mA]	800/400[mA]Max.
	OC1-15SC2448u1	950/450 [mA]	850/450[mA]Max.
	OC1-24SC48u1	750 [mA]	700 [mA]Max.
No load Rated Input current	OC1-3.3SC1224u1	4/5 [mA]Typ.	10/11 [mA]Typ.
	OC1-05SC1224u1	5/3 [mA]Typ.	10/11 [mA]Typ.
	OC1-06SC1224u1	5/3 [mA]Typ.	10/11 [mA]Typ.
	OC1-3.3SC2448u1	4/5 [mA]Typ.	11/13 [mA]Typ.
	OC1-05SC2448u1	2/2 [mA]Typ.	11/13 [mA]Typ.
	OC1-06SC2448u1	2/2 [mA]Typ.	11/13 [mA]Typ.
	OC1-09SC2448u1	3/2 [mA]Typ.	11/13 [mA]Typ.
	OC1-12SC2448u1	4/4 [mA]Typ.	12/13 [mA]Typ.
	OC1-15SC2448u1	6/4 [mA]Typ.	12/13 [mA]Typ.
	OC1-24SC48u1	4 [mA]Typ.	14 [mA]Typ.
Input current when RC is OFF	OC1-3.3SC1224u1	0.2/0.56 [mA]Typ.	1/2 [μA]Typ.
	OC1-05SC1224u1	0.24/0.6 [mA]Typ.	1/2 [μA]Typ.
	OC1-06SC1224u1	0.24/1.15 [mA]Typ.	1/2 [μA]Typ.
	OC1-3.3SC2448u1	0.39/0.9 [mA]Typ.	2/5 [μA]Typ.
	OC1-05SC2448u1	0.42/0.93 [mA]Typ.	2/5 [μA]Typ.
	OC1-06SC2448u1	0.42/0.92 [mA]Typ.	2/5 [μA]Typ.
	OC1-09SC2448u1	0.37/0.9 [mA]Typ.	2/5 [μA]Typ.
	OC1-12SC2448u1	0.34/1.47 [mA]Typ.	2/5 [μA]Typ.
	OC1-15SC2448u1	0.27/1.50 [mA]Typ.	2/5 [μA]Typ.
	OC1-24SC48u1	0.56 [mA]Typ.	5 [μA]Typ.
Input current reakage ripple voltage	OC1-3.3SC1224u1	1000/1000[mVp-p]Typ.	500/500[mVp-p]Typ.
	OC1-05SC1224u1	1000/1000[mVp-p]Typ.	700/700[mVp-p]Typ.
	OC1-06SC1224u1	1000/1000[mVp-p]Typ.	700/700[mVp-p]Typ.
	OC1-3.3SC2448u1	700/1000[mVp-p]Typ.	500/500[mVp-p]Typ.
	OC1-05SC2448u1	1000/1300[mVp-p]Typ.	700/700[mVp-p]Typ.
	OC1-06SC2448u1	1200/1800[mVp-p]Typ.	700/700[mVp-p]Typ.
	OC1-09SC2448u1	1500/2000[mVp-p]Typ.	700/700[mVp-p]Typ.
	OC1-12SC2448u1	1500/2000[mVp-p]Typ.	800/800[mVp-p]Typ.
	OC1-15SC2448u1	1500/2500[mVp-p]Typ.	900/900[mVp-p]Typ.
	OC1-24SC48u1	3000[mVp-p]Typ.	1000[mVp-p]Typ.

Efficiency	OC1-3.3SC1224u1	78/75 [%]Typ.	84/81 [%]Typ.
	OC1-05SC1224u1	84/82 [%]Typ.	89/87 [%]Typ.
	OC1-06SC1224u1	86/84 [%]Typ.	90/88 [%]Typ.
	OC1-3.3SC2448u1	74/69 [%]Typ.	79/74 [%]Typ.
	OC1-05SC2448u1	81/78 [%]Typ.	85/82 [%]Typ.
	OC1-06SC2448u1	84/80 [%]Typ.	87/83 [%]Typ.
	OC1-09SC2448u1	88/85 [%]Typ.	90/87 [%]Typ.
	OC1-12SC2448u1	91/88 [%]Typ.	93/90 [%]Typ.
	OC1-15SC2448u1	93/90 [%]Typ.	95/92 [%]Typ.
	OC1-24SC48u1	93 [%]Typ.	95 [%]Typ.
Dynamic Load Voltage	OC1-3.3SC1224u1	±500[mV]Max.	±500[mV]Max.
	OC1-05SC1224u1	±600[mV]Max.	±1000[mV]Max.
	OC1-06SC1224u1	±600[mV]Max.	±1000[mV]Max.
	OC1-3.3SC2448u1	±500[mV]Max.	±500[mV]Max.
	OC1-05SC2448u1	±600[mV]Max.	±1000[mV]Max.
	OC1-06SC2448u1	±600[mV]Max.	±1000[mV]Max.
	OC1-09SC2448u1	±600[mV]Max.	±1500[mV]Max.
	OC1-12SC2448u1	±1000[mV]Max.	±1500[mV]Max.
	OC1-15SC2448u1	±1000[mV]Max.	±1500[mV]Max.
	OC1-24SC48u1	±400[mV]Max.	±1500[mV]Max.
Remote Control (Add voltage ON)	All model	ON when 4.5-56V	ON when 2.8-56V
Remote Control Current	All model	150～1800 [μA]	5～500 [μA]
Block Diagram	All model		See attached

OCEAN CHIPS
Океан Электроники
Поставка электронных компонентов

Компания «Океан Электроники» предлагает заключение долгосрочных отношений при поставках импортных электронных компонентов на взаимовыгодных условиях!

Наши преимущества:

- Поставка оригинальных импортных электронных компонентов напрямую с производств Америки, Европы и Азии, а так же с крупнейших складов мира;
- Широкая линейка поставок активных и пассивных импортных электронных компонентов (более 30 млн. наименований);
- Поставка сложных, дефицитных, либо снятых с производства позиций;
- Оперативные сроки поставки под заказ (от 5 рабочих дней);
- Экспресс доставка в любую точку России;
- Помощь Конструкторского Отдела и консультации квалифицированных инженеров;
- Техническая поддержка проекта, помощь в подборе аналогов, поставка прототипов;
- Поставка электронных компонентов под контролем ВП;
- Система менеджмента качества сертифицирована по Международному стандарту ISO 9001;
- При необходимости вся продукция военного и аэрокосмического назначения проходит испытания и сертификацию в лаборатории (по согласованию с заказчиком);
- Поставка специализированных компонентов военного и аэрокосмического уровня качества (Xilinx, Altera, Analog Devices, Intersil, Interpoint, Microsemi, Actel, Aeroflex, Peregrine, VPT, Syfer, Eurofarad, Texas Instruments, MS Kennedy, Miteq, Cobham, E2V, MA-COM, Hittite, Mini-Circuits, General Dynamics и др.);

Компания «Океан Электроники» является официальным дистрибьютором и эксклюзивным представителем в России одного из крупнейших производителей разъемов военного и аэрокосмического назначения **«JONHON»**, а так же официальным дистрибьютором и эксклюзивным представителем в России производителя высокотехнологичных и надежных решений для передачи СВЧ сигналов **«FORSTAR»**.

AVIC JONHON

«JONHON» (основан в 1970 г.)

Разъемы специального, военного и аэрокосмического назначения:

(Применяются в военной, авиационной, аэрокосмической, морской, железнодорожной, горно- и нефтедобывающей отраслях промышленности)

«FORSTAR» (основан в 1998 г.)

ВЧ соединители, коаксиальные кабели, кабельные сборки и микроволновые компоненты:

(Применяются в телекоммуникациях гражданского и специального назначения, в средствах связи, РЛС, а так же военной, авиационной и аэрокосмической отраслях промышленности).

FORSTAR®

Телефон: 8 (812) 309-75-97 (многоканальный)
Факс: 8 (812) 320-03-32
Электронная почта: ocean@oceanchips.ru
Web: http://oceanchips.ru/
Адрес: 198099, г. Санкт-Петербург, ул. Калинина, д. 2, корп. 4, лит. А