SCGB & SCGBK Series

Wakefield Vette offers the SCGB/SCGBK series of standard off the shelf grounding busbar and kits for various applications. These are variations of UL Listed ground bar kits of different bar sizes, hole sizes, and lug configurations in addition to the many standard kits in stock.

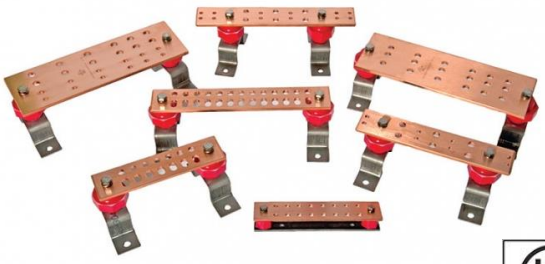

Wakefield-Vette can fully customize an order to serve any application, whether it be custom hole patterns for a unique lug shape, an irregular bar size, plating, etc. The mounting brackets that are used are stainless steel, *which significantly increases the part's useful life*. The use of stainless steel also protects the brackets from corrosion.

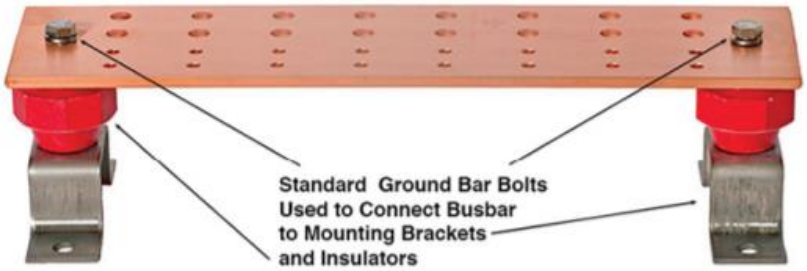

Part Number Configurator:

Series-	Part Number-	Finish-
SCGB- Ground Bar	**1-12**	**B**-Bare
SCGB-XKT- Ground Bar Kit		**T**-Tin
		N-Nickel
		S-Silver

SCGB- Ground Bar

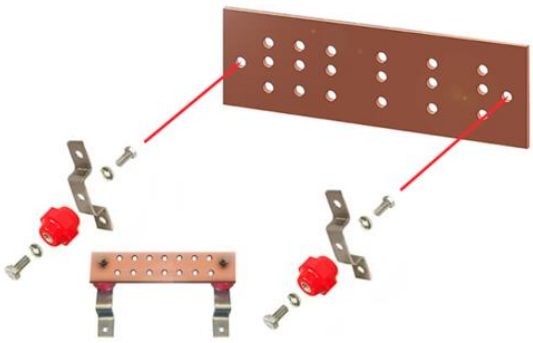

SCGBKT- Ground Bar Kit

Grounding Bus Bars and Kits

Summary Of Standard Offerings

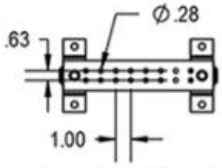

SCGB-1 - 2" x 10" w/16 Holes

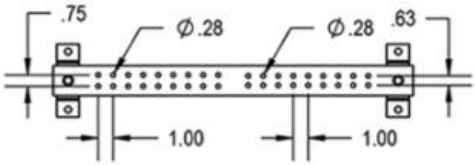

SCGB-2 - 2" x 24" w/36-Holes

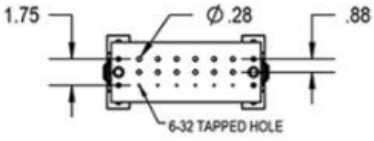

SCGB-3 - 4" x 10" w/16-Holes w/ 6 taps

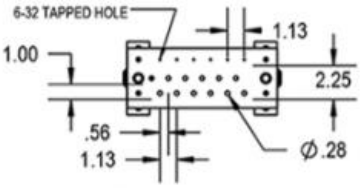

SCGB-4 - 4" x 10" 18 Holes Offset w /6 Taps

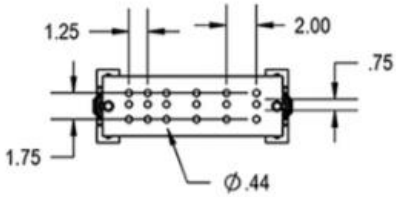

SCGB-5 - 4" x 12" w/18 Holes

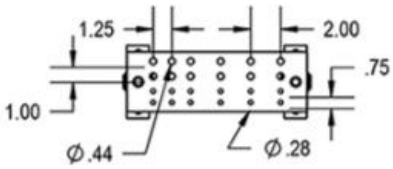

SCGB-6 - 4" x 12" 24 Holes w/6 Taps

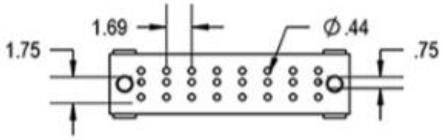

SCGB-7 - 4" x 16" 24 Holes in 3 Rows of 8

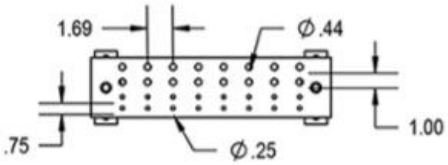

SCGB-8 - 4" x 16" 34 Holes w/34 Taps

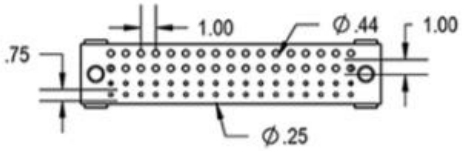

SCGB-9 4" x 20" 34 Holes w/34 Taps

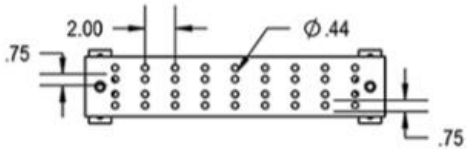

SCGB-10 - 4" x 20" 36 Holes in 4 Rows of 9

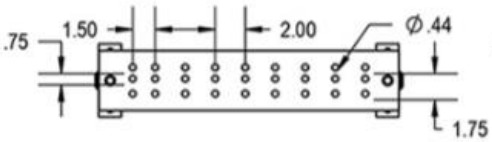

SCGB-11 - 4" x 20" 27 Holes in 3 Rows of 9

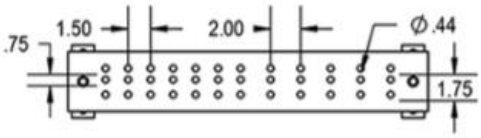

SCGB-12 - 4" x 24" 36 Holes in 4 Rows of 12

*** Note plating option is bare on these specifications.**

SCGB-1

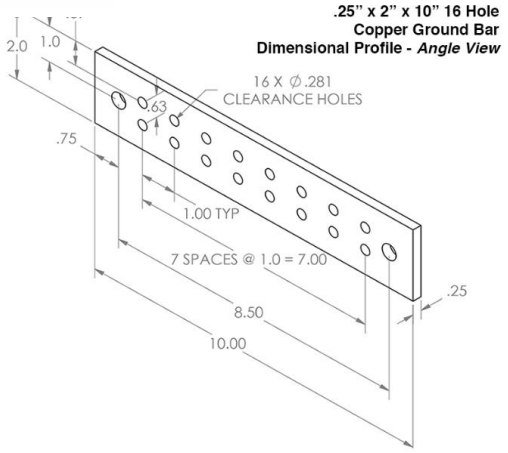

- Weight: 1.61lb
- Length: 10"
- Width: 2"
- Thickness: .25"
- Edge: Square Edge - Deburred
- Shape: Rectangle
- Material: Copper Sheet/Plate C110 H02 (Half Hard) Temper
- Amps: Meets requirements for an ampacity range of 550 to 599, for 60 Hz current
- Plating: Tin, Nickel and Silver Available
- Part Type: Grounding bus bar
- UL Certification: UL GROUNDING and BONDING EQUIPMENT - USA KDER.E326023

SCGB-1KT

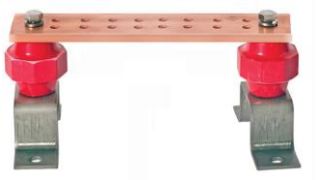

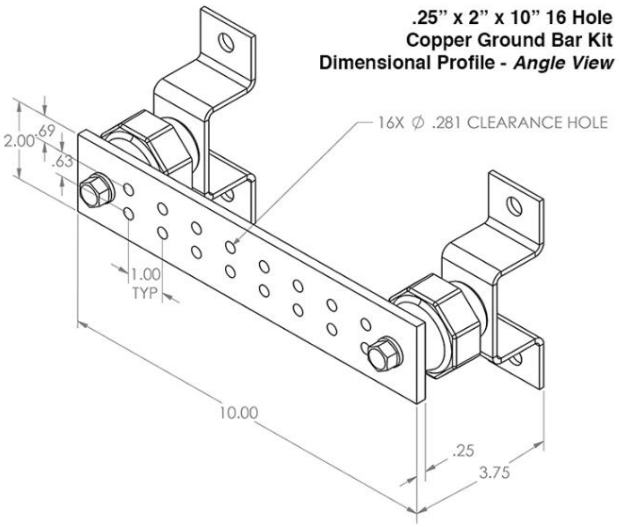

- Weight: 2.7lb
- Length: 10"
- Width: 2"
- Height: 4"
- Thickness: .25"
- Edge: Square Edge - Deburred
- Shape: Rectangle
- Material: Copper Sheet/Plate C110 H02 (Half Hard) Temper
- Plating: Tin, Nickel and Silver Available
- Part Type: Grounding bus bar
- Brand: Storm Power Components
- UL Certification: UL GROUNDING and BONDING EQUIPMENT - USA KDER.E326023; CANADA KDER7.E326023

- <u>Kit Includes:</u>
- (1) Tin Plated Copper bar (SCGB-1)
- (2) UL Recognized Polyester Standoff Insulators
- (3) Stainless Steel Mounting Brackets
- (4) 3/8" Stainless Steel Bolts
- (5) 3/8" Stainless Steel Lock Washers

*** Note plating option is bare on these specifications.**

SCGB-2

- Weight: 3.87lb
- Length: 24"
- Width: 2"
- Thickness: .25"
- Edge: Square Edge - Deburred
- Shape: Rectangle
- Material: Copper Sheet/Plate C110 H02 (Hard) Temper
- Plating: Tin, Nickel and Silver Available
- Part Type: Grounding bus bar
- UL Certification: UL GROUNDING and BONDING EQUIPMENT - USA KDER.E326023; ISO 9001-2008

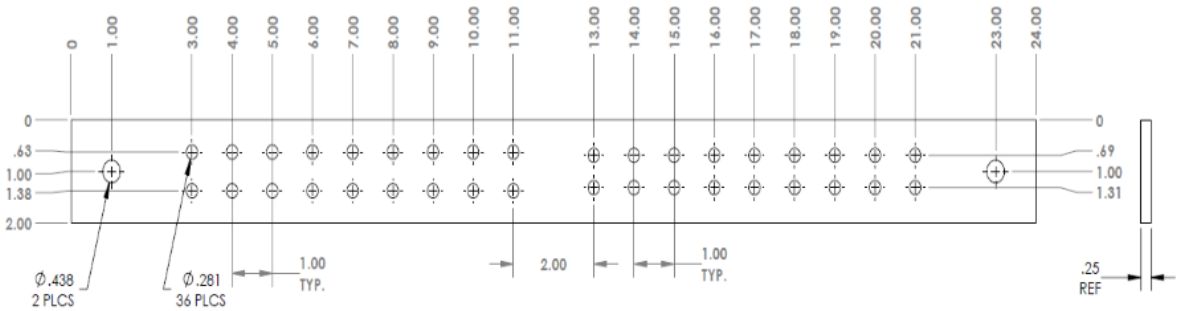

SCGB-2KT

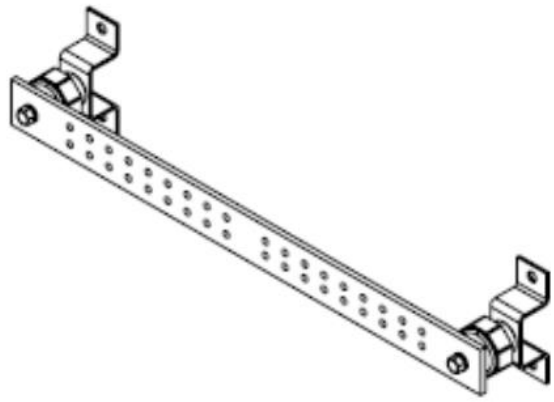

- Weight: 6lb
- Length: 24"
- Width: 2"
- Height: 4"
- Thickness: .25"
- Edge: Square Edge - Deburred
- Shape: Rectangle
- Material: Copper Sheet/Plate C110 H02 (Half Hard) Temper
- Plating: Tin, Nickel and Silver Available
- Part Type: Grounding bus bar
- UL Certification: UL GROUNDING and BONDING EQUIPMENT - USA KDER.E326023; CANADA KDER7.E326023; ISO 9001-2015

Kit Includes:

(1) Copper bar (SCGB-2)
(2) UL Recognized Polyester Standoff Insulators
(3) (2) Stainless Steel Mounting Brackets
(4) (4) 3/8" Stainless Steel Bolts
(5) (4) 3/8" Stainless Steel Lock Washers

*** Note plating option is bare on these specifications.**

SCGB-3

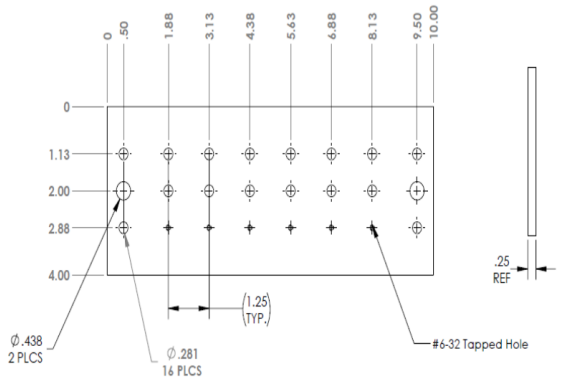

- Weight: 3.22lb
- Length: 10"
- Width: 4"
- Thickness: .25"
- Edge: Square Edge - Deburred
- Shape: Rectangle
- Material: Copper Sheet/Plate C110 H02 (Half Hard) Temper
- Plating: Tin, Nickel and Silver Available
- Part Type: Grounding bus bar
- UL Certification: UL GROUNDING and BONDING EQUIPMENT - USA KDER.E326023

SCGB-3KT

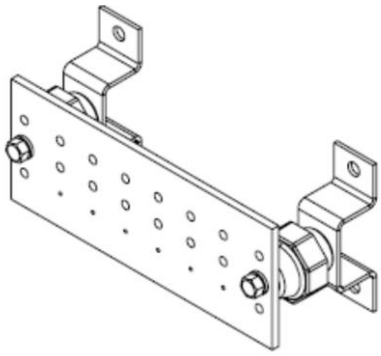

- Weight: 4.48lb
- Length: 10"
- Width: 4"
- Height: 4"
- Thickness: .25"
- Edge: Square Edge - Deburred
- Shape: Rectangle
- Material: Copper Sheet/Plate C110 H02 (Hard) Temper
- Plating: Tin, Nickel and Silver Available
- Part Type: Grounding bus bar
- UL Certification: UL GROUNDING and BONDING EQUIPMENT - USA KDER.E326023; CANADA KDER7.E326023; ISO 9001-2008
- Kit Includes:
- Copper bar (SCGB-3)
- UL Recognized Polyester Standoff Insulators
- Stainless Steel Mounting Brackets
- 3/8" Stainless Steel Bolts
- 3/8" Stainless Steel Lock Washers

*** Note plating option is bare on these specifications.**

SCGB-4

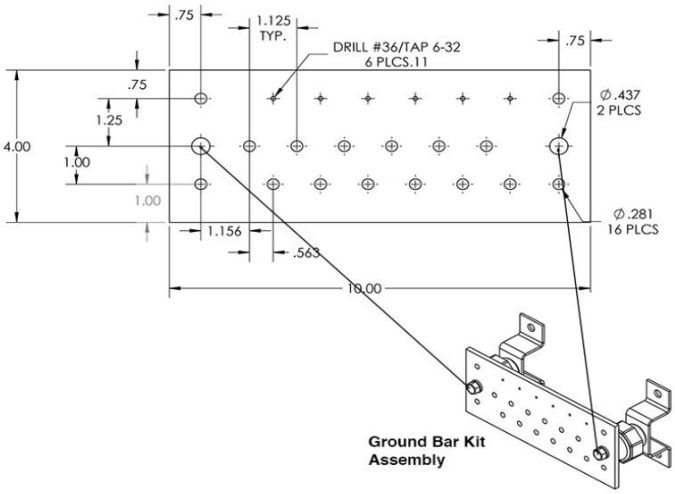

- Weight: 3.22lb
- Length: 10"
- Width: 4"
- Height: 0.25"
- Thickness: .25"
- Edge: Square Edge - Deburred
- Shape: Rectangle
- Material: Copper Sheet/Plate C110 H02 (Half Hard) Temper
- Plating: Tin, Nickel and Silver Available
- Part Type: Grounding bus bar
- UL Certification: UL GROUNDING and BONDING EQUIPMENT - USA KDER.E326023; ISO 9001-2008

SCGB-KT4

- Weight: 6.89lb
- Length: 10"
- Width: 4"
- Height: 4"
- Thickness: .25"
- Edge: Square Edge - Deburred
- Shape: Rectangle
- Material: Copper Sheet/Plate C110 H02 (Half Hard) Temper
- Plating: Tin, Nickel and Silver Available
- Part Type: Grounding bus bar
- UL Certification: UL GROUNDING and BONDING EQUIPMENT - USA KDER.E326023; ISO 9001-2008
- Kit Includes:
- Copper bar (SCGB-4)
- UL Recognized Polyester Standoff Insulators
- Stainless Steel Mounting Brackets
- 3/8" Stainless Steel Bolts
- 3/8" Stainless Steel Lock Washers

*** Note plating option is bare on these specifications.**

SCGB-5

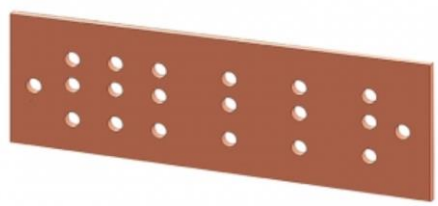

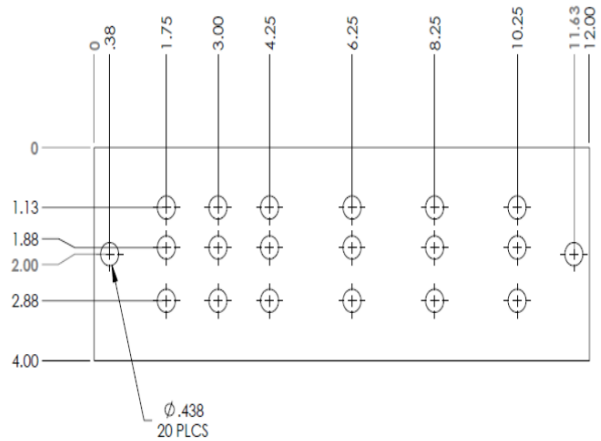

- Weight: 3.88lb
- Length: 12"
- Width: 4"
- Thickness: .25"
- Edge: Square Edge - Deburred
- Shape: Rectangle
- Material: Copper Sheet/Plate C110 H02 (Half Hard) Temper
- Plating: Tin, Nickel and Silver Available
- Part Type: Grounding bus bar
- UL Certification: UL GROUNDING and BONDING EQUIPMENT - USA KDER.E326023; ISO 9001-2008

SCGB-5KT

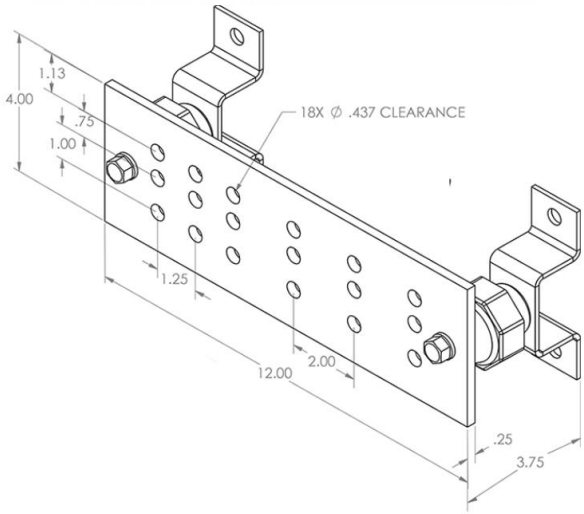

- Weight: 5.15lb
- Length: 12"
- Width: 4"
- Height: 4"
- Thickness: .25"
- Edge: Square Edge - Deburred
- Shape: Rectangle
- Material: Copper Sheet/Plate C110 H02 (Half Hard) Temper
- Plating: Tin, Nickel and Silver Available
- Part Type: Grounding bus bar
- UL Certification: UL GROUNDING and BONDING EQUIPMENT - USA KDER.E326023; ISO 9001-2008
- Kit Includes:
- Copper bar (SCGB-5)
- UL Recognized Polyester Standoff Insulators
- Stainless Steel Mounting Brackets
- 3/8" Stainless Steel Bolts
- 3/8" Stainless Steel Lock Washers

*** Note plating option is bare on these specifications.**

SCGB-6

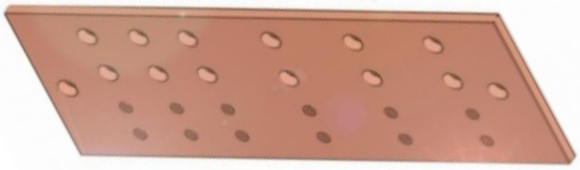

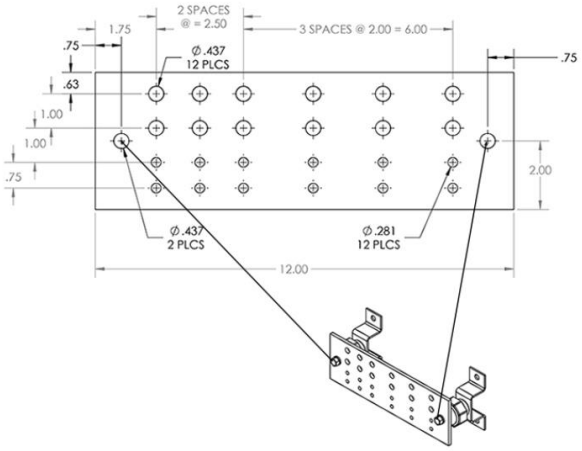

- Weight: 3.88lb
- Length: 12"
- Width: 4"
- Thickness: .25"
- Edge: Square Edge - Deburred
- Shape: Rectangle
- Material: Copper Sheet/Plate C110 H02 (Half Hard) Temper
- Plating: Tin, Nickel and Silver Available
- Part Type: Grounding bus bar
- UL Certification: UL GROUNDING and BONDING EQUIPMENT - USA KDER.E326023; ISO 9001-2008

SCGB-6KT

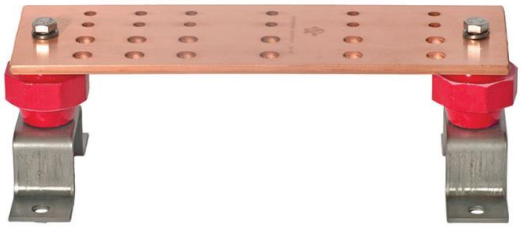

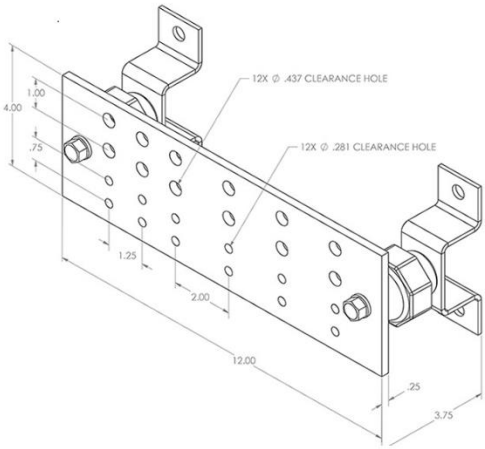

- Weight: 5.15lb
- Length: 12"
- Width: 4"
- Height: 4"
- Thickness: .25"
- Edge: Square Edge - Deburred
- Shape: Rectangle
- Material: Copper Sheet/Plate C110 H02 (Half Hard) Temper
- Plating: Tin, Nickel and Silver Available
- Part Type: Grounding bus bar
- UL Certification: UL GROUNDING and BONDING EQUIPMENT - USA KDER.E326023; ISO 9001-2008
- Pattern Type: WX2500412
- Kit Includes:
- Copper bar (SCGB-6)
- UL Recognized Polyester Standoff Insulators
- Stainless Steel Mounting Brackets
- 3/8" Stainless Steel Bolts
- 3/8" Stainless Steel Lock Washers

*** Note plating option is bare on these specifications.**

SCGB-7

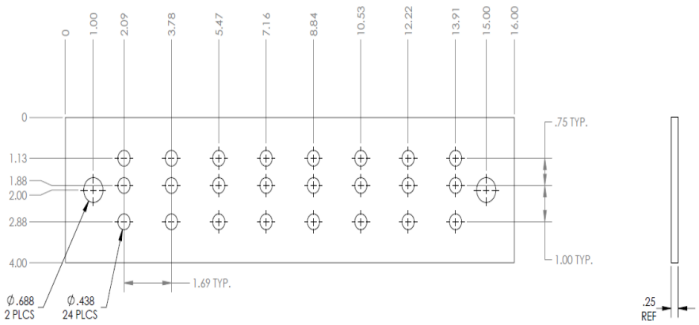

- Weight: 5.15lb
- Length: 16"
- Width: 4"
- Thickness: .25"
- Edge: Square Edge - Deburred
- Shape: Rectangle
- Material: Copper Sheet/Plate C110 H02 (Half Hard) Temper
- Plating: Tin, Nickel and Silver Available
- Part Type: Grounding bus bar
- UL Certification: UL GROUNDING and BONDING EQUIPMENT - USA KDER.E326023; ISO 9001-2008

SCGB-7KT

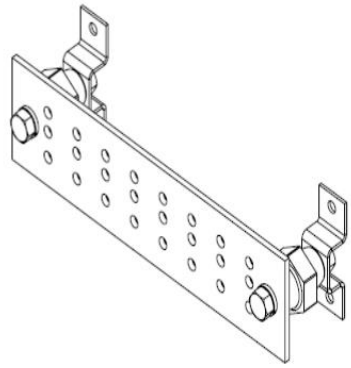

- Weight: 6.75lb
- Length: 16"
- Width: 4"
- Height: 4"
- Thickness: .25"
- Edge: Square Edge - Deburred
- Shape: Rectangle
- Material: Copper Sheet/Plate C110 H02 (Half Hard) Temper
- Amps: Meets requirements for an ampacity up to 1250 amps with 60 Hertz
- Plating: Tin, Nickel and Silver Available
- Part Type: Grounding bus bar
- UL Certification: UL GROUNDING and BONDING EQUIPMENT - USA KDER.E326023
- Kit Includes:
- Copper bar (SCGB-7)
- UL Recognized Polyester Standoff Insulators
- Stainless Steel Mounting Brackets
- 5/8" Stainless Steel Bolts
- 5/8" Stainless Steel Lock Washers

*** Note plating option is bare on these specifications.**

SCGB-8

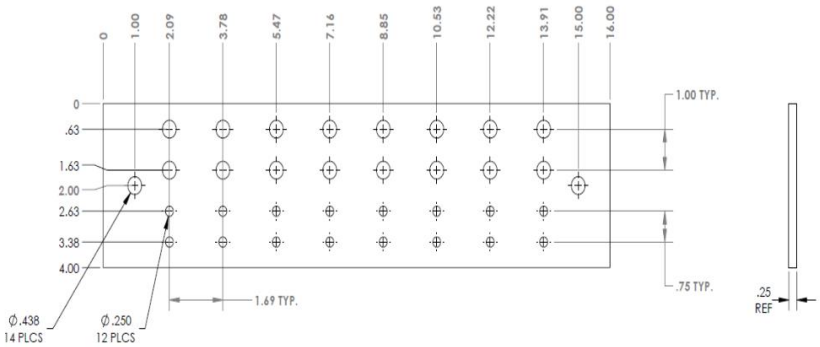

- Weight: 5.15lb
- Length: 16"
- Width: 4"
- Thickness: .25"
- Edge: Square Edge - Deburred
- Shape: Rectangle
- Material: Copper Sheet/Plate C110 H02 (Half Hard) Temper
- Amps: 1250 Amps using 60 Hz
- Plating: Tin, Nickel and Silver Available
- Part Type: Grounding bus bar
- UL Certification: UL GROUNDING and BONDING EQUIPMENT - USA KDER.E326023; ISO 9001-2008

SCGB-8KT

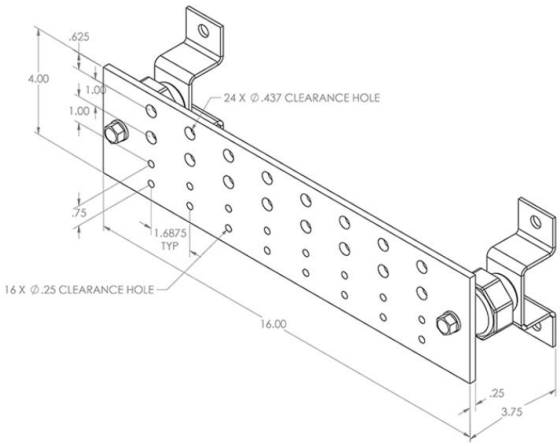

- Weight: 6.75lb
- Length: 16"
- Width: 4"
- Height: 4"
- Thickness: .25"
- Edge: Square Edge - Deburred
- Shape: Rectangle
- Material: Copper Sheet/Plate C110 H02 (Half Hard) Temper
- Plating: Tin, Nickel and Silver Available
- Part Type: Grounding bus bar
- UL Certification: UL GROUNDING and BONDING EQUIPMENT - USA KDER.E326023; ISO 9001-2008
- Kit Includes:
- Copper bar (SCGB-8)
- UL Recognized Polyester Standoff Insulators
- Stainless Steel Mounting Brackets
- 3/8" Stainless Steel Bolts
- 3/8" Stainless Steel Lock Washers

*** Note plating option is bare on these specifications.**

SCGB-9

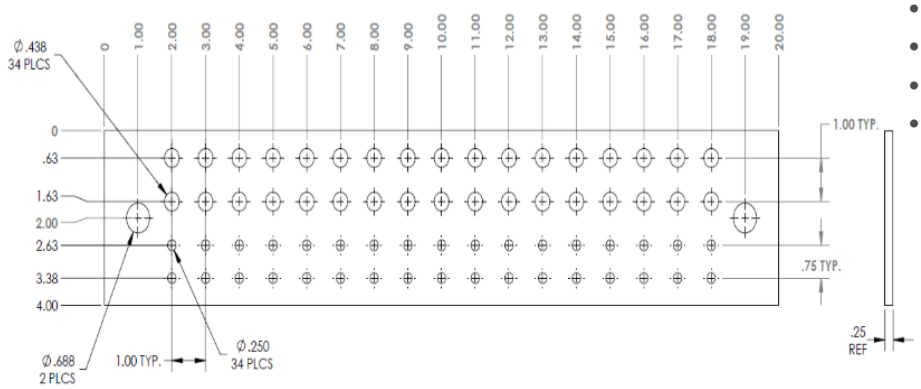

- Weight: 6.44lb
- Length: 20"
- Width: 4"
- Thickness: .25"
- Edge: Square Edge - Deburred
- Shape: Rectangle
- Material: Copper Sheet/Plate C110 H02 (Half Hard) Temper
- Amps: 1250 Amps using 60 Hz
- Plating: Tin, Nickel and Silver Available
- Part Type: Grounding bus bar
- UL Certification: UL GROUNDING and BONDING EQUIPMENT - USA KDER.E326023; ISO 9001-2008

SCGB-9KT

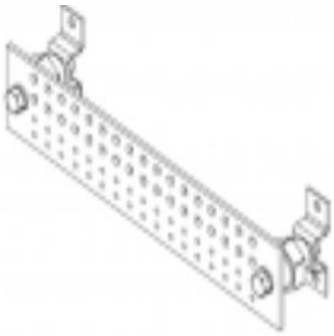

- Weight: 8lb
- Length: 20"
- Width: 4"
- Height: 4"
- Thickness: .25"
- Edge: Square Edge - Deburred
- Shape: Rectangle
- Material: Copper Sheet/Plate C110 H02 (Half Hard) Temper
- Plating: Tin, Nickel and Silver Available
- Part Type: Grounding bus bar
- UL Certification: UL GROUNDING and BONDING EQUIPMENT - USA KDER.E326023; ISO 9001-2008
- Kit Includes:
- Copper bar (SCGB-9)
- UL Recognized Polyester Standoff Insulators
- Stainless Steel Mounting Brackets
- 3/8" Stainless Steel Bolts
- 3/8" Stainless Steel Lock Washers (3/8 LOCK)

*** Note plating option is bare on these specifications.**

SCGB-10

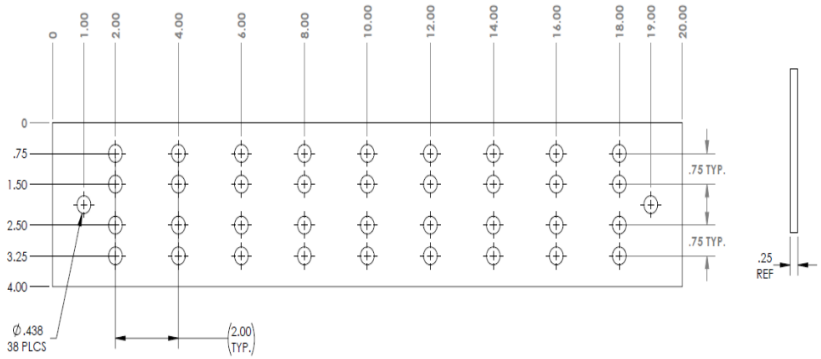

- Weight: 6.44lb
- Length: 20"
- Width: 4"
- Thickness: .25"
- Edge: Square Edge - Deburred
- Shape: Rectangle
- Material: Copper Sheet/Plate C110 H02 (Half Hard) Temper
- Plating: Tin, Nickel and Silver Available
- Part Type: Grounding bus bar
- UL Certification: UL GROUNDING and BONDING EQUIPMENT - USA KDER.E326023; ISO 9001-2008

SCGB-10KT

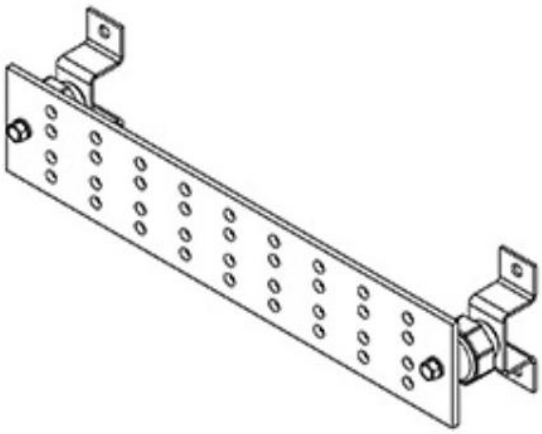

- Weight: 8lb
- Length: 20"
- Width: 4"
- Height: 4"
- Thickness: .25"
- Edge: Square Edge - Deburred
- Shape: Rectangle
- Material: Copper Sheet/Plate C110 H02 (Half Hard) Temper
- Plating: Tin, Nickel and Silver Available
- Part Type: Grounding bus bar
- UL Certification: UL GROUNDING and BONDING EQUIPMENT - USA KDER.E326023; ISO 9001-2008
- Pattern Type: WY2500420
- Kit Includes:
- Copper bar (SCGB-10)
- UL Recognized Polyester Standoff Insulators
- Stainless Steel Mounting Brackets
- 3/8" Stainless Steel Bolts
- 3/8" Stainless Steel Lock Washers

*** Note plating option is bare on these specifications.**

SCGB-11

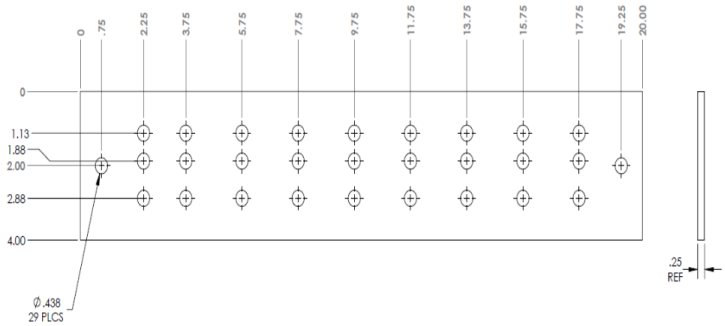

- Weight: 6.44lb
- Length: 20"
- Width: 4"
- Thickness: .25"
- Edge: Square Edge - Deburred
- Shape: Rectangle
- Material: Copper Sheet/Plate C110 H02 (Half Hard) Temper
- Plating: Tin, Nickel and Silver Flash Available
- Part Type: Grounding bus bar
- Brand: Storm Power Components
- UL Certification: UL GROUNDING and BONDING EQUIPMENT - USA KDER.E326023; ISO 9001-2008

SCGB-11KT

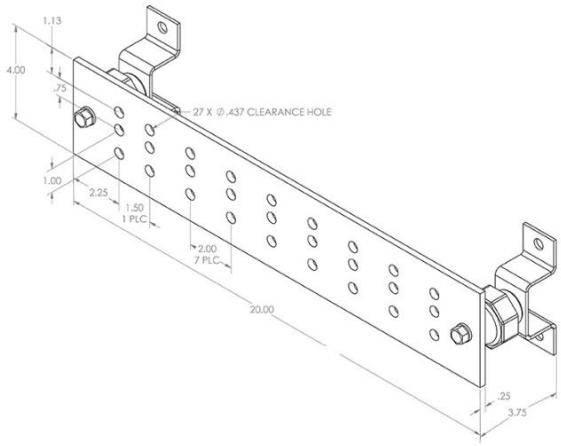

- Weight: 8lb
- Length: 20"
- Width: 4"
- Height: 4"
- Thickness: .25"
- Edge: Square Edge - Deburred
- Shape: Rectangle
- Material: Copper Sheet/Plate C110 H02 (Half Hard) Temper
- Plating: Tin Electroplated - Full Immersion
- Part Type: Grounding bus bar
- UL Certification: UL GROUNDING and BONDING EQUIPMENT - USA KDER.E326023; ISO 9001-2008
- Pattern Type: CZ2500420
- Kit Includes:
- Tin Plated Copper bar (SCGB-11-T)
- UL Recognized Polyester Standoff Insulators
- Stainless Steel Mounting Brackets
- 3/8" Stainless Steel Bolts
- 3/8" Stainless Steel Lock Washers

*** Note plating option is bare on these specifications.**

SCGB-12

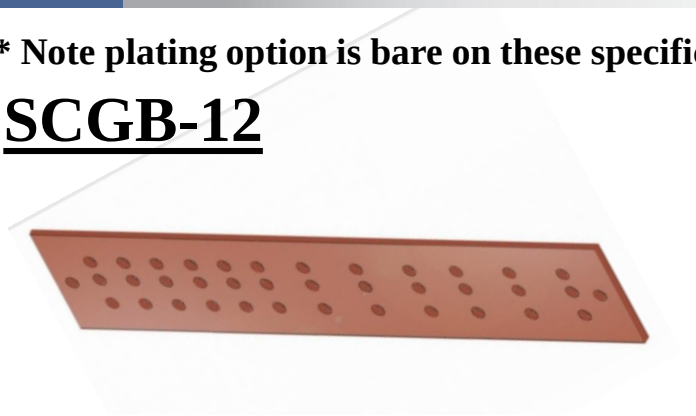

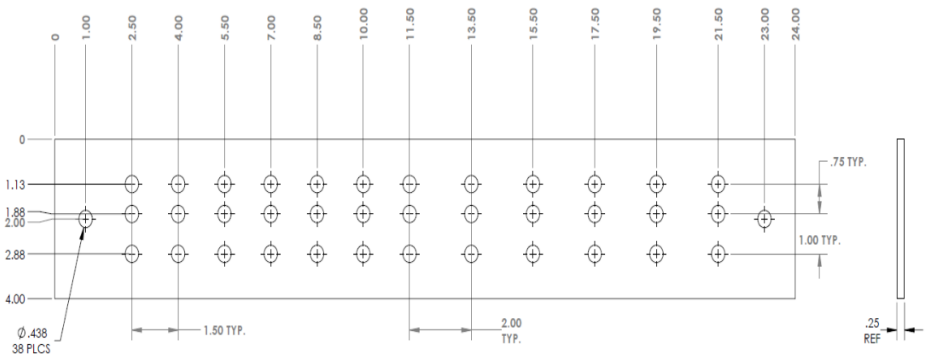

- Weight: 7.728lb
- Length: 24"
- Width: 4"
- Thickness: .25"
- Edge: Square Edge - Deburred
- Shape: Rectangle
- Material: Copper Sheet/Plate C110 H02 (Half Hard) Temper
- Plating: Tin, Nickel and Silver Available
- Part Type: Grounding bus bar
- UL Certification: UL GROUNDING and BONDING EQUIPMENT - USA KDER.E326023; ISO 9001-2008

SCGB-12KT

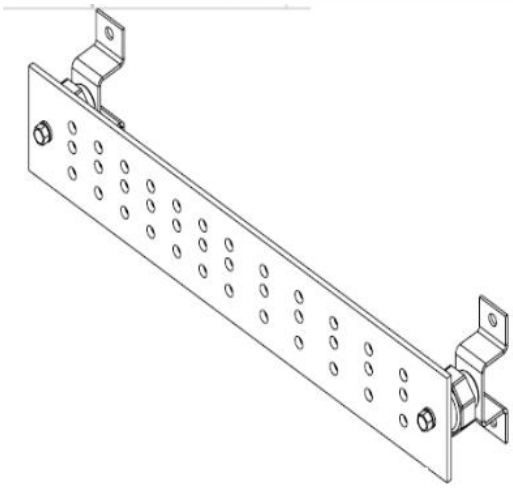

- Weight: 10.25lb
- Length: 24"
- Width: 4"
- Height: 4"
- Thickness: .25"
- Edge: Square Edge - Deburred
- Shape: Rectangle
- Material: Copper Sheet/Plate C110 H02 (Half Hard) Temper
- Plating: Tin, Nickel and Silver Available
- Part Type: Grounding bus bar
- UL Certification: UL GROUNDING and BONDING EQUIPMENT - USA KDER.E326023; ISO 9001-2008
- Pattern Type: CZ2500424
- <u>Kit Includes:</u>
- Tin Plated Copper bar (SCGB-12)
- UL Recognized Polyester Standoff Insulators
- Stainless Steel Mounting Brackets
- 3/8" Stainless Steel Bolts
- 3/8" Stainless Steel Lock Washers

OCEAN CHIPS
Океан Электроники
Поставка электронных компонентов

Компания «Океан Электроники» предлагает заключение долгосрочных отношений при поставках импортных электронных компонентов на взаимовыгодных условиях!

Наши преимущества:

- Поставка оригинальных импортных электронных компонентов напрямую с производств Америки, Европы и Азии, а так же с крупнейших складов мира;
- Широкая линейка поставок активных и пассивных импортных электронных компонентов (более 30 млн. наименований);
- Поставка сложных, дефицитных, либо снятых с производства позиций;
- Оперативные сроки поставки под заказ (от 5 рабочих дней);
- Экспресс доставка в любую точку России;
- Помощь Конструкторского Отдела и консультации квалифицированных инженеров;
- Техническая поддержка проекта, помощь в подборе аналогов, поставка прототипов;
- Поставка электронных компонентов под контролем ВП;
- Система менеджмента качества сертифицирована по Международному стандарту ISO 9001;
- При необходимости вся продукция военного и аэрокосмического назначения проходит испытания и сертификацию в лаборатории (по согласованию с заказчиком);
- Поставка специализированных компонентов военного и аэрокосмического уровня качества (Xilinx, Altera, Analog Devices, Intersil, Interpoint, Microsemi, Actel, Aeroflex, Peregrine, VPT, Syfer, Eurofarad, Texas Instruments, MS Kennedy, Miteq, Cobham, E2V, MA-COM, Hittite, Mini-Circuits, General Dynamics и др.);

Компания «Океан Электроники» является официальным дистрибьютором и эксклюзивным представителем в России одного из крупнейших производителей разъемов военного и аэрокосмического назначения **«JONHON»**, а так же официальным дистрибьютором и эксклюзивным представителем в России производителя высокотехнологичных и надежных решений для передачи СВЧ сигналов **«FORSTAR»**.

AVIC JONHON

«JONHON» (основан в 1970 г.)

Разъемы специального, военного и аэрокосмического назначения:

(Применяются в военной, авиационной, аэрокосмической, морской, железнодорожной, горно- и нефтедобывающей отраслях промышленности)

«FORSTAR» (основан в 1998 г.)

ВЧ соединители, коаксиальные кабели, кабельные сборки и микроволновые компоненты:

(Применяются в телекоммуникациях гражданского и специального назначения, в средствах связи, РЛС, а так же военной, авиационной и аэрокосмической отраслях промышленности).

FORSTAR®

Телефон: 8 (812) 309-75-97 (многоканальный)
Факс: 8 (812) 320-03-32
Электронная почта: ocean@oceanchips.ru
Web: http://oceanchips.ru/
Адрес: 198099, г. Санкт-Петербург, ул. Калинина, д. 2, корп. 4, лит. А