CCS C Compiler Manual

PCB / PCM / PCH

May 2015

ALL RIGHTS RESERVED.
Copyright Custom Computer Services, Inc. 2015

Table of Contents

Overview 1
C Compiler....1
PCB, PCM and PCH Overview....1
Installation 1
Technical Support....2
Directories 2
File Formats....3
Invoking the Command Line Compiler....3
PCW Overview 5
Menu 6
Editor Tabs 7
Slide Out Windows 7
Editor 8
Debugging Windows....8
Status Bar....9
Output Messages 9
Program Syntax 11
Overall Structure....11
Comment....11
Trigraph Sequences 12
Multiple Project Files 12
Multiple Compilation Units 13
Full Example Program 13
Statements....15
Statements 15
if....15
while 16
do-while 16
for 17
switch 17
return 18
goto 18
label....18
break 18
continue....19
expr 19
; 19
stmt....20
Expressions 21
Constants 21
Identifiers....22
Operators....22
Operator Precedence 23
Data Definitions....25
Data Definitions 25
Type Specifiers....25
Type Qualifiers 26
Enumerated Types 27
Structures and Unions 27
typedef....28
Non-RAM Data Definitions 29
Using Program Memory for Data 30
Named Registers....31
Function Definition 33
Function Definition....33
Overloaded Functions 33
Reference Parameters 34
Default Parameters....34
Variable Argument Lists 35

Functional Overview....37
I2C....37
ADC....37
Analog Comparator....39
CAN Bus....39
CCP....41
Code Profile....42
Configuration Memory....43
DAC....43
Data Eeprom....44
Data Signal Modulator....45
External Memory....45
General Purpose I/O....46
Internal LCD....47
Internal Oscillator....47
Interrupts....48
Low Voltage Detect....49
PMP/EPMP....49
Power PWM....50
Program Eeprom....51
PSP....52
QEI....53
RS232 I/O....54
RTOS....56
SPI....57
Timer0....58
Timer1....59
Timer2....59
Timer3....60
Timer4....60
Timer5....60
TimerA....61
TimerB....61
USB....62
Voltage Reference....64
WDT or Watch Dog Timer....65
interrupt_enabled()....66
Stream I/O....66
PreProcessor....69
PRE-PROCESSOR DIRECTORY....69
__address__....71
_attribute_x....71
#asm #endasm #asm asis....72
#bit....73
__buildcount__....74
#build....74
#byte....75
#case....75
date....76
#define....76
definedinc....77
#device....78
device....79
#if expr #else #elif #endif....80
#error....81
#export (options)....81
__file__....83
__filename__....83
#fill_rom....83
#fuses....84
#hexcomment....84
#id....85

#if expr #else #elif #endif 85
#ifdef #ifndef #else #elif #endif 86
#ignore_warnings 87
#import (options)....87
#include 88
#inline 88
#int_xxxx 89
#INT_DEFAULT 92
#int_global 92
__line__ 92
#list 93
#line 93
#locate 94
#module 94
#nolist 95
#ocs 95
#opt 96
#org 96
#pin_select 97
__pcb__ 99
__pcm__ 99
__pch__ 99
#pragma 100
#priority 100
#profile 100
#reserve 101
#rom 102
#separate 102
#serialize 103
#task 104
__time__ 105
#type 105
#undef 106
_unicode 106
#use capture 107
#use delay 108
#use dynamic_memory 109
#use fast_io 109
#use fixed_io 110
#use i2c 110
#use profile() 111
#use pwm 112
#use rs232 113
#use rtos 116
#use spi 117
#use standard_io 118
#use timer 119
#use touchpad 120
#warning 121
#word 121
#zero_ram 122
Built-in Functions 123
BUILT-IN FUNCTIONS 123
abs( ) 129
sin( ) cos( ) tan( ) asin( ) acos() atan() sinh() cosh() tanh() atan2() 129
adc_done( ) 130
assert( ) 131
atoe 131
atof( ) 132
pin_select() 132
atoi( ) atol( ) atoi32( ) 133
at_clear_interrupts( ) 134

at_disable_interrupts( ) 134
at_enable_interrupts( ) 135
at_get_capture( ) 136
at_get_missing_pulse_delay( ) 136
at_get_period( ) 137
at_get_phase_counter( ) 137
at_get_resolution( ) 138
at_get_set_point( ) 138
at_get_set_point_error( ) 139
at_get_status( ) 139
at_interrupt_active( ) 140
at_set_compare_time( ) 141
at_set_missing_pulse_delay( ) 141
at_set_resolution( ) 142
at_set_set_point( ) 142
at_setup_cc( ) 143
bit_clear( ) 143
bit_set( ) 144
bit_test( ) 144
brownout_enable( ) 145
bsearch( ) 145
calloc( ) 146
ceil( ) 146
clc1_setup_gate() clc2_setup_gate() clc3_setup_gate() clc4_setup_gate() 147
clc1_setup_input() clc2_setup_input() clc3_setup_input() clc4_setup_input() 148
clear_interrupt( ) 148
cog_status( ) 149
cog_restart( ) 149
crc_calc( ) 150
crc_calc8( ) 150
crc_calc16( ) 150
) 150
crc_init(mode) 151
cwg_status( ) 151
cwg_restart( ) 151
dac_write( ) 152
delay_cycles( ) 152
delay_ms( ) 153
delay_us( ) 153
disable_interrupts( ) 154
div( ) ldiv( ) 155
enable_interrupts( ) 155
erase_eeprom( ) 156
erase_program_eeprom( ) 156
exp( ) 157
ext_int_edge( ) 158
fabs( ) 158
getc( ) getch( ) getchar( ) fgetc( ) 159
gets( ) fgets( ) 159
floor( ) 160
fmod( ) 160
printf( ) fprintf( ) 161
putc( ) putchar( ) fputc( ) 162
puts( ) fputs( ) 163
free( ) 163
frexp( ) 164
scanf( ) 164
get_capture( ) 166
get_capture_event() 167
get_capture_time() 167
get_capture32() 168
get_hspwm_capture( ) 168

get_nco_accumulator( ) 169
get_nco_inc_value( ) 169
get_ticks( ) 170
get_timerA( ) 170
get_timerB( ) 170
get_timerx( ) 171
get_tris_x( ) 172
getenv( ) 172
gets( ) fgets( ) 176
goto_address( ) 176
high_speed_adc_done( ) 177
i2c_init( ) 177
i2c_isr_state( ) 178
i2c_poll( ) 179
i2c_read( ) 179
i2c_slaveaddr( ) 180
i2c_speed( ) 180
i2c_start( ) 181
i2c_stop( ) 181
i2c_write( ) 182
input( ) 183
input_change_x( ) 183
input_state( ) 184
input_x( ) 185
interrupt_active( ) 185
isalnum(char) isalpha(char) 186
iscntrl(x) isdigit(char) 186
isgraph(x) islower(char) isspace(char) isupper(char) isxdigit(char) isprint(x) ispunct(x) 186
isamong( ) 187
itoa( ) 187
jump_to_isr( ) 188
kbhit( ) 188
label_address( ) 189
labs( ) 189
lcd_contrast( ) 190
lcd_load( ) 190
lcd_symbol( ) 191
ldexp( ) 191
log( ) 192
log10( ) 192
longjmp( ) 193
make8( ) 193
make16( ) 194
make32( ) 194
malloc( ) 195
memcpy( ) memmove( ) 195
memset( ) 196
modf( ) 196
_mul( ) 197
nargs( ) 197
offsetof( ) offsetofbit( ) 198
output_x( ) 199
output_bit( ) 199
output_drive( ) 200
output_float( ) 201
output_high( ) 201
output_low( ) 202
output_toggle( ) 202
perror( ) 203
pid_busy( ) 203
pid_get_result( ) 204
pid_read( ) 204

pid_write( ) 205
port_x_pullups ( ) 206
pow( ) pwr( ) 207
printf( ) fprintf( ) 207
profileout() 208
psp_output_full( ) psp_input_full( ) psp_overflow( ) 209
putc( ) putchar( ) fputc( ) 210
putc_send( );..... 211
fputc_send( );..... 211
puts( ) fputs( ) 211
pwm_off()..... 212
pwm_on()..... 212
pwm_set_duty() 213
pwm_set_duty_percent 213
pwm_set_frequency 214
qei_get_count( ) 215
qei_set_count( ) 215
qei_status( ) 215
qsort( ) 216
rand( ) 217
rcv_buffer_bytes( ) 217
rcv_buffer_full( ) 218
read_adc( ) 218
read_bank( ) 219
read_calibration( ) 219
read_configuration_memory( ) 220
read_eeprom( ) 220
read_extended_ram( ) 221
read_program_memory( ) 221
read_external_memory( ) 221
read_high_speed_adc( ) 222
read_program_eeprom( ) 223
read_rom_memory( ) 224
read_sd_adc( ) 224
realloc( ) 224
release_io()..... 225
reset_cpu( ) 225
restart_cause( ) 226
restart_wdt( ) 226
rotate_left( ) 227
rotate_right( ) 228
rtc_alarm_read( ) 228
rtc_alarm_write( ) 229
rtc_read( ) 229
rtc_write( ) 230
rtos_await( ) 230
rtos_disable( ) 231
rtos_enable( ) 231
rtos_msg_poll( ) 231
rtos_msg_read( ) 232
rtos_msg_send( ) 232
rtos_overrun( ) 233
rtos_run( ) 233
rtos_signal( ) 234
rtos_stats( ) 234
rtos_terminate( ) 235
rtos_wait( ) 235
rtos_yield( ) 236
set_adc_channel( ) 236
set_analog_pins( ) 237
scanf( ) 237
set_cog_blanking( ) 239

set_cog_dead_band( ) 240
set_cog_phase( ) 240
set_compare_time( ) 241
set_hspwm_duty( ) 241
set_hspwm_event( ) 242
set_hspwm_override( ) 243
set_hspwm_phase( ) 243
set_nco_inc_value( ) 244
set_power_pwm_override( ) 245
set_power_pwmx_duty( ) 245
set_pullup( ) 246
set_pwm1_duty( ) set_pwm2_duty( ) set_pwm3_duty( ) set_pwm4_duty( ) set_pwm5_duty( ) 246
set_rtcc( ) set_timer0( ) set_timer1( ) set_timer2( ) set_timer3( ) set_timer4( ) set_timer5( ) 247
set_ticks( ) 248
setup_sd_adc_calibration( ) 248
set_sd_adc_channel( ) 249
set_timerA( ) 249
set_timerB( ) 250
set_timerx( ) 250
set_rtcc( ) set_timer0( ) set_timer1( ) set_timer2( ) set_timer3( ) set_timer4( ) set_timer5( ) 251
set_tris_x( ) 251
set_uart_speed( ) 252
setjmp( ) 253
setup_adc(mode) 253
setup_adc_ports( ) 254
setup_adc_reference( ) 254
setup_at( ) 255
setup_ccp1( ) setup_ccp2( ) setup_ccp3( ) setup_ccp4( ) setup_ccp5( ) setup_ccp6( ) 255
setup_clc1() setup_clc2() setup_clc3() setup_clc4() 257
setup_comparator( ) 257
setup_counters( ) 258
setup_cog( ) 259
setup_crc( ) 259
setup_cwg( ) 260
setup_dac( ) 261
setup_external_memory( ) 261
setup_high_speed_adc( ) 262
setup_high_speed_adc_pair( ) 262
setup_hspwm_blanking( ) 263
setup_hspwm_chop_clock( ) 264
setup_hspwm_trigger( ) 264
setup_hspwm_unit( ) 265
setup_hspwm( ) 266
setup_hspwm_unit_chop_clock( ) 266
setup_lcd( ) 267
setup_low_volt_detect( ) 268
setup_nco( ) 268
setup_opamp1( ) setup_opamp2( ) 269
setup_opamp1( ) setup_opamp2( ) 269
setup_oscillator( ) 270
setup_pid( ) 270
setup_pmp(option,address_mask) 271
setup_power_pwm( ) 272
setup_power_pwm_pins( ) 273
setup_psp(option,address_mask) 273
setup_pwm1( ) setup_pwm2( ) setup_pwm3( ) setup_pwm4( ) 274
setup_qei( ) 275
setup_rtc( ) 275
setup_rtc_alarm( ) 276
setup_sd_adc( ) 276
setup_smtx( ) 277
setup_spi( ) setup_spi2( ) 278

setup_timer_A( ) 278
setup_timer_B( ) 279
setup_timer_0( ) 279
setup_timer_1( ) 280
setup_timer_2( ) 280
setup_timer_3( ) 281
setup_timer_4( ) 281
setup_timer_5( ) 282
setup_uart( ) 282
setup_vref( ) 283
setup_wdt( ) 283
setup_zdc( ) 284
shift_left( ) 284
shift_right( ) 285
sleep( ) 285
sleep_ulpwu( ) 286
smtx_read( ) 287
smtx_reset_timer( ) 288
smtx_start( ) 288
smtx_status( ) 288
smtx_stop( ) 289
smtx_write( ) 289
smtx_update( ) 290
spi_data_is_in( ) spi_data_is_in2( ) 290
spi_init() 291
spi_prewrite(data); 291
spi_read( ) spi_read2( ) 292
spi_read_16() 292
spi_read2_16() 292
spi_read3_16() 292
spi_read4_16() 292
spi_speed 293
spi_write( ) spi_write2( ) 293
spi_xfer( ) 294
SPII_XFER_IN() 295
sprintf( ) 295
sqrt( ) 296
srand( ) 296
STANDARD STRING FUNCTIONS( ) memchr( ) memcmp( ) strcat( ) strchr( ) strcmp( ) strcoll( )
strcspn( ) strerror( ) stricmp( ) strlen( ) strlwr( ) strncat( ) strncmp( ) strncpy( ) strpbrk( ) strrchr( )
strspn( ) strstr( ) strxfrm( ) 297
strcpy( ) strcopy( ) 298
strtod( ) 298
strtok( ) 299
strtol( ) 300
strtoul( ) 300
swap( ) 301
tolower( ) toupper( ) 301
touchpad_getc( ) 302
touchpad_hit( ) 303
touchpad_state( ) 303
tx_buffer_available() 304
tx_buffer_bytes() 304
tx_buffer_full( ) 305
va_arg( ) 306
va_end( ) 306
va_start 307
write_bank( ) 307
write_configuration_memory( ) 308
write_eeprom( ) 308
write_external_memory( ) 309
write_extended_ram( ) 310

write_program_eeprom( ) 310
write_program_memory( ) 310
zdc_status( ) 312
Standard C Include Files 313
errno.h 313
float.h 313
limits.h 314
locale.h 314
setjmp.h 314
stddef.h 315
stdio.h 315
stdlib.h 315
Error Messages 317
Compiler Error Messages 317
Compiler Warning Messages 325
Compiler Warning Messages 325
Common Questions & Answers 327
How are type conversions handled? 327
How can a constant data table be placed in ROM? 328
How can I use two or more RS-232 ports on one PIC®? 328
How can the RB interrupt be used to detect a button press? 329
How do I directly read/write to internal registers? 329
How do I do a printf to a string? 330
How do I get getc() to timeout after a specified time? 330
How do I put a NOP at location 0 for the ICD? 331
How do I wait only a specified time for a button press? 331
How do I write variables to EEPROM that are not a byte? 331
How does one map a variable to an I/O port? 332
How does the compiler determine TRUE and FALSE on expressions? 333
How does the PIC® connect to a PC? 333
How does the PIC® connect to an I2C device? 334
How much time do math operations take? 334
Instead of 800, the compiler calls 0. Why? 335
Instead of A0, the compiler is using register 20. Why? 335
What can be done about an OUT OF RAM error? 336
What is an easy way for two or more PICs® to communicate? 336
What is an easy way for two or more PICs® to communicate? 337
What is the format of floating point numbers? 338
Why does the .LST file look out of order? 339
Why does the compiler show less RAM than there really is? 339
Why does the compiler use the obsolete TRIS? 340
Why is the RS-232 not working right? 340
Example Programs 343
EXAMPLE PROGRAMS 343
Software License Agreement 363
SOFTWARE LICENSE AGREEMENT 363
Index 365

OVERVIEW

C Compiler

PCB, PCM and PCH Overview

Technical Support

Directories

File Formats

Invoking the Command Line Compiler

PCB, PCM and PCH Overview

The PCB, PCM, and PCH are separate compilers. PCB is for 12-bit opcodes, PCM is for 14-bit opcodes, and PCH is for 16-bit opcode PIC® microcontrollers. Due to many similarities, all three compilers are covered in this reference manual. Features and limitations that apply to only specific microcontrollers are indicated within. These compilers are specifically designed to meet the unique needs of the PIC® microcontroller. This allows developers to quickly design applications software in a more readable, high-level language.

IDE Compilers (PCW, PCWH and PCWHD) have the exclusive C Aware integrated development environment for compiling, analyzing and debugging in real-time. Other features and integrated tools can be viewed here.

When compared to a more traditional C compiler, PCB, PCM, and PCH have some limitations. As an example of the limitations, function recursion is not allowed. This is due to the fact that the PIC® has no stack to push variables onto, and also because of the way the compilers optimize the code. The compilers can efficiently implement normal C constructs, input/output operations, and bit twiddling operations. All normal C data types are supported along with pointers to constant arrays, fixed point decimal, and arrays of bits.

Installation

Insert the CD ROM, select each of the programs you wish to install and follow the on-screen instructions.

If the CD does not auto start run the setup program in the root directory.

For help answering the version questions see the "Directories" Help topic.

Key Questions that may come up:

Keep Settings- Unless you are having trouble select this

Link Compiler Extensions- If you select this the file extensions like .c will start the compiler IDE when you double click on files with that extension. .hex files start the CCSLOAD program. This selection can be change in the IDE.

Install MP LAB Plug In- If you plan to use MPLAB and you don't select this you will need to download and manually install the Plug-In.

Install ICD2, ICD3...drivers-select if you use these microchip ICD units.

Delete Demo Files- Always a good idea

Install WIN8 APP- Allows you to start the IDE from the WIN8 Start Menu.

Technical Support

Compiler, software, and driver updates are available to download at:
http://www.ccsinfo.com/download

Compilers come with 30 or 60 days of download rights with the initial purchase. One year maintenance plans may be purchased for access to updates as released.

The intent of new releases is to provide up-to-date support with greater ease of use and minimal, if any, transition difficulty.

To ensure any problem that may occur is corrected quickly and diligently, it is recommended to send an email to: support@ccsinfo.com or use the Technical Support Wizard in PCW. Include the version of the compiler, an outline of the problem and attach any files with the email request. CCS strives to answer technical support timely and thoroughly.

Technical Support is available by phone during business hours for urgent needs or if email responses are not adequate. Please call 262-522-6500 x32.

Directories

The compiler will search the following directories for Include files.

- Directories listed on the command line
- Directories specified in the .CCSPJT file
- The same directory as the source.directories in the ccsc.ini file

By default, the compiler files are put in C:\Program Files\PICC and the example programs are in \PICC\EXAMPLES. The include files are in PICC\drivers. The device header files are in PICC\devices.

The compiler itself is a DLL file. The DLL files are in a DLL directory by default in \PICC\DLL.

It is sometimes helpful to maintain multiple compiler versions. For example, a project was tested with a specific version, but newer projects use a newer version. When installing the compiler you are prompted for what version to keep on the PC. IDE users can change versions using Help>about and clicking "other versions." Command Line users use start>all programs>PIC-C>compiler version.

Two directories are used outside the PICC tree. Both can be reached with start>all programs>PIC-C.

1.) A project directory as a default location for your projects. By default put in "My Documents." This is a good place for VISTA and up.

2.) User configuration settings and PCWH loaded files are kept in %APPDATA%\PICC

File Formats

.c	This is the source file containing user C source code.
.h	These are standard or custom header files used to define pins, register, register bits, functions and preprocessor directives.
.pjt	This is the older pre- Version 5 project file which contains information related to the project.
.ccspjt	This is the project file which contains information related to the project.
.lst	This is the listing file which shows each C source line and the associated assembly code generated for that line. The elements in the .LST file may be selected in PCW under Options>Project>Output Files CCS Basic — Standard assembly instructions with Opcodes — Includes the HEX opcode for each instruction Old Standard Symbolic — Shows variable names instead of addresses
.sym	This is the symbol map which shows each register location and what program variables are stored in each location.
.sta	The statistics file shows the RAM, ROM, and STACK usage. It provides information on the source codes structural and textual complexities using Halstead and McCabe metrics.
.tre	The tree file shows the call tree. It details each function and what functions it calls along with the ROM and RAM usage for each function.
.hex	The compiler generates standard HEX files that are compatible with all programmers. The compiler can output 8-bet hex, 16-bit hex, and binary files.
.cof	This is a binary containing machine code and debugging information. The debug files may be output as Microchip .COD file for MPLAB 1-5, Advanced Transdata .MAP file, expanded .COD file for CCS debugging or MPLAB 6 and up .xx .COF file. All file formats and extensions may be selected via Options File Associations option in Windows IDE.
.cod	This is a binary file containing debug information.
.rtf	The output of the Documentation Generator is exported in a Rich Text File format which can be viewed using the RTF editor or Wordpad.
.rvf	The Rich View Format is used by the RTF Editor within the IDE to view the Rich Text File.
.dgr	The .DGR file is the output of the flowchart maker.
.esym **.xsym**	These files are generated for the IDE users. The file contains Identifiers and Comment information. This data can be used for automatic documentation generation and for the IDE helpers.
.o	Relocatable object file
.osym	This file is generated when the compiler is set to export a relocatable object file. This file is a .sym file for just the one unit.
.err	Compiler error file
.ccsload	used to link Windows 8 apps to CCSLoad
.ccssiow	used to link Windows 8 apps to Serial Port Monitor

Invoking the Command Line Compiler

The command line compiler is invoked with the following command:

```
CCSC   [options]   [cfilename]
```

Valid options:

+FB	Select PCB (12 bit)	-D	Do not create debug file
+FM	Select PCM (14 bit)	+DS	Standard .COD format debug file
+FH	Select PCH (PIC18XXX)	+DM	.MAP format debug file
+Yx	Optimization level x (0-9)	+DC	Expanded .COD format debug file
		+DF	Enables the output of an COFF debug file.
+FS	Select SXC (SX)	+EO	Old error file format
+ES	Standard error file	-T	Do not generate a tree file
+T	Create call tree (.TRE)	-A	Do not create stats file (.STA)
+A	Create stats file (.STA)	-EW	Suppress warnings (use with +EA)
+EW	Show warning messages	-E	Only show first error
+EA	Show all error messages and all warnings	+EX	Error/warning message format uses GCC's "brief format" (compatible with GCC editor environments)

The xxx in the following are optional. If included it sets the file extension:

+LNxxx	Normal list file	+O8xxx	8-bit Intel HEX output file
+LSxxx	MPASM format list file	+OWxxx	16-bit Intel HEX output file
+LOxxx	Old MPASM list file	+OBxxx	Binary output file
+LYxxx	Symbolic list file	-O	Do not create object file
-L	Do not create list file		

+P	Keep compile status window up after compile
+Pxx	Keep status window up for xx seconds after compile
+PN	Keep status window up only if there are no errors
+PE	Keep status window up only if there are errors
+Z	Keep scratch files on disk after compile
+DF	COFF Debug file
I+="..."	Same as I="..." Except the path list is appended to the current list
I="..."	Set include directory search path, for example: I="c:\picc\examples;c:\picc\myincludes" If no I= appears on the command line the .PJT file will be used to supply the include file paths.
-P	Close compile window after compile is complete
+M	Generate a symbol file (.SYM)
-M	Do not create symbol file
+J	Create a project file (.PJT)
-J	Do not create PJT file
+ICD	Compile for use with an ICD
#xxx="yyy"	Set a global #define for id xxx with a value of yyy, example: #debug="true"
+Gxxx="yyy"	Same as #xxx="yyy"
+?	Brings up a help file
-?	Same as +?
+STDOUT	Outputs errors to STDOUT (for use with third party editors)
+SETUP	Install CCSC into MPLAB (no compile is done)
sourceline=	Allows a source line to be injected at the start of the source file. Example: CCSC +FM myfile.c sourceline="#include <16F887.h>"
+V	Show compiler version (no compile is done)
+Q	Show all valid devices in database (no compile is done)

A / character may be used in place of a + character. The default options are as follows:

+FM +ES +J +DC +Y9 -T -A +M +LNlst +O8hex -P -Z

If @filename appears on the CCSC command line, command line options will be read from the specified file. Parameters may appear on multiple lines in the file.

If the file CCSC.INI exists in the same directory as CCSC.EXE, then command line parameters are read from that file before they are processed on the command line.

Examples:

```
CCSC +FM C:\PICSTUFF\TEST.C
 CCSC +FM +P +T TEST.C
```

PCW Overview

The PCW IDE provides the user an easy to use editor and environment for developing microcontroller applications. The IDE comprises of many components, which are summarized below. For more information and details, use the Help>PCW in the compiler..

Many of these windows can be re-arranged and docked into different positions.

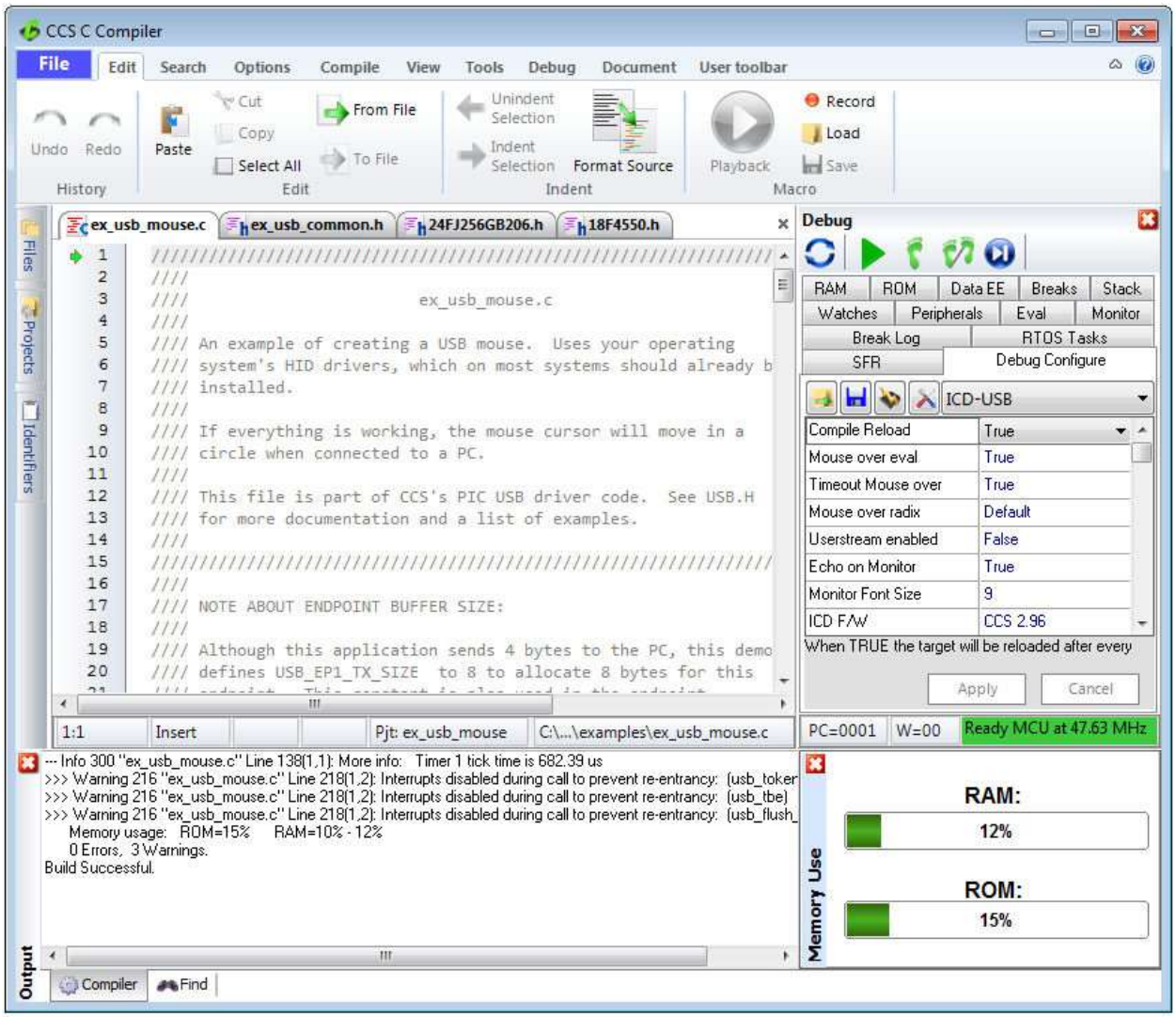

Menu

All of the IDE's functions are on the main menu. The main menu is divided into separate sections, click on a section title ('Edit', 'Search', etc) to change the section. Double clicking on the section, or clicking on the chevron on the right, will cause the menu to minimize and take less space.

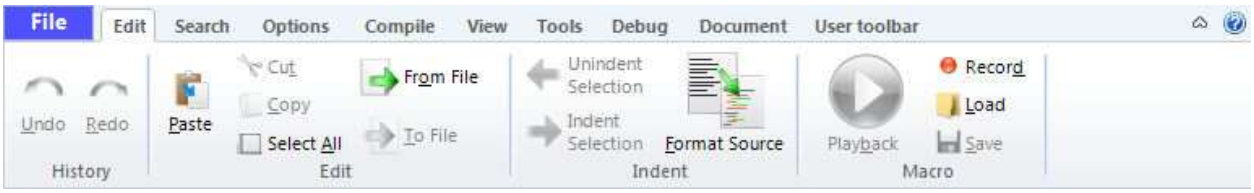

(click on image to go to link)

Editor Tabs

All of the open files are listed here. The active file, which is the file currently being edited, is given a different highlight than the other files. Clicking on the X on the right closes the active file. Right clicking on a tab gives a menu of useful actions for that file.

Slide Out Windows

'Files' shows all the active files in the current project. 'Projects' shows all the recent projects worked on. 'Identifiers' shows all the variables, definitions, prototypes and identifiers in your current project.

Editor

The editor is the main work area of the IDE and the place where the user enters and edits source code. Right clicking in this area gives a menu of useful actions for the code being edited.

```
100  #if defined(USB_HW_CCS_PIC18F4550)
101      #include <18F4550.h>
102      #fuses HSPLL,NOWDT,NOPROTECT,NOLVP,NODEBUG,USBDIV,PLL5,CPUDIV1,VREGEN
103      #use delay(clock=48000000)
104
105      //leds ordered from bottom to top
106      #DEFINE LED1 PIN_A5  //green
```

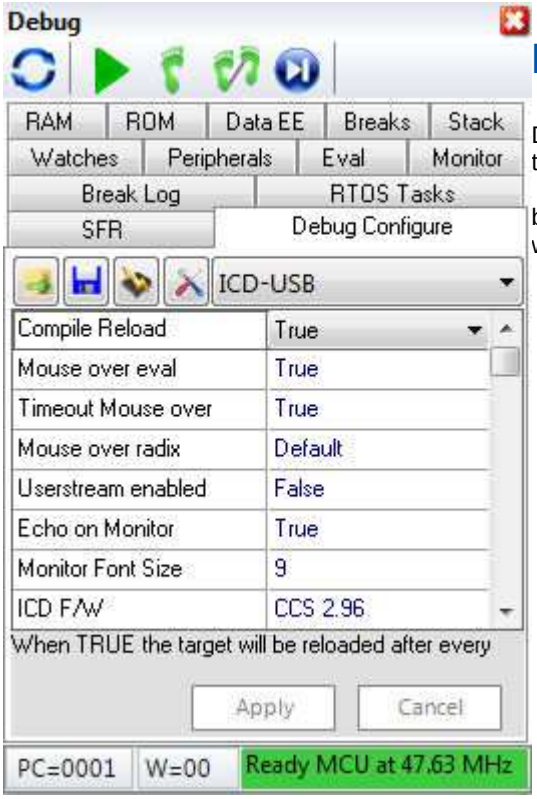

Debugging Windows

Debugger control is done in the debugging windows. These windows allow you set breakpoints, single step, watch variables and more.

Status Bar

The status bar gives the user helpful information like the cursor position, project open and file being edited.

Output Messages

Output messages are displayed here. This includes messages from the compiler during a build, messages from the programmer tool during programming or the results from find and searching.

PROGRAM SYNTAX

Overall Structure

A program is made up of the following four elements in a file:
Comment
Pre-Processor Directive
Data Definition
Function Definition
  Statements
  Expressions

Every C program must contain a main function which is the starting point of the program execution. The program can be split into multiple functions according to the their purpose and the functions could be called from main or the sub-functions. In a large project functions can also be placed in different C files or header files that can be included in the main C file to group the related functions by their category. CCS C also requires to include the appropriate device file using #include directive to include the device specific functionality. There are also some preprocessor directives like #fuses to specify the fuses for the chip and #use delay to specify the clock speed. The functions contain the data declarations,definitions,statements and expressions. The compiler also provides a large number of standard C libraries as well as other device drivers that can be included and used in the programs. CCS also provides a large number of built-in functions to access the various peripherals included in the PIC microcontroller.

Comment

Comments – Standard Comments
A comment may appear anywhere within a file except within a quoted string. Characters between /* and */ are ignored. Characters after a // up to the end of the line are ignored.

Comments for Documentation Generator
The compiler recognizes comments in the source code based on certain markups. The compiler recognizes these special types of comments that can be later exported for use in the documentation generator. The documentation generator utility uses a user selectable template to export these comments and create a formatted output document in Rich Text File Format. This utility is only available in the IDE version of the compiler. The source code markups are as follows.

Global Comments
These are named comments that appear at the top of your source code. The comment names are case sensitive and they must match the case used in the documentation template.
For example:
```
//*PURPOSE This program implements a Bootloader.
//*AUTHOR John Doe
```

A '//' followed by an * will tell the compiler that the keyword which follows it will be the named comment. The actual comment that follows it will be exported as a paragraph to the documentation generator.
Multiple line comments can be specified by adding a : after the *, so the compiler will not concatenate the comments that follow. For example:
```
/**:CHANGES
      05/16/06   Added PWM loop
      05/27.06   Fixed Flashing problem
*/
```

Variable Comments
A variable comment is a comment that appears immediately after a variable declaration. For example:

```
int seconds; // Number of seconds since last entry
long day,     // Current day of the month,   /* Current Month */
long year;      // Year
```

Function Comments
A function comment is a comment that appears just before a function declaration. For example:

```
// The following function initializes outputs
void function_foo()
{
        init_outputs();
}
```

Function Named Comments
The named comments can be used for functions in a similar manner to the Global Comments. These comments appear before the function, and the names are exported as-is to the documentation generator.
For example:

```
//*PURPOSE This function displays data in BCD format
void display_BCD( byte n)
{
        display_routine();
 }
```

Trigraph Sequences

The compiler accepts three character sequences instead of some special characters not available on all keyboards as follows:

Sequence	Same as
??=	#
??(	[
??/	\
??)	]
??'	^
??<	{
??!	|
??>	}
??-	~

Multiple Project Files

When there are multiple files in a project they can all be included using the #include in the main file or the sub-files to use the automatic linker included in the compiler. All the header files, standard libraries and driver files can be included using this method to automatically link them.

For example: if you have main.c, x.c, x.h, y.c,y.h and z.c and z.h files in your project, you can say in:

main.c

```
#include <device header file>
#include<x.c>
#include<y.c>
```

#include <z.c>

x.c #include <x.h>

y.c #include <y.h>

z.c #include <z.h>

In this example there are 8 files and one compilation unit. Main.c is the only file compiled.

Note that the #module directive can be used in any include file to limit the visibility of the symbol in that file.

To separately compile your files see the section "multiple compilation units".

Multiple Compilation Units

Multiple Compilation Units are only supported in the IDE compilers, PCW, PCWH, PCHWD and PCDIDE. When using multiple compilation units, care must be given that pre-processor commands that control the compilation are compatible across all units. It is recommended that directives such as #FUSES, #USE and the device header file all put in an include file included by all units. When a unit is compiled it will output a relocatable object file (*.o) and symbol file (*.osym).

There are several ways to accomplish this with the CCS C Compiler. All of these methods and example projects are included in the MCU.zip in the examples directory of the compiler.

Full Example Program

Here is a sample program with explanation using CCS C to read adc samples over rs232:

```
//////////////////////////////////////////////
/////////
///  This program displays the min and max of
30,   ///
///  comments that explains what the program
does,  ///
///  and A/D samples over the RS-232
interface.     ///
//////////////////////////////////////////////
/////////

#include <16F887.h>                        //
preprocessor directive that
                                           //
selects the chip PIC16F887
#fuses NOPROTECT                           //
Code protection turned off
#use delay(crystal=20mhz)                  //
preprocessor directive that
```

```
                                          //
specifies the clock type and speed
#use rs232(baud=9600, xmit=PIN_C6, rcv=PIN_C7) //
preprocessor directive that
                                          //
includes the rs232 libraries

void main() {                             //
main function
   int i, value, min, max;                //
local variable declaration
   printf("Sampling:");                   //
printf function included in the
                                          //
RS232 library
   setup_port_a( ALL_ANALOG );            //
A/D setup functions- built-in
   setup_adc( ADC_CLOCK_INTERNAL );       //
Internal clock always works
   set_adc_channel( 0 );                  //
Set channel to AN0
   do {                                   // do
forever statement
      min=255;
      max=0;
      for(i=0; i<=30; ++i) {              //
Take 30 samples
         delay_ms(100);                   //
Wait for a tenth of a second
         value = read_adc();              //
A/D read functions- built-in
         if(value<min)                    //
Find smallest sample
            min=value;
         if(value>max)                    //
Find largest sample
            max=value;
      }
      printf("\n\rMin: %2X  Max:
%2X\n\r",min,max);
   } while (TRUE);
}
```

STATEMENTS

Statements

STATEMENT	Example

if (expr) stmt; [else stmt;]	`if (x==25)`
	`  x=0;`
	`else`
	`  x=x+1;`

while (expr) stmt;	`while (get_rtcc()!=0)` `  putc('n');`

do stmt while (expr);	`do {`
	`  putc(c=getc());`
	`} while (c!=0);`

for (expr1;expr2;expr3) stmt;	`for (i=1;i<=10;++i)` `  printf("%u\r\n",i);`

switch (expr) {
case cexpr: stmt; //one or more case
[default:stmt]
... }
	`switch (cmd) {`
	`  case 0:  printf("cmd 0");break;`
	`  case 1: printf("cmd 1");break;`
	`  default: printf("bad cmd");break;`
	`}`

return [expr];	`return (5);`
goto label;	`goto loop;`
label: stmt;	`loop: i++;`
break;	`break;`
continue;	`continue;`
expr;	`i=1;`
;	`;`
{[stmt]} Zero or more	`{a=1;` ` b=1;}`
declaration;	`int i;`

Note: Items in [ ] are optional

if

if-else
The if-else statement is used to make decisions.
The syntax is:

if (expr)
  stmt-1;
[**else**

stmt-2;]

The expression is evaluated; if it is true stmt-1 is done. If it is false then stmt-2 is done.

else-if
This is used to make multi-way decisions.
The syntax is:

if (expr)
stmt;
[else if (expr)
stmt;]
...
[else
stmt;]

The expressions are evaluated in order; if any expression is true, the statement associated with it is executed and it terminates the chain. If none of the conditions are satisfied the last else part is executed.

Example:
```
if (x==25)
    x=1;
else
    x=x+1;
```

Also See: Statements

while

While is used as a loop/iteration statement.
The syntax is:

while (expr)
statement

The expression is evaluated and the statement is executed until it becomes false in which case the execution continues after the statement.

Example:
```
while (get_rtcc()!=0)
   putc('n');
```

Also See: Statements

do-while

do-while: Differs from *while* and *for* loop in that the termination condition is checked at the bottom of the loop rather than at the top and so the body of the loop is always executed at least once. The syntax is:

do
statement

while (expr);

The statement is executed; the expr is evaluated. If true, the same is repeated and when it becomes false the loop terminates.

Also See: Statements , While

for

For is also used as a loop/iteration statement.
The syntax is:

for (expr1;expr2;expr3)
statement

The expressions are loop control statements. expr1 is the initialization, expr2 is the termination check and expr3 is re-initialization. Any of them can be omitted.

Example:
```
for (i=1;i<=10;++i)
   printf("%u\r\n",i);
```

Also See: Statements

switch

Switch is also a special multi-way decision maker.
The syntax is

```
switch (expr) {
  case const1: stmt sequence;
               break;
  ...
  [default:stmt]
}
```

This tests whether the expression matches one of the constant values and branches accordingly.
If none of the cases are satisfied the default case is executed. The break causes an immediate exit, otherwise control falls through to the next case.

Example:
```
switch (cmd) {
    case 0:printf("cmd 0");
           break;
    case 1:printf("cmd 1");
           break;
    default:printf("bad cmd");
            break; }
```

Also See: Statements

return

return
A **return** statement allows an immediate exit from a switch or a loop or function and also returns a value.

The syntax is:

return(expr);

Example:
```
return (5);
```

Also See: Statements

goto

goto
The goto statement cause an unconditional branch to the label.

The syntax is:
goto label;

A label has the same form as a variable name, and is followed by a colon. The goto's are used sparingly, if at all.

Example:
```
goto loop;
```

Also See: Statements

label

label
The label a goto jumps to.
The syntax is:

label: stmnt;

Example:
```
loop: i++;
```

Also See: Statements

break

break.

The break statement is used to exit out of a control loop. It provides an early exit from while, for ,do and switch.
The syntax is

break;

It causes the innermost enclosing loop (or switch) to be exited immediately.

Example:
```
break;
```

Also See: Statements

continue

The **continue** statement causes the next iteration of the enclosing loop(While, For, Do) to begin.
The syntax is:

continue;

It causes the test part to be executed immediately in case of do and while and the control passes the re-initialization step in case of for.

Example:
```
continue;
```

Also See: Statements

expr

The syntax is:
expr**;**

Example:
```
i=1;
```

Also See: Statements

;

Statement: **;**

Example:
```
;
```

Also See: Statements

stmt

Zero or more semi-colon separated.
The syntax is:

{[stmt**]}**

Example:
```
{a=1;
 b=1;}
```

Also See: Statements

EXPRESSIONS

Constants

123	Decimal
123L	Forces type to & long (UL also allowed)
123LL	Forces type to & int32;
0123	Octal
0x123	Hex
0b010010	Binary
123.456	Floating Point
123F	Floating Point (FL also allowed)
123.4E-5	Floating Point in scientific notation
'x'	Character
'\010'	Octal Character
'\xA5'	Hex Character
'\c'	Special Character. Where c is one of: \n Line Feed - Same as \x0a \r Return Feed - Same as \x0d \t TAB - Same as \x09 \b Backspace - Same as \x08 \f Form Feed - Same as x0c \a Bell - Same as \x07 \v Vertical Space - Same as \x0b \? Question Mark - Same as \x3f \' Single Quote - Same as \x22 \" Double Quote - Same as \x22 \\ A Single Backslash - Same as \x5c
"abcdef"	String (null is added to the end)

Identifiers

ABCDE	Up to 32 characters beginning with a non-numeric. Valid characters are and _ (underscore). By default not case sensitive Use #CASE to turn on
ID[X]	Single Subscript
ID[X][X]	Multiple Subscripts
ID.ID	Structure or union reference
ID->ID	Structure or union reference

Operators

+	**Addition Operator**
+=	Addition assignment operator, x+=y, is the same as x=x+y
[ ]	Array subscrip operator
&=	Bitwise and assignment operator, x&=y, is the same as x=x&y
&	Address operator
&	Bitwise and operator
^=	Bitwise exclusive or assignment operator, x^=y, is the same as x=x^y
^	Bitwise exclusive or operator
I=	Bitwise inclusive or assignment operator, xI=y, is the same as x=xIy
I	Bitwise inclusive or operator
?:	Conditional Expression operator
- -	Decrement
/=	Division assignment operator, x/=y, is the same as x=x/y
/	Division operator
==	Equality
>	Greater than operator
>=	Greater than or equal to operator
++	Increment
*****	Indirection operator
!=	Inequality
<<=	Left shift assignment operator, x<<=y, is the same as x=x<<y
<	Less than operator
<<	Left Shift operator
<=	Less than or equal to operator
&&	Logical AND operator

!	Logical negation operator
II	Logical OR operator
.	Member operator for structures and unions
%=	Modules assignment operator x%=y, is the same as x=x%y
%	Modules operator
***=**	Multiplication assignment operator, x*=y, is the same as x=x*y
*****	Multiplication operator
~	One's complement operator
>>=	Right shift assignment, x>>=y, is the same as x=x>>y
>>	Right shift operator
->	Structure Pointer operation
-=	Subtraction assignment operator, x-=y, is the same as x=x- y
-	Subtraction operator
sizeof	Determines size in bytes of operand

See also: Operator Precedence

Operator Precedence

PIN DESCENDING PRECEDENCE				**Associativity**
(**expr**)	exor++	expr->expr	expr.expr	Left to Right
++**expr**	expr**++**	**- -**expr	expr **- -**	Left to Right
!**expr**	**~**expr	**+**expr	**-**expr	Right to Left
(**type**)**expr**	*****expr	**&**value	**sizeof**(type)	Right to Left
expr*expr	expr/expr	expr**%**expr		Left to Right
expr+**expr**	expr**-**expr			Left to Right
expr<<**expr**	expr**>>**expr			Left to Right
expr<**expr**	expr**<=**expr	expr**>**expr	expr**>=**expr	Left to Right
expr==expr	expr**!=**expr			Left to Right
expr&**expr**				Left to Right
expr^expr				Left to Right
expr | expr				Left to Right
expr&& **expr**				Left to Right
expr || expr				Left to Right
expr ?				Right to

expr: **expr**			Left
lvalue = expr	lvalue**+=**expr	lvalue**-=**expr	Right to Left
lvalue*=expr	lvalue**/=**expr	lvalue**%=**expr	Right to Left
lvalue>>=expr	lvalue**<<=**expr	lvalue**&=**expr	Right to Left
lvalue^=expr	lvalue**|=**expr		Right to Left
expr, expr			Left to Right

(Operators on the same line are equal in precedence)

DATA DEFINITIONS

Data Definitions

This section describes what the basic data types and specifiers are and how variables can be declared using those types. In C all the variables should be declared before they are used. They can be defined inside a function (local) or outside all functions (global). This will affect the visibility and life of the variables.

A declaration consists of a type qualifier and a type specifier, and is followed by a list of one or more variables of that type.
For example:

```
int a,b,c,d;
mybit e,f;
mybyte g[3][2];
char *h;
colors j;
struct data_record data[10];
static int i;
extern long j;
```

Variables can also be declared along with the definitions of the *special* types.
For example:

```
enum colors{red, green=2,blue}i,j,k;  // colors is the enum type and
i,j,k
                                      //are variables of that type
```

SEE ALSO:
Type Specifiers/ Basic Types
Type Qualifiers
Enumerated Types
Structures & Unions
typedef
Named Registers

Type Specifiers

Basic Types

Type-Specifier	Range			
	Size	Unsigned	Signed	Digits
int1	1 bit number	0 to 1	N/A	1/2
int8	8 bit number	0 to 255	-128 to 127	2-3
int16	16 bit number	0 to 65535	-32768 to 32767	4-5
int32	32 bit number	0 to 4294967295	-2147483648 to 2147483647	9-10

float32	32 bit float	-1.5×10^{45} to 3.4×10^{38}	7-8

C Standard Type	Default Type
short	int1
char	unsigned int8
int	int8
long	int16
long long	int32
float	float32
double	N/A

Note: All types, except float char , by default are un-signed; however, may be preceded by unsigned or signed (Except int64 may only be signed) . Short and long may have the keyword INT following them with no effect. Also see #TYPE to change the default size.

SHORT INT1 is a special type used to generate very efficient code for bit operations and I/O. Arrays of bits (INT1 or SHORT) in RAM are now supported. Pointers to bits are not permitted. The device header files contain defines for BYTE as an int8 and BOOLEAN as an int1.

Integers are stored in little endian format. The LSB is in the lowest address. Float formats are described in common questions.

SEE ALSO: Declarations, Type Qualifiers, Enumerated Types, Structures & Unions, typedef, Named Registers

Type Qualifiers

Type-Qualifier	
static	Variable is globally active and initialized to 0. Only accessible from this compilation unit.
auto	Variable exists only while the procedure is active. This is the default and AUTO need not be used.
double	Is a reserved word but is not a supported data type.
extern	External variable used with multiple compilation units. No storage is allocated. Is used to make otherwise out of scope data accessible. there must be a non-extern definition at the global level in some compilation unit.
register	Is allowed as a qualifier however, has no effect.
_ fixed(n)	Creates a fixed point decimal number where *n* is how many decimal places to implement.
unsigned	Data is always positive. This is the default data type if not specified.
signed	Data can be negative or positive.
volatile	Tells the compiler optimizer that this variable can be changed at any point during execution.
const	Data is read-only. Depending on compiler configuration, this qualifier may just make the data read-only -AND/OR- it may place the data into program memory to save space. (see #DEVICE const=)

rom	Forces data into program memory. Pointers may be used to this data but they can not be mixed with RAM pointers.
void	Built-in basic type. Type void is used to indicate no specific type in places where a type is required.
readonly	Writes to this variable should be dis-allowed
_bif	Used for compiler built in function prototypes on the same line
__attribute__	Sets various attributes

SEE ALSO: Declarations, Type Specifiers, Enumerated Types, Structures & Unions, typedef, Named Registers

Enumerated Types

enum enumeration type: creates a list of integer constants.

enum	**[id]**	**{ [id [= cexpr]] }**
		One or more comma separated

The id after **enum** is created as a type large enough to the largest constant in the list. The ids in the list are each created as a constant. By default the first id is set to zero and they increment by one. If a = cexpr follows an id that id will have the value of the constant expression an d the following list will increment by one.

For example:

```
enum colors{red, green=2, blue};          // red will be 0, green will be 2 and
                                          // blue will be 3
```

SEE ALSO: Declarations, Type Specifiers, Type Qualifiers, Structures & Unions, typedef, Named Registers

Structures and Unions

Struct structure type: creates a collection of one or more variables, possibly of different types, grouped together as a single unit.

struct**[*]** **[id]** **{**	**type-qualifier [*] id**	**[:bits];**		**} [id]**
	One or more, semi-colon separated			Zero or more

For example:

```
struct data_record {
    int   a[2];
```

```
   int  b : 2; /*2 bits
*/
   int    c : 3; /*3
bits*/
   int d;
} data_var;                    //data_record is a structure type
                               //data_var is a variable
```

Union type: holds objects of different types and sizes, with the compiler keeping track of size and alignment requirements. They provide a way to manipulate different kinds of data in a single area of storage.

union**[*] [id] {**	**type-qualifier [*] id**	**[:bits];**	**} [id]**
	One or more, semi-colon separated		Zero or more

For example:

```
union u_tab {
   int ival;
   long lval;
   float fval;
   };                          //u_tag is a union type that can hold a float
```

SEE ALSO: Declarations, Type Specifiers, Type Qualifiers, Enumerated Types, typedef, Named Registers

typedef

If **typedef** is used with any of the basic or special types it creates a new type name that can be used in declarations. The identifier does not allocate space but rather may be used as a type specifier in other data definitions.

typedef [type-qualifier] [type-specifier] [declarator];

For example:

```
typedef int mybyte;                 // mybyte can be used in
                                    declaration to
                                    // specify the int type
typedef short mybit;                // mybyte can be used in
                                    declaration to
                                    // specify the int type
typedef enum {red,                  //colors can be used to declare
green=2,blue}colors;
                                    //variable of this enum type
```

SEE ALSO: Declarations, Type Specifiers, Type Qualifiers, Structures & Unions, Enumerated Types, Named Registers

Non-RAM Data Definitions

CCS C compiler also provides a custom qualifier *addressmod* which can be used to define a memory region that can be RAM, program eeprom, data eeprom or external memory. *Addressmod* replaces the older *typemod* (with a different syntax).

The usage is :

```
addressmod
(name,read_function,write_function,start_address,end_address,
share);
```

Where the read_function and write_function should be blank for RAM, or for other memory should be the following prototype:

```
// read procedure for reading n bytes from the memory starting at
location addr
void read_function(int32 addr,int8 *ram, int nbytes){
}

//write procedure for writing n bytes to the memory starting at
location addr
void write_function(int32 addr,int8 *ram, int nbytes){

}
```

For RAM the share argument may be true if unused RAM in this area can be used by the compiler for standard variables.

Example:

```
void DataEE_Read(int32 addr, int8 * ram, int bytes) {
   int i;
   for(i=0;i<bytes;i++,ram++,addr++)
     *ram=read_eeprom(addr);
}

void DataEE_Write(int32 addr, int8 * ram, int bytes) {
   int i;
   for(i=0;i<bytes;i++,ram++,addr++)
     write_eeprom(addr,*ram);
}

addressmod (DataEE,DataEE_read,DataEE_write,5,0xff);
      // would define a region called DataEE between
      // 0x5 and 0xff in the chip data EEprom.

void main (void)
{
  int DataEE test;
  int x,y;
  x=12;
  test=x;  // writes x to the Data EEPROM
  y=test;  // Reads the Data EEPROM
}
```

Note: If the area is defined in RAM then read and write functions are not required, the variables assigned in the memory region defined by the addressmod can be treated as a regular variable in all valid expressions. Any structure or data type can be used with an addressmod. Pointers can also be made to an addressmod data type. The #type directive can be used to make this memory region as default for variable allocations.

The syntax is :

```
#type default=addressmodname        // all the variable declarations
that
                                    // follow will use this memory
region
#type default=                      // goes back to the default mode
```

For example:

```
Type default=emi                    //emi is the addressmod name
defined
char buffer[8192];
#include <memoryhog.h>
#type default=
```

Using Program Memory for Data

CCS C Compiler provides a few different ways to use program memory for data. The different ways are discussed below:

Constant Data:
The **const** qualifier will place the variables into program memory. If the keyword **const** is used before the identifier, the identifier is treated as a constant. Constants should be initialized and may not be changed at run-time. This is an easy way to create lookup tables.

The **rom** Qualifier puts data in program memory with 3 bytes per instruction space. The address used for ROM data is not a physical address but rather a true byte address. The & operator can be used on ROM variables however the address is logical not physical.

The syntax is:

```
const type id[cexpr] = {value}
```

For example:
Placing data into ROM

```
const int table[16]={0,1,2...15}
```

Placing a string into ROM

```
const char cstring[6]={"hello"}
```

Creating pointers to constants

```
const char *cptr;
cptr = string;
```

The #org preprocessor can be used to place the constant to specified address blocks.

For example:
The constant ID will be at 1C00.

```
#ORG 0x1C00, 0x1C0F
CONST CHAR ID[10]= {"123456789"};
```

Note: Some extra code will precede the 123456789.

The function **label_address** can be used to get the address of the constant. The constant variable can be accessed in the code. This is a great way of storing constant data in large programs. Variable length constant strings can be stored into program memory.

A special method allows the use of pointers to ROM. This method does not contain extra code at the start of the structure as does constant.

For example:

```
char rom commands[] = {"put|get|status|shutdown"};
```

The compiler allows a non-standard C feature to implement a constant array of variable length strings.

The syntax is:

```
const char id[n] [*] = { "string", "string" ...};
```

Where n is optional and id is the table identifier.

For example:

```
const char colors[] [*] = {"Red", "Green", "Blue"};
```

#ROM directive:

Another method is to use #rom to assign data to program memory.

The syntax is:

```
#rom address = {data, data, … , data}
```

For example:

Places 1,2,3,4 to ROM addresses starting at 0x1000

```
#rom 0x1000 = {1, 2, 3, 4}
```

Places null terminated string in ROM

```
#rom 0x1000={"hello"}
```

This method can only be used to initialize the program memory.

Built-in-Functions:

The compiler also provides built-in functions to place data in program memory, they are:

- `write_program_eeprom(address,data);`

- Writes **data** to program memory

- `write_program_memory(address, dataptr, count);`

- Writes **count** bytes of data from **dataptr** to **address** in program memory.

-

Please refer to the help of these functions to get more details on their usage and limitations regarding erase procedures. These functions can be used only on chips that allow writes to program memory. The compiler uses the flash memory erase and write routines to implement the functionality.

The data placed in program memory using the methods listed above can be read from width the following functions:

- `read_program_memory((address, dataptr, count)`

- Reads count bytes from program memory at address to RAM at dataptr.

These functions can be used only on chips that allow reads from program memory. The compiler uses the flash memory read routines to implement the functionality.

Named Registers

The CCS C Compiler supports the new syntax for filing a variable at the location of a processor register. This syntax is being proposed as a C extension for embedded use. The same functionality is provided with the non-standard **#byte**, **#word**, **#bit** and **#locate**.

The syntax is:

register _name type id;

Or

register constant type id;

name is a valid SFR name with an underscore before it.

Examples:

register _status int8 status_reg;
register _T1IF int8 timer_interrupt;
register 0x04 int16 file_select_register;

FUNCTION DEFINITION

Function Definition

The format of a function definition is as follows:

[qualifier] id	([type-specifier id])	{ [stmt] }
Optional See Below	Zero or more comma separated. See Data Types	Zero or more Semi-colon separated. See Statements.

The qualifiers for a function are as follows:

- VOID
- type-specifier
- #separate
- #inline
- #int_..

When one of the above are used and the function has a prototype (forward declaration of the function before it is defined) you must include the qualifier on both the prototype and function definition.

A (non-standard) feature has been added to the compiler to help get around the problems created by the fact that pointers cannot be created to constant strings. A function that has one CHAR parameter will accept a constant string where it is called. The compiler will generate a loop that will call the function once for each character in the string.

Example:

```
void lcd_putc(char c ) {
...
}

lcd_putc ("Hi There.");
```

SEE ALSO:

Overloaded Functions
Reference Parameters
Default Parameters
Variable Parameters

Overloaded Functions

Overloaded functions allow the user to have multiple functions with the same name, but they must accept different parameters.

Here is an example of function overloading: Two functions have the same name but differ in the types of parameters. The compiler determines which data type is being passed as a parameter and calls the proper function.

This function finds the square root of a long integer variable.

```
long FindSquareRoot(long n){
}
```

This function finds the square root of a float variable.

```
float FindSquareRoot(float n){
}
```

FindSquareRoot is now called. If variable is of long type, it will call the first FindSquareRoot() example. If variable is of float type, it will call the second FindSquareRoot() example.

```
result=FindSquareRoot(variable);
```

Reference Parameters

The compiler has limited support for reference parameters. This increases the readability of code and the efficiency of some inline procedures. The following two procedures are the same. The one with reference parameters will be implemented with greater efficiency when it is inline.

```
funct_a(int*x,int*y){
   /*Traditional*/
   if(*x!=5)
      *y=*x+3;
}

funct_a(&a,&b);



funct_b(int&x,int&y){
   /*Reference params*/
   if(x!=5)
      y=x+3;
}

funct_b(a,b);
```

Default Parameters

Default parameters allows a function to have default values if nothing is passed to it when called.

```
int mygetc(char *c, int n=100){
}
```

This function waits n milliseconds for a character over RS232. If a character is received, it saves it to the pointer c and returns TRUE. If there was a timeout it returns FALSE.

```
//gets a char, waits 100ms for timeout
mygetc(&c);
//gets a char, waits 200ms for a timeout
mygetc(&c, 200);
```

Variable Argument Lists

The compiler supports a variable number of parameters. This works like the ANSI requirements except that it does not require at least one fixed parameter as ANSI does. The function can be passed any number of variables and any data types. The access functions are VA_START, VA_ARG, and VA_END. To view the number of arguments passed, the NARGS function can be used.

```
/*
stdarg.h holds the macros and va_list data type needed for variable number of parameters.
*/
#include <stdarg.h>
```

A function with variable number of parameters requires two things. First, it requires the ellipsis (...), which must be the last parameter of the function. The ellipsis represents the variable argument list. Second, it requires one more variable before the ellipsis (...). Usually you will use this variable as a method for determining how many variables have been pushed onto the ellipsis.

Here is a function that calculates and returns the sum of all variables:

```
int Sum(int count, ...)
{
   //a pointer to the argument list
   va_list al;
   int x, sum=0;
   //start the argument list
   //count is the first variable before the ellipsis
   va_start(al, count);
   while(count--) {
      //get an int from the list
      x = var_arg(al, int);
      sum += x;
   }
   //stop using the list
   va_end(al);
   return(sum);
}
```

Some examples of using this new function:

```
x=Sum(5, 10, 20, 30, 40, 50);
y=Sum(3, a, b, c);
```

FUNCTIONAL OVERVIEW

I2C

I2C™ is a popular two-wire communication protocol developed by Phillips. Many PIC microcontrollers support hardware-based I2C™. CCS offers support for the hardware-based I2C™ and a software-based master I2C™ device. (For more information on the hardware-based I2C module, please consult the datasheet for you target device; not all PICs support I2C™.)

Relevant Functions:	
i2c_start()	Issues a start command when in the I2C master mode.
i2c_write(data)	Sends a single byte over the I2C interface.
i2c_read()	Reads a byte over the I2C interface.
i2c_stop()	Issues a stop command when in the I2C master mode.
i2c_poll()	Returns a TRUE if the hardware has received a byte in the buffer.
Relevant Preprocessor:	
#USE I2C	Configures the compiler to support I2C™ to your specifications.
Relevant Interrupts:	
#INT_SSP	I2C or SPI activity
#INT_BUSCOL	Bus Collision
#INT_I2C	I2C Interrupt (Only on 14000)
#INT_BUSCOL2	Bus Collision (Only supported on some PIC18's)
#INT_SSP2	I2C or SPI activity (Only supported on some PIC18's)
Relevant Include Files:	
None, all functions built-in	
Relevant getenv() Parameters:	
I2C_SLAVE	Returns a 1 if the device has I2C slave H/W
I2C_MASTER	Returns a 1 if the device has a I2C master H/W
Example Code:	
#define Device_SDA PIN_C3	// Pin defines
#define Device_SLC PIN_C4	
#use i2c(master, sda=Device_SDA, scl=Device_SCL)	// Configure Device as Master
..	
..	
BYTE data;	// Data to be transmitted
i2c_start();	// Issues a start command when in the I2C master mode.
i2c_write(data);	// Sends a single byte over the I2C interface.
i2c_stop();	// Issues a stop command when in the I2C master mode.

ADC

These options let the user configure and use the analog to digital converter module. They are only available on devices with the ADC hardware. The options for the functions and directives vary depending on the chip and are listed in the device header file. On some devices there are two independent ADC modules, for these chips the second module is configured using secondary ADC setup functions (Ex. setup_ADC2).

Relevant Functions:	
setup_adc(mode)	Sets up the a/d mode like off, the adc clock etc.
setup_adc_ports(value)	Sets the available adc pins to be analog or digital.
set_adc_channel(channel)	Specifies the channel to be use for the a/d call.
read_adc(mode)	Starts the conversion and reads the value. The mode can also control the functionality.
adc_done()	Returns 1 if the ADC module has finished its conversion.
Relevant Preprocessor:	
#DEVICE ADC=xx	Configures the read_adc return size. For example, using a PIC with a 10 bit A/D you can use 8 or 10 for xx- 8 will return the most significant byte, 10 will return the full A/D reading of 10 bits.
Relevant Interrupts:	
INT_AD	Interrupt fires when a/d conversion is complete
INT_ADOF	Interrupt fires when a/d conversion has timed out
Relevant Include Files:	
None, all functions built-in	
Relevant getenv() parameters:	
ADC_CHANNELS	Number of A/D channels
ADC_RESOLUTION	Number of bits returned by read_adc
Example Code:	
#DEVICE ADC=10	
...	
long value;	
...	
setup_adc(ADC_CLOCK_INTERNAL);	//enables the a/d module //and sets the clock to internal adc clock
setup_adc_ports(ALL_ANALOG);	//sets all the adc pins to analog
set_adc_channel(0);	//the next read_adc call will read channel 0
delay_us(10);	//a small delay is required after setting the channel
	//and before read
value=read_adc();	//starts the conversion and reads the result
	//and store it in value
read_adc(ADC_START_ONLY);	//only starts the conversion
value=read_adc(ADC_READ_ONLY);	//reads the result of the last conversion and store it in //value. Assuming the device hat a 10bit ADC module, //value will range between 0-3FF. If #DEVICE ADC=8 had //been used instead the result will yield 0-FF. If #DEVICE //ADC=16 had been used instead the result will yield 0- //FFC0

Analog Comparator

These functions set up the analog comparator module. Only available in some devices.

Relevant Functions:	
setup_comparator(mode)	Enables and sets the analog comparator module. The options vary depending on the chip. Refer to the header file for details.
Relevant Preprocessor:	
None	
Relevant Interrupts:	
INT_COMP	Interrupt fires on comparator detect. Some chips have more than one comparator unit, and thus, more interrupts.
Relevant Include Files:	
None, all functions built-in	
Relevant getenv() Parameters:	
Returns 1 if the device has a comparator	COMP
Example Code:	
setup_comparator(A4_A5_NC_NC);	
if(C1OUT)	
output_low(PIN_D0);	
else	
output_high(PIN_D1);	

CAN Bus

These functions allow easy access to the Controller Area Network (CAN) features included with the MCP2515 CAN interface chip and the PIC18 MCU. These functions will only work with the MCP2515 CAN interface chip and PIC microcontroller units containing either a CAN or an ECAN module. Some functions are only available for the ECAN module and are specified by the work ECAN at the end of the description. The listed interrupts are no available to the MCP2515 interface chip.

Relevant Functions:	
can_init(void);	Initializes the CAN module and clears all the filters and masks so that all messages can be received from any ID.
can_set_baud(void);	Initializes the baud rate of the CAN bus to125kHz, if using a 20 MHz clock and the default CAN-BRG defines, it is called inside the can_init() function so there is no need to call it.
can_set_mode (CAN_OP_MODE mode);	Allows the mode of the CAN module to be changed to configuration mode, listen mode, loop back mode, disabled mode, or normal mode.
can_set_functional_mode (CAN_FUN_OP_MODE mode);	Allows the functional mode of ECAN modules to be changed to legacy mode, enhanced legacy mode, or first in firstout (fifo) mode. ECAN
can_set_id(int* addr, int32 id, int1 ext);	Can be used to set the filter and mask ID's to the value specified by addr. It is also used to set the ID of the message to be sent.
can_get_id(int * addr, int1 ext);	Returns the ID of a received message.

can_putd (int32 id, int * data, int len, int priority, int1 ext, int1 rtr);	Constructs a CAN packet using the given arguments and places it in one of the available transmit buffers.
can_getd (int32 & id, int * data, int & len, struct rx_stat & stat);	Retrieves a received message from one of the CAN buffers and stores the relevant data in the referenced function parameters.
can_enable_rtr(PROG_BUFFER b);	Enables the automatic response feature which automatically sends a user created packet when a specified ID is received. ECAN
can_disable_rtr(PROG_BUFFER b);	Disables the automatic response feature. ECAN
can_load_rtr (PROG_BUFFER b, int * data, int len);	Creates and loads the packet that will automatically transmitted when the triggering ID is received. ECAN
can_enable_filter(long filter);	Enables one of the extra filters included in the ECAN module. ECAN
can_disable_filter(long filter);	Disables one of the extra filters included in the ECAN module. ECAN
can_associate_filter_to_buffer (CAN_FILTER_ASSOCIATION_BUFFERS buffer,CAN_FILTER_ASSOCIATION filter);	Used to associate a filter to a specific buffer. This allows only specific buffers to be filtered and is available in the ECAN module. ECAN
can_associate_filter_to_mask (CAN_MASK_FILTER_ASSOCIATE mask, CAN_FILTER_ASSOCIATION filter);	Used to associate a mask to a specific buffer. This allows only specific buffer to have this mask applied. This feature is available in the ECAN module. ECAN
can_fifo_getd(int32 & id,int * data, int &len,struct rx_stat & stat);	Retrieves the next buffer in the fifo buffer. Only available in the ECON module while operating in fifo mode. ECAN
Relevant Preprocessor:	
None	
Relevant Interrupts:	
#int_canirx	This interrupt is triggered when an invalid packet is received on the CAN.
#int_canwake	This interrupt is triggered when the PIC is woken up by activity on the CAN.
#int_canerr	This interrupt is triggered when there is an error in the CAN module.
#int_cantx0	This interrupt is triggered when transmission from buffer 0 has completed.
#int_cantx1	This interrupt is triggered when transmission from buffer 1 has completed.
#int_cantx2	This interrupt is triggered when transmission from buffer 2 has completed.
#int_canrx0	This interrupt is triggered when a message is received in buffer 0.
#int_canrx1	This interrupt is triggered when a message is received in buffer 1.
Relevant Include Files:	
can-mcp2510.c	Drivers for the MCP2510 and MCP2515 interface chips
can-18xxx8.c	Drivers for the built in CAN module
can-18F4580.c	Drivers for the build in ECAN module
Relevant getenv() Parameters:	
none	
Example Code:	
can_init();	// initializes the CAN bus

can_putd(0x300,data,8,3,TRUE,FALSE);	// places a message on the CAN buss with
	// ID = 0x300 and eight bytes of data pointed to by
	// “data”, the TRUE creates an extended ID, the
	// FALSE creates
can_getd(ID,data,len,stat);	// retrieves a message from the CAN bus storing the
	// ID in the ID variable, the data at the array pointed to by
	// “data', the number of data bytes in len, and statistics
	// about the data in the stat structure.

CCP

These options lets to configure and use the CCP module. There might be multiple CCP modules for a device. These functions are only available on devices with CCP hardware. They operate in 3 modes: capture, compare and PWM. The source in capture/compare mode can be timer1 or timer3 and in PWM can be timer2 or timer4. The options available are different for different devices and are listed in the device header file. In capture mode the value of the timer is copied to the CCP_X register when the input pin event occurs. In compare mode it will trigger an action when timer and CCP_x values are equal and in PWM mode it will generate a square wave.

Relevant Functions:	
setup_ccp1(mode)	Sets the mode to capture, compare or PWM. For capture
set_pwm1_duty(value)	The value is written to the pwm1 to set the duty.
Relevant Preprocessor:	
None	
Relevant Interrupts :	
INT_CCP1	Interrupt fires when capture or compare on CCP1
Relevant Include Files:	
None, all functions built-in	
Relevant getenv() parameters:	
CCP1	Returns 1 if the device has CCP1
Example Code:	
#int_ccp1	
void isr()	
{	
rise = CCP_1;	//CCP_1 is the time the pulse went high
fall = CCP_2;	//CCP_2 is the time the pulse went low
pulse_width = fall - rise;	//pulse width
}	
..	
setup_ccp1(CCP_CAPTURE_RE);	// Configure CCP1 to capture rise
setup_ccp2(CCP_CAPTURE_FE);	// Configure CCP2 to capture fall
setup_timer_1(T1_INTERNAL);	// Start timer 1
Some chips also have fuses which allows to multiplex the ccp/pwm on different pins. So check the fuses to see which pin is set by default. Also fuses to enable/disable pwm outputs.	

Code Profile

Profile a program while it is running. Unlike in-circuit debugging, this tool grabs information while the program is running and provides statistics, logging and tracing of it's execution. This is accomplished by using a simple communication method between the processor and the ICD with minimal side-effects to the timing and execution of the program. Another benefit of code profile versus in-circuit debugging is that a program written with profile support enabled will run correctly even if there is no ICD connected.

In order to use Code Profiling, several functions and pre-processor statements need to be included in the project being compiled and profiled. Doing this adds the proper code profile run-time support on the microcontroller.

See the help file in the Code Profile tool for more help and usage examples.

Relevant Functions:	
profileout()	Send a user specified message or variable to be displayed or logged by the code profile tool.
Relevant Pre-Processor:	
#use profile()	Global configuration of the code profile run-time on the microcontroller.
#profile	Dynamically enable/disable specific elements of the profiler.
Relevant Interrupts:	The profiler can be configured to use a microcontroller's internal timer for more accurate timing of events over the clock on the PC. This timer is configured using the #profile pre-processor command.
Relevant Include Files:	None – all the functions are built into the compiler.
Relevant getenv():	None
Example Code:	

```
#include <18F4520.h>
#use delay(crystal=10MHz, clock=40MHz)
#profile functions, parameters
void main(void)
{
  int adc;
  setup_adc(ADC_CLOCK_INTERNAL);
  set_adc_channel(0);

  for(;;)
  {
    adc = read_adc();
    profileout(adc);
    delay_ms(250);
  }
}
```

Configuration Memory

On all PIC18 Family of chips, the configuration memory is readable and writable. This functionality is not available on the PIC16 Family of devices..

Relevant Functions:	
write_configuration_memory (ramaddress, count)	Writes count bytes, no erase needed
or	
write_configuration_memory (offset,ramaddress, count)	Writes count bytes, no erase needed starting at byte address offset
read_configuration_memory (ramaddress,count)	Read count bytes of configuration memory
Relevant Preprocessor:	
None	
Relevant Include Files:	
None, all functions built-in	
Relevant getenv() parameters:	
None	
Example Code:	
For PIC18f452	
int16 data=0xc32;	
...	
write_configuration_memory(data,2);	//writes 2 bytes to the configuration memory

DAC

These options let the user configure and use the digital to analog converter module. They are only available on devices with the DAC hardware. The options for the functions and directives vary depending on the chip and are listed in the device header file.

Relevant Functions:	
setup_dac(divisor)	Sets up the DAC e.g. Reference voltages
dac_write(value)	Writes the 8-bit value to the DAC module
	Sets up the d/a mode e.g. Right enable, clock divisor
	Writes the 16-bit value to the specified channel
Relevant Preprocessor:	
	#USE DELAY(clock=20M, Aux: crystal=6M, clock=3M)
Relevant Interrupts:	
None	
Relevant Include Files:	
None, all functions built-in	
Relevant getenv() parameters:	
None	

```
int8 i=0;
setup_dac (DAC_VSS_VDD);
while (TRUE) {
itt;
dac_write(i);
}
```

Data Eeprom

The data eeprom memory is readable and writable in some chips. These options lets the user read and write to the data eeprom memory. These functions are only available in flash chips.

Relevant Functions:	
(8 bit or 16 bit depending on the device)	
read_eeprom(address)	Reads the data EEPROM memory location
write_eeprom(address, value)	Erases and writes value to data EEPROM location address.
	Reads N bytes of data EEPROM starting at memory location address. The maximum return size is int64.
	Reads from EEPROM to fill variable starting at address
	Reads N bytes, starting at address, to pointer
	Writes value to EEPROM address
	Writes N bytes to address from pointer
Relevant Preprocessor:	
#ROM address={list}	Can also be used to put data EEPROM memory data into the hex file.
write_eeprom = noint	Allows interrupts to occur while the write_eeprom() operations is polling the done bit to check if the write operations has completed. Can be used as long as no EEPROM operations are performed during an ISR.
Relevant Interrupts:	
INT_EEPROM	Interrupt fires when EEPROM write is complete
Relevant Include Files:	
None, all functions built-in	
Relevant getenv() parameters:	
DATA_EEPROM	Size of data EEPROM memory.
Example Code:	

For 18F452
#rom 0xf00000={1,2,3,4,5}
	//inserts this data into the hex file. The data eeprom address
	//differs for different family of chips. Please refer to the
	//programming specs to find the right value for the device

write_eeprom(0x0,0x12);	//writes 0x12 to data eeprom location 0
value=read_eeprom(0x0);	//reads data eeprom location 0x0 returns 0x12
#ROM 0x007FFC00={1,2,3,4,5}	// Inserts this data into the hex file
	// The data EEPROM address differs between PICs // Please refer to the device editor for device specific values.
write_eeprom(0x10, 0x1337);	// Writes 0x1337 to data EEPROM location 10.
value=read_eeprom(0x0);	// Reads data EEPROM location 10 returns 0x1337.

Data Signal Modulator

The Data Signal Modulator (DSM) allows the user to mix a digital data stream (the “modulator signal”) with a carrier signal to produce a modulated output. Both the carrier and the modulator signals are supplied to the DSM module, either internally from the output of a peripheral, or externally through an input pin. The modulated output signal is generated by performing a logical AND operation of both the carrier and modulator signals and then it is provided to the MDOUT pin. Using this method, the DSM can generate the following types of key modulation schemes:

- Frequency Shift Keying (FSK)
- Phase Shift Keying (PSK)
- On-Off Keying (OOK)

Relevant Functions:	
(8 bit or 16 bit depending on the device)	
setup_dsm(mode,source,carrier)	Configures the DSM module and selects the source signal and carrier signals.
setup_dsm(TRUE)	Enables the DSM module.
setup_dsm(FALSE)	Disables the DSM module.
Relevant Preprocessor: **None**	
Relevant Interrupts: **None**	
Relevant Include Files: **None, all functions built-in**	
Relevant getenv() parameters:	None
Example Code:	
setup_dsm(DSM_ENABLED |	//Enables DSM module with the output enabled and selects UART1
DSM_OUTPUT_ENABLED,	//as the source signal and VSS as the high carrier signal and OC1's
DSM_SOURCE_UART1,	//PWM output as the low carrier signal.
DSM_CARRIER_HIGH_VSS |	
DSM_CARRIER_LOW_OC1);	
if(input(PIN_B0)) **setup_dsm(FALSE);**	Disable DSM module
else **setup_dsm(TRUE);**	Enable DSM module

External Memory

Some PIC18 devices have the external memory functionality where the external memory can be mapped to external memory devices like (Flash, EPROM or RAM). These functions are available only on devices that support external memory bus.

General Purpose I/O

These options let the user configure and use the I/O pins on the device. These functions will affect the pins that are listed in the device header file.

Relevant Functions:	
output_high(pin)	Sets the given pin to high state.
output_low(pin)	Sets the given pin to the ground state.
output_float(pin)	Sets the specified pin to the input mode. This will allow the pin to float high to represent a high on an open collector type of connection.
output_x(value)	Outputs an entire byte to the port.
output_bit(pin,value)	Outputs the specified value (0,1) to the specified I/O pin.
input(pin)	The function returns the state of the indicated pin.
input_state(pin)	This function reads the level of a pin without changing the direction of the pin as INPUT() does.
set_tris_x(value)	Sets the value of the I/O port direction register. A '1' is an input and '0' is for output.
input_change_x( )	This function reads the levels of the pins on the port, and compares them to the last time they were read to see if there was a change, 1 if there was, 0 if there wasn't.
Relevant Preprocessor:	
#USE STANDARD_IO(port)	This compiler will use this directive be default and it will automatically inserts code for the direction register whenever an I/O function like output_high() or input() is used.
#USE FAST_IO(*port*)	This directive will configure the I/O port to use the fast method of performing I/O. The user will be responsible for setting the port direction register using the set_tris_x() function.
#USE FIXED_IO (*port_outputs=;in,pin?*)	This directive set particular pins to be used an input or output, and the compiler will perform this setup every time this pin is used.
Relevant Interrupts:	
None	
Relevant Include Files:	
None, all functions built-in	
Relevant getenv() parameters:	
PIN:pb	Returns a 1 if bit b on port p is on this part

Example Code:

```
#use fast_io(b)
...
Int8 Tris_value= 0x0F;
int1 Pin_value;
...
set_tris_b(Tris_value);          //Sets B0:B3 as  input and B4:B7 as output
output_high(PIN_B7);             //Set the pin B7 to High
If(input(PIN_B0)){               //Read the value on pin B0, set B7 to low if pin B0 is high
output_high(PIN_B7);}
```

Internal LCD

Some families of PIC microcontrollers can drive a glass segment LCD directly, without the need of an LCD controller. For example, the PIC16C92X, PIC16F91X, and PIC16F193X series of chips have an internal LCD driver module.

Relevant Functions:	
setup_lcd (mode, prescale, [segments])	Configures the LCD Driver Module to use the specified mode, timer prescaler, and segments. For more information on valid modes and settings, see the setup_lcd( ) manual page and the *.h header file for the PIC micro-controller being used.
lcd_symbol (symbol, segment_b7 ... segment_b0)	The specified symbol is placed on the desired segments, where segment_b7 to segment_b0 represent SEGXX pins on the PIC micro-controller. For example, if bit 0 of symbol is set, then segment_b0 is set, and if segment_b0 is 15, then SEG15 would be set.
lcd_load(ptr, offset, length)	Writes **length** bytes of data from **pointer** directly to the LCD segment memory, starting with **offset**.
lcd_contrast (contrast)	Passing a value of 0 – 7 will change the contrast of the LCD segments, 0 being the minimum, 7 being the maximum.
Relevant Preprocessor:	
None	
Relevant Interrupts:	
#int_lcd	LCD frame is complete, all pixels displayed
Relevant Inlcude Files:	None, all functions built-in to the compiler.
Relevant getenv() Parameters:	
LCD	Returns TRUE if the device has an Internal LCD Driver Module.

Example Program:

```
// How each segment of the LCD is set (on or off) for the ASCII digits 0 to 9.
byte CONST DIGIT_MAP[10] = {0xFC, 0x60, 0xDA, 0xF2, 0x66, 0xB6, 0xBE, 0xE0, 0xFE, 0xE6};

// Define the segment information for the first digit of the LCD
#define DIGIT1   COM1+20, COM1+18, COM2+18, COM3+20, COM2+28, COM1+28, COM2+20, COM3+18

// Displays the digits 0 to 9 on the first digit of the LCD.
for(i = 0; i <= 9; i++) {
        lcd_symbol( DIGIT_MAP[i], DIGIT1 );
        delay_ms( 1000 );
}
```

Internal Oscillator

Many chips have internal oscillator. There are different ways to configure the internal oscillator. Some chips have a constant 4 Mhz factory calibrated internal oscillator. The value is stored in some location (mostly the highest program memory) and the compiler moves it to the osccal register on startup. The programmers save and restore this value but if this is lost they need to be programmed before the oscillator is functioning properly. Some chips have factory calibrated internal oscillator that offers software selectable frequency range(from 31Kz to 8 Mhz) and they have a default value and can be switched to a higher/lower value in software. They are also software tunable. Some chips also provide the PLL option for the internal oscillator.

Relevant Functions:	
setup_oscillator(mode, finetune)	Sets the value of the internal oscillator and also tunes it. The options vary

	depending on the chip and are listed in the device header files.
Relevant Preprocessor:	
None	
Relevant Interrupts:	
INT_OSC_FAIL or INT_OSCF	Interrupt fires when the system oscillator fails and the processor switches to the internal oscillator.
Relevant Include Files:	
None, all functions built-in	
Relevant getenv() parameters:	
None	
Example Code:	
For PIC18F8722	
setup_oscillator(OSC_32MHZ);	//sets the internal oscillator to 32MHz (PLL enabled)
If the internal oscillator fuse option are specified in the #fuses and a valid clock is specified in the #use delay(clock=xxx) directive the compiler automatically sets up the oscillator. The #use delay statements should be used to tell the compiler about the oscillator speed.	

Interrupts

The following functions allow for the control of the interrupt subsystem of the microcontroller. With these functions, interrupts can be enabled, disabled, and cleared. With the preprocessor directives, a default function can be called for any interrupt that does not have an associated ISR, and a global function can replace the compiler generated interrupt dispatcher.

Relevant Functions:	
disable_interrupts()	Disables the specified interrupt.
enable_interrupts()	Enables the specified interrupt.
ext_int_edge()	Enables the edge on which the edge interrupt should trigger. This can be either rising or falling edge.
clear_interrupt()	This function will clear the specified interrupt flag. This can be used if a global isr is used, or to prevent an interrupt from being serviced.
interrupt_active()	This function checks the interrupt flag of specified interrupt and returns true if flag is set.
interrupt_enabled()	This function checks the interrupt enable flag of the specified interrupt and returns TRUE if set.
Relevant Preprocessor:	
#DEVICE HIGH_INTS=	This directive tells the compiler to generate code for high priority interrupts.
#INT_XXX fast	This directive tells the compiler that the specified interrupt should be treated as a high priority interrupt.
Relevant Interrupts:	
#int_default	This directive specifies that the following function should be called if an interrupt is triggered but no routine is associated with that interrupt.
#int_global	This directive specifies that the following function should be called whenever an interrupt is triggered. This function will replace the compiler generated interrupt dispatcher.
#int_xxx	This directive specifies that the following function should be called whenever the xxx interrupt is triggered. If the compiler generated interrupt dispatcher is

	used, the compiler will take care of clearing the interrupt flag bits.
Relevant Include Files: **none, all functions built in.**	
Relevant getenv() Parameters: **none**	
Example Code:	
#int_timer0	
void timer0interrupt()	// #int_timer associates the following function with the
	// interrupt service routine that should be called
enable_interrupts(TIMER0);	// enables the timer0 interrupt
disable_interrtups(TIMER0);	// disables the timer0 interrupt
clear_interrupt(TIMER0);	// clears the timer0 interrupt flag

Low Voltage Detect

These functions configure the high/low voltage detect module. Functions available on the chips that have the low voltage detect hardware.

Relevant Functions:	
setup_low_volt_detect(mode)	Sets the voltage trigger levels and also the mode (below or above in case of the high/low voltage detect module). The options vary depending on the chip and are listed in the device header files.
Relevant Preprocessor:	
None	
Relevant Interrupts :	
INT_LOWVOLT	Interrupt fires on low voltage detect
Relevant Include Files:	
None, all functions built-in	
Relevant getenv() parameters:	
None	
Example Code:	
For PIC18F8722	
setup_low_volt_detect (LVD_36|LVD_TRIGGER_ABOVE);	//sets the trigger level as 3.6 volts and
	// trigger direction as above. The interrupt
	//if enabled is fired when the voltage is
	//above 3.6 volts.

PMP/EPMP

The Parallel Master Port (PMP)/Enhanced Parallel Master Port (EPMP) is a parallel 8-bit/16-bit I/O module specifically designed to communicate with a wide variety of parallel devices. Key features of the PMP module are:

- 8 or 16 Data lines
- Up to 16 or 32 Programmable Address Lines
- Up to 2 Chip Select Lines

- Programmable Strobe option
- Address Auto-Increment/Auto-Decrement
- Programmable Address/Data Multiplexing
- Programmable Polarity on Control Signals
- Legacy Parallel Slave(PSP) Support
- Enhanced Parallel Slave Port Support
- Programmable Wait States

Relevant Functions:	
	This will setup the PMP/EPMP module for various mode and specifies which address lines to be used.
setup_psp (options,address_mask)	This will setup the PSP module for various mode and specifies which address lines to be used.
setup_pmp_csx(options,[offset])	Sets up the Chip Select X Configuration, Mode and Base Address registers
setup_psp_es(options)	Sets up the Chip Select X Configuration and Mode registers
	Write the data byte to the next buffer location.
	This will write a byte of data to the next buffer location or will write a byte to the specified buffer location.
	Reads a byte of data.
	psp_read() will read a byte of data from the next buffer location and psp_read (address) will read the buffer location address.
	Configures the address register of the PMP module with the destination address during Master mode operation.
	This will return the status of the output buffer underflow bit.
	This will return the status of the input buffers.
psp_input_full()	This will return the status of the input buffers.
	This will return the status of the output buffers.
psp_output_full()	This will return the status of the output buffers.
Relevant Preprocessor:	
None	
Relevant Interrupts :	
#INT_PMP	Interrupt on read or write strobe
Relevant Include Files:	
None, all functions built-in	
Relevant getenv() parameters:	
None	
Example Code:	
setup_pmp(PAR_ENABLE |	Sets up Master mode with address lines PMA0:PMA7
PAR_MASTER_MODE_1 |	
PAR_STOP_IN_IDLE,0x00FF);	
If (pmp_output_full ( ))	
{	
pmp_write(next_byte);	
}	

Power PWM

These options lets the user configure the Pulse Width Modulation (PWM) pins. They are only available on devices equipped with PWM. The options for these functions vary depending on the chip and are listed in the device header file.

Relevant Functions:	
setup_power_pwm(config)	Sets up the PWM clock, period, dead time etc.
setup_power_pwm_pins(module x)	Configure the pins of the PWM to be in Complimentary, ON or OFF mode.
set_power_pwmx_duty(duty)	Stores the value of the duty cycle in the PDCXL/H register. This duty cycle value is the time for which the PWM is in active state.
set_power_pwm_override(pwm,override,value)	This function determines whether the OVDCONS or the PDC registers determine the PWM output .
Relevant Preprocessor:	
None	
Relevant Interrupts:	
#INT_PWMTB	PWM Timebase Interrupt (Only available on PIC18XX31)
Relevant getenv() Parameters:	
None	
Example Code:	

```
....
long duty_cycle, period;
...
        // Configures PWM  pins to be ON,OFF or in Complimentary mode.
setup_power_pwm_pins(PWM_COMPLEMENTARY ,PWM_OFF, PWM_OFF, PWM_OFF);

        //Sets up PWM clock , postscale and period. Here period is used to set the
        //PWM Frequency as follows:
        //Frequency = Fosc / (4 * (period+1) *postscale)
setup_power_pwm(PWM_CLOCK_DIV_4|PWM_FREE_RUN,1,0,period,0,1,0);

set_power_pwm0_duty(duty_cycle));        // Sets the duty cycle of the PWM 0,1 in
                                         //Complementary mode
```

Program Eeprom

The Flash program memory is readable and writable in some chips and is just readable in some. These options lets the user read and write to the Flash program memory. These functions are only available in flash chips.

Relevant Functions:	
read_program_eeprom(address)	Reads the program memory location (16 bit or 32 bit depending on the device).
write_program_eeprom(address, value)	Writes value to program memory location address.
erase_program_eeprom(address)	Erases FLASH_ERASE_SIZE bytes in program memory.
write_program_memory(address,dataptr,count)	Writes count bytes to program memory from dataptr to address. When address is a mutiple of FLASH_ERASE_SIZE an erase is also performed.
read_program_memory(address,dataptr,count)	Read count bytes from program memory at address to dataptr.
Relevant Preprocessor:	
#ROM address={list}	Can be used to put program memory data into the hex file.

#DEVICE(WRITE_EEPROM=ASYNC)	Can be used with #DEVICE to prevent the write function from hanging. When this is used make sure the eeprom is not written both inside and outside the ISR.
Relevant Interrupts:	
INT_EEPROM	Interrupt fires when eeprom write is complete.
Relevant Include Files:	
None, all functions built-in	
Relevant getenv() parameters	
PROGRAM_MEMORY	Size of program memory
READ_PROGRAM	Returns 1 if program memory can be read
FLASH_WRITE_SIZE	Smallest number of bytes written in flash
FLASH_ERASE_SIZE	Smallest number of bytes erased in flash
Example Code:	
For 18F452 where the write size is 8 bytes and erase size is 64 bytes	
#rom 0xa00={1,2,3,4,5}	//inserts this data into the hex file.
erase_program_eeprom(0x1000);	//erases 64 bytes strting at 0x1000
write_program_eeprom(0x1000,0x1234);	//writes 0x1234 to 0x1000
value=read_program_eeprom(0x1000);	//reads 0x1000 returns 0x1234
write_program_memory(0x1000,data,8);	//erases 64 bytes starting at 0x1000 as 0x1000 is a multiple
	//of 64 and writes 8 bytes from data to 0x1000
read_program_memory(0x1000,value,8);	//reads 8 bytes to value from 0x1000
erase_program_eeprom(0x1000);	//erases 64 bytes starting at 0x1000
write_program_memory(0x1010,data,8);	//writes 8 bytes from data to 0x1000
read_program_memory(0x1000,value,8);	//reads 8 bytes to value from 0x1000
For chips where getenv("FLASH_ERASE_SIZE") > getenv("FLASH_WRITE_SIZE")	
WRITE_PROGRAM_EEPROM -	Writes 2 bytes,does not erase (use ERASE_PROGRAM_EEPROM)
WRITE_PROGRAM_MEMORY -	Writes any number of bytes,will erase a block whenever the first (lowest) byte in a block is written to. If the first address is not the start of a block that block is not erased.
ERASE_PROGRAM_EEPROM -	Will erase a block. The lowest address bits are not used.
For chips where getenv("FLASH_ERASE_SIZE") = getenv("FLASH_WRITE_SIZE")	
WRITE_PROGRAM_EEPROM -	Writes 2 bytes, no erase is needed.
WRITE_PROGRAM_MEMORY -	Writes any number of bytes, bytes outside the range of the write block are not changed. No erase is needed.
ERASE_PROGRAM_EEPROM -	Not available.

PSP

These options let to configure and use the Parallel Slave Port on the supported devices.

Relevant Functions:	
setup_psp(mode)	Enables/disables the psp port on the chip
psp_output_full()	Returns 1 if the output buffer is full(waiting to be read by the external bus)

psp_input_full()	Returns 1 if the input buffer is full(waiting to read by the cpu)
psp_overflow()	Returns 1 if a write occurred before the previously written byte was read

Relevant Preprocessor:
None

Relevant Interrupts :

INT_PSP	Interrupt fires when PSP data is in

Relevant Include Files:
None, all functions built-in

Relevant getenv() parameters:

PSP	Returns 1 if the device has PSP

Example Code:

```
  while(psp_output_full());     //waits till the output buffer is cleared
  psp_data=command;             //writes to the port
  while(!input_buffer_full());  //waits till input buffer is cleared
  if (psp_overflow())
    error=true                  //if there is an overflow set the error flag
  else
   data=psp_data;               //if there is no overflow then read the port
```

QEI

The Quadrature Encoder Interface (QEI) module provides the interface to incremental encoders for obtaining mechanical positional data.

Relevant Functions:

setup_qei(options, filter,maxcount)	Configures the QEI module.
qei_status( )	Returns the status of the QUI module.
qei_set_count(value)	Write a 16-bit value to the position counter.
qei_get_count( )	Reads the current 16-bit value of the position counter.

Relevant Preprocessor:

None

Relevant Interrupts :

#INT_QEI	Interrupt on rollover or underflow of the position counter.

Relevant Include Files:
None, all functions built-in

Relevant getenv() parameters:

None

Example Code:

```
int16 Value;

setup_qei(QEI_MODE_X2 |
QEI_TIMER_INTERNAL,
QEI_FILTER_DIV_2,QEI_FORWARD);

Value = qei_get_count( );
```

Setup the QEI module

Read the count.

RS232 I/O

These functions and directives can be used for setting up and using RS232 I/O functionality.

Relevant Functions:

getc() or getch() **getchar() or fgetc()**	Gets a character on the receive pin(from the specified stream in case of fgetc, stdin by default). Use KBHIT to check if the character is available.
gets() or fgets()	Gets a string on the receive pin(from the specified stream in case of fgets, STDIN by default). Use getc to receive each character until return is encountered.
putc() or putchar() or fputc()	Puts a character over the transmit pin(on the specified stream in the case of fputc, stdout by default)
puts() or fputs()	Puts a string over the transmit pin(on the specified stream in the case of fputc, stdout by default). Uses putc to send each character.
printf() or fprintf()	Prints the formatted string(on the specified stream in the case of fprintf, stdout by default). Refer to the printf help for details on format string.
kbhit()	Return true when a character is received in the buffer in case of hardware RS232 or when the first bit is sent on the RCV pin in case of software RS232. Useful for polling without waiting in getc.
setup_uart(baud,[stream]) **or** **setup_uart_speed(baud,[stream])**	Used to change the baud rate of the hardware UART at run-time. Specifying stream is optional. Refer to the help for more advanced options.

assert(condition)	Checks the condition and if false prints the file name and line to STDERR. Will not generate code if #DEFINE NODEBUG is used.
perror(message)	Prints the message and the last system error to STDERR.
putc_send() or fputc_send()	When using transmit buffer, used to transmit data from buffer. See function description for more detail on when needed.
rcv_buffer_bytes()	When using receive buffer, returns the number of bytes in buffer that still need to be retrieved.
tx_buffer_bytes()	When using transmit buffer, returns the number of bytes in buffer that still need to be sent.
tx_buffer_full()	When using transmit buffer, returns TRUE if transmit buffer is full.
receive_buffer_full()	When using receive buffer, returns TRUE if receive buffer is full.
Relevant Interrupts:	
INT_RDA	Interrupt fires when the receive data available
INT_TBE	Interrupt fires when the transmit data empty
Some chips have more than one hardware uart, and hence more interrupts.	
Relevant Include Files:	
None, all functions built-in	
Relevant getenv() parameters:	
UART	Returns the number of UARTs on this PIC
AUART	Returns true if this UART is an advanced UART
UART_RX	Returns the receive pin for the first UART on this PIC (see PIN_XX)
UART_TX	Returns the transmit pin for the first UART on this PIC
UART2_RX	Returns the receive pin for the second UART on this PIC
UART2_TX	TX – Returns the transmit pin for the second UART on this PIC
Example Code:	
/* configure and enable uart, use first hardware UART on PIC */	
#use rs232(uart1, baud=9600)	
/* print a string */	
printf("enter a character");	
/* get a character */	
if (kbhit())	//check if a character has been received

c = getc();	//read character from UART

RTOS

These functions control the operation of the CCS Real Time Operating System (RTOS). This operating system is cooperatively multitasking and allows for tasks to be scheduled to run at specified time intervals. Because the RTOS does not use interrupts, the user must be careful to make use of the rtos_yield() function in every task so that no one task is allowed to run forever.

Relevant Functions:	
rtos_run()	Begins the operation of the RTOS. All task management tasks are implemented by this function.
rtos_terminate()	This function terminates the operation of the RTOS and returns operation to the original program. Works as a return from the rtos_run()function.
rtos_enable(task)	Enables one of the RTOS tasks. Once a task is enabled, the rtos_run() function will call the task when its time occurs. The parameter to this function is the name of task to be enabled.
rtos_disable(task)	Disables one of the RTOS tasks. Once a task is disabled, the rtos_run() function will not call this task until it is enabled using rtos_enable(). The parameter to this function is the name of the task to be disabled.
rtos_msg_poll()	Returns true if there is data in the task's message queue.
rtos_msg_read()	Returns the next byte of data contained in the task's message queue.
rtos_msg_send(task,byte)	Sends a byte of data to the specified task. The data is placed in the receiving task's message queue.
rtos_yield()	Called with in one of the RTOS tasks and returns control of the program to the rtos_run() function. All tasks should call this function when finished.
rtos_signal(sem)	Increments a semaphore which is used to broadcast the availability of a limited resource.
rtos_wait(sem)	Waits for the resource associated with the semaphore to become available and then decrements to semaphore to claim the resource.
rtos_await(expre)	Will wait for the given expression to evaluate to true before allowing the task to continue.
rtos_overrun(task)	Will return true if the given task over ran its alloted time.
rtos_stats(task,stat)	Returns the specified statistic about the specified task. The statistics include the minimum and maximum times for the task to run and the total time the task has spent running.
Relevant Preprocessor:	
#USE RTOS(options)	This directive is used to specify several different RTOS attributes including the timer to use, the minor cycle time and whether or not statistics should be enabled.
#TASK(options)	This directive tells the compiler that the following function is to be an RTOS task.
#TASK	specifies the rate at which the task should be called, the maximum time the task shall be allowed to run, and how large it's queue should be

Relevant Interrupts:

none

Relevant Include Files:

none all functions are built in

Relevant getenv() Parameters:

none

Example Code:

```
#USE RTOS(timer=0,minor_cycle=20ms)   // RTOS will use timer zero, minor cycle will be 20ms
...
int sem;
...
#TASK(rate=1s,max=20ms,queue=5)   // Task will run at a rate of once per second
void task_name();                 // with a  maximum running time of 20ms and
                                  // a 5 byte queue
rtos_run();                       // begins the RTOS
rtos_terminate();                 // ends the RTOS

rtos_enable(task_name);           // enables the previously declared task.
rtos_disable(task_name);          // disables the previously declared task

rtos_msg_send(task_name,5);       // places the value 5 in task_names queue.
rtos_yield();                     // yields control to the RTOS
rtos_sigal(sem);                  // signals that the resource represented by sem is available.
```

For more information on the CCS RTOS please

SPI

SPI™ is a fluid standard for 3 or 4 wire, full duplex communications named by Motorola. Most PIC devices support most common SPI™ modes. CCS provides a support library for taking advantage of both hardware and software based SPI™ functionality. For software support, see #USE SPI.

Relevant Functions:

setup_spi(mode) **setup_spi2(mode)** **setup_spi3 (mode)** **setup_spi4 (mode)**	Configure the hardware SPI to the specified mode. The mode configures setup_spi2(mode) thing such as master or slave mode, clock speed and clock/data trigger configuration.

Note: for devices with dual SPI interfaces a second function, setup_spi2(), is provided to configure the second interface.

spi_data_is_in() **spi_data_is_in2()**	Returns TRUE if the SPI receive buffer has a byte of data.
spi_write(value) **spi_write2(value)**	Transmits the value over the SPI interface. This will cause the data to be clocked out on the SDO pin.
spi_read(value) **spi_read2(value)**	Performs an SPI transaction, where the value is clocked out on the SDO pin and data clocked in on the SDI pin is returned. If you just want to clock in data then you can use spi_read() without a parameter**.**

Relevant Preprocessor:

None

Relevant Interrupts:

#int_ssp **#int_ssp2**	Transaction (read or write) has completed on the indicated peripheral.
Relevant getenv() Parameters:	
SPI	Returns TRUE if the device has an SPI peripheral
Example Code:	
//configure the device to be a master, data transmitted on H-to-L clock transition	
setup_spi(SPI_MASTER | SPI_H_TO_L | SPI_CLK_DIV_16);	
spi_write(0x80);	//write 0x80 to SPI device
value=spi_read();	//read a value from the SPI device
value=spi_read(0x80);	//write 0x80 to SPI device the same time you are reading a value.

Timer0

These options lets the user configure and use timer0. It is available on all devices and is always enabled. The clock/counter is 8-bit on pic16s and 8 or 16 bit on pic18s. It counts up and also provides interrupt on overflow. The options available differ and are listed in the device header file.

Relevant Functions:	
setup_timer_0(mode)	Sets the source, prescale etc for timer0
set_timer0(value) or **set_rtcc(value)**	Initializes the timer0 clock/counter. Value may be a 8 bit or 16 bit depending on the device.
value=get_timer0	Returns the value of the timer0 clock/counter
Relevant Preprocessor:	None
Relevant Interrupts :	
INT_TIMER0 or INT_RTCC	Interrupt fires when timer0 overflows
Relevant Include Files:	
None, all functions built-in	
Relevant getenv() parameters:	
TIMER0	Returns 1 if the device has timer0
Example Code:	
For PIC18F452	
setup_timer_0(RTCC_INTERNAL **|RTCC_DIV_2|RTCC_8_BIT);**	//sets the internal clock as source //and prescale 2. At 20Mhz timer0
	//will increment every 0.4us in this
	//setup and overflows every
	//102.4us
set_timer0(0);	//this sets timer0 register to 0
time=get_timer0();	//this will read the timer0 register
	//value

Timer1

These options lets the user configure and use timer1. The clock/counter is 16-bit on pic16s and pic18s. It counts up and also provides interrupt on overflow. The options available differ and are listed in the device header file.

Relevant Functions:	
setup_timer_1(mode)	Disables or sets the source and prescale for timer1
set_timer1(value)	Initializes the timer1 clock/counter
value=get_timer1	Returns the value of the timer1 clock/counter
Relevant Preprocessor:	
None	
Relevant Interrupts:	
INT_TIMER1	Interrupt fires when timer1 overflows
Relevant Include Files:	
None, all functions built-in	
Relevant getenv() parameters:	
TIMER1	Returns 1 if the device has timer1
Example Code:	
For PIC18F452	
setup_timer_1(T1_DISABLED);	//disables timer1
or	
setup_timer_1(T1_INTERNAL|T1_DIV_BY_8);	//sets the internal clock as source
	//and prescale as 8. At 20Mhz timer1 will increment
	//every 1.6us in this setup and overflows every
	//104.896ms
set_timer1(0);	//this sets timer1 register to 0
time=get_timer1();	//this will read the timer1 register value

Timer2

These options lets the user configure and use timer2. The clock/counter is 8-bit on pic16s and pic18s. It counts up and also provides interrupt on overflow. The options available differ and are listed in the device header file.

Relevant Functions:	
setup_timer_2 (mode,period,postscale)	Disables or sets the prescale, period and a postscale for timer2
set_timer2(value)	Initializes the timer2 clock/counter
value=get_timer2	Returns the value of the timer2 clock/counter
Relevant Preprocessor:	
None	
Relevant Interrupts:	
INT_TIMER2	Interrupt fires when timer2 overflows
Relevant Include Files:	
None, all functions built-in	
Relevant getenv() parameters:	
TIMER2	Returns 1 if the device has timer2

Example Code:	
For PIC18F452	
setup_timer_2(T2_DISABLED);	//disables timer2
or	
setup_timer_2(T2_DIV_BY_4,0xc0,2);	//sets the prescale as 4, period as 0xc0 and //postscales as 2.
	//At 20Mhz timer2 will increment every .8us in this
	//setup overflows every 154.4us and interrupt every 308.2us
set_timer2(0);	//this sets timer2 register to 0
time=get_timer2();	//this will read the timer1 register value

Timer3

Timer3 is very similar to timer1. So please refer to the Timer1 section for more details.

Timer4

Timer4 is very similar to Timer2. So please refer to the Timer2 section for more details.

Timer5

These options lets the user configure and use timer5. The clock/counter is 16-bit and is available only on 18Fxx31 devices. It counts up and also provides interrupt on overflow. The options available differ and are listed in the device header file.

Relevant Functions:	
setup_timer_5(mode)	Disables or sets the source and prescale for imer5
set_timer5(value)	Initializes the timer5 clock/counter
value=get_timer5	Returns the value of the timer51 clock/counter
Relevant Preprocessor:	
None	
Relevant Interrupts :	
INT_TIMER5	Interrupt fires when timer5 overflows
Relevant Include Files:	None, all functions built-in
Relevant getenv() parameters:	
TIMER5	Returns 1 if the device has timer5
Example Code:	
For PIC18F4431	
setup_timer_5(T5_DISABLED)	//disables timer5
or	
setup_timer_5(T5_INTERNAL|T5_DIV_BY_1);	//sets the internal clock as source and //prescale as 1.
	//At 20Mhz timer5 will increment every .2us in this
	//setup and overflows every 13.1072ms
set_timer5(0);	//this sets timer5 register to 0

time=get_timer5();	//this will read the timer5 register value

TimerA

These options lets the user configure and use timerA. It is available on devices with Timer A hardware. The clock/counter is 8 bit. It counts up and also provides interrupt on overflow. The options available are listed in the device's header file.

Relevant Functions:	
setup_timer_A(mode)	Disable or sets the source and prescale for timerA
set_timerA(value)	Initializes the timerA clock/counter
value=get_timerA()	Returns the value of the timerA clock/counter
Relevant Preprocessor:	
None	
Relevant Interrupts :	
INT_TIMERA	Interrupt fires when timerA overflows
Relevant Include Files:	None, all functions built-in
Relevant getenv() parameters:	
TIMERA	Returns 1 if the device has timerA
Example Code:	
setup_timer_A(TA_OFF);	//disable timerA
or	
setup_timer_A	//sets the internal clock as source
(TA_INTERNAL | TA_DIV_8);	//and prescale as 8. At 20MHz timerA will increment
	//every 1.6us in this setup and overflows every
	//409.6us
set_timerA(0);	//this sets timerA register to 0
time=get_timerA();	//this will read the timerA register value

TimerB

These options lets the user configure and use timerB. It is available on devices with TimerB hardware. The clock/counter is 8 bit. It counts up and also provides interrupt on overflow. The options available are listed in the device's header file.

Relevant Functions:	
setup_timer_B(mode)	Disable or sets the source and prescale for timerB
set_timerB(value)	Initializes the timerB clock/counter
value=get_timerB()	Returns the value of the timerB clock/counter
Relevant Preprocessor:	
None	
Relevant Interrupts :	
INT_TIMERB	Interrupt fires when timerB overflows
Relevant Include Files:	None, all functions built-in
Relevant getenv() parameters:	

TIMERB	Returns 1 if the device has timerB
Example Code:	
setup_timer_B(TB_OFF);	//disable timerB
or	
setup_timer_B	//sets the internal clock as source
(TB_INTERNAL | TB_DIV_8);	//and prescale as 8. At 20MHz timerB will increment
	//every 1.6us in this setup and overflows every
	//409.6us
set_timerB(0);	//this sets timerB register to 0
time=get_timerB();	//this will read the timerB register value

USB

Universal Serial Bus, or USB, is used as a method for peripheral devices to connect to and talk to a personal computer. CCS provides libraries for interfacing a PIC to PC using USB by using a PIC with an internal USB peripheral (like the PIC16C765 or the PIC18F4550 family) or by using any PIC with an external USB peripheral (the National USBN9603 family).

Relevant Functions:	
usb_init()	Initializes the USB hardware. Will then wait in an infinite loop for the USB peripheral to be connected to bus (but that doesn't mean it has been enumerated by the PC). Will enable and use the USB interrupt.
usb_init_cs()	The same as usb_init(), but does not wait for the device to be connected to the bus. This is useful if your device is not bus powered and can operate without a USB connection.
usb_task()	If you use connection sense, and the usb_init_cs() for initialization, then you must periodically call this function to keep an eye on the connection sense pin. When the PIC is connected to the BUS, this function will then perpare the USB peripheral. When the PIC is disconnected from the BUS, it will reset the USB stack and peripheral. Will enable and use the USB interrupt.
Note: In your application you must define USB_CON_SENSE_PIN to the connection sense pin.	
usb_detach()	Removes the PIC from the bus. Will be called automatically by usb_task() if connection is lost, but can be called manually by the user.
usb_attach()	Attaches the PIC to the bus. Will be called automatically by usb_task() if connection is made, but can be called manually by the user.
usb_attached()	If using connection sense pin (USB_CON_SENSE_PIN), returns TRUE if that pin is high. Else will always return TRUE.
usb_enumerated()	Returns TRUE if the device has been enumerated by the PC. If the device has been enumerated by the PC, that means it is in normal operation mode and you can send/receive packets.
usb_put_packet (endpoint, data, len, tgl)	Places the packet of data into the specified endpoint buffer. Returns TRUE if success, FALSE if the buffer is still full with the last packet.
usb_puts (endpoint, data, len, timeout)	Sends the following data to the specified endpoint. usb_puts() differs from usb_put_packet() in that it will send multi packet messages if the data will not fit into one packet.

usb_kbhit(endpoint)	Returns TRUE if the specified endpoint has data in it's receive buffer
usb_get_packet (endpoint, ptr, max)	Reads up to max bytes from the specified endpoint buffer and saves it to the pointer ptr. Returns the number of bytes saved to ptr.
usb_gets(endpoint, ptr, max, timeout)	Reads a message from the specified endpoint. The difference usb_get_packet() and usb_gets() is that usb_gets() will wait until a full message has received, which a message may contain more than one packet. Returns the number of bytes received.
Relevant CDC Functions:	
A CDC USB device will emulate an RS-232 device, and will appear on your PC as a COM port. The follow functions provide you this virtual RS-232/serial interface	
Note: When using the CDC library, you can use the same functions above, but do not use the packet related function such as usb_kbhit(), usb_get_packet(), etc.	
usb_cdc_kbhit()	The same as kbhit(), returns TRUE if there is 1 or more character in the receive buffer.
usb_cdc_getc()	The same as getc(), reads and returns a character from the receive buffer. If there is no data in the receive buffer it will wait indefinitely until there a character has been received.
usb_cdc_putc(c)	The same as putc(), sends a character. It actually puts a character into the transmit buffer, and if the transmit buffer is full will wait indefinitely until there is space for the character.
usb_cdc_putc_fast(c)	The same as usb_cdc_putc(), but will not wait indefinitely until there is space for the character in the transmit buffer. In that situation the character is lost.
usb_cdc_puts(*str)	Sends a character string (null terminated) to the USB CDC port. Will return FALSE if the buffer is busy, TRUE if buffer is string was put into buffer for sending. Entire string must fit into endpoint, if string is longer than endpoint buffer then excess characters will be ignored.
usb_cdc_putready()	Returns TRUE if there is space in the transmit buffer for another character.
Relevant Preporcessor:	
None	
Relevant Interrupts:	
#int_usb	A USB event has happened, and requires application intervention. The USB library that CCS provides handles this interrupt automatically.
Relevant Include files:	
pic_usb.h	Hardware layer driver for the PIC16C765 family PICmicro controllers with an internal USB peripheral.
pic18_usb.h	Hardware layer driver for the PIC18F4550 family PICmicro controllers with an internal USB peripheral.
usbn960x.h	Hardware layer driver for the National USBN9603/USBN9604 external USB peripheral. You can use this external peripheral to add USB to any microcontroller.
usb.h	Common definitions and prototypes used by the USB driver
usb.c	The USB stack, which handles the USB interrupt and USB Setup Requests on Endpoint 0.
usb_cdc.h	A driver that takes the previous include files to make a CDC USB device, which emulates an RS232 legacy device and shows up as a COM port in the MS Windows

	device manager.
Relevant getenv() Parameters:	
USB	Returns TRUE if the PICmicro controller has an integrated internal USB peripheral.
Example Code:	
Due to the complexity of USB example code will not fit here. But you can find the following examples installed with your CCS C Compiler:	
ex_usb_hid.c	A simple HID device
ex_usb_mouse.c	A HID Mouse, when connected to your PC the mouse cursor will go in circles.
ex_usb_kbmouse.c	An example of how to create a USB device with multiple interfaces by creating a keyboard and mouse in one device.
ex_usb_kbmouse2.c	An example of how to use multiple HID report Ids to transmit more than one type of HID packet, as demonstrated by a keyboard and mouse on one device.
ex_usb_scope.c	A vendor-specific class using bulk transfers is demonstrated.
ex_usb_serial.c	The CDC virtual RS232 library is demonstrated with this RS232 < - > USB example.
ex_usb_serial2.c	Another CDC virtual RS232 library example, this time a port of the ex_intee.c example to use USB instead of RS232.

Voltage Reference

These functions configure the votlage reference module. These are available only in the supported chips.

Relevant Functions:	
setup_vref(mode | value)	Enables and sets up the internal voltage reference value. Constants are defined in the device's .h file.
Relevant Preprocesser: **none**	
Relevant Interrupts: **none**	
Relevant Include Files: **none, all functions built-in**	
Relevant getenv() parameters:	
VREF	Returns 1 if the device has VREF
Example code:	
for PIC12F675	
#INT_COMP //comparator interrupt handler **void isr() {** **safe_conditions = FALSE;** **printf("WARNING!!!! Voltage level is above**	

```
3.6V. \r\n");
}

setup_comparator(A1_VR_OUT_ON_A2)//sets
2 comparators(A1 and VR and A2 as output)
{
   setup_vref(VREF_HIGH | 15);//sets 3.6(vdd
* value/32 + vdd/4) if vdd is 5.0V
   enable_interrupts(INT_COMP); // enable
the comparator interrupt
   enable_interrupts(GLOBAL); //enable
global interrupts
}
```

WDT or Watch Dog Timer

Different chips provide different options to enable/disable or configure the WDT.

Relevant Functions:	
setup_wdt()	Enables/disables the wdt or sets the prescalar.
restart_wdt()	Restarts the wdt, if wdt is enables this must be periodically called to prevent a timeout reset.

For PCB/PCM chips it is enabled/disabled using WDT or NOWDT fuses whereas on PCH device it is done using the setup_wdt function.

The timeout time for PCB/PCM chips are set using the setup_wdt function and on PCH using fuses like WDT16, WDT256 etc.
RESTART_WDT when specified in #USE DELAY, #USE I2C and #USE RS232 statements like this #USE DELAY(clock=20000000, restart_wdt) will cause the wdt to restart if it times out during the delay or I2C_READ or GETC.

Relevant Preprocessor:	
#FUSES WDT/NOWDT	Enabled/Disables wdt in PCB/PCM devices
#FUSES WDT16	Sets ups the timeout time in PCH devices

Relevant Interrupts:
None

Relevant Include Files:
None, all functions built-in

Relevant getenv() parameters:
None

Example Code:
For PIC16F877

```
#fuses wdt
 setup_wdt(WDT_2304MS);
  while(true){
     restart_wdt();
     perform_activity();
```

```
    }
For PIC18F452
#fuse WDT1
setup_wdt(WDT_ON);
while(true){
    restart_wdt();
    perform_activity();
  }
```

Some of the PCB chips are share the WDT prescalar bits with timer0 so the WDT prescalar constants can be used with setup_counters or setup_timer0 or setup_wdt functions.

interrupt_enabled()

This function checks the interrupt enabled flag for the specified interrupt and returns TRUE if set.

Syntax	**interrupt_enabled(interrupt);**
Parameters	interrupt- constant specifying the interrupt
Returns	Boolean value
Function	The function checks the interrupt enable flag of the specified interrupt and returns TRUE when set.
Availability	Devices with interrupts
Requires	Interrupt constants defined in the device's .h file.
Examples	if(interrupt_enabled(INT_RDA)) disable_interrupt(INT_RDA);
Example Files	None
Also see	DISABLE_INTERRUPTS(), , Interrupts Overview, CLEAR_INTERRUPT(), ENABLE_INTERRUPTS(),,INTERRUPT_ACTIVE()

Stream I/O

Syntax:	**#include <ios.h> is required to use any of the ios identifiers.**
Output:	output: stream << variable_or_constant_or_manipulator ; _____ one or more repeats **stream** may be the name specified in the #use RS232 stream= option or for the default stream use cout. **stream** may also be the name of a char array. In this case the data is written to the array with a 0 terminator. **stream** may also be the name of a function that accepts a single char parameter. In this case the function is called for each character to be output. **variables/constants**: May be any integer, char, float or fixed type. Char arrays are output as strings and all other types are output as an address of the variable. **manipulators**: hex -Hex format numbers

dec- Decimal format numbers (default)
setprecision(x) -Set number of places after the decimal point
setw(x) -Set total number of characters output for numbers
boolalpha- Output int1 as true and false
noboolalpha -Output int1 as 1 and 0 (default)
fixed Floats- in decimal format (default)
scientific Floats- use E notation
iosdefault- All manipulators to default settings
endl -Output CR/LF
ends- Outputs a null ('\000')

Examples:

```
cout << "Value is " << hex << data << endl;
cout << "Price is $" << setw(4) << setprecision(2) << cost << endl;
lcdputc << '\f' << setw(3) << count << "    " << min << "    " << max;
string1 << setprecision(1) << sum / count;
string2 << x << ',' << y;
```

Input:

```
stream >> variable_or_constant_or_manipulator  ;
 ____________________________________
                one or more repeats
```

stream may be the name specified in the #use RS232 stream= option
or for the default stream use cin.

stream may also be the name of a char array. In this case the data is
read from the array up to the 0 terminator.

stream may also be the name of a function that returns a single char and has
no parameters. In this case the function is called for each character to be input.
Make sure the function returns a \r to terminate the input statement.

variables/constants: May be any integer, char, float or fixed type. Char arrays are
input as strings. Floats may use the E format.
Reading of each item terminates with any character not valid for the type. Usually
items are separated by spaces. The termination character is discarded. At the end
of any stream input statement characters are read until a return (\r) is read. No
termination character is read for a single char input.

manipulators:
hex -Hex format numbers
dec- Decimal format numbers (default)
noecho- Suppress echoing
strspace- Allow spaces to be input into strings
nostrspace- Spaces terminate string entry (default)
iosdefault -All manipulators to default settings

Examples:

```
cout << "Enter number: ";
cin >> value;
cout << "Enter title: ";
cin >> strspace >> title;
cin >> data[i].recordid >> data[i].xpos >> data[i].ypos >> data[i].sample ;
string1 >> data;
lcdputc << "\fEnter count";
lcdputc << keypadgetc >> count;     // read from keypad, echo to lcd
                                    // This syntax only works with
                                    // user defined functions.
```

PREPROCESSOR

PRE-PROCESSOR DIRECTORY

Pre-processor directives all begin with a # and are followed by a specific command. Syntax is dependent on the command. Many commands do not allow other syntactical elements on the remainder of the line. A table of commands and a description is listed on the previous page.

Several of the pre-processor directives are extensions to standard C. C provides a pre-processor directive that compilers will accept and ignore or act upon the following data. This implementation will allow any pre-processor directives to begin with #PRAGMA. To be compatible with other compilers, this may be used before non-standard features.

Examples:
Both of the following are valid

```
#INLINE
#PRAGMA INLINE
```


__address__ 71
_attribute_x 71
#asm #endasm #asm asis 72
#bit 73
__buildcount__ 74
#build 74
#byte 75
#case 75
date 76
#define 76
definedinc 77
#device 78
device 79
#if expr #else #elif #endif 80
#error 81
#export (options) 81
__file__ 83
__filename__ 83
#fill_rom 83
#fuses 84
#hexcomment 84
#id 85
#if expr #else #elif #endif 85
#ifdef #ifndef #else #elif #endif 86
#ignore_warnings 87
#import (options) 87
#include 88
#inline 88
#int_xxxx 89
#INT_DEFAULT 92
#int_global 92
__line__ 92
#list 93
#line 93
#locate 94
#module 94

#nolist 95
#ocs 95
#opt 96
#org 96
#pin_select 97
__pcb__ 99
__pcm__ 99
__pch__ 99
#pragma 100
#priority 100
#profile 100
#reserve 101
#rom 102
#separate 102
#serialize 103
#task 104
__time__ 105
#type 105
#undef 106
_unicode 106
#use capture 107
#use delay 108
#use dynamic_memory 109
#use fast_io 109
#use fixed_io 110
#use i2c 110
#use profile() 111
#use pwm 112
#use rs232 113
#use rtos 116
#use spi 117
#use standard_io 118
#use timer 119
#use touchpad 120
#warning 121
#word 121
#zero_ram 122

__address__

A predefined symbol __address__ may be used to indicate a type that must hold a program memory address.

For example:

```
___address__ testa = 0x1000  //will allocate 16 bits for test a and
                             //initialize to 0x1000
```

_attribute_x

Syntax:	**__attribute__x**
Elements:	x is the attribute you want to apply. Valid values for x are as follows: **((packed))** By default each element in a struct or union are padded to be evenly spaced by the size of 'int'. This is to prevent an address fault when accessing an element of struct. See the following example: **struct** **{** **int8 a;** **int16 b;** **} test;** On architectures where 'int' is 16bit (such as dsPIC or PIC24 PICmicrocontrollers), 'test' would take 4 bytes even though it is comprised of3 bytes. By applying the 'packed' attribute to this struct then it would take 3 bytes as originally intended: **struct __attribute__((packed))** **{** **int8 a;** **int16 b;** **} test;** Care should be taken by the user when accessing individual elements of a packed struct – creating a pointer to 'b' in 'test' and attempting to dereference that pointer would cause an address fault. Any attempts to read/write 'b' should be done in context of 'test' so the compiler knows it is packed: **test.b = 5;** **((aligned(y))** By default the compiler will alocate a variable in the first free memory location. The aligned attribute will force the compiler to allocate a location for the specified variable at a location that is modulus of the y parameter. For example: **int8 array[256] __attribute__((aligned(0x1000)));** This will tell the compiler to try to place 'array' at either 0x0, 0x1000, 0x2000, 0x3000, 0x4000, etc.
Purpose	To alter some specifics as to how the compiler operates

Examples:	struct __attribute__((packed))
	{
	int8 a;
	int8 b;
	} test;
	int8 array[256] __attribute__((aligned(0x1000)));

Example Files:	None

#asm #endasm #asm asis

Syntax:	**#ASM or #ASM ASIS code #ENDASM**
Elements:	code is a list of assembly language instructions
Examples:	

```
int find_parity(int data){

   int count;
   #asm
   MOV #0x08, W0
   MOV W0, count
   CLR W0
   loop:
   XOR.B data,W0
   RRC data,W0
   DEC count,F
   BRA NZ, loop
   MOV #0x01,W0
   ADD count,F
   MOV count, W0
   MOV W0. _RETURN_
   #endasm
}
```

Example Files:	FFT.c
Also See:	None

12 Bit and 14 Bit	
ADDWF f,d	ANDWF f,d
CLRF f	CLRW
COMF f,d	DECF f,d
DECFSZ f,d	INCF f,d
INCFSZ f,d	IORWF f,d
MOVF f,d	MOVPHW
MOVPLW	MOVWF f
NOP	RLF f,d
RRF f,d	SUBWF f,d
SWAPF f,d	XORWF f,d
BCF f,b	BSF f,b
BTFSC f,b	BTFSS f,b
ANDLW k	CALL k
CLRWDT	GOTO k
IORLW k	MOVLW k
RETLW k	SLEEP
XORLW	OPTION
TRIS k	

	14 Bit
	ADDLW k
	SUBLW k
	RETFIE
	RETURN

f	**may be a constant (file number) or a simple variable**
d	may be a constant (0 or 1) or W or F
f,b	may be a file (as above) and a constant (0-7) or it may be just a bit variable reference.
k	may be a constant expression

Note that all expressions and comments are in C like syntax.

PIC 18					
ADDWF	f,d	ADDWFC	f,d	ANDWF	f,d
CLRF	f	COMF	f,d	CPFSEQ	f
CPFSGT	f	CPFSLT	f	DECF	f,d
DECFSZ	f,d	DCFSNZ	f,d	INCF	f,d
INFSNZ	f,d	IORWF	f,d	MOVF	f,d
MOVFF	fs,d	MOVWF	f	MULWF	f
NEGF	f	RLCF	f,d	RLNCF	f,d
RRCF	f,d	RRNCF	f,d	SETF	f
SUBFWB	f,d	SUBWF	f,d	SUBWFB	f,d
SWAPF	f,d	TSTFSZ	f	XORWF	f,d
BCF	f,b	BSF	f,b	BTFSC	f,b
BTFSS	f,b	BTG	f,d	BC	n
BN	n	BNC	n	BNN	n
BNOV	n	BNZ	n	BOV	n
BRA	n	BZ	n	CALL	n,s
CLRWDT	-	DAW	-	GOTO	n
NOP	-	NOP	-	POP	-
PUSH	-	RCALL	n	RESET	-
RETFIE	s	RETLW	k	RETURN	s
SLEEP	-	ADDLW	k	ANDLW	k
IORLW	k	LFSR	f,k	MOVLB	k
MOVLW	k	MULLW	k	RETLW	k
SUBLW	k	XORLW	k	TBLRD	*
TBLRD	*+	TBLRD	*-	TBLRD	+*
TBLWT	*	TBLWT	*+	TBLWT	*-
TBLWT	+*				

The compiler will set the access bit depending on the value of the file register.

If there is just a variable identifier in the #asm block then the compiler inserts an & before it. And if it is an expression it must be a valid C expression that evaluates to a constant (no & here). In C an un-subscripted array name is a pointer and a constant (no need for &).

#bit

Syntax:	**#BIT** *id* **=** *x***.***y*
Elements:	***id*** is a valid C identifier, ***x*** is a constant or a C variable, ***y*** is a constant 0-7

Purpose:	A new C variable (one bit) is created and is placed in memory at byte x and bit y. This is useful to gain access in C directly to a bit in the processors special function register map. It may also be used to easily access a bit of a standard C variable.

Examples:	`#bit T0IF = 0x b.2`
	`...`
	`T1IF = 0; // Clear Timer 0 interrupt flag`
	
	`int result;`
	`#bit result odd = result.0`
	`...`
	`if (result odd)`

Example Files:	ex_glint.c
Also See:	#BYTE, #RESERVE, #LOCATE, #WORD

__buildcount__

Only defined if Options>Project Options>Global Defines has global defines enabled.

This id resolves to a number representing the number of successful builds of the project.

#build

Syntax:	**#BUILD(***segment* **=** *address***)** **#BUILD(***segment* **=** *address***,** *segment* **=** *address***)** **#BUILD(***segment* **=** *start***:***end***)** **#BUILD(***segment* **=** *start***:** *end***,** *segment* **=** *start***:** *end***)** **#BUILD(***nosleep***)**
Elements:	***segment*** is one of the following memory segments which may be assigned a location: MEMORY, RESET, or INTERRUPT ***address*** is a ROM location memory address. ***Start*** and ***end*** are used to specify a range in memory to be used. ***start*** is the first ROM location and ***end*** is the last ROM location to be used. ***nosleep*** is used to prevent the compiler from inserting a sleep at the end of main() ***Bootload*** produces a bootloader-friendly hex file (in order, full block size). **NOSLEEP_LOCK** is used instead of A sleep at the end of a main A infinite loop.
Purpose:	PIC18XXX devices with external ROM or PIC18XXX devices with no internal ROM can direct the compiler to utilize the ROM. When linking multiple compilation units, this directive must appear exactly the same in each compilation unit.

Examples:	`#build(memory=0x20000:0x2FFFF)  //Assigns memory space`
	`#build(reset=0x200,interrupt=0x208) //Assigns start //location //of reset and //interrupt //vectors`
	`#build(reset=0x200:0x207, interrupt=0x208:0x2ff) //Assign limited space //for reset and //interrupt vectors.`
	`#build(memory=0x20000:0x2FFFF)  //Assigns memory space`

Example Files:	None
Also See:	#LOCATE, #RESERVE, #ROM, #ORG

#byte

Syntax:	**#byte** *id* **=** *x*
Elements:	***id*** is a valid C identifier, ***x*** is a C variable or a constant
Purpose:	If the id is already known as a C variable then this will locate the variable at address x. In this case the variable type does not change from the original definition. If the id is not known a new C variable is created and placed at address x with the type int (8 bit) Warning: In both cases memory at x is not exclusive to this variable. Other variables may be located at the same location. In fact when x is a variable, then id and x share the same memory location.

Examples:

```
#byte  status = 3
#byte  b_port = 6

struct  {
  short int r w;
  short int c_d;
    int unused : 2;
  int data    : 4 ; } a _port;
#byte a port = 5
...
a_port.c_d = 1;
```

Example Files:	ex_glint.c
Also See:	#bit, #locate, #reserve, #word, Named Registers, Type Specifiers, Type Qualifiers, Enumerated Types, Structures & Unions, Typedef

#case

Syntax:	**#CASE**
Elements:	None
Purpose:	Will cause the compiler to be case sensitive. By default the compiler is case insensitive. When

	linking multiple compilation units, this directive must appear exactly the same in each compilation unit. Warning: Not all the CCS example programs, headers and drivers have been tested with case sensitivity turned on.

Examples:	`#case`
	
	`int STATUS;`
	
	`void func() {`
	`int status;`
	`...`
	`STATUS = status; // Copy local status to`
	`//global`
	`}`

Example Files:	ex_cust.c
Also See:	None

date

Syntax:	**__DATE__**
Elements:	None
Purpose:	This pre-processor identifier is replaced at compile time with the date of the compile in the form: ' JAN-03"
Examples:	`printf("Software was compiled on ");` `printf(__DATE__);`
Example Files:	None
Also See:	None

#define

Syntax:	**#define** *id* **text** **or** **#define** *id*(*x*,*y*...) **text**
Elements:	***id*** is a preprocessor identifier, text is any text, ***x***,***y*** is a list of local preprocessor identifiers, and in this form there may be one or more identifiers separated by commas.
Purpose:	Used to provide a simple string replacement of the ID with the given text from this point of the program and on. In the second form (a C macro) the local identifiers are matched up with similar identifiers in the text and they are replaced with text passed to the macro where it is used. If the text contains a string of the form #idx then the result upon evaluation will be the parameter id concatenated with the string x.

If the text contains a string of the form #idx#idy then parameter idx is concatenated with parameter idy forming a new identifier.

Within the define text two special operators are supported:
#x is the stringize operator resulting in "x"
x##y is the concatination operator resulting in xy

The varadic macro syntax is supported where the last parameter is specified as ... and the local identifier used is __va_args__. In this case, all remaining arguments are combined with the commas.

Examples:

```
#define  BITS  8
a=a+BITS;   //same as   a=a+8;


#define hi(x)  (x<<4)
a=hi(a);    //same as   a=(a<<4);

#define isequal(a,b)   (primary_##a[b]==backup_##a[b])
            // usage iseaqual(names,5)  is the same as
            // (primary names[5]==backup names[5])

#define str(s)  #s
#define part(device)  #include str(device##.h)
            // usage part(16F887) is the same as
            // #include "16F887.h"

#define DBG(...)      fprintf(debug,  VA ARGS  )
```

Example Files: ex_stwt.c, ex_macro.c

Also See: #UNDEF, #IFDEF, #IFNDEF

definedinc

Syntax:	**value = definedinc(** *variable* **);**
Parameters:	***variable*** is the name of the variable, function, or type to be checked.
Returns:	A C status for the type of ***id*** entered as follows: 0 – not known 1 – typedef or enum 2 – struct or union type 3 – typemod qualifier 4 – defined function 5 – function prototype 6 – compiler built-in function 7 – local variable 8 – global variable
Function:	This function checks the type of the variable or function being passed in and returns a specific C status based on the type.
Availability:	All devices
Requires:	None.
Examples:	int x, y = 0; y = definedinc(x); // y will return 7 – x is a local variable
Example Files:	None

Also See: None

#device

Syntax: **#DEVICE** *chip options*
#DEVICE *Compilation mode selection*

Elements: ***Chip Options-***

chip is the name of a specific processor (like: PIC16C74), To get a current list of supported devices:

START | RUN | CCSC +Q

Options are qualifiers to the standard operation of the device. Valid options are:

*=5	**Use 5 bit pointers (for all parts)**
*=8	Use 8 bit pointers (14 and 16 bit parts)
*=16	Use 16 bit pointers (for 14 bit parts)
ADC=x	Where x is the number of bits read_adc() should return
ICD=TRUE	Generates code compatible with Microchips ICD debuggin hardware.
ICD=n	For chips with multiple ICSP ports specify the port numbe being used. The default is 1.
WRITE_EEPROM=ASYNC	Prevents WRITE_EEPROM from hanging while writing is taking place. When used, do not write to EEPROM from b ISR and outside ISR.
WRITE_EEPROM = NOINT	Allows interrupts to occur while the write_eeprom() operat is polling the done bit to check if the write operations has completed. Can be used as long as no EEPROM operatio are performed during an ISR.
HIGH_INTS=TRUE	Use this option for high/low priority interrupts on the PIC®
%f=.	No 0 before a decimal pint on %f numbers less than 1.
OVERLOAD=KEYWORD	Overloading of functions is now supported. Requires the of the keyword for overloading.
OVERLOAD=AUTO	Default mode for overloading.
PASS_STRINGS=IN_RAM	A new way to pass constant strings to a function by first copying the string to RAM and then passing a pointer to R to the function.
CONST=READ_ONLY	Uses the ANSI keyword CONST definition, making CONS variables read only, rather than located in program memo
CONST=ROM	Uses the CCS compiler traditional keyword CONST defini making CONST variables located in program memory.
NESTED_INTERRUPTS=TRUE	Enables interrupt nesting for PIC24, dsPIC30, and dsPIC3 devices. Allows higher priority interrupts to interrupt lower priority interrupts.
NORETFIE	ISR functions (preceeded by a #int_xxx) will use a RETUR opcode instead of the RETFIE opcode. This is not a commonly used option; used rarely in cases where the us writing their own ISR handler.
NO_DIGITAL_INIT	Normally the compiler sets all I/O pins to digital and turns the comparator. This option prevents that action.

Both chip and options are optional, so multiple #DEVICE lines may be used to fully define the device. Be warned that a #DEVICE with a chip identifier, will clear all previous #DEVICE and #FUSE settings.

Compilation mode selection-
The #DEVICE directive supports compilation mode selection. The valid keywords are CCS2, CCS3, CCS4 and ANSI. The default mode is CCS4. For the CCS4 and ANSI mode, the compiler uses the default fuse settings NOLVP, PUT for chips with these fuses. The NOWDT fuse is default if no call is made to restart_wdt().

CCS4	**This is the default compilation mode. The pointer size in this mode for PCM and PC is set to *=16 if the part has RAM over 0FF.**
ANSI	Default data type is SIGNED all other modes default is UNSIGNED. Compilation is case sensitive, all other modes are case insensitive. Pointer size is set to *=16 if the part has R over 0FF.
CCS2 CCS3	var16 = NegConst8 is compiled as: var16 = NegConst8 & 0xff (no sign extension) Pointe size is set to *=8 for PCM and PCH and *=5 for PCB . The overload keyword is required.
CCS2 only	The default #DEVICE ADC is set to the resolution of the part, all other modes default to onebit = eightbits is compiled as onebit = (eightbits != 0) All other modes compile as: onebit = (eightbits & 1)

Purpose: ***Chip Options*** -Defines the target processor. Every program must have exactly one #DEVICE with a chip. When linking multiple compilation units, this directive must appear exactly the same in each compilation unit.

Compilation mode selection - The compilation mode selection allows existing code to be compiled without encountering errors created by compiler compliance. As CCS discovers discrepancies in the way expressions are evaluated according to ANSI, the change will generally be made only to the ANSI mode and the next major CCS release.

Examples: ***Chip Options-***

```
#device PIC16C74
#device PIC16C67 *=16
#device *=16  ICD=TRUE
#device PIC16F877 *=16 ADC=10
#device %f=.
printf("%f",.5); //will print .5, without the directive it will print 0.5
```

Compilation mode selection-

```
#device CCS2    // This will set the ADC to the resolution of the part
```

Example Files: ex_mxram.c , ex_icd.c , 16c74.h ,

Also See: read_adc()

device

Syntax: **__DEVICE__**

Elements: None

Purpose:	This pre-processor identifier is defined by the compiler with the base number of the current device (from a #DEVICE). The base number is usually the number after the C in the part number. For example the PIC16C622 has a base number of 622.

Examples:	`#if __device__==71`
	`SETUP_ADC_PORTS( ALL_DIGITAL );`
	`#endif`

Example Files:	None
Also See:	#DEVICE

#if expr #else #elif #endif

Syntax:	**#if** *expr* *code* **#elif expr** **//Optional, any number may be used** *code* **#else** **//Optional** *code* **#endif**
Elements:	***expr*** is an expression with constants, standard operators and/or preprocessor identifiers. ***Code*** is any standard c source code.
Purpose:	The pre-processor evaluates the constant expression and if it is non-zero will process the lines up to the optional #ELSE or the #ENDIF. Note: you may NOT use C variables in the #IF. Only preprocessor identifiers created via #define can be used. The preprocessor expression DEFINED(id) may be used to return 1 if the id is defined and 0 if it is not. == and != operators now accept a constant string as both operands. This allows for compile time comparisons and can be used with GETENV() when it returns a string result.

Examples:	`#if MAX_VALUE > 255`
	`  long value;`
	`#else`
	`  int value;`
	`#endif`
	`#if getenv("DEVICE")=="PIC16F877"`
	`  //do something special for the PIC16F877`
	`#endif`

Example Files:	ex_extee.c
Also See:	#IFDEF, #IFNDEF, getenv()

#error

Syntax:	**#ERROR** *text* **#ERROR / warning** *text* **#ERROR / information** *text*
Elements:	***text*** is optional and may be any text
Purpose:	Forces the compiler to generate an error at the location this directive appears in the file. The text may include macros that will be expanded for the display. This may be used to see the macro expansion. The command may also be used to alert the user to an invalid compile time situation.

Examples:	`#if BUFFER_SIZE>16`
	`#error Buffer size is too large`
	`#endif`
	`#error Macro test: min(x,y)`

Example Files:	ex_psp.c
Also See:	#WARNING

#export (options)

Syntax:	**#EXPORT (options)**
Elements:	***FILE=filname*** The filename which will be generated upon compile. If not given, the filname will be the name of the file you are compiling, with a .o or .hex extension (depending on output format). ***ONLY=symbol+symbol+.....+symbol*** Only the listed symbols will be visible to modules that import or link this relocatable object file. If neither ONLY or EXCEPT is used, all symbols are exported. ***EXCEPT=symbol+symbol+.....+symbol*** All symbols except the listed symbols will be visible to modules that import or link this relocatable object file. If neither ONLY or EXCEPT is used, all symbols are exported. ***RELOCATABLE*** CCS relocatable object file format. Must be imported or linked before loading into a PIC. This is the default format when the #EXPORT is used. ***HEX*** Intel HEX file format. Ready to be loaded into a PIC. This is the default format when no #EXPORT is used. ***RANGE=start:stop*** Only addresses in this range are included in the hex file. ***OFFSET=address*** Hex file address starts at this address (0 by default) ***ODD*** Only odd bytes place in hex file. ***EVEN*** Only even bytes placed in hex file.

Purpose:	This directive will tell the compiler to either generate a relocatable object file or a stand-alone HEX binary. A relocatable object file must be linked into your application, while a stand-alone HEX binary can be programmed directly into the PIC. The command line compiler and the PCW IDE Project Manager can also be used to compile/link/build modules and/or projects. Multiple #EXPORT directives may be used to generate multiple hex files. this may be used for 8722 like devices with external memory.

Examples:	`#EXPORT(RELOCATABLE, ONLY=TimerTask)`
	`void TimerFunc1(void) { /* some code */ }`
	`void TimerFunc2(void) { /* some code */ }`
	`void TimerFunc3(void) { /* some code */ }`
	`void TimerTask(void)`
	`{`
	`  TimerFunc1();`
	`  TimerFunc2();`
	`  TimerFunc3();`
	`}`
	`/*`
	`This source will be compiled into a relocatable object, but the object this is being linked to can only see TimerTask()`
	`*/`

Example Files:	None
See Also:	#IMPORT, #MODULE, Invoking the Command Line Compiler, Multiple Compilation Unit

__file__

Syntax:	**__FILE__**
Elements:	None
Purpose:	The pre-processor identifier is replaced at compile time with the file path and the filename of the file being compiled.

Examples:	`if(index>MAX_ENTRIES)`
	`  printf("Too many entries, source file: "`
	`  __FILE__ " at line " __LINE__ "\r\n");`

Example Files:	assert.h
Also See:	__line__

__filename__

Syntax:	**__FILENAME__**
Elements:	None
Purpose:	The pre-processor identifier is replaced at compile time with the filename of the file being compiled.

Examples:	`if(index>MAX_ENTRIES)`
	`  printf("Too many entries, source file: "`
	`  __FILENAME__ " at line " __LINE__ "\r\n");`

Example Files:	None
Also See:	__line__

#fill_rom

Syntax:	**#fill_rom** *value*
Elements:	***value*** is a constant 16-bit value
Purpose:	This directive specifies the data to be used to fill unused ROM locations. When linking multiple compilation units, this directive must appear exactly the same in each compilation unit.
Examples:	`#fill_rom 0x36`
Example Files:	None
Also See:	#ROM

#fuses

Syntax:	**#FUSES** *options*
Elements:	***options*** vary depending on the device. A list of all valid options has been put at the top of each devices .h file in a comment for reference. The PCW device edit utility can modify a particular devices fuses. The PCW pull down menu VIEW | Valid fuses will show all fuses with their descriptions. Some common options are: • LP, XT, HS, RC • WDT, NOWDT • PROTECT, NOPROTECT • PUT, NOPUT (Power Up Timer) • BROWNOUT, NOBROWNOUT
Purpose:	This directive defines what fuses should be set in the part when it is programmed. This directive does not affect the compilation; however, the information is put in the output files. If the fuses need to be in Parallax format, add a PAR option. SWAP has the special function of swapping (from the Microchip standard) the high and low BYTES of non-program data in the Hex file. This is required for some device programmers. Some fuses are set by the compiler based on other compiler directives. For example, the oscillator fuses are set up by the #USE delay directive. The debug, No debug and ICSPN Fuses are set by the #DEVICE ICD=directive. Some processors allow different levels for certain fuses. To access these levels, assign a value to the fuse. For example, on the 18F452, the fuse PROTECT=6 would place the value 6 into CONFIG5L, protecting code blocks 0 and 3. When linking multiple compilation units be aware this directive applies to the final object file. Later files in the import list may reverse settings in previous files. To eliminate all fuses in the output files use: #FUSES none To manually set the fuses in the output files use: #FUSES 1 = 0xC200 // sets config word 1 to 0xC200
Examples:	`#fuses HS,NOWDT`
Example Files:	ex_sqw.c
Also See:	None

#hexcomment

Syntax:	**#HEXCOMMENT text comment for the top of the hex file** **#HEXCOMMENT\ text comment for the end of the hex file**
Elements:	None

Purpose:	Puts a comment in the hex file Some programmers (MPLAB in particular) do not like comments at the top of the hex file.
Examples:	`#HEXCOMMENT Version 3.1 - requires 20MHz crystal`
Example Files:	None
Also See:	None

#id

Syntax:	**#ID** *number 16* **#ID** *number*, *number*, *number*, *number* **#ID** *"filename"* **#ID** *CHECKSUM*
Elements:	***Number 16*** is a 16 bit number, ***number*** is a 4 bit number, filename is any valid PC filename and ***checksum*** is a keyword.
Purpose:	This directive defines the ID word to be programmed into the part. This directive does not affect the compilation but the information is put in the output file. The first syntax will take a 16 -bit number and put one nibble in each of the four ID words in the traditional manner. The second syntax specifies the exact value to be used in each of the four ID words . When a filename is specified the ID is read from the file. The format must be simple text with a CR/LF at the end. The keyword CHECKSUM indicates the device checksum should be saved as the ID.

Examples:	`#id 0x1234`
	`#id "serial.num"`
	`#id CHECKSUM`

Example Files:	ex_cust.c
Also See:	None

#if expr #else #elif #endif

Syntax:	**#if** *expr* *code* **#elif expr** **//Optional, any number may be used** *code* **#else** **//Optional** *code* **#endif**
Elements:	***expr*** is an expression with constants, standard operators and/or preprocessor identifiers. ***Code*** is any standard c source code.

Purpose:	The pre-processor evaluates the constant expression and if it is non-zero will process the lines up to the optional #ELSE or the #ENDIF. Note: you may NOT use C variables in the #IF. Only preprocessor identifiers created via #define can be used. The preprocessor expression DEFINED(id) may be used to return 1 if the id is defined and 0 if it is not. == and != operators now accept a constant string as both operands. This allows for compile time comparisons and can be used with GETENV() when it returns a string result.

Examples:	`#if MAX_VALUE > 255`
	`  long value;`
	`#else`
	`  int value;`
	`#endif`
	`#if getenv("DEVICE")=="PIC16F877"`
	`  //do something special for the PIC16F877`
	`#endif`

Example Files:	ex_extee.c
Also See:	#IFDEF, #IFNDEF, getenv()

#ifdef #ifndef #else #elif #endif

Syntax:	**#IFDEF** *id*
	  code
	#ELIF
	  code
	#ELSE
	  code
	#ENDIF
	
	#IFNDEF *id*
	  code
	#ELIF
	  code
	#ELSE
	  code
	#ENDIF

Elements:	***id*** is a preprocessor identifier, ***code*** is valid C source code.
Purpose:	This directive acts much like the #IF except that the preprocessor simply checks to see if the specified ID is known to the preprocessor (created with a #DEFINE). #IFDEF checks to see if defined and #IFNDEF checks to see if it is not defined.

Examples:	`#define debug  // Comment line out for no debug`
	
	`...`
	`#ifdef  DEBUG`
	`printf("debug point a");`
	`#endif`

Example Files:	ex_sqw.c

Also See:	#IF

#ignore_warnings

Syntax:	**#ignore_warnings ALL** **#IGNORE_WARNINGS NONE** **#IGNORE_WARNINGS** *warnings*
Elements:	***warnings*** is one or more warning numbers separated by commas
Purpose:	This function will suppress warning messages from the compiler. ALL indicates no warning will be generated. NONE indicates all warnings will be generated. If numbers are listed then those warnings are suppressed.

Examples:	`#ignore_warnings 203`
	`while(TRUE) {`
	`#ignore_warnings NONE`

Example Files:	None
Also See:	Warning messages

#import (options)

Syntax:	**#IMPORT (options)**
Elements:	***FILE=filname*** The filename of the object you want to link with this compilation. ***ONLY=symbol+symbol+.....+symbol*** Only the listed symbols will imported from the specified relocatable object file. If neither ONLY or EXCEPT is used, all symbols are imported. **EXCEPT=symbol+symbol+.....+symbol** The listed symbols will not be imported from the specified relocatable object file. If neither ONLY or EXCEPT is used, all symbols are imported. ***RELOCATABLE*** CCS relocatable object file format. This is the default format when the #IMPORT is used. ***COFF*** COFF file format from MPASM, C18 or C30. ***HEX*** Imported data is straight hex data. ***RANGE=start:stop*** Only addresses in this range are read from the hex file. ***LOCATION=id*** The identifier is made a constant with the start address of the imported data. ***SIZE=id***

	The identifier is made a constant with the size of the imported data.
Purpose:	This directive will tell the compiler to include (link) a relocatable object with this unit during compilation. Normally all global symbols from the specified file will be linked, but the EXCEPT and ONLY options can prevent certain symbols from being linked. The command line compiler and the PCW IDE Project Manager can also be used to compile/link/build modules and/or projects.

Examples:	`#IMPORT(FILE=timer.o, ONLY=TimerTask)`
	`void main(void)`
	`{`
	`  while(TRUE)`
	`  TimerTask();`
	`}`
	`/*`
	`timer.o is linked with this compilation, but only TimerTask() is visible in scope from this object.`
	`*/`

Example Files:	None
See Also:	#EXPORT, #MODULE, Invoking the Command Line Compiler, Multiple Compilation Unit

#include

Syntax:	**#INCLUDE <***filename***>** **or** **#INCLUDE "***filename***"**
Elements:	***filename*** is a valid PC filename. It may include normal drive and path information. A file with the extension ".encrypted" is a valid PC file. The standard compiler #INCLUDE directive will accept files with this extension and decrypt them as they are read. This allows include files to be distributed without releasing the source code.
Purpose:	Text from the specified file is used at this point of the compilation. If a full path is not specified the compiler will use the list of directories specified for the project to search for the file. If the filename is in "" then the directory with the main source file is searched first. If the filename is in <> then the directory with the main source file is searched last.

Examples:	`#include <16C54.H>`
	
	`#include <C:\INCLUDES\COMLIB\MYRS232.C>`

Example Files:	ex_sqw.c
Also See:	None

#inline

Syntax:	**#INLINE**
Elements:	None

Purpose:	Tells the compiler that the function immediately following the directive is to be implemented INLINE. This will cause a duplicate copy of the code to be placed everywhere the function is called. This is useful to save stack space and to increase speed. Without this directive the compiler will decide when it is best to make procedures INLINE.

Examples:	`#inline`
	`swapbyte(int &a, int &b) {`
	`  int t;`
	`  t=a;`
	`  a=b;`
	`  b=t;`
	`}`

Example Files:	ex_cust.c
Also See:	#SEPARATE

#int_xxxx

Syntax:

#INT_AD	**Analog to digital conversion complete**
#INT_ADOF	Analog to digital conversion timeout
#INT_BUSCOL	Bus collision
#INT_BUSCOL2	Bus collision 2 detected
#INT_BUTTON	Pushbutton
#INT_CANERR	An error has occurred in the CAN module
#INT_CANIRX	An invalid message has occurred on the CAN bus
#INT_CANRX0	CAN Receive buffer 0 has received a new message
#INT_CANRX1	CAN Receive buffer 1 has received a new message
#INT_CANTX0	CAN Transmit buffer 0 has completed transmission
#INT_CANTX1	CAN Transmit buffer 0 has completed transmission
#INT_CANTX2	CAN Transmit buffer 0 has completed transmission
#INT_CANWAKE	Bus Activity wake-up has occurred on the CAN bus
#INT_CCP1	Capture or Compare on unit 1
#INT_CCP2	Capture or Compare on unit 2
#INT_CCP3	Capture or Compare on unit 3
#INT_CCP4	Capture or Compare on unit 4
#INT_CCP5	Capture or Compare on unit 5
#INT_COMP	Comparator detect
#INT_COMP0	Comparator 0 detect
#INT_COMP1	Comparator 1 detect
#INT_COMP2	Comparator 2 detect
#INT_CR	Cryptographic activity complete

#INT_EEPROM	Write complete
#INT_ETH	Ethernet module interrupt
#INT_EXT	External interrupt
#INT_EXT1	External interrupt #1
#INT_EXT2	External interrupt #2
#INT_EXT3	External interrupt #3
#INT_I2C	I2C interrupt (only on 14000)
#INT_IC1	Input Capture #1
#INT_IC2QEI	Input Capture 2 / QEI Interrupt
#IC3DR	Input Capture 3 / Direction Change Interrupt
#INT_LCD	LCD activity
#INT_LOWVOLT	Low voltage detected
#INT_LVD	Low voltage detected
#INT_OSC_FAIL	System oscillator failed
#INT_OSCF	System oscillator failed
#INT_PMP	Parallel Master Port interrupt
#INT_PSP	Parallel Slave Port data in
#INT_PWMTB	PWM Time Base
#INT_RA	Port A any change on A0_A5
#INT_RB	Port B any change on B4-B7
#INT_RC	Port C any change on C4-C7
#INT_RDA	RS232 receive data available
#INT_RDA0	RS232 receive data available in buffer 0
#INT_RDA1	RS232 receive data available in buffer 1
#INT_RDA2	RS232 receive data available in buffer 2
#INT_RTCC	Timer 0 (RTCC) overflow
#INT_SPP	Streaming Parallel Port Read/Write
#INT_SSP	SPI or I2C activity
#INT_SSP2	SPI or I2C activity for Port 2
#INT_TBE	RS232 transmit buffer empty
#INT_TBE0	RS232 transmit buffer 0 empty
#INT_TBE1	RS232 transmit buffer 1 empty
#INT_TBE2	RS232 transmit buffer 2 empty
#INT_TIMER0	Timer 0 (RTCC) overflow
#INT_TIMER1	Timer 1 overflow
#INT_TIMER2	Timer 2 overflow
#INT_TIMER3	Timer 3 overflow
#INT_TIMER4	Timer 4 overflow
#INT_TIMER5	Timer 5 overflow
#INT_ULPWU	Ultra-low power wake up interrupt

#INT_USB	Universal Serial Bus activity

Note many more #INT_ options are available on specific chips. Check the devices .h file for a full list for a given chip.

Elements: None

Purpose: These directives specify the following function is an interrupt function. Interrupt functions may not have any parameters. Not all directives may be used with all parts. See the devices .h file for all valid interrupts for the part or in PCW use the pull down VIEW | Valid Ints

The compiler will generate code to jump to the function when the interrupt is detected. It will generate code to save and restore the machine state, and will clear the interrupt flag. To prevent the flag from being cleared add NOCLEAR after the #INT_xxxx. The application program must call ENABLE_INTERRUPTS(INT_xxxx) to initially activate the interrupt along with the ENABLE_INTERRUPTS(GLOBAL) to enable interrupts.

The keywords HIGH and FAST may be used with the PCH compiler to mark an interrupt as high priority. A high-priority interrupt can interrupt another interrupt handler. An interrupt marked FAST is performed without saving or restoring any registers. You should do as little as possible and save any registers that need to be saved on your own. Interrupts marked HIGH can be used normally. See #DEVICE for information on building with high-priority interrupts.

A summary of the different kinds of PIC18 interrupts:

#INT_xxxx
Normal (low priority) interrupt. Compiler saves/restores key registers.
This interrupt will not interrupt any interrupt in progress.

#INT_xxxx FAST
High priority interrupt. Compiler DOES NOT save/restore key registers.
This interrupt will interrupt any normal interrupt in progress.
Only one is allowed in a program.

#INT_xxxx HIGH
High priority interrupt. Compiler saves/restores key registers.
This interrupt will interrupt any normal interrupt in progress.

#INT_xxxx NOCLEAR
The compiler will not clear the interrupt.
The user code in the function should call clear_interrput( ) to
clear the interrupt in this case.

#INT_GLOBAL
Compiler generates no interrupt code. User function is located
at address 8 for user interrupt handling.

Some interrupts shown in the devices header file are only for the enable/disable interrupts. For example, INT_RB3 may be used in enable/interrupts to enable pin B3. However, the interrupt handler is #INT_RB.

Similarly INT_EXT_L2H sets the interrupt edge to falling and the handler is #INT_EXT.

Examples:

```
#int_ad
adc handler() {
   adc_active=FALSE;
}

#int_rtcc noclear
isr() {
        ...
}
```

Example Files: See ex_sisr.c and ex_stwt.c for full example programs.

Also See: enable_interrupts(), disable_interrupts(), #INT_DEFAULT, #INT_GLOBAL, #PRIORITY

#INT_DEFAULT

Syntax:	**#INT_DEFAULT**
Elements:	None
Purpose:	The following function will be called if the PIC® triggers an interrupt and none of the interrupt flags are set. If an interrupt is flagged, but is not the one triggered, the #INT_DEFAULT function will get called.

Examples:	`#int_default`
	`default_isr() {`
	`  printf("Unexplained interrupt\r\n");`
	`}`

Example Files:	None
Also See:	#INT_xxxx, #INT_global

#int_global

Syntax:	**#INT_GLOBAL**
Elements:	None
Purpose:	This directive causes the following function to replace the compiler interrupt dispatcher. The function is normally not required and should be used with great caution. When used, the compiler does not generate start-up code or clean-up code, and does not save the registers.

Examples:	`#int_global`
	`isr() {  // Will be located at location 4 for PIC16 chips.`
	`  #asm`
	`  bsf  isr_flag`
	`  retfie`
	`  #endasm`
	`}`

Example Files:	ex_glint.c
Also See:	#INT_xxxx

__line__

Syntax:	**__line__**
Elements:	None
Purpose:	The pre-processor identifier is replaced at compile time with line number of the file

	being compiled.

Examples:	`if(index>MAX_ENTRIES)`
	`  printf("Too many entries, source file: "`
	`  FILE  " at line "  LINE  "\r\n");`

Example Files:	assert.h
Also See:	__file__

#list

Syntax:	**#LIST**
Elements:	None
Purpose:	#LIST begins inserting or resumes inserting source lines into the .LST file after a #NOLIST.

Examples:	`#NOLIST  // Don't clutter up the list file`
	`#include <cdriver.h>`
	`#LIST`

Example Files:	16c74.h
Also See:	#NOLIST

#line

Syntax:	**#LINE number file name**
Elements:	Number is non-negative decimal integer. File name is optional.
Purpose:	The C pre-processor informs the C Compiler of the location in your source code. This code is simply used to change the value of _LINE_ and _FILE_ variables.

Examples:	`1. void main(){`
	`  #line 10  // specifies the line number that`
	`  // should be reported for`
	`  // the following line of input`
	
	`2. #line 7 "hello.c"`
	`  // line number in the source file`
	`  // hello.c and it sets the`
	`  // line 7 as current line`
	`  // and hello.c as current file`

Example Files:	None
Also See:	None

#locate

Syntax:	**#LOCATE** *id=x*
Elements:	***id*** is a C variable, ***x*** is a constant memory address
Purpose:	#LOCATE allocates a C variable to a specified address. If the C variable was not previously defined, it will be defined as an INT8. A special form of this directive may be used to locate all A functions local variables starting at a fixed location. Use: #LOCATE Auto = address This directive will place the indirected C variable at the requested address.

Examples:	`// This will locate the float variable at 50-53`
	`// and C will not use this memory for other`
	`// variables automatically located.`
	`float x;`
	`#locate x=0x 50`

Example Files:	ex_glint.c
Also See:	#byte, #bit, #reserve, #word, Named Registers, Type Specifiers, Type Qualifiers, Enumerated Types, Structures & Unions, Typedef

#module

Syntax:	**#MODULE**
Elements:	None
Purpose:	All global symbols created from the #MODULE to the end of the file will only be visible within that same block of code (and files #INCLUDE within that block). This may be used to limit the scope of global variables and functions within include files. This directive also applies to pre-processor #defines. Note: The extern and static data qualifiers can also be used to denote scope of variables and functions as in the standard C methodology. #MODULE does add some benefits in that pre-processor #DEFINE can be given scope, which cannot normally be done in standard C methodology.

Examples:	`int GetCount(void);`
	`void SetCount(int newCount);`
	`#MODULE`
	`int g_count;`
	`#define G_COUNT_MAX  100`
	`int GetCount(void) {return(g count);}`
	`void SetCount(int newCount) {`
	`  if (newCount>G COUNT MAX)`
	`  newCount=G_COUNT_MAX;`
	`  g_count=newCount;`
	`}`
	`/*`
	`the functions GetCount() and SetCount() have global scope, but the`
	`variable g_count and the #define G_COUNT_MAX only has scope to this`

	file. */
Example Files:	None
See Also:	#EXPORT, Invoking the Command Line Compiler, Multiple Compilation Unit

#nolist

Syntax:	**#NOLIST**
Elements:	None
Purpose:	Stops inserting source lines into the .LST file (until a #LIST)

Examples:	`#NOLIST  // Don't clutter up the list file`
	`#include <cdriver.h>`
	`#LIST`

Example Files:	16c74.h
Also See:	#LIST

#ocs

Syntax:	**#OCS x**
Elements:	x is the clock's speed and can be 1 Hz to 100 MHz.
Purpose:	Used instead of the #use delay(clock = x)

Examples:	`#include <18F4520.h>`
	`#device ICD=TRUE`
	`#OCS 20 MHz`
	`#use rs232(debugger)`
	
	`void main(){`
	`  -------;`
	`  }`

Example Files:	None
Also See:	#USE DELAY

#opt

Syntax:	**#OPT** *n*
Elements:	All Devices: ***n*** is the optimization level 1-11 or by using the word "compress" for PIC18 and Enhanced PIC16 families.
Purpose:	The optimization level is set with this directive. This setting applies to the entire program and may appear anywhere in the file. The PCW default is 9 for normal. When Compress is specified the optimization is set to an extreme level that causes a very tight rom image, the code is optimized for space, not speed. Debugging with this level my be more difficult.
Examples:	`#opt 5`
Example Files:	None
Also See:	None

#org

Syntax:	**#ORG** *start*, *end* **or** **#ORG** *segment* **or** **#ORG** *start*, *end { }* **or** **#ORG** *start*, *end auto=0* **#ORG** *start*,*end DEFAULT* **or** **#ORG** *DEFAULT*
Elements:	***start*** is the first ROM location (word address) to use, ***end*** is the last ROM location, ***segment*** is the start ROM location from a previous #ORG
Purpose:	This directive will fix the following function, constant or ROM declaration into a specific ROM area. End may be omitted if a segment was previously defined if you only want to add another function to the segment. Follow the ORG with a { } to only reserve the area with nothing inserted by the compiler. The RAM for a ORG'd function may be reset to low memory so the local variables and scratch variables are placed in low memory. This should only be used if the ORG'd function will not return to the caller. The RAM used will overlap the RAM of the main program. Add a AUTO=0 at the end of the #ORG line. If the keyword DEFAULT is used then this address range is used for all functions user and compiler generated from this point in the file until a #ORG DEFAULT is encountered (no address range). If a compiler function is called from the generated code while DEFAULT is in effect the compiler generates a new version of the function within the specified address range. #ORG may be used to locate data in ROM. Because CONSTANT are implemented as functions the #ORG should proceed the CONSTANT and needs a start and end address. For a ROM declaration only the start address should be specified.

When linking multiple compilation units be aware this directive applies to the final object file. It is an error if any #ORG overlaps between files unless the #ORG matches exactly.

Examples:

```
#ORG 0x1E00, 0x1FFF
MyFunc() {
//This function located at 1E00
}

#ORG 0x1E00
Anotherfunc(){
// This will be somewhere 1E00-1F00
}

#ORG 0x800, 0x820 {}
//Nothing will be at 800-820

#ORG 0x1B80
ROM int32 seridl N0=12345;

#ORG 0x1C00, 0x1C0F
CHAR CONST ID[10}= {"123456789"};
//This ID will be at 1C00
//Note some extra code will
//proceed the 123456789

#ORG 0x1F00, 0x1FF0
Void loader (){
.
.
.
}
```

Example Files: loader.c

Also See: #ROM

#pin_select

Syntax: **#PIN_SELECT function=pin_xx**

Elements: *function* is the Microchip defined pin function name, such as: U1RX (UART1 receive), INT1 (external interrupt 1), T2CK (timer 2 clock), IC1 (input capture 1), OC1 (output capture 1).

INT1	External Interrupt 1
INT2	External Interrupt 2
INT3	External Interrupt 3
T0CK	Timer0 External Clock
T3CK	Timer3 External Clock
CCP1	Input Capture 1
CCP2	Input Capture 2
T1G	Timer1 Gate Input
T3G	Timer3 Gate Input
U2RX	EUSART2 Asynchronous Receive/Synchronous Receive (also named: RX2)
U2CK	EUSART2 Asynchronous Clock Input

SDI2	SPI2 Data Input
SCK2IN	SPI2 Clock Input
SS2IN	SPI2 Slave Select Input
FLT0	PWM Fault Input
T0CKI	Timer0 External Clock Input
T3CKI	Timer3 External Clock Input
RX2	EUSART2 Asynchronous Transmit/Asynchronous Clock Output (also named: TX2)
NULL	NULL
C1OUT	Comparator 1 Output
C2OUT	Comparator 2 Output
U2TX	EUSART2 Asynchronous Transmit/ Asynchronous Clock Output (also named: TX2)
U2DT	EUSART2 Synchronous Transmit (also named: DT2)
SDO2	SPI2 Data Output
SCK2OUT	SPIC2 Clock Output
SS2OUT	SPI2 Slave Select Output
ULPOUT	Ultra Low-Power Wake-Up Event
P1A	ECCP1 Compare or PWM Output Channel A
P1B	ECCP1 Enhanced PWM Output, Channel B
P1C	ECCP1 Enhanced PWM Output, Channel C
P1D	ECCP1 Enhanced PWM Output, Channel D
P2A	ECCP2 Compare or PWM Output Channel A
P2B	ECCP2 Enhanced PWM Output, Channel B
P2C	ECCP2 Enhanced PWM Output, Channel C
P2D	ECCP1 Enhanced PWM Output, Channel D
TX2	EUSART2 Asynchronous Transmit/Asynchronous Clock Output (also named: TX2)
DT2	EUSART2 Synchronous Transmit (also named: U2DT)
SCK2	SPI2 Clock Output
SSDMA	SPI DMA Slave Select

pin_xx is the CCS provided pin definition. For example: PIN_C7, PIN_B0, PIN_D3, etc.

Purpose: When using PPS chips a #PIN_SELECT must be appear before these peripherals can be used or referenced.

Examples:

```
#pin_select U1TX=PIN_C6
#pin_select U1RX=PIN_C7
#pin_select INT1=PIN_B0
```

Example Files: None

Also See: None

__pcb__

Syntax:	**__PCB__**
Elements:	None
Purpose:	The PCB compiler defines this pre-processor identifier. It may be used to determine if the PCB compiler is doing the compilation.

Examples:	`#ifdef __pcb__`
	`#device PIC16c54`
	`#endif`

Example Files:	ex_sqw.c
Also See:	__PCM__, __PCH__

__pcm__

Syntax:	**__PCM__**
Elements:	None
Purpose:	The PCM compiler defines this pre-processor identifier. It may be used to determine if the PCM compiler is doing the compilation.

Examples:	`#ifdef  pcm`
	`#device PIC16c71`
	`#endif`

Example Files:	ex_sqw.c
Also See:	__PCB__, __PCH__

__pch__

Syntax:	**__PCH__**
Elements:	None
Purpose:	The PCH compiler defines this pre-processor identifier. It may be used to determine if the PCH compiler is doing the compilation.

Examples:	`#ifdef __ PCH _ _`
	`#device PIC18C452`
	`#endif`

Example Files:	ex_sqw.c
Also See:	__PCB__, __PCM__

#pragma

Syntax:	**#PRAGMA** *cmd*
Elements:	***cmd*** is any valid preprocessor directive.
Purpose:	This directive is used to maintain compatibility between C compilers. This compiler will accept this directive before any other pre-processor command. In no case does this compiler require this directive.
Examples:	`#pragma device  PIC16C54`
Example Files:	ex_cust.c
Also See:	None

#priority

Syntax:	**#PRIORITY** *ints*
Elements:	***ints*** is a list of one or more interrupts separated by commas. ***export*** makes the functions generated from this directive available to other compilation units within the link.
Purpose:	The priority directive may be used to set the interrupt priority. The highest priority items are first in the list. If an interrupt is active it is never interrupted. If two interrupts occur at around the same time then the higher one in this list will be serviced first. When linking multiple compilation units be aware only the one in the last compilation unit is used.
Examples:	`#priority rtcc,rb`
Example Files:	None
Also See:	#INT_xxxx

#profile

Syntax:	**#profile options**
Elements:	***options*** may be one of the following:

functions	**Profiles the start/end of functions and all profileout() messages.**

functions, parameters	Profiles the start/end of functions, parameters sent to functions, and all profileout() messages.
profileout	Only profile profilout() messages.
paths	Profiles every branch in the code.
off	Disable all code profiling.
on	Re-enables the code profiling that was previously disabled with a #profile off command. This will use the last options before disabled with the off command.

Purpose: Large programs on the microcontroller may generate lots of profile data, which may make it difficult to debug or follow. By using #profile the user can dynamically control which points of the program are being profiled, and limit data to what is relevant to the user.

Examples:

```
#profile off
void BigFunction(void)
{
    // BigFunction code goes here.
    // Since #profile off was called above,
    // no profiling will happen even for other
    // functions called by BigFunction().
}
#profile on
```

Example Files: ex_profile.c

Also See: #use profile(), profileout(), Code Profile overview

#reserve

Syntax: **#RESERVE** *address*
or
#RESERVE *address*, *address*, *address*
or
#RESERVE *start*:*end*

Elements: ***address*** is a RAM address, ***start*** is the first address and ***end*** is the last address

Purpose: This directive allows RAM locations to be reserved from use by the compiler. #RESERVE must appear after the #DEVICE otherwise it will have no effect. When linking multiple compilation units be aware this directive applies to the final object file.

Examples:

```
#DEVICE PIC16C74
#RESERVE    0x60:0X6f
```

Example Files: ex_cust.c

Also See: #ORG

#rom

Syntax:	**#ROM** *address* **= {***list***}** **#ROM type** *address* **= {***list***}**
Elements:	***address*** is a ROM word address, ***list*** is a list of words separated by commas
Purpose:	Allows the insertion of data into the .HEX file. In particular, this may be used to program the '84 data EEPROM, as shown in the following example. Note that if the #ROM address is inside the program memory space, the directive creates a segment for the data, resulting in an error if a #ORG is over the same area. The #ROM data will also be counted as used program memory space. The type option indicates the type of each item, the default is 16 bits. Using char as the type treats each item as 7 bits packing 2 chars into every pcm 14-bit word. When linking multiple compilation units be aware this directive applies to the final object file. Some special forms of this directive may be used for verifying program memory: #ROM address = checksum This will put a value at address such that the entire program memory will sum to 0x1248 #ROM address = crc16 This will put a value at address that is a crc16 of all the program memory except the specified address #ROM address = crc8 This will put a value at address that is a crc16 of all the program memory except the specified address
Examples:	`#rom getnev ("EEPROM_ADDRESS")={1,2,3,4,5,6,7,8}` `#rom int8 0x1000={"(c)CCS, 2010"}`
Example Files:	None
Also See:	#ORG

#separate

Syntax:	**#SEPARATE**
Elements:	None
Purpose:	Tells the compiler that the procedure IMMEDIATELY following the directive is to be implemented SEPARATELY. This is useful to prevent the compiler from automatically making a procedure INLINE. This will save ROM space but it does use more stack space. The compiler will make all procedures marked SEPARATE, separate, as requested, even if there is not enough stack space to execute.

Examples:	`#separate`
	`swapbyte (int *a, int *b) {`
	`int t;`
	`  t=*a;`

```
    *a=*b;
    *b=t;
}
```

Example Files: ex_cust.c

Also See: #INLINE

#serialize

Syntax:

#SERIALIZE(*id=xxx*, *next="x"* **|** *file="filename.txt"* **"** **|** *listfile="filename.txt"*, *"prompt="text"*, *log="filename.txt"*) **-**
or
#SERIALIZE(*dataee=x*, *binary=x*, *next="x"* **|** *file="filename.txt"* **|** *listfile="filename.txt"*, *prompt="text"*, *log="filename.txt"***)**

Elements:

id=xxx - Specify a C CONST identifier, may be int8, int16, int32 or char array

Use in place of id parameter, when storing serial number to EEPROM:
dataee=x - The address x is the start address in the data EEPROM.
binary=x - The integer x is the number of bytes to be written to address specified. -or-
string=x - The integer x is the number of bytes to be written to address specified.
unicode=n **-** If n is a 0, the string format is normal unicode. For n>0 n indicates the string
number in a USB descriptor.

Use only one of the next three options:
file="filename.txt" - The file x is used to read the initial serial number from, and this file is updated by the ICD programmer. It is assumed this is a one line file with the serial number. The programmer will increment the serial number.

listfile="filename.txt" - The file x is used to read the initial serial number from, and this file is updated by the ICD programmer. It is assumed this is a file one serial number per line. The programmer will read the first line then delete that line from the file.

next="x" - The serial number X is used for the first load, then the hex file is updated to increment x by one.

Other optional parameters:
prompt="text" - If specified the user will be prompted for a serial number on each load. If used with one of the above three options then the default value the user may use is picked according to the above rules.

log=xxx - A file may optionally be specified to keep a log of the date, time, hex file name and serial number each time the part is programmed. If no id=xxx is specified then this may be used as a simple log of all loads of the hex file.

Purpose: Assists in making serial numbers easier to implement when working with CCS ICD units. Comments are inserted into the hex file that the ICD software interprets.

Examples:

```
//Prompt user for serial number to be placed
//at address of serialNumA
//Default serial number = 200int8int8 const serialNumA=100;
#serialize(id=serialNumA,next="200",prompt="Enter the serial number")

//Adds serial number log in seriallog.txt
#serialize(id=serialNumA,next="200",prompt="Enter the serial number",
log="seriallog.txt")
```

```
//Retrieves serial number from serials.txt
#serialize(id=serialNumA,listfile="serials.txt")

//Place serial number at EEPROM address 0, reserving 1 byte
#serialize(dataee=0,binary=1,next="45",prompt="Put in Serial number")

//Place string serial number at EEPROM address 0, reserving 2 bytes
#serialize(dataee=0, string=2,next="AB",prompt="Put in Serial number")
```

Example Files:	None
Also See:	None

#task

(The RTOS is only included with the PCW, PCWH, and PCWHD software packages.)

Each RTOS task is specified as a function that has no parameters and no return. The #TASK directive is needed just before each RTOS task to enable the compiler to tell which functions are RTOS tasks. An RTOS task cannot be called directly like a regular function can.

Syntax:	**#TASK** *(options)*
Elements:	***options*** are separated by comma and may be: rate=time Where time is a number followed by s, ms, us, or ns. This specifies how often the task will execute. max=time Where time is a number followed by s, ms, us, or ns. This specifies the budgeted time for this task. queue=bytes Specifies how many bytes to allocate for this task's incoming messages. The default value is 0. enabled=value Specifies whether a task is enabled or disabled by rtos_run( ). True for enabled, false for disabled. The default value is enabled.
Purpose:	This directive tells the compiler that the following function is an RTOS task. The rate option is used to specify how often the task should execute. This must be a multiple of the minor_cycle option if one is specified in the #USE RTOS directive. The max option is used to specify how much processor time a task will use in one execution of the task. The time specified in max must be equal to or less than the time specified in the minor_cycle option of the #USE RTOS directive before the project will compile successfully. The compiler does not have a way to enforce this limit on processor time, so a programmer must be careful with how much processor time a task uses for execution. This option does not need to be specified. The queue option is used to specify the number of bytes to be reserved for the task to receive messages from other tasks or functions. The default queue value is 0.
Examples:	`#task(rate=1s, max=20ms, queue=5)`

Also See:	#USE RTOS

__time__

Syntax:	**__TIME__**
Elements:	None
Purpose:	This pre-processor identifier is replaced at compile time with the time of the compile in the form: "hh:mm:ss"
Examples:	`printf("Software was compiled on ");` `printf(__TIME__);`
Example Files:	None
Also See:	None

#type

Syntax:	**#TYPE** *standard-type*=*size* **#TYPE** *default=area* **#TYPE** unsigned **#TYPE** signed
Elements:	***standard-type*** is one of the C keywords short, int, long, or default ***size*** is 1,8,16, or 32 ***area*** is a memory region defined before the #TYPE using the addressmod directive
Purpose:	By default the compiler treats SHORT as one bit , INT as 8 bits, and LONG as 16 bits. The traditional C convention is to have INT defined as the most efficient size for the target processor. This is why it is 8 bits on the PIC ® . In order to help with code compatibility a #TYPE directive may be used to allow these types to be changed. #TYPE can redefine these keywords. Note that the commas are optional. Since #TYPE may render some sizes inaccessible (like a one bit int in the above) four keywords representing the four ints may always be used: INT1, INT8, INT16, and INT32. Be warned CCS example programs and include files may not work right if you use #TYPE in your program. This directive may also be used to change the default RAM area used for variable storage. This is done by specifying default=area where area is a addressmod address space. When linking multiple compilation units be aware this directive only applies to the current compilation unit. The #TYPE directive allows the keywords UNSIGNED and SIGNED to set the default data type.
Examples:	`#TYPE SHORT= 8 , INT= 16 , LONG= 32`

```
#TYPE default=area

addressmod (user_ram_block, 0x100, 0x1FF);

#type default=user_ram_block  // all variable declarations
                              // in this area will be in
                              // 0x100-0x1FF

#type default=                // restores memory allocation
                              // back to normal

#TYPE SIGNED

...
void main()
{
int variable1;  // variable1 can only take values from -128 to 127
...
...
}
```

Example Files:	ex_cust.c
Also See:	None

#undef

Syntax:	**#UNDEF** *id*
Elements:	***id*** is a pre-processor id defined via #DEFINE
Purpose:	The specified pre-processor ID will no longer have meaning to the pre-processor.

Examples:	`#if MAXSIZE<100`
	`#undef MAXSIZE`
	`#define MAXSIZE 100`
	`#endif`

Example Files:	None
Also See:	#DEFINE

_unicode

Syntax:	**__unicode(constant-string)**
Elements:	Unicode format string
Purpose	This macro will convert a standard ASCII string to a Unicode format string by inserting a \000 after each character and removing the normal C string terminator. For example: _unicode("ABCD") will return: "A\00B\000C\000D" (8 bytes total with the terminator)

Since the normal C terminator is not used for these strings you need to do one of the following for variable length strings:

```
    string = _unicode(KEYWORD)  "\000\000";
OR
    string = _unicode(KEYWORD);
    string_size = sizeof(_unicode(KEYWORD));
```

Examples:

```
  #define USB_DESC_STRING_TYPE 3

  #define USB_STRING(x)
 (sizeof(_unicode(x))+2),USB_DESC_STRING_TYPE,_unicode(x)
  #define USB_ENGLISH_STRING 4,USB_DESC_STRING_TYPE,0x09,0x04
                                                //Microsoft Defined for
English

  char const USB_STRING_DESC[]=[
     USB_ENGLISH_STRING,
     USB_STRING("CCS"),
     USB_STRING("CCS HID DEMO")
  };
```

Example Files: usb_desc_hid.h

#use capture

Syntax:	**#USE CAPTURE(options)**
Elements:	**ICx/CCPx** Which CCP/Input Capture module to us. **INPUT = PIN_xx** Specifies which pin to use. Useful for device with remappable pins, this will cause compiler to automatically assign pin to peripheral. **TIMER=x** Specifies the timer to use with capture unit. If not specified default to timer 1 for PCM and PCH compilers and timer 3 for PCD compiler. **TICK=x** The tick time to setup the timer to. If not specified it will be set to fastest as possible or if same timer was already setup by a previous stream it will be set to that tick time. If using same timer as previous stream and different tick time an error will be generated. **FASTEST** Use instead of TICK=x to set tick time to fastest as possible. **SLOWEST** Use instead of TICK=x to set tick time to slowest as possible. **CAPTURE_RISING** Specifies the edge that timer value is captured on. Defaults to CAPTURE_RISING. **CAPTURE_FALLING**

	Specifies the edge that timer value is captured on. Defaults to CAPTURE_RISING. **CAPTURE_BOTH** PCD only. Specifies the edge that timer value is captured on. Defaults to CAPTURE_RISING. **PRE=x** Specifies number of rising edges before capture event occurs. Valid options are 1, 4 and 16, default to 1 if not specified. Options 4 and 16 are only valid when using CAPTURE_RISING, will generate an error is used with CAPTURE_FALLING or CAPTURE_BOTH. **ISR=x** **STREAM=id** Associates a stream identifier with the capture module. The identifier may be used in functions like get_capture_time(). **DEFINE=id** Creates a define named id which specifies the number of capture per second. Default define name if not specified is CAPTURES_PER_SECOND. Define name must start with an ASCII letter 'A' to 'Z', an ASCII letter 'a' to 'z' or an ASCII underscore ('_').
Purpose:	This directive tells the compiler to setup an input capture on the specified pin using the specified settings. The #USE DELAY directive must appear before this directive can be used. This directive enables use of built-in functions such as get_capture_time() and get_capture_event().
Examples:	#USE CAPTURE(INPUT=PIN_C2,CAPTURE_RISING,TIMER=1,FASTEST)
Example Files:	None.
Also See:	get_capture_time(), get_capture_event()

#use delay

Syntax:	**#USE DELAY (options))**
Elements:	Options may be any of the following separated by commas: ***clock=speed*** speed is a constant 1-100000000 (1 hz to 100 mhz). This number can contains commas. This number also supports the following denominations: M, MHZ, K, KHZ. This specifies the clock the CPU runs at. Depending on the PIC this is 2 or 4 times the instruction rate. This directive is not needed if the following type=speed is used and there is no frequency multiplication or division. ***type=speed*** type defines what kind of clock you are using, and the following values are valid: oscillator, osc (same as oscillator), crystal, xtal (same as crystal), internal, int (same as internal) or rc. The compiler will automatically set the oscillator configuration bits based upon your defined type. If you specified internal, the compiler will also automatically set the internal oscillator to the defined speed. Configuration fuses are modified when this option is used. Speed is the input frequency. ***restart_wdt*** will restart the watchdog timer on every delay_us() and delay_ms() use. ***clock_out*** when used with the internal or oscillator types this enables the clockout pin to output the clock. ***fast_start*** some chips allow the chip to begin execution using an internal clock until the primary clock

	is stable. ***lock*** some chips can prevent the oscillator type from being changed at run time by the software. ***USB or USB_FULL*** for devices with a built-in USB peripheral. When used with the ***type=speed*** option the compiler will set the correct configuration bits for the USB peripheral to operate at Full-Speed. ***USB_LOW*** for devices with a built-in USB peripheral. When used with the ***type=speed*** option the compiler will set the correct configuration bits for the USB peripheral to operate at Low-Speed. **ACT or ACT=type** for device with Active Clock Tuning, type can be either USB or SOSC. If only using ACT type will default to USB. ACT=USB causes the compiler to enable the active clock tuning and to tune the internal oscillator to the USB clock. ACT=SOSC causes the compiler to enable the active clock tuning and to tune the internal oscillator to the secondary clock at 32.768 kHz. ACT can only be used when the system clock is set to run from the internal oscillator.
Also See:	delay_ms(), delay_us()

#use dynamic_memory

Syntax:	**#USE DYNAMIC_MEMORY**
Elements:	***None***
Purpose:	This pre-processor directive instructs the compiler to create the _DYNAMIC_HEAD object. _DYNAMIC_HEAD is the location where the first free space is allocated.

Examples:	`#USE DYNAMIC_MEMORY`
	`void main ( ){`
	`  }`

Example Files:	ex_malloc.c
Also See:	None

#use fast_io

Syntax:	**#USE FAST_IO (*port*)**
Elements:	***port*** is A, B, C, D, E, F, G, H, J or ALL
Purpose:	Affects how the compiler will generate code for input and output instructions that follow. This directive takes effect until another #use xxxx_IO directive is encountered. The fast method of doing I/O will cause the compiler to perform I/O without programming of the direction register. The compiler's default operation is the opposite of this command, the direction I/O will be set/cleared on each I/O operation. The user must ensure the direction register is set correctly via set_tris_X(). When linking multiple compilation units be aware this directive only applies to the current compilation unit.
Examples:	`#use fast_io(A)`

Example Files:	ex_cust.c
Also See:	#USE FIXED_IO, #USE STANDARD_IO, set_tris_X() , General Purpose I/O

#use fixed_io

Syntax:	**#USE FIXED_IO (***port_outputs***=***pin***,** *pin***?)**
Elements:	***port*** is A-G, ***pin*** is one of the pin constants defined in the devices .h file.
Purpose:	This directive affects how the compiler will generate code for input and output instructions that follow. This directive takes effect until another #USE XXX_IO directive is encountered. The fixed method of doing I/O will cause the compiler to generate code to make an I/O pin either input or output every time it is used. The pins are programmed according to the information in this directive (not the operations actually performed). This saves a byte of RAM used in standard I/O. When linking multiple compilation units be aware this directive only applies to the current compilation unit.
Examples:	`#use fixed_io(a_outputs=PIN_A2, PIN_A3)`
Example Files:	None
Also See:	#USE FAST_IO, #USE STANDARD_IO, General Purpose I/O

#use i2c

Syntax:	**#USE I2C (***options***)**
Elements:	***Options*** are separated by commas and may be:

MASTER	Sets to the master mode
MULTI_MASTER	Set the multi_master mode
SLAVE	Set the slave mode
SCL=pin	Specifies the SCL pin (pin is a bit address)
SDA=pin	Specifies the SDA pin
ADDRESS=nn	Specifies the slave mode address
FAST	Use the fast I2C specification.
FAST=nnnnnn	Sets the speed to nnnnnn hz
SLOW	Use the slow I2C specification
RESTART_WDT	Restart the WDT while waiting in I2C_READ
FORCE_HW	Use hardware I2C functions.
FORCE_SW	Use software I2C functions.
NOFLOAT_HIGH	Does not allow signals to float high, signals are driven from low to high
SMBUS	Bus used is not I2C bus, but very similar

STREAM=id	Associates a stream identifier with this I2C port. The identifier may then be used in functions like i2c_read or i2c_write.
NO_STRETCH	Do not allow clock streaching
MASK=nn	Set an address mask for parts that support it
I2C1	Instead of SCL= and SDA= this sets the pins to the first module
I2C2	Instead of SCL= and SDA= this sets the pins to the second module
NOINIT	No initialization of the I2C peripheral is performed. Use I2C_INIT() to initialize peripheral at run time.

Only some chips allow the following:

DATA_HOLD	No ACK is sent until I2C_READ is called for data bytes (slave only)
ADDRESS_HOLD	No ACK is sent until I2C_read is called for the address byte (slave only)
SDA_HOLD	Min of 300ns holdtime on SDA a from SCL goes low

Purpose: CCS offers support for the hardware-based I2C™ and a software-based master I2C™ device.(For more information on the hardware-based I2C module, please consult the datasheet for your target device; not all PICs support I2C™.

The I2C library contains functions to implement an I2C bus. The #USE I2C remains in effect for the I2C_START, I2C_STOP, I2C_READ, I2C_WRITE and I2C_POLL functions until another USE I2C is encountered. Software functions are generated unless the FORCE_HW is specified. The SLAVE mode should only be used with the built-in SSP. The functions created with this directive are exported when using multiple compilation units. To access the correct function use the stream identifier.

Examples:

```
#use I2C(master, sda=PIN_B0, scl=PIN_B1)

#use I2C(slave,sda=PIN_C4,scl=PIN_C3
                address=0xa0,FORCE_HW)

#use I2C(master, scl=PIN B0, sda=PIN B1, fast=450000)
//sets the target speed to 450 KBSP
```

Example Files: ex_extee.c with 16c74.h

Also See: i2c_poll, i2c_speed, i2c_start, i2c_stop, i2c_slaveaddr, i2c_isr_state, i2c_write, i2c_read, I2C Overview

#use profile()

Syntax: **#use profile(options)**

Elements: ***options*** may be any of the following, comma separated:

ICD	**Default – configures code profiler to use the ICD connection.**
TIMER1	Optional. If specified, the code profiler run-time on the microcontroller will use the Timer1 peripheral as a timestamp for all profile events. If not specified the code profiler tool will use the PC clock, which may not be accurate for fast events.

	BAUD=x	Optional. If specified, will use a different baud rate between the microcontroller and the code profiler tool. This may be required on slow microcontrollers to attempt to use a slower baud rate.
Purpose:	Tell the compiler to add the code profiler run-time in the microcontroller and configure the link and clock.	
Examples:	#profile(ICD, TIMER1, baud=9600)	
Example Files:	ex_profile.c	
Also See:	#profile(), profileout(), Code Profile overview	

#use pwm

Syntax:	**#USE PWM(options)**

Elements: ***Options*** are separated by commas and may be:

PWMx or CCPx	**Selects the CCP to use, x being the module number to use.**
OUTPUT=PIN_xx	Selects the PWM pin to use, pin must be one of the CCP pins. If device has remappable pins compiler will assign specified pin to specified CCP module. If CCP module not specified it will assign remappable pin to first available module.
TIMER=x	Selects timer to use with PWM module, default if not specified is timer 2.
FREQUENCY=x	Sets the period of PWM based off specified value, should not be used if PERIOD is already specified. If frequency can't be achieved exactly compiler will generate a message specifying the exact frequency and period of PWM. If neither FREQUENCY or PERIOD is specified, the period defaults to maximum possible period with maximum resolution and compiler will generate a message specifying the frequency and period of PWM, or if using same timer as previous stream instead of setting to maximum possible it will be set to the same as previous stream. If using same timer as previous stream and frequency is different compiler will generate an error.
PERIOD=x	Sets the period of PWM, should not be used if FREQUENCY is already specified. If period can't be achieved exactly compiler will generate a message specifying the exact period and frequency of PWM. If neither PERIOD or FREQUENCY is specified, the period defaults to maximum possible period with maximum resolution and compiler will generate a message specifying the frequency and period of PWM, or if using same timer as previous stream instead of setting to maximum possible it will be set to the same as previous stream. If using same timer as previous stream and period is different compiler will generate an error.
BITS=x	Sets the resolution of the the duty cycle, if period or frequency is specified will adjust the period to meet set resolution and will generate an message specifying the frequency and duty of PWM. If period or frequency not specified will set period to maximum possible for specified resolution and compiler will generate a message specifying the frequency and period of PWM, unless using same timer as previous then it will generate an error if resolution is different then previous stream. If not

	specified then frequency, period or previous stream using same timer sets the resolution.
DUTY=x	Selects the duty percentage of PWM, default if not specified is 50%.
PWM_ON	Initialize the PWM in the ON state, default state if pwm_on or pwm_off is not specified.
PWM_OFF	Initalize the PWM in the OFF state.
STREAM=id	Associates a stream identifier with the PWM signal. The identifier may be used in functions like pwm_set_duty_percent().

Purpose:	This directive tells the compiler to setup a PWM on the specified pin using the specified frequency, period, duty cycle and resolution. The #USE DELAY directive must appear before this directive can be used. This directive enables use of built-in functions such as set_pwm_duty_percent(), set_pwm_frequency(), set_pwm_period(), pwm_on() and pwm_off().
Example Files	None
Also See:	

#use rs232

Syntax: **#USE RS232 (***options***)**

Elements: ***Options*** are separated by commas and may be:

STREAM=id	**Associates a stream identifier with this RS232 port. The identifier may then be used in functions like fputc.**
BAUD=x	Set baud rate to x
XMIT=pin	Set transmit pin
RCV=pin	Set receive pin
FORCE_SW	Will generate software serial I/O routines even when the UART pins are specified.
BRGH1OK	Allow bad baud rates on chips that have baud rate problems.
ENABLE=pin	The specified pin will be high during transmit. This may be used to enable 485 transmit.
DEBUGGER	Indicates this stream is used to send/receive data through a CCS ICD unit. The default pin used is B3, use XMIT= and RCV= to change the pin used. Both should be the same pin.
RESTART_WDT	Will cause GETC() to clear the WDT as it waits for a character.
INVERT	Invert the polarity of the serial pins (normally not needed when level converter, such as the MAX232). May not be used with the internal UART.

PARITY=X	Where x is N, E, or O.
BITS =X	Where x is 5-9 (5-7 may not be used with the SCI).
FLOAT_HIGH	The line is not driven high. This is used for open collector outputs. Bit 6 in RS232_ERRORS is set if the pin is not high at the end of the bit time.
ERRORS	Used to cause the compiler to keep receive errors in the variable RS232_ERRORS and to reset errors when they occur.
SAMPLE_EARLY	A getc() normally samples data in the middle of a bit time. This option causes the sample to be at the start of a bit time. May not be used with the UART.
RETURN=pin	For FLOAT_HIGH and MULTI_MASTER this is the pin used to read the signal back. The default for FLOAT_HIGH is the XMIT pin and for MULTI_MASTER the RCV pin.
MULTI_MASTER	Uses the RETURN pin to determine if another master on the bus is transmitting at the same time. If a collision is detected bit 6 is set in RS232_ERRORS and all future PUTC's are ignored until bit 6 is cleared. The signal is checked at the start and end of a bit time. May not be used with the UART.
LONG_DATA	Makes getc() return an int16 and putc accept an int16. This is for 9 bit data formats.
DISABLE_INTS	Will cause interrupts to be disabled when the routines get or put a character. This prevents character distortion for software implemented I/O and prevents interaction between I/O in interrupt handlers and the main program when using the UART.
STOP=X	To set the number of stop bits (default is 1). This works for both UART and non-UART ports.
TIMEOUT=X	To set the time getc() waits for a byte in milliseconds. If no character comes in within this time the RS232_ERRORS is set to 0 as well as the return value form getc(). This works for both UART and non-UART ports.
SYNC_SLAVE	Makes the RS232 line a synchronous slave, making the receive pin a clock in, and the data pin the data in/out.
SYNC_MASTER	Makes the RS232 line a synchronous master, making the receive pin a clock out, and the data pin the data in/out.
SYNC_MATER_CONT	Makes the RS232 line a synchronous master mode in continuous receive mode. The receive pin is set as a clock out, and the data pin is set as the data in/out.
UART1	Sets the XMIT= and RCV= to the chips first hardware UART.
UART2	Sets the XMIT= and RCV= to the chips second hardware UART.
NOINIT	No initialization of the UART peripheral is performed.

	Useful for dynamic control of the UART baudrate or initializing the peripheral manually at a later point in the program's run time. If this option is used, then setup_uart( ) needs to be used to initialize the peripheral. Using a serial routine (such as getc( ) or putc( )) before the UART is initialized will cause undefined behavior.
ICD	Indicates this stream is used to send/receive data through a CCS ICD unit. The default trasmit pin is the PIC's ICSPDAT/PGD pin and the default receive pin is the PIC's ICSPCLK/PGC pin. Use XMIT= and RCV= to change the pins used.
UART3	Sets the XMIT= and RCV= to the device's third hardware UART.
UART4	Sets the XMIT= and RCV= to the device's fourth hardware UART.
ICD	Indicates this stream uses the ICD in a special pass through mode to send/receive serial data to/from PC. The ICSP clock line is the PIC's receive pin, usually pin B6, and the ICSP data line is the PIC's transmit pin, usually pin B7.
Serial Buffer Options:	
RECEIVE_BUFFER=x	Size in bytes of UART circular receive buffer, default if not specified is zero. Uses an interrupt to receive data, supports RDA interrupt or external interrupts.
TRANSMIT_BUFFER=x	Size in bytes of UART circular transmit buffer, default if not specified is zero.
TXISR	If TRANSMIT_BUFFER is greater then zero specifies using TBE interrupt for transmitting data. Default is NOTXISR if TXISR or NOTXISR is not specified. TXISR option can only be used when using hardware UART.
NOTXISR	If TRANSMIT_BUFFER is greater then zero specifies to not use TBE interrupt for transmitting data. Default is NOTXISR if TXISR or NOTXISR is not specified and XMIT_BUFFER is greater then zero
Flow Control Options:	
RTS = PIN_xx	Pin to use for RTS flow control. When using FLOW_CONTROL_MODE this pin is driven to the active level when it is ready to receive more data. In SIMPLEX_MODE the pin is driven to the active level when it has data to transmit. FLOW_CONTROL_MODE can only be use when using RECEIVE_BUFFER
RTS_LEVEL=x	Specifies the active level of the RTS pin, HIGH is active high and LOW is active low. Defaults to LOW if not specified.
CTS = PIN_xx	Pin to use for CTS flow control. In both FLOW_CONTROL_MODE and SIMPLEX_MODE this pin is sampled to see if it clear to send data. If pin is at active level and there is data to send it will send next data byte.
CTS_LEVEL=x	Specifies the active level of the CTS pin, HIGH is active high and LOW is active low. Default to LOW if not specified
FLOW_CONTROL_MODE	Specifies how the RTS pin is used. For FLOW_CONTROL_MODE the RTS pin is driven to the active level when ready to receive data. Defaults to FLOW_CONTROL_MODE when neither FLOW_CONTROL_MODE or SIMPLEX_MODE is specified. If RTS pin isn't specified then this option is not used.
SIMPLEX_MODE	Specifies how the RTS pin is used. For SIMPLEX_MODE the RTS pin is driven to the active level when it has data to send. Defaults to FLOW_CONTROL_MODE when neither FLOW_CONTROL_MODE or SIMPLEX_MODE is

	specified. If RTS pin isn't specified then this option is not used.

Purpose: This directive tells the compiler the baud rate and pins used for serial I/O. This directive takes effect until another RS232 directive is encountered. The #USE DELAY directive must appear before this directive can be used. This directive enables use of built-in functions such as GETC, PUTC, and PRINTF. The functions created with this directive are exported when using multiple compilation units. To access the correct function use the stream identifier.

When using parts with built-in SCI and the SCI pins are specified, the SCI will be used. If a baud rate cannot be achieved within 3% of the desired value using the current clock rate, an error will be generated. The definition of the RS232_ERRORS is as follows:

No UART:
- Bit 7 is 9th bit for 9 bit data mode (get and put).
- Bit 6 set to one indicates a put failed in float high mode.

With a UART:
- Used only by get:
- Copy of RCSTA register except:
- Bit 0 is used to indicate a parity error.

Warning:
The PIC UART will shut down on overflow (3 characters received by the hardware with a GETC() call). The "ERRORS" option prevents the shutdown by detecting the condition and resetting the UART.

Examples:

```
#use rs232(baud=9600, xmit=PIN A2,rcv=PIN A3)
```

Example Files: ex_cust.c

Also See: getc(), putc(), printf(), setup_uart( ), RS2332 I/O overview

#use rtos

(The RTOS is only included with the PCW and PCWH packages.)

The CCS Real Time Operating System (RTOS) allows a PIC micro controller to run regularly scheduled tasks without the need for interrupts. This is accomplished by a function (RTOS_RUN()) that acts as a dispatcher. When a task is scheduled to run, the dispatch function gives control of the processor to that task. When the task is done executing or does not need the processor anymore, control of the processor is returned to the dispatch function which then will give control of the processor to the next task that is scheduled to execute at the appropriate time. This process is called cooperative multi-tasking.

Syntax: **#USE RTOS** (options)

Elements: options are separated by comma and may be:

timer=X	Where x is 0-4 specifying the timer used by the RTOS.
minor_cycle=time	Where time is a number followed by s, ms, us, ns. This is the longest time any task will run. Each task's execution rate must be a multiple of this time. The compiler can calculate this if it is not specified.
statistics	Maintain min, max, and total time used by each task.

Purpose: This directive tells the compiler which timer on the PIC to use for monitoring and when to grant control to a task. Changes to the specified timer's prescaler will effect the rate at which tasks are executed.

This directive can also be used to specify the longest time that a task will ever take to execute with the minor_cycle option. This simply forces all task execution rates to be a multiple of the minor_cycle before the project will compile successfully. If the this option is not specified the compiler will use a minor_cycle value that is the smallest possible factor of the execution rates of the RTOS tasks.

If the statistics option is specified then the compiler will keep track of the minimum processor time taken by one execution of each task, the maximum processor time taken by one execution of each task, and the total processor time used by each task.

When linking multiple compilation units, this directive must appear exactly the same in each compilation unit.

Examples:

```
#use rtos(timer=0, minor_cycle=20ms)
```

Also See: #TASK

#use spi

Syntax: **#USE SPI (*options*)**

Elements: ***Options*** are separated by commas and may be:

MASTER	**Set the device as the master. (default)**
SLAVE	Set the device as the slave.
BAUD=n	Target bits per second, default is as fast as possible.
CLOCK_HIGH=n	High time of clock in us (not needed if BAUD= is used). (default=0)
CLOCK_LOW=n	Low time of clock in us (not needed if BAUD= is used). (default=0)
DI=pin	Optional pin for incoming data.
DO=pin	Optional pin for outgoing data.
CLK=pin	Clock pin.
MODE=n	The mode to put the SPI bus.
ENABLE=pin	Optional pin to be active during data transfer.
LOAD=pin	Optional pin to be pulsed active after data is transferred.
DIAGNOSTIC=pin	Optional pin to the set high when data is sampled.
SAMPLE_RISE	Sample on rising edge.
SAMPLE_FALL	Sample on falling edge (default).
BITS=n	Max number of bits in a transfer. (default=32)
SAMPLE_COUNT=n	Number of samples to take (uses majority vote). (default=1
LOAD_ACTIVE=n	Active state for LOAD pin (0, 1).
ENABLE_ACTIVE=n	Active state for ENABLE pin (0, 1). (default=0)
IDLE=n	Inactive state for CLK pin (0, 1). (default=0)
ENABLE_DELAY=n	Time in us to delay after ENABLE is activated. (default=0)
DATA_HOLD=n	Time between data change and clock change
LSB_FIRST	LSB is sent first.
MSB_FIRST	MSB is sent first. (default)
STREAM=id	Specify a stream name for this protocol.
SPI1	Use the hardware pins for SPI Port 1
SPI2	Use the hardware pins for SPI Port 2
FORCE_HW	Use the pic hardware SPI.
NOINIT	Don't initialize the hardware SPI Port

Purpose: The SPI library contains functions to implement an SPI bus. After setting all of the proper

	parameters in #USE SPI, the spi_xfer() function can be used to both transfer and receive data on the SPI bus. The SPI1 and SPI2 options will use the SPI hardware onboard the PIC. The most common pins present on hardware SPI are: DI, DO, and CLK. These pins don't need to be assigned values through the options; the compiler will automatically assign hardware-specific values to these pins. Consult your PIC's data sheet as to where the pins for hardware SPI are. If hardware SPI is not used, then software SPI will be used. Software SPI is much slower than hardware SPI, but software SPI can use any pins to transfer and receive data other than just the pins tied to the PIC's hardware SPI pins. The MODE option is more or less a quick way to specify how the stream is going to sample data. MODE=0 sets IDLE=0 and SAMPLE_RISE. MODE=1 sets IDLE=0 and SAMPLE_FALL. MODE=2 sets IDLE=1 and SAMPLE_FALL. MODE=3 sets IDLE=1 and SAMPLE_RISE. There are only these 4 MODEs. SPI cannot use the same pins for DI and DO. If needed, specify two streams: one to send data and another to receive data. The pins must be specified with DI, DO, CLK or SPIx, all other options are defaulted as indicated above.

Examples:	`#use spi(DI=PIN_B1, DO=PIN_B0, CLK=PIN_B2, ENABLE=PIN_B4, BITS=16)`
	`// uses software SPI`
	
	`#use spi(FORCE_HW, BITS=16, stream=SPI_STREAM)`
	`// uses hardware SPI and gives this stream the name SPI_STREAM`

Example Files:	None
Also See:	spi_xfer()

#use standard_io

Syntax:	**#USE STANDARD_IO (*port*)**
Elements:	***port*** is A, B, C, D, E, F, G, H, J or ALL
Purpose:	This directive affects how the compiler will generate code for input and output instructions that follow. This directive takes effect until another #USE XXX_IO directive is encountered. The standard method of doing I/O will cause the compiler to generate code to make an I/O pin either input or output every time it is used. On the 5X processors this requires one byte of RAM for every port set to standard I/O. Standard_io is the default I/O method for all ports. When linking multiple compilation units be aware this directive only applies to the current compilation unit.
Examples:	`#use standard_io(A)`
Example Files:	ex_cust.c
Also See:	#USE FAST_IO, #USE FIXED_IO, General Purpose I/O

#use timer

Syntax: **#USE TIMER (options)**

Elements:

TIMER=x
Sets the timer to use as the tick timer. x is a valid timer that the PIC has. Default value is 1 for Timer 1.

TICK=xx
Sets the desired time for 1 tick. xx can be used with ns(nanoseconds), us (microseconds), ms (milliseconds), or s (seconds). If the desired tick time can't be achieved it will set the time to closest achievable time and will generate a warning specifying the exact tick time. The default value is 1us.

BITS=x
Sets the variable size used by the get_ticks() and set_ticks() functions for returning and setting the tick time. x can be 8 for 8 bits, 16 for 16 bits or 32 for 32bits. The default is 32 for 32 bits.

ISR
Uses the timer's interrupt to increment the upper bits of the tick timer. This mode requires the the global interrupt be enabled in the main program.

NOISR
The get_ticks() function increments the upper bits of the tick timer. This requires that the get_ticks() function be called more often then the timer's overflow rate. NOISR is the default mode of operation.

STREAM=id
Associates a stream identifier with the tick timer. The identifier may be used in functions like get_ticks().

DEFINE=id
Creates a define named id which specifies the number of ticks that will occur in one second. Default define name if not specified is TICKS_PER_SECOND. Define name must start with an ASCII letter 'A' to 'Z', an ASCII letter 'a' to 'z' or an ASCII underscore ('_').

COUNTER or COUNTER=x
Sets up specified timer as a counter instead of timer. x specifies the prescallar to setup counter with, default is1 if x is not specified specified. The function get_ticks() will return the current count and the function set_ticks() can be used to set count to a specific starting value or to clear counter.

Purpose: This directive creates a tick timer using one of the PIC's timers. The tick timer is initialized to zero at program start. This directive also creates the define TICKS_PER_SECOND as a floating point number, which specifies that number of ticks that will occur in one second.

Examples:

```
#USE TIMER(TIMER=1,TICK=1ms,BITS=16,NOISR)

unsigned int16 tick_difference(unsigned int16 current, unsigned int16 previous) {
   return(current - previous);
}

void main(void) {
   unsigned int16 current_tick, previous_tick;
   current_tick = previous_tick = get_ticks();
   while(TRUE) {
      current_tick = get_ticks();
      if(tick_difference(current_tick, previous_tick) > 1000) {
         output_toggle(PIN_B0);
         previous_tick = current_tick;
      }
   }
}
```

Example Files:	None
Also See:	get_ticks(), set_ticks()

#use touchpad

Syntax:	**#USE TOUCHPAD (options)**
Elements:	***RANGE=x*** Sets the oscillator charge/discharge current range. If x is L, current is nominally 0.1 microamps. If x is M, current is nominally 1.2 microamps. If x is H, current is nominally 18 microamps. Default value is H (18 microamps). ***THRESHOLD=x*** x is a number between 1-100 and represents the percent reduction in the nominal frequency that will generate a valid key press in software. Default value is 6%. ***SCANTIME=xxMS*** xx is the number of milliseconds used by the microprocessor to scan for one key press. If utilizing multiple touch pads, each pad will use xx milliseconds to scan for one key press. Default is 32ms. ***PIN=char*** If a valid key press is determined on “PIN”, the software will return the character “char” in the function touchpad_getc(). (Example: PIN_B0='A') **SOURCETIME=xxus** (CTMU only) xx is thenumber of microseconds each pin is sampled for by ADC during each scan time period. Default is 10us.
Purpose:	This directive will tell the compiler to initialize and activate the Capacitive Sensing Module (CSM)or Charge Time Measurement Unit (CTMU) on the microcontroller. The compiler requires use of the TIMER0 and TIMER1 modules for CSM and Timer1 ADC modules for CTMU, and global interrupts must still be activated in the main program in order for the CSM or CTMU to begin normal operation. For most applications, a higher RANGE, lower THRESHOLD, and higher SCANTIME will result better key press detection. Multiple PIN's may be declared in “options”, but they must be valid pins used by the CSM or CTMU. The user may also generate a TIMER0 ISR with TIMER0's interrupt occuring every SCANTIME milliseconds. In this case, the CSM's or CTMU's ISR will be executed first.

Examples:	`#USE TOUCHPAD (THRESHOLD=5, PIN_D5='5', PIN_B0='C')`
	`void main(void){`
	`  char c;`
	`  enable interrupts(GLOBAL);`
	
	`  while(1){`
	`  c = TOUCHPAD_GETC();  //will wait until a pin is detected`
	`  }  //if PIN B0 is pressed, c will have 'C'`
	`}  //if PIN_D5 is pressed, c will have '5'`

Example Files:	None
Also See:	touchpad_state( ), touchpad_getc( ), touchpad_hit( )

#warning

Syntax:	**#WARNING** *text*
Elements:	***text*** is optional and may be any text
Purpose:	Forces the compiler to generate a warning at the location this directive appears in the file. The text may include macros that will be expanded for the display. This may be used to see the macro expansion. The command may also be used to alert the user to an invalid compile time situation. To prevent the warning from being counted as a warning, use this syntax: #warning/information text

Examples:	`#if  BUFFER_SIZE < 32`
	`#warning  Buffer Overflow may occur`
	`#endif`

Example Files:	ex_psp.c
Also See:	#ERROR

#word

Syntax:	**#WORD** *id* **=** *x*
Elements:	***id*** is a valid C identifier, ***x*** is a C variable or a constant
Purpose:	If the id is already known as a C variable then this will locate the variable at address x. In this case the variable type does not change from the original definition. If the id is not known a new C variable is created and placed at address x with the type int16 Warning: In both cases memory at x is not exclusive to this variable. Other variables may be located at the same location. In fact when x is a variable, then id and x share the same memory location.

Examples:	`#word data = 0x0800`
	
	`struct  {`
	`  int lowerByte : 8;`
	`  int upperByte : 8;`
	`} control_word;`
	`#word control_word = 0x85`
	`...`
	`control word.upperByte = 0x42;`

Example Files:	None
Also See:	#bit, #byte, #locate, #reserve, Named Registers, Type Specifiers, Type Qualifiers, Enumerated Types, Structures & Unions, Typedef

#zero_ram

Syntax:	**#ZERO_RAM**
Elements:	None
Purpose:	This directive zero's out all of the internal registers that may be used to hold variables before program execution begins.

Examples:	`#zero_ram`
	`void main() {`
	
	`}`

Example Files:	ex_cust.c
Also See:	None

BUILT-IN FUNCTIONS

BUILT-IN FUNCTIONS

The CCS compiler provides a lot of built-in functions to access and use the PIC microcontroller's peripherals. This makes it very easy for the users to configure and use the peripherals without going into in depth details of the registers associated with the functionality. The functions categorized by the peripherals associated with them are listed on the next page. Click on the function name to get a complete description and parameter and return value descriptions.

abs( ) 129
sin( ) cos( ) tan( ) asin( ) acos() atan() sinh() cosh() tanh() atan2() 129
adc_done( ) 130
assert( ) 131
atoe 131
atof( ) 132
pin_select() 132
atoi( ) atol( ) atoi32( ) 133
at_clear_interrupts( ) 134
at_disable_interrupts( ) 134
at_enable_interrupts( ) 135
at_get_capture( ) 136
at_get_missing_pulse_delay( ) 136
at_get_period( ) 137
at_get_phase_counter( ) 137
at_get_resolution( ) 138
at_get_set_point( ) 138
at_get_set_point_error( ) 139
at_get_status( ) 139
at_interrupt_active( ) 140
at_set_compare_time( ) 141
at_set_missing_pulse_delay( ) 141
at_set_resolution( ) 142
at_set_set_point( ) 142
at_setup_cc( ) 143
bit_clear( ) 143
bit_set( ) 144
bit_test( ) 144
brownout_enable( ) 145
bsearch( ) 145
calloc( ) 146
ceil( ) 146
clc1_setup_gate() clc2_setup_gate() clc3_setup_gate() clc4_setup_gate() 147
clc1_setup_input() clc2_setup_input() clc3_setup_input() clc4_setup_input() 148
clear_interrupt( ) 148
cog_status( ) 149
cog_restart( ) 149
crc_calc( ) 150
crc_calc8( ) 150
crc_calc16( ) 150
) 150
crc_init(mode) 151
cwg_status( ) 151
cwg_restart( ) 151
dac_write( ) 152

delay_cycles( ) 152
delay_ms( ) 153
delay_us( ) 153
disable_interrupts( ) 154
div( ) ldiv( ) 155
enable_interrupts( ) 155
erase_eeprom( ) 156
erase_program_eeprom( ) 156
exp( ) 157
ext_int_edge( ) 158
fabs( ) 158
getc( ) getch( ) getchar( ) fgetc( ) 159
gets( ) fgets( ) 159
floor( ) 160
fmod( ) 160
printf( ) fprintf( ) 161
putc( ) putchar( ) fputc( ) 162
puts( ) fputs( ) 163
free( ) 163
frexp( ) 164
scanf( ) 164
get_capture( ) 166
get_capture_event() 167
get_capture_time() 167
get_capture32() 168
get_hspwm_capture( ) 168
get_nco_accumulator( ) 169
get_nco_inc_value( ) 169
get_ticks( ) 170
get_timerA( ) 170
get_timerB( ) 170
get_timerx( ) 171
get_tris_x( ) 172
getenv( ) 172
gets( ) fgets( ) 176
goto_address( ) 176
high_speed_adc_done( ) 177
i2c_init( ) 177
i2c_isr_state( ) 178
i2c_poll( ) 179
i2c_read( ) 179
i2c_slaveaddr( ) 180
i2c_speed( ) 180
i2c_start( ) 181
i2c_stop( ) 181
i2c_write( ) 182
input( ) 183
input_change_x( ) 183
input_state( ) 184
input_x( ) 185
interrupt_active( ) 185
isalnum(char) isalpha(char) 186
iscntrl(x) isdigit(char) 186
isgraph(x) islower(char) isspace(char) isupper(char) isxdigit(char) isprint(x) ispunct(x) 186
isamong( ) 187
itoa( ) 187
jump_to_isr( ) 188
kbhit( ) 188
label_address( ) 189
labs( ) 189
lcd_contrast( ) 190
lcd_load( ) 190

lcd_symbol( ) 191
ldexp( ) 191
log( ) 192
log10( ) 192
longjmp( ) 193
make8( ) 193
make16( ) 194
make32( ) 194
malloc( ) 195
memcpy( ) memmove( ) 195
memset( ) 196
modf( ) 196
_mul( ) 197
nargs( ) 197
offsetof( ) offsetofbit( ) 198
output_x( ) 199
output_bit( ) 199
output_drive( ) 200
output_float( ) 201
output_high( ) 201
output_low( ) 202
output_toggle( ) 202
perror( ) 203
pid_busy( ) 203
pid_get_result( ) 204
pid_read( ) 204
pid_write( ) 205
port_x_pullups ( ) 206
pow( ) pwr( ) 207
printf( ) fprintf( ) 207
profileout() 208
psp_output_full( ) psp_input_full( ) psp_overflow( ) 209
putc( ) putchar( ) fputc( ) 210
putc_send( );....211
fputc_send( );....211
puts( ) fputs( ) 211
pwm_off()....212
pwm_on()....212
pwm_set_duty() 213
pwm_set_duty_percent 213
pwm_set_frequency 214
qei_get_count( ) 215
qei_set_count( ) 215
qei_status( ) 215
qsort( ) 216
rand( ) 217
rcv_buffer_bytes( ) 217
rcv_buffer_full( ) 218
read_adc( ) 218
read_bank( ) 219
read_calibration( ) 219
read_configuration_memory( ) 220
read_eeprom( ) 220
read_extended_ram( ) 221
read_program_memory( ) 221
read_external_memory( ) 221
read_high_speed_adc( ) 222
read_program_eeprom( ) 223
read_rom_memory( ) 224
read_sd_adc( ) 224
realloc( ) 224
release_io()....225

reset_cpu( ) 225
restart_cause( ) 226
restart_wdt( ) 226
rotate_left( ) 227
rotate_right( ) 228
rtc_alarm_read( ) 228
rtc_alarm_write( ) 229
rtc_read( ) 229
rtc_write( ) 230
rtos_await( ) 230
rtos_disable( ) 231
rtos_enable( ) 231
rtos_msg_poll( ) 231
rtos_msg_read( ) 232
rtos_msg_send( ) 232
rtos_overrun( ) 233
rtos_run( ) 233
rtos_signal( ) 234
rtos_stats( ) 234
rtos_terminate( ) 235
rtos_wait( ) 235
rtos_yield( ) 236
set_adc_channel( ) 236
set_analog_pins( ) 237
scanf( ) 237
set_cog_blanking( ) 239
set_cog_dead_band( ) 240
set_cog_phase( ) 240
set_compare_time( ) 241
set_hspwm_duty( ) 241
set_hspwm_event( ) 242
set_hspwm_override( ) 243
set_hspwm_phase( ) 243
set_nco_inc_value( ) 244
set_power_pwm_override( ) 245
set_power_pwmx_duty( ) 245
set_pullup( ) 246
set_pwm1_duty( ) set_pwm2_duty( ) set_pwm3_duty( ) set_pwm4_duty( ) set_pwm5_duty( ) 246
set_rtcc( ) set_timer0( ) set_timer1( ) set_timer2( ) set_timer3( ) set_timer4( ) set_timer5( ) 247
set_ticks( ) 248
setup_sd_adc_calibration( ) 248
set_sd_adc_channel( ) 249
set_timerA( ) 249
set_timerB( ) 250
set_timerx( ) 250
set_rtcc( ) set_timer0( ) set_timer1( ) set_timer2( ) set_timer3( ) set_timer4( ) set_timer5( ) 251
set_tris_x( ) 251
set_uart_speed( ) 252
setjmp( ) 253
setup_adc(mode) 253
setup_adc_ports( ) 254
setup_adc_reference( ) 254
setup_at( ) 255
setup_ccp1( ) setup_ccp2( ) setup_ccp3( ) setup_ccp4( ) setup_ccp5( ) setup_ccp6( ) 255
setup_clc1() setup_clc2() setup_clc3() setup_clc4() 257
setup_comparator( ) 257
setup_counters( ) 258
setup_cog( ) 259
setup_crc( ) 259
setup_cwg( ) 260
setup_dac( ) 261
setup_external_memory( ) 261

setup_high_speed_adc( ) 262
setup_high_speed_adc_pair( ) 262
setup_hspwm_blanking( ) 263
setup_hspwm_chop_clock( ) 264
setup_hspwm_trigger( ) 264
setup_hspwm_unit( ) 265
setup_hspwm( ) 266
setup_hspwm_unit_chop_clock( ) 266
setup_lcd( ) 267
setup_low_volt_detect( ) 268
setup_nco( ) 268
setup_opamp1( ) setup_opamp2( ) 269
setup_opamp1( ) setup_opamp2( ) 269
setup_oscillator( ) 270
setup_pid( ) 270
setup_pmp(option,address_mask) 271
setup_power_pwm( ) 272
setup_power_pwm_pins( ) 273
setup_psp(option,address_mask) 273
setup_pwm1( ) setup_pwm2( ) setup_pwm3( ) setup_pwm4( ) 274
setup_qei( ) 275
setup_rtc( ) 275
setup_rtc_alarm( ) 276
setup_sd_adc( ) 276
setup_smtx( ) 277
setup_spi( ) setup_spi2( ) 278
setup_timer_A( ) 278
setup_timer_B( ) 279
setup_timer_0( ) 279
setup_timer_1( ) 280
setup_timer_2( ) 280
setup_timer_3( ) 281
setup_timer_4( ) 281
setup_timer_5( ) 282
setup_uart( ) 282
setup_vref( ) 283
setup_wdt( ) 283
setup_zdc( ) 284
shift_left( ) 284
shift_right( ) 285
sleep( ) 285
sleep_ulpwu( ) 286
smtx_read( ) 287
smtx_reset_timer( ) 288
smtx_start( ) 288
smtx_status( ) 288
smtx_stop( ) 289
smtx_write( ) 289
smtx_update( ) 290
spi_data_is_in( ) spi_data_is_in2( ) 290
spi_init() 291
spi_prewrite(data); 291
spi_read( ) spi_read2( ) 292
spi_read_16() 292
spi_read2_16() 292
spi_read3_16() 292
spi_read4_16() 292
spi_speed 293
spi_write( ) spi_write2( ) 293
spi_xfer( ) 294
SPII_XFER_IN() 295
sprintf( ) 295

sqrt( ) 296
srand( ) 296
STANDARD STRING FUNCTIONS( ) memchr( ) memcmp( ) strcat( ) strchr( ) strcmp( ) strcoll( )
strcspn( ) strerror( ) stricmp( ) strlen( ) strlwr( ) strncat( ) strncmp( ) strncpy( ) strpbrk( ) strrchr( )
strspn( ) strstr( ) strxfrm( ) 297
strcpy( ) strcopy( ) 298
strtod( ) 298
strtok( ) 299
strtol( ) 300
strtoul( ) 300
swap( ) 301
tolower( ) toupper( ) 301
touchpad_getc( ) 302
touchpad_hit( ) 303
touchpad_state( ) 303
tx_buffer_available() 304
tx_buffer_bytes() 304
tx_buffer_full( ) 305
va_arg( ) 306
va_end( ) 306
va_start 307
write_bank( ) 307
write_configuration_memory( ) 308
write_eeprom( ) 308
write_external_memory( ) 309
write_extended_ram( ) 310
write_program_eeprom( ) 310
write_program_memory( ) 310
zdc_status( ) 312

abs( )

Syntax:	**value = abs(*x*)**
Parameters:	***x*** is a signed 8, 16, or 32 bit int or a float
Returns:	Same type as the parameter.
Function:	Computes the absolute value of a number.
Availability:	All devices
Requires:	#INCLUDE <stdlib.h>

Examples:	`signed int target,actual;`
	`  ...`
	`error = abs(target-actual);`

Example Files:	None
Also See:	labs()

sin( ) cos( ) tan( ) asin( ) acos() atan() sinh() cosh() tanh() atan2()

Syntax:	**val = sin (*rad*)** **val = cos (*rad*)** **val = tan (*rad*)** **rad = asin (*val*)** **rad1 = acos (*val*)** **rad = atan (*val*)** **rad2=atan2(*val*, *val*)** **result=sinh(*value*)** **result=cosh(*value*)** **result=tanh(*value*)**
Parameters:	***rad*** is a float representing an angle in Radians -2pi to 2pi. ***val*** is a float with the range -1.0 to 1.0. ***Value*** is a float
Returns:	rad is a float representing an angle in Radians -pi/2 to pi/2 val is a float with the range -1.0 to 1.0. rad1 is a float representing an angle in Radians 0 to pi rad2 is a float representing an angle in Radians -pi to pi Result is a float
Function:	These functions perform basic Trigonometric functions.

sin	**returns the sine value of the parameter (measured in radians)**
cos	returns the cosine value of the parameter (measured in radians)
tan	returns the tangent value of the parameter (measured in radians)
asin	returns the arc sine value in the range [-pi/2,+pi/2] radians

acos	returns the arc cosine value in the range[0,pi] radians
atan	returns the arc tangent value in the range [-pi/2,+pi/2] radians
atan2	returns the arc tangent of y/x in the range [-pi,+pi] radians
sinh	returns the hyperbolic sine of x
cosh	returns the hyperbolic cosine of x
tanh	returns the hyperbolic tangent of x

Note on error handling:
If "errno.h" is included then the domain and range errors are stored in the errno variable. The user can check the errno to see if an error has occurred and print the error using the perror function.

Domain error occurs in the following cases:
asin: when the argument not in the range[-1,+1]
acos: when the argument not in the range[-1,+1]
atan2: when both arguments are zero

Range error occur in the following cases:
cosh: when the argument is too large
sinh: when the argument is too large

Availability: All devices

Requires: #INCLUDE <math.h>

Examples:

```
float phase;
// Output one sine wave
for(phase=0; phase<2*3.141596; phase+=0.01)
   set_analog_voltage( sin(phase)+1 );
```

Example Files: ex_tank.c

Also See: log(), log10(), exp(), pow(), sqrt()

adc_done( )

Syntax: **value = adc_done();**

Parameters: None

Returns: A short int. TRUE if the A/D converter is done with conversion, FALSE if it is still busy.

Function: Can be polled to determine if the A/D has valid data.

Availability: Only available on devices with built in analog to digital converters

Requires: None

Examples:

```
int16 value;
setup_adc_ports(sAN0|sAN1, VSS_VDD);
setup_adc(ADC_CLOCK_DIV_4|ADC_TAD_MUL_8);
set_adc_channel(0);
read_adc(ADC_START_ONLY);

int1 done = adc_done();
while(!done) {
    done = adc_done();
}
```

```
value = read_adc(ADC_READ_ONLY);
printf("A/C value = %LX\n\r", value);
}
```

Example Files:	None
Also See:	setup_adc(), set_adc_channel(), setup_adc_ports(), read_adc(), ADC Overview

assert( )

Syntax:	**assert (***condition***);**
Parameters:	***condition*** is any relational expression
Returns:	Nothing
Function:	This function tests the condition and if FALSE will generate an error message on STDERR (by default the first USE RS232 in the program). The error message will include the file and line of the assert(). No code is generated for the assert() if you #define NODEBUG. In this way you may include asserts in your code for testing and quickly eliminate them from the final program.
Availability:	All devices
Requires:	assert.h and #USE RS232

Examples:	`assert( number_of_entries<TABLE_SIZE );`
	
	`// If number_of_entries is >= TABLE_SIZE then`
	`// the following is output at the RS232:`
	`// Assertion failed, file myfile.c, line 56`

Example Files:	None
Also See:	#USE RS232, RS232 I/O Overview

atoe

Syntax:	**atoe(**string**);**
Parameters:	***string*** *is a pointer to a null terminated string of characters.*
Returns:	Result is a floating point number
Function:	Converts the string passed to the function into a floating point representation. If the result cannot be represented, the behavior is undefined. This function also handles E format numbers
Availability:	All devices
Requires:	#INCLUDE <stdlib.h>
Examples:	`char string [10];` `float32 x;`

```
strcpy (string, "12E3");
x = atoe(string);
// x is now 12000.00
```

Example Files:	None
Also See:	atoi(), atol(), atoi32(), atof(), printf()

atof( )

Syntax:	**result = atof (*string*)**
Parameters:	***string*** is a pointer to a null terminated string of characters.
Returns:	Result is a floating point number
Function:	Converts the string passed to the function into a floating point representation. If the result cannot be represented, the behavior is undefined.
Availability:	All devices
Requires:	#INCLUDE <stdlib.h>

Examples:	`char string [10];`
	`float x;`
	
	`strcpy (string, "123.456");`
	`x = atof(string);`
	`// x is now 123.456`

Example Files:	ex_tank.c
Also See:	atoi(), atol(), atoi32(), printf()

pin_select()

Syntax:	**pin_select(**peripheral_pin**,** pin**, [**unlock**],**[lock**])**
Parameters:	**peripheral**_pin – a constant string specifying which peripheral pin to map the specified pin to. Refer to #pin_select for all available strings. Using “NULL” for the peripheral_pin parameter will unassign the output peripheral pin that is currently assigned to the pin passed for the pin parameter. **pin** – the pin to map to the specified peripheral pin. Refer to device's header file for pin defines. If the peripheral_pin parameter is an input, passing FALSE for the pin parameter will unassign the pin that is currently assigned to that peripheral pin. **unlock** – optional parameter specifying whether to perform an unlock sequence before writing the RPINRx or RPORx register register determined by peripheral_pin and pin options. Default is TRUE if not specified. The unlock sequence must be performed to allow writes to the RPINRx and RPORx registers. This option allows calling pin_select() multiple times without performing an unlock sequence each time.

	lock – optional parameter specifying whether to perform a lock sequence after writing the RPINRx or RPORx registers. Default is TRUE if not specified. Although not necessary it is a good idea to lock the RPINRx and RPORx registers from writes after all pins have been mapped. This option allows calling pin_select() multiple times without performing a lock sequence each time.
Returns:	Nothing.
Availability:	On device with remappable peripheral pins.
Requires:	Pin defines in device's header file.

Examples:	pin_select("U2TX",PIN_B0);
	
	//Maps PIN_B0 to U2TX //peripheral pin, performs unlock //and lock sequences.
	
	pin_select("U2TX",PIN_B0,TRUE,FALSE);
	
	//Maps PIN_B0 to U2TX //peripheral pin and performs //unlock sequence.
	
	pin_select("U2RX",PIN_B1,FALSE,TRUE);
	
	//Maps PIN_B1 to U2RX //peripheral pin and performs lock //sequence.

Example Files:	None.
Also See:	#pin_select

atoi( ) atol( ) atoi32( )

Syntax:	**ivalue = atoi(*string*)** **or** **lvalue = atol(*string*)** **or** **i32value = atoi32(*string*)**
Parameters:	***string*** is a pointer to a null terminated string of characters.
Returns:	ivalue is an 8 bit int. lvalue is a 16 bit int. i32value is a 32 bit int.
Function:	Converts the string passed to the function into an int representation. Accepts both decimal and hexadecimal argument. If the result cannot be represented, the behavior is undefined.
Availability:	All devices
Requires:	#INCLUDE <stdlib.h>

Examples:	`char string[10];`
	`int x;`
	
	`strcpy(string,"123");`
	`x = atoi(string);`
	`// x is now 123`

Example Files:	input.c
Also See:	printf()

at_clear_interrupts( )

Syntax:	**at_clear_interrupts(**interrupts**);**
Parameters:	**interrupts** - an 8-bit constant specifying which AT interrupts to disable. The constants are defined in the device's header file as: · AT_PHASE_INTERRUPT · AT_MISSING_PULSE_INTERRUPT · AT_PERIOD_INTERRUPT · AT_CC3_INTERRUPT · AT_CC2_INTERRUPT · AT_CC1_INTERRUPT
Returns:	Nothing
Function:	To disable the Angular Timer interrupt flags. More than one interrupt can be cleared at a time by or'ing multiple constants together in a single call, or calling function multiple times for each interrupt to clear.
Availability:	All devices with an AT module.
Requires:	Constants defined in the device's header file

Examples:	`#INT-AT1`
	`void1_isr(void)`
	`[`
	`  if(at_interrupt_active(AT_PERIOD_INTERRUPT))`
	`  [`
	`  handle_period_interrupt();`
	`  at_clear_interrupts(AT_PERIOD_INTERRUPT);`
	`  ]`
	`  if(at_interrupt(active(AT_PHASE_INTERRUPT);`
	`  [`
	`  handle_phase_interrupt();`
	`  at_clear_interrupts(AT_PHASE_INTERRUPT);`
	`  ]`
	`]`

Example Files:	None
Also See:	at_set_resolution(), at_get_resolution(), at_set_missing_pulse_delay(), at_get_missing_pulse_delay(), at_get_period(), at_get_phase_counter(), at_set_set_point(), at_get_set_point(), at_get_set_point_error(), at_enable_interrupts(), at_disable_interrupts(), at_interrupt_active(), at_setup_cc(), at_set_compare_time(), at_get_capture(), at_get_status(), setup_at()

at_disable_interrupts( )

Syntax:	**at_disable_interrupts(**interrupts**);**
Parameters:	**interrupts** - an 8-bit constant specifying which AT interrupts to disable. The constants are defined

	in the device's header file as: · AT_PHASE_INTERRUPT · AT_MISSING_PULSE_INTERRUPT · AT_PERIOD_INTERRUPT · AT_CC3_INTERRUPT · AT_CC2_INTERRUPT · AT_CC1_INTERRUPT
Returns:	Nothing
Function:	To disable the Angular Timer interrupts. More than one interrupt can be disabled at a time by or'ing multiple constants together in a single call, or calling function multiple times for eadch interrupt to be disabled.
Availability:	All devices with an AT module.
Requires:	Constants defined in the device's header file
Examples:	`at_disable_interrupts(AT_PHASE_INTERRUPT);` `at_disable_interrupts(AT_PERIOD_INTERRUPT|AT_CC1_INTERRUPT);`
Example Files:	None
Also See:	at_set_resolution(), at_get_resolution(), at_set_missing_pulse_delay(), at_get_missing_pulse_delay(), at_get_period(), at_get_phase_counter(), at_set_set_point(), at_get_set_point(), at_get_set_point_error(), at_enable_interrupts(), at_clear_interrupts(), at_interrupt_active(), at_setup_cc(), at_set_compare_time(), at_get_capture(), at_get_status(), setup_at()

at_enable_interrupts( )

Syntax:	**at_enable_interrupts(**interrupts**);**
Parameters:	**interrupts** - an 8-bit constant specifying which AT interrupts to enable. The constants are defined in the device's header file as: · AT_PHASE_INTERRUPT · AT_MISSING_PULSE_INTERRUPT · AT_PERIOD_INTERRUPT · AT_CC3_INTERRUPT · AT_CC2_INTERRUPT · AT_CC1_INTERRUPT
Returns:	Nothing
Function:	To enable the Angular Timer interrupts. More than one interrupt can be enabled at a time by or'ing multiple constants together in a single call, or calling function multiple times for each interrupt to be enabled.
Availability:	All devices with an AT module.
Requires:	Constants defined in the device's header file
Examples:	`at_enable_interrupts(AT_PHASE_INTERRUPT);` `at_enable_interrupts(AT_PERIOD_INTERRUPT|AT_CC1_INTERRUPT);`
Example	None

Files:	
Also See:	setup_at(), at_set_resolution(), at_get_resolution(), at_set_missing_pulse_delay(), at_get_missing_pulse_delay(), at_get_phase_counter(), at_set_set_point(), at_get_set_point(), at_get_set_point(), at_get_set_point_error(), at_disable_interrupts(), at_clear_interrupts(), at_interrupt_active(), at_setup_cc(), at_set_compare_time(), at_get_capture(), at_get_status()

at_get_capture( )

Syntax:	**result=at_get_capture(**which**);;**
Parameters:	**which** - an 8-bit constant specifying which AT Capture/Compare module to get the capture time from, can be 1, 2 or 3.
Returns:	A 16-bit integer
Function:	To get one of the Angular Timer Capture/Compare modules capture time.
Availability:	All devices with an AT module.
Requires:	Nothing
Examples:	`result1=at_get_capture(1);` `result2=at_get_capture(2);`
Example Files:	None
Also See:	setup_at(), at_set_resolution(), at_get_resolution(), at_set_missing_pulse_delay(), at_get_missing_pulse_delay(), at_get_phase_counter(), at_set_set_point(), at_get_set_point(), at_get_set_point(), at_get_set_point_error(), at_enable_interrupts(), at_disable_interrupts(), at_clear_interrupts(), at_interrupt_active(), at_setup_cc(), at_set_compare_time(), at_get_status()

at_get_missing_pulse_delay( )

Syntax:	**result=at_get_missing_pulse_delay();**
Parameters:	None.
Returns:	A 16-bit integer
Function:	To setup the Angular Timer Missing Pulse Delay
Availability:	All devices with an AT module.
Requires:	Nothing
Examples:	`result=at_get_missing_pulse_delay();`
Example Files:	None

Also See:	at_set_resolution(), at_get_resolution(), at_set_missing_pulse_delay(), at_get_period(), at_get_phase_counter(), at_set_set_point(), at_get_set_point(), at_get_set_point_error(), at_enable_interrupts(), at_disable_interrupts(), at_clear_interrupts(), at_interrupt_active(), at_setup_cc(), at_set_compare_time(), at_get_capture(), at_get_status(), setup_at()

at_get_period( )

Syntax:	**result=at_get_period();**
Parameters:	None.
Returns:	A 16-bit integer. The MSB of the returned value specifies whether the period counter rolled over one or more times. 1 - counter rolled over at least once, 0 - value returned is valid.
Function:	To get Angular Timer Measured Period
Availability:	All devices with an AT module.
Requires:	Nothing
Examples:	`result=at_get_period();`
Example Files:	None
Also See:	at_set_resolution(), at_get_resolution(), at_set_missing_pulse_delay(), at_get_missing_pulse_delay(), at_get_phase_counter(), at_set_set_point(), at_get_set_point(), at_get_set_point_error(), at_enable_interrupts(), at_disable_interrupts(), at_clear_interrupts(), at_interrupt_active(), at_setup_cc(), at_set_compare_time(), at_get_capture(), at_get_status(), setup_at()

at_get_phase_counter( )

Syntax:	**result=at_get_phase_counter();**
Parameters:	None.
Returns:	A 16-bit integer.
Function:	To get the Angular Timer Phase Counter
Availability:	All devices with an AT module.
Requires:	Nothing
Examples:	`result=at_get_phase_counter();`
Example Files:	None
Also See:	at_set_resolution(), at_get_resolution(), at_set_missing_pulse_delay(),

	at_get_missing_pulse_delay(), at_get_period(), at_set_set_point(), at_get_set_point(), at_get_set_point_error(), at_enable_interrupts(), at_disable_interrupts(), at_clear_interrupts(), at_interrupt_active(), at_setup_cc(), at_set_compare_time(), at_get_capture(), at_get_status(), setup_at()

at_get_resolution( )

Syntax:	**result=at_get_resolution();**
Parameters:	None
Returns:	A 16-bit integer
Function:	To setup the Angular Timer Resolution
Availability:	All devices with an AT module.
Requires:	Nothing
Examples:	`result=at_get_resolution();`
Example Files:	None
Also See:	at_set_resolution(), at_set_missing_pulse_delay(), at_get_missing_pulse_delay(), at_get_period(), at_get_phase_counter(), at_set_set_point(), at_get_set_point(), at_get_set_point_error(), at_enable_interrupts(), at_disable_interrupts(), at_clear_interrupts(), at_interrupt_active(), at_setup_cc(), at_set_compare_time(), at_get_capture(), at_get_status(), setup_at()

at_get_set_point( )

Syntax:	**result=at_get_set_point();**
Parameters:	None
Returns:	A 16-bit integer
Function:	To get the Angular Timer Set Point
Availability:	All devices with an AT module.
Requires:	Nothing
Examples:	`result=at_get_set_point();`
Example Files:	None
Also See:	at_set_resolution(), at_get_resolution(), at_set_missing_pulse_delay(), at_get_missing_pulse_delay(), at_get_period(), at_get_phase_counter(), at_set_set_point(), at_get_set_point_error(), at_enable_interrupts(), at_disable_interrupts(), at_clear_interrupts(), at_interrupt_active(), at_setup_cc(), at_set_compare_time(), at_get_capture(), at_get_status(), setup_at()

.

at_get_set_point_error( )

Syntax:	**result=at_get_set_point_error();**
Parameters:	None
Returns:	A 16-bit integer
Function:	To get the Angular Timer Set Point Error, the error of the measured period value compared to the threshold setting.
Availability:	All devices with an AT module.
Requires:	Nothing
Examples:	`result=at_get_set_point_error();`
Example Files:	None
Also See:	at_set_resolution(), at_get_resolution(), at_set_missing_pulse_delay(), at_get_missing_pulse_delay(), at_get_period(), at_get_phase_counter(), at_set_set_point(), at_get_set_point(), at_enable_interrupts(), at_disable_interrupts(), at_clear_interrupts(), at_interrupt_active(), at_setup_cc(), at_set_compare_time(), at_get_capture(), at_get_status(), setup_at()

.

at_get_status( )

Syntax:	**result=at_get_status();**
Parameters:	None
Returns:	An 8-bit integer. The possible results are defined in the device's header file as: · AT_STATUS_PERIOD_AND_PHASE_VALID · AT_STATUS_PERIOD_LESS_THEN_PREVIOUS
Function:	To get the status of the Angular Timer module.
Availability:	All devices with an AT module.
Requires:	Nothing

Examples:	`if((at_get_status()&AT_STATUS_PERIOD_AND_PHASE_VALID)==`
	`AT_STATUS_PERIOD_AND_PHASE_VALID`
	`[`
	`  Period=at_get_period();`
	`  Phase=at_get_phase();`

```
]
```

Example Files:	None
Also See:	at_set_resolution(), at_get_resolution(), at_set_missing_pulse_delay(), at_get_missing_pulse_delay(), at_get_period(), at_get_phase_counter(), at_set_set_point(), at_get_set_point(), at_get_set_point_error(), at_enable_interrupts(), at_disable_interrupts(), at_clear_interrupts(), at_interrupt_active(), at_setup_cc(), at_set_compare_time(), at_get_capture(), setup_at()

at_interrupt_active( )

Syntax:	**result=at_interrupt_active(**interrupt**);**
Parameters:	**interrupts** - an 8-bit constant specifying which AT interrupts to check if its flag is set. The constants are defined in the device's header file as: · AT_PHASE_INTERRUPT · AT_MISSING_PULSE_INTERRUPT · AT_PERIOD_INTERRUPT · AT_CC3_INTERRUPT · AT_CC2_INTERRUPT · AT_CC1_INTERRUPT
Returns:	TRUE if the specified AT interrupt's flag is set, interrupt is active, or FALSE if the flag is clear, interrupt is not active.
Function:	To check if the specified Angular Timer interrupt flag is set.
Availability:	All devices with an AT module.
Requires:	Constants defined in the device's header file

Examples:

```
#INT-AT1
void1_isr(void)
[
   if(at_interrupt_active(AT_PERIOD_INTERRUPT))
   [
      handle_period_interrupt();
      at_clear_interrupts(AT_PERIOD_INTERRUPT);
   ]
   if(at_interrupt(active(AT_PHASE_INTERRUPT);
   [
      handle_phase_interrupt();
      at_clear_interrupts(AT_PHASE_INTERRUPT);
   ]
]
```

Example Files:	None
Also See:	at_set_resolution(), at_get_resolution(), at_set_missing_pulse_delay(), at_get_missing_pulse_delay(), at_get_period(), at_get_phase_counter(), at_set_set_point(), at_get_set_point(), at_get_set_point_error(), at_enable_interrupts(), at_disable_interrupts(), at_clear_interrupts(), at_setup_cc(), at_set_compare_time(), at_get_capture(), at_get_status(), setup_at()

at_set_compare_time( )

Syntax:	**at_set_compare_time(**which, compare_time**);**
Parameters:	**which** - an 8-bit constant specifying which AT Capture/Compare module to set the compare time for, can be 1, 2, or 3. **compare_time** - a 16-bit constant or variable specifying the value to trigger an interrupt/ouput pulse.
Returns:	Nothing
Function:	To set one of the Angular Timer Capture/Compare module's compare time.
Availability:	All devices with an AT module.
Requires:	Constants defined in the device's header file
Examples:	`at_set_compare_time(1,0x1FF);` `at_set_compare_time(3,compare_time);`
Example Files:	None
Also See:	at_set_resolution(), at_get_resolution(), at_set_missing_pulse_delay(), at_get_missing_pulse_delay(), at_get_period(), at_get_phase_counter(), at_set_set_point(), at_get_set_point(), at_get_set_point_error(), at_enable_interrupts(), at_disable_interrupts(), at_clear_interrupts(), at_interrupt_active(), at_setup_cc(), at_get_capture(), at_get_status(), setup_at()

at_set_missing_pulse_delay( )

Syntax:	**at_set_missing_pulse_delay(pulse_delay);**
Parameters:	**pulse_delay** - a signed 16-bit constant or variable to set the missing pulse delay.
Returns:	Nothing
Function:	To setup the Angular Timer Missing Pulse Delay
Availability:	All devices with an AT module.
Requires:	Nothing
Examples:	`at_set_missing_pulse_delay(pulse_delay);`
Example Files:	None
Also See:	at_set_resolution(), at_get_resolution(), at_get_missing_pulse_delay(), at_get_period(), at_get_phase_counter(), at_set_set_point(), at_get_set_point(), at_get_set_point_error(), at_enable_interrupts(), at_disable_interrupts(), at_clear_interrupts(), at_interrupt_active(), at_setup_cc(), at_set_compare_time(), at_get_capture(), at_get_status(), setup_at()

at_set_resolution( )

Syntax:	**at_set_resolution(**resolution**);**
Parameters:	**resolution** - a 16-bit constant or variable to set the resolution.
Returns:	Nothing
Function:	To setup the Angular Timer Resolution
Availability:	All devices with an AT module.
Requires:	Nothing
Examples:	`at_set_resolution(resolution);`
Example Files:	None
Also See:	at_get_resolution(), at_set_missing_pulse_delay(), at_get_missing_pulse_delay(), at_get_period(), at_get_phase_counter(), at_set_set_point(), at_get_set_point(), at_get_set_point_error(), at_enable_interrupts(), at_disable_interrupts(), at_clear_interrupts(), at_interrupt_active(), at_setup_cc(), at_set_compare_time(), at_get_capture(), at_get_status(), setup_at()

at_set_set_point( )

Syntax:	**at_set_set_point(**set_point**);**
Parameters:	**set_point** - a 16-bit constant or variable to set the set point. The set point determines the threshold setting that the period is compared against for error calculation.
Returns:	Nothing
Function:	To get the Angular Timer Set Point
Availability:	All devices with an AT module.
Requires:	Nothing
Examples:	`at_set_set_point(set_point);`
Example Files:	None
Also See:	at_set_resolution(), at_get_resolution(), at_set_missing_pulse_delay(), at_get_missing_pulse_delay(), at_get_period(), at_get_phase_counter(), at_get_set_point(), at_get_set_point_error(), at_enable_interrupts(), at_disable_interrupts(), at_clear_interrupts(), at_interrupt_active(), at_setup_cc(), at_set_compare_time(), at_get_capture(), at_get_status(), setup_at()

.

at_setup_cc( )

Syntax:	**at_setup_cc(**which, settings**);**
Parameters:	**which** - an 8-bit constant specifying which AT Capture/Compare to setup, can be 1, 2 or 3. **settings** - a 16-bit constant specifying how to setup the specified AT Capture/Compare module. See the device's header file for all options. Some of the typical options include: · AT_CC_ENABLED · AT_CC_DISABLED · AT_CC_CAPTURE_MODE · AT_CC_COMPARE_MODE · AT_CAPTURE_FALLING_EDGE · AT_CAPTURE_RISING_EDGE
Returns:	Nothing
Function:	To setup one of the Angular Timer Capture/Compare modules to the specified settings.
Availability:	All devices with an AT module.
Requires:	Constants defined in the device's header file

Examples:	`at_setup_cc(1,AT_CC_ENABLED|AT_CC_CAPTURE_MODE|`
	`AT_CAPTURE_FALLING_EDGE|AT_CAPTURE_INPUT_ATCAP);`
	
	`at_setup_cc(2,AT_CC_ENABLED|AT_CC_CAPTURE_MODE|`
	`AT_CC_ACTIVE_HIGH);`

Example Files:	None
Also See:	at_set_resolution(), at_get_resolution(), at_set_missing_pulse_delay(), at_get_missing_pulse_delay(), at_get_period(), at_get_phase_counter(), at_set_set_point(), at_get_set_point(), at_get_set_point_error(), at_enable_interrupts(), at_disable_interrupts(), at_clear_interrupts(), at_interrupt_active(), at_set_compare_time(), at_get_capture(), at_get_status(), setup_at()

bit_clear( )

Syntax:	**bit_clear(***var***,** *bit***)**
Parameters:	***var*** may be a any bit variable (any lvalue) ***bit*** is a number 0- 31 representing a bit number, 0 is the least significant bit.
Returns:	undefined
Function:	Simply clears the specified bit (0-7, 0-15 or 0-31) in the given variable. The least significant bit is 0. This function is the similar to: var &= ~(1<<bit);
Availability:	All devices
Requires:	Nothing
Examples:	`int x;` `x=5;`

	`bit_clear(x,2);` `// x is now 1`
Example Files:	ex_patg.c
Also See:	bit_set(), bit_test()

bit_set( )

Syntax:	**bit_set(*var*, *bit*)**
Parameters:	***var*** may be a 8,16 or 32 bit variable (any lvalue) ***bit*** is a number 0- 31 representing a bit number, 0 is the least significant bit.
Returns:	Undefined
Function:	Sets the specified bit (0-7, 0-15 or 0-31) in the given variable. The least significant bit is 0. This function is the similar to: var |= (1<<bit);
Availability:	All devices
Requires:	Nothing

Examples:	`int x;`
	`x=5;`
	`bit_set(x,3);`
	`// x is now 13`

Example Files:	ex_patg.c
Also See:	bit_clear(), bit_test()

bit_test( )

Syntax:	**value = bit_test (*var*, *bit*)**
Parameters:	***var*** may be a 8,16 or 32 bit variable (any lvalue) ***bit*** is a number 0- 31 representing a bit number, 0 is the least significant bit.
Returns:	0 or 1
Function:	Tests the specified bit (0-7,0-15 or 0-31) in the given variable. The least significant bit is 0. This function is much more efficient than, but otherwise similar to: ((var & (1<<bit)) != 0)
Availability:	All devices
Requires:	Nothing

Examples:	`if( bit_test(x,3) || !bit_test (x,1) ){`
	`  //either bit 3 is 1 or bit 1 is 0`
	`}`

```
if(data!=0)
  for(i=31;!bit_test(data, i);i--) ;
// i now has the most significant bit in data
// that is set to a 1
```

Example Files:	ex_patg.c
Also See:	bit_clear(), bit_set()

brownout_enable( )

Syntax:	**brownout_enable (*value*)**
Parameters:	***value*** – TRUE or FALSE
Returns:	undefined
Function:	Enable or disable the software controlled brownout. Brownout will cause the PIC to reset if the power voltage goes below a specific set-point.
Availability:	This function is only available on PICs with a software controlled brownout. This may also require a specific configuration bit/fuse to be set for the brownout to be software controlled.
Requires:	Nothing
Examples:	`brownout_enable(TRUE);`
Example Files:	None
Also See:	restart_cause()

bsearch( )

Syntax:	**ip = bsearch (*&key, base, num, width, compare*)**
Parameters:	***key***: Object to search for ***base***: Pointer to array of search data ***num***: Number of elements in search data ***width***: Width of elements in search data ***compare***: Function that compares two elements in search data
Returns:	bsearch returns a pointer to an occurrence of key in the array pointed to by base. If key is not found, the function returns NULL. If the array is not in order or contains duplicate records with identical keys, the result is unpredictable.
Function:	Performs a binary search of a sorted array
Availability:	All devices
Requires:	#INCLUDE <stdlib.h>

Examples:

```
int nums[5]={1,2,3,4,5};
int compar(const void *arg1,const void *arg2);

void main() {
   int *ip, key;
   key = 3;
   ip = bsearch(&key, nums, 5, sizeof(int), compar);
}

int compar(const void *arg1,const void *arg2)  {
   if ( * (int *) arg1 < ( * (int *) arg2) return -1
   else if ( * (int *) arg1 == ( * (int *) arg2) return 0
   else return 1;
}
```

Example Files: None

Also See: qsort()

calloc( )

Syntax: **ptr=calloc(*nmem*, *size*)**

Parameters: ***nmem*** is an integer representing the number of member objects
size is the number of bytes to be allocated for each one of them.

Returns: A pointer to the allocated memory, if any. Returns null otherwise.

Function: The calloc function allocates space for an array of nmem objects whose size is specified by size. The space is initialized to all bits zero.

Availability: All devices

Requires: #INCLUDE <stdlibm.h>

Examples:

```
int * iptr;
iptr=calloc(5,10);
// iptr will point to a block of memory of
// 50 bytes all initialized to 0.
```

Example Files: None

Also See: realloc(), free(), malloc()

ceil( )

Syntax: **result = ceil (*value*)**

Parameters: ***value*** is a float

Returns: A float

Function: Computes the smallest integer value greater than the argument. CEIL(12.67) is 13.00.

Availability:	All devices
Requires:	#INCLUDE<math.h>

Examples:	`// Calculate cost based on weight rounded`
	`// up to the next pound`
	
	`cost = ceil( weight ) * DollarsPerPound;`

Example Files:	None
Also See:	floor()

clc1_setup_gate() clc2_setup_gate() clc3_setup_gate() clc4_setup_gate()

Syntax:	**clc1_setup_gate(gate, mode);** **clc2_setup_gate(gate, mode);** **clc3_setup_gate(gate, mode);** **clc4_setup_gate(gate, mode);**
Parameters:	**gate** – selects which data gate of the Configurable Logic Cell (CLC) module to setup, value can be 1 to 4. **mode** – the mode to setup the specified data gate of the CLC module into. The options are: CLC_GATE_AND CLC_GATE_NAND CLC_GATE_NOR CLC_GATE_OR CLC_GATE_CLEAR CLC_GATE_SET
Returns:	Undefined
Function:	Sets the logic function performed on the inputs for the specified data gate.
Availability:	On devices with a CLC module.
Returns:	Undefined.

Examples:	`clc1_setup_gate(1, CLC_GATE_AND);`
	`clc1_setup_gate(2, CLC_GATE_NAND);`
	`clc1_setup_gate(3, CLC_GATE_CLEAR);`
	`clc1_setup_gate(4, CLC_GATE_SET);`

Example Files:	None
Also See:	setup_clcx(), clcx_setup_input()

clc1_setup_input() clc2_setup_input() clc3_setup_input() clc4_setup_input()

Syntax:	**clc1_setup_input(**input**,** selection**);** **clc2_setup_input**(input**,** selection**);** **clc3_setup_input(**input**,** selection**);** **clc4_setup_input(**input**,** selection**);**
Parameters:	**input** – selects which input of the Configurable Logic Cell (CLC) module to setup, value can be 1 to 4. **selection** – the actual input for the specified input that is actually connected to the data gates of the CLC module. The options are: CLC_INPUT_0 CLC_INPUT_1 CLC_INPUT_2 CLC_INPUT_3 CLC_INPUT_4 CLC_INPUT_5 CLC_INPUT_6 CLC_INPUT_7
Returns:	Undefined.
Function:	Sets the input for the specified input number that is actually connected to all four data gates of the CLC module. Please refer to the table CLCx DATA INPUT SELECTION in the device's datasheet to determine which of the above selections corresponds to actual input pin or peripheral of the device.
Availability:	On devices with a CLC module.
Returns:	Undefined.

Examples:	`clc1_setup_input(1, CLC_INPUT_0);`
	`clc1_setup_input(2, CLC_INPUT_1);`
	`clc1_setup_input(3, CLC_INPUT_2);`
	`clc1_setup_input(4, CLC_INPUT_3);`

Example Files:	None
Also See:	setup_clcx(), clcx_setup_gate()

clear_interrupt( )

Syntax:	**clear_interrupt(***level***)**
Parameters:	**level** - a constant defined in the devices.h file
Returns:	undefined
Function:	Clears the interrupt flag for the given level. This function is designed for use with a specific interrupt, thus eliminating the GLOBAL level as a possible parameter. Some chips that have interrupt on change for individual pins allow the pin to be specified like INT_RA1.

Availability:	All devices
Requires:	Nothing
Examples:	`clear_interrupt(int_timer1);`
Example Files:	None

Also See:	enable_interrupts() , #INT , Interrupts Overview
	disable_interrupts(), interrupt_actvie()

cog_status( )

Syntax:	**value=cog_status();**
Parameters:	None
Returns:	value - the status of the COG module
Function:	To determine if a shutdown event occurred on the Complementary C (COG) module.
Availability:	All devices with a COG module.
Examples:	`if(cog_status()==COG_AUTO_SHUTDOWN)` `  cog_restart();`
Example Files:	None
Also See:	setup_cog(), set_cog_dead_band(), set_cog_blanking(), set_cog_ph

cog_restart( )

Syntax:	**cog_restart();**
Parameters:	None
Returns:	Nothing
Function:	To restart the Complementary Output Generator (COG) module afte event occurs, when not using auto-restart option of module.
Availability:	All devices with a COG module.
Examples:	`if(cog_status()==COG_AUTO_SHUTDOWN)` `  cog_restart();`
Example Files:	None
Also See:	setup_cog(), set_cog_dead_band(), set_cog_blanking(), set_cog_ph

crc_calc( )

crc_calc8( )

crc_calc16( )

)

Syntax:	**Result = crc_calc (**data,[width]**);** **Result = crc_calc(**ptr,len,[width]**);** **Result = crc_calc8(**data,[width]**);** **Result = crc_calc8(**ptr,len,[width]**);** **Result = crc_calc16(**data,[width]**);** **//same as crc_calc( )** **Result = crc_calc16(**ptr,len,[width]**);** **//same as crc_calc( )**
Parameters:	**data**- This is one double word, word or byte that needs to be processed when using crc_calc16( ), or crc_calc8( ) **ptr**- is a pointer to one or more double words, words or bytes of data **len**- number of double words, words or bytes to process for function calls crc_calc16( ), or crc_calc8( ) **width**- optional parameter used to specify the input data bit width to use with the functions crc_calc16( ), and crc_calc8( ) If not specified, it defaults to the width of the return value of the function, 8-bit for crc_calc8( ), 16-bit for crc_calc16( ) For devices with a 16-bit for CRC the input data bit width is the same as the return bit width, crc_calc16( ) and 8-bit crc_calc8( ).
Returns:	Returns the result of the final CRC calculation.
Function:	This will process one data double word, word or byte or **len** double words, words or bytes of data using the CRC engine.
Availability:	Only the devices with built in CRC module.
Requires:	Nothing
Examples:	`int16 data[8];` `Result = crc_calc(data,8);`
Example Files:	None
Also See:	setup_crc(); crc_init()

crc_init(mode)

Syntax:	**crc_init (*data*);**
Parameters:	***data*** - This will setup the initial value used by write CRC shift register. Most commonly, this register is set to 0x0000 for start of a new CRC calculation.
Returns:	undefined
Function:	Configures the CRCWDAT register with the initial value used for CRC calculations.
Availability:	Only the devices with built in CRC module.
Requires:	Nothing

Examples:	`crc_init (); // Starts the CRC accumulator out at 0`
	`crc_init(0xFEEE); // Starts the CRC accumulator out at 0xFEEE`

Example Files:	None
Also See:	setup_crc(), crc_calc(), crc_calc8()

cwg_status( )

Syntax:	**value = cwg_status( );**
Parameters:	None
Returns:	the status of the CWG module
Function:	To determine if a shutdown event occured causing the module to auto-shutdown
Availability:	On devices with a CWG module.
Examples:	`if(cwg_status( ) == CWG_AUTO_SHUTDOWN)` `  cwg restart( );`
Example Files:	None
Also See:	setup_cwg( ), cwg_restart( )

cwg_restart( )

Syntax:	**cwg_restart( );**
Parameters:	None
Returns:	Nothing

Function:	To restart the CWG module after an auto-shutdown event occurs, when not using auto-raster option of module.
Availability:	On devices with a CWG module.
Examples:	`if(cwg_status( ) == CWG_AUTO_SHUTDOWN)` `  cwg_restart( );`
Example Files:	None
Also See:	setup_cwg( ), cwg_status( )

dac_write( )

Syntax:	**dac_write (**value**)**
Parameters:	**Value**: 8-bit integer value to be written to the DAC module
Returns:	undefined
Function:	This function will write a 8-bit integer to the specified DAC channel.
Availability:	Only available on devices with built in digital to analog converters.
Requires:	Nothing

Examples:	`int i = 0;`
	`setup_dac(DAC_VDD | DAC_OUTPUT);`
	`while(1){`
	`  i++;`
	`  dac_write(i);`
	`}`

Also See:	setup_dac( ), DAC Overview, see header file for device selected

delay_cycles( )

Syntax:	**delay_cycles (***count***)**
Parameters:	***count*** - a constant 1-255
Returns:	undefined
Function:	Creates code to perform a delay of the specified number of instruction clocks (1-255). An instruction clock is equal to four oscillator clocks. The delay time may be longer than requested if an interrupt is serviced during the delay. The time spent in the ISR does not count toward the delay time.
Availability:	All devices

Requires:	Nothing

Examples:	`delay_cycles( 1 ); // Same as a NOP`
	
	`delay_cycles(25); // At 20 mhz a 5us delay`

Example Files:	ex_cust.c
Also See:	delay_us(), delay_ms()

delay_ms( )

Syntax:	**delay_ms (*time*)**
Parameters:	***time*** - a variable 0-65535(int16) or a constant 0-65535 Note: Previous compiler versions ignored the upper byte of an int16, now the upper byte affects the time.
Returns:	undefined
Function:	This function will create code to perform a delay of the specified length. Time is specified in milliseconds. This function works by executing a precise number of instructions to cause the requested delay. It does not use any timers. If interrupts are enabled the time spent in an interrupt routine is not counted toward the time. The delay time may be longer than requested if an interrupt is serviced during the delay. The time spent in the ISR does not count toward the delay time.
Availability:	All devices
Requires:	#USE DELAY

Examples:	`#use delay (clock=20000000)`
	
	`delay_ms( 2 );`
	
	`void delay_seconds(int n) {`
	`  for (;n!=0; n- -)`
	`  delay_ms( 1000 );`
	`}`

Example Files:	ex_sqw.c
Also See:	delay_us(), delay_cycles(), #USE DELAY

delay_us( )

Syntax:	**delay_us (*time*)**
Parameters:	***time*** - a variable 0-65535(int16) or a constant 0-65535 Note: Previous compiler versions ignored the upper byte of an int16, now the upper

	byte affects the time.
Returns:	undefined
Function:	Creates code to perform a delay of the specified length. Time is specified in microseconds. Shorter delays will be INLINE code and longer delays and variable delays are calls to a function. This function works by executing a precise number of instructions to cause the requested delay. It does not use any timers. If interrupts are enabled the time spent in an interrupt routine is not counted toward the time. The delay time may be longer than requested if an interrupt is serviced during the delay. The time spent in the ISR does not count toward the delay time.
Availability:	All devices
Requires:	#USE DELAY

Examples:	`#use delay(clock=20000000)`
	
	`do {`
	`output_high(PIN_B0);`
	`delay_us(duty);`
	`output_low(PIN_B0);`
	`delay_us(period-duty);`
	`} while(TRUE);`

Example Files:	ex_sqw.c
Also See:	delay_ms(), delay_cycles(), #USE DELAY

disable_interrupts( )

Syntax:	**disable_interrupts (*level*)**
Parameters:	***level*** - a constant defined in the devices .h file
Returns:	undefined
Function:	Disables the interrupt at the given level. The GLOBAL level will not disable any of the specific interrupts but will prevent any of the specific interrupts, previously enabled to be active. Valid specific levels are the same as are used in #INT_xxx and are listed in the devices .h file. GLOBAL will also disable the peripheral interrupts on devices that have it. Note that it is not necessary to disable interrupts inside an interrupt service routine since interrupts are automatically disabled. Some chips that have interrupt on change for individual pins allow the pin to be specified like INT_RA1.
Availability:	Device with interrupts (PCM and PCH)
Requires:	Should have a #INT_xxxx, constants are defined in the devices .h file.

Examples:	`disable_interrupts(GLOBAL);  // all interrupts OFF`
	`disable_interrupts(INT_RDA); // RS232 OFF`
	
	`enable_interrupts(ADC_DONE);`
	`enable_interrupts(RB_CHANGE);`
	`  // these enable the interrupts`
	`  // but since the GLOBAL is disabled they`
	`  // are not activated until the following`
	`  // statement:`

	`enable_interrupts(GLOBAL);`
Example Files:	ex_sisr.c, ex_stwt.c
Also See:	enable_interrupts(), clear_interrupt (), #INT_xxxx, Interrupts Overview, interrupt_active()

div( ) ldiv( )

Syntax:	**idiv=div(***num***,** *denom***)** **ldiv =ldiv(***lnum***,** *ldenom***)**
Parameters:	***num*** and ***denom*** are signed integers. ***num*** is the numerator and ***denom*** is the denominator. ***lnum*** and ***ldenom*** are signed longs ***lnum*** is the numerator and ***ldenom*** is the denominator.
Returns:	idiv is a structure of type div_t and lidiv is a structure of type ldiv_t. The div function returns a structure of type div_t, comprising of both the quotient and the remainder. The ldiv function returns a structure of type ldiv_t, comprising of both the quotient and the remainder.
Function:	The div and ldiv function computes the quotient and remainder of the division of the numerator by the denominator. If the division is inexact, the resulting quotient is the integer or long of lesser magnitude that is the nearest to the algebraic quotient. If the result cannot be represented, the behavior is undefined; otherwise quot*denom(ldenom)+rem shall equal num(lnum).
Availability:	All devices.
Requires:	#INCLUDE <STDLIB.H>

Examples:	`div_t idiv;`
	`ldiv_t lidiv;`
	`idiv=div(3,2);`
	`//idiv will contain quot=1 and rem=1`
	
	`lidiv=ldiv(300,250);`
	`//lidiv will contain lidiv.quot=1 and lidiv.rem=50`

Example Files:	None
Also See:	None

enable_interrupts( )

Syntax:	**enable_interrupts (***level***)**
Parameters:	***level*** is a constant defined in the devices *.*h* file.
Returns:	undefined.
Function:	This function enables the interrupt at the given level. An interrupt procedure should have been defined for the indicated interrupt.

	The GLOBAL level will not enable any of the specific interrupts, but will allow any of the specified interrupts previously enabled to become active. Some chips that have an interrupt on change for individual pins all the pin to be specified, such as INT_RA1. For interrupts that use edge detection to trigger, it can be setup in the enable_interrupts( ) function without making a separate call to the set_int_edge( ) function. Enabling interrupts does not clear the interrupt flag if there was a pending interrupt prior to the call. Use the clear_interrupt( ) function to clear pending interrupts before the call to enable_interrupts( ) to discard the prior interrupts.
Availability:	Devices with interrupts.
Requires:	Should have a #INT_XXXX to define the ISR, and constants are defined in the devices *.*h* file.

Examples:	`enable_interrupts(GLOBAL);`
	`enable_interrupts(INT_TIMER0);`
	`enable_interrupts( INT_EXT_H2L );`

Example Files:	ex_sisr.c, ex_stwt.c
Also See:	disable interrupts(), clear_interrupt (), ext_int_edge( ), #INT_xxxx, Interrupts Overview, interrupt_active()

erase_eeprom( )

Syntax:	**erase_eeprom (address);**
Parameters:	address is 8 bits on PCB parts.
Returns:	undefined
Function:	This will erase a row of the EEPROM or Flash Data Memory.
Availability:	PCB devices with EEPROM like the 12F519
Requires:	Nothing
Examples:	`erase_eeprom(0);  // erase the first row of the EEPROM (8  bytes)`
Example Files:	None
Also See:	write program eeprom(), write program memory(), Program Eeprom Overview

erase_program_eeprom( )

Syntax:	**erase_program_eeprom (*address*);**
Parameters:	***address*** is 16 bits on PCM parts and 32 bits on PCH parts . The least significant bits

	may be ignored.
Returns:	undefined
Function:	Erases FLASH_ERASE_SIZE bytes to 0xFFFF in program memory. FLASH_ERASE_SIZE varies depending on the part. For example, if it is 64 bytes then the least significant 6 bits of address is ignored. See write_program_memory() for more information on program memory access.
Availability:	Only devices that allow writes to program memory.
Requires:	Nothing
Examples:	`for(i=0x1000;i<=0x1fff;i+=getenv("FLASH_ERASE_SIZE"))` `erase_program_memory(i);`
Example Files:	None
Also See:	write program eeprom(), write program memory(), Program Eeprom Overview

exp( )

Syntax:	**result = exp (*value*)**
Parameters:	***value*** is a float
Returns:	A float
Function:	Computes the exponential function of the argument. This is e to the power of value where e is the base of natural logarithms. exp(1) is 2.7182818. Note on error handling: If "errno.h" is included then the domain and range errors are stored in the errno variable. The user can check the errno to see if an error has occurred and print the error using the perror function. Range error occur in the following case: • exp: when the argument is too large
Availability:	All devices
Requires:	#INCLUDE <math.h>

Examples:	`// Calculate x to the power of y`
	
	`x_power_y = exp( y * log(x) );`

Example Files:	None
Also See:	pow(), log(), log10()

ext_int_edge( )

Syntax:	**ext_int_edge (*source*, *edge*)**
Parameters:	***source*** is a constant 0,1 or 2 for the PIC18XXX and 0 otherwise. Source is optional and defaults to 0. ***edge*** is a constant H_TO_L or L_TO_H representing "high to low" and "low to high"
Returns:	undefined
Function:	Determines when the external interrupt is acted upon. The edge may be L_TO_H or H_TO_L to specify the rising or falling edge.
Availability:	Only devices with interrupts (PCM and PCH)
Requires:	Constants are in the devices .h file

Examples:	`ext_int_edge( 2, L_TO_H); // Set up PIC18 EXT2`
	`ext_int_edge( H_TO_L );  // Sets up EXT`

Example Files:	ex_wakup.c
Also See:	#INT_EXT , enable_interrupts() , disable_interrupts() , Interrupts Overview

fabs( )

Syntax:	**result=fabs (*value*)**
Parameters:	***value*** is a float
Returns:	result is a float
Function:	The fabs function computes the absolute value of a float
Availability:	All devices.
Requires:	#INCLUDE <math.h>

Examples:	`float result;`
	`result=fabs(-40.0)`
	`// result is 40.0`

Example Files:	None
Also See:	abs(), labs()

getc( ) getch( ) getchar( ) fgetc( )

Syntax:	**value = getc()** **value = fgetc(*stream*)** **value=getch()** **value=getchar()**
Parameters:	***stream*** is a stream identifier (a constant byte)
Returns:	An 8 bit character
Function:	This function waits for a character to come in over the RS232 RCV pin and returns the character. If you do not want to hang forever waiting for an incoming character use kbhit() to test for a character available. If a built-in USART is used the hardware can buffer 3 characters otherwise GETC must be active while the character is being received by the PIC®. If fgetc() is used then the specified stream is used where getc() defaults to STDIN (the last USE RS232).
Availability:	All devices
Requires:	#USE RS232

Examples:	`printf("Continue (Y,N)?");`
	`do {`
	`  answer=getch();`
	`}while(answer!='Y' && answer!='N');`
	
	`#use rs232(baud=9600,xmit=pin_c6,`
	`  rcv=pin_c7,stream=HOSTPC)`
	`#use rs232(baud=1200,xmit=pin_b1,`
	`  rcv=pin_b0,stream=GPS)`
	`#use rs232(baud=9600,xmit=pin_b3,`
	`  stream=DEBUG)`
	`...`
	`while(TRUE) {`
	`  c=fgetc(GPS);`
	`  fputc(c,HOSTPC);`
	`  if(c==13)`
	`  fprintf(DEBUG,"Got a CR\r\n");`
	`}`

Example Files:	ex_stwt.c
Also See:	putc(), kbhit(), printf(), #USE RS232, input.c, RS232 I/O Overview

gets( ) fgets( )

Syntax:	**gets (*string*)** **value = fgets (*string*, *stream*)**
Parameters:	***string*** is a pointer to an array of characters. ***Stream*** is a stream identifier (a constant byte)
Returns:	undefined

Function:	Reads characters (using getc()) into the string until a RETURN (value 13) is encountered. The string is terminated with a 0. Note that INPUT.C has a more versatile get_string function. If fgets() is used then the specified stream is used where gets() defaults to STDIN (the last USE RS232).
Availability:	All devices
Requires:	#USE RS232

Examples:	`char string[30];`
	
	`printf("Password: ");`
	`gets(string);`
	`if(strcmp(string, password))`
	`  printf("OK");`

Example Files:	None
Also See:	getc(), get_string in input.c

floor( )

Syntax:	**result = floor (*value*)**
Parameters:	***value*** is a float
Returns:	result is a float
Function:	Computes the greatest integer value not greater than the argument. Floor (12.67) is 12.00.
Availability:	All devices.
Requires:	#INCLUDE <math.h>

Examples:	`// Find the fractional part of a value`
	
	`frac = value - floor(value);`

Example Files:	None
Also See:	ceil()

fmod( )

Syntax:	**result= fmod (*val1*, *val2*)**
Parameters:	***val1*** is a float ***val2*** is a float
Returns:	result is a float

Function:	Returns the floating point remainder of val1/val2. Returns the value val1 - i*val2 for some integer "i" such that, if val2 is nonzero, the result has the same sign as val1 and magnitude less than the magnitude of val2.
Availability:	All devices.
Requires:	#INCLUDE <math.h>

Examples:	`float result;`
	`result=fmod(3,2);`
	`// result is 1`

Example Files:	None
Also See:	None

printf( ) fprintf( )

Syntax:	**printf (***string***)** **or** **printf (***cstring***, *values*...)** **or** **printf (***fname***, *cstring***, *values*...)** **fprintf (***stream***, *cstring***, *values*...)**
Parameters:	***String*** is a constant string or an array of characters null terminated. ***Values*** is a list of variables separated by commas, fname is a function name to be used for outputting (default is putc is none is specified. ***Stream*** is a stream identifier (a constant byte). Note that format specifies do not work in ram band strings.
Returns:	undefined
Function:	Outputs a string of characters to either the standard RS-232 pins (first two forms) or to a specified function. Formatting is in accordance with the string argument. When variables are used this string must be a constant. The % character is used within the string to indicate a variable value is to be formatted and output. Longs in the printf may be 16 or 32 bit. A %% will output a single %. Formatting rules for the % follows. See the Expressions > Constants and Trigraph sections of this manual for other escape character that may be part of the string. If fprintf() is used then the specified stream is used where printf() defaults to STDOUT (the last USE RS232). Format: The format takes the generic form %nt. n is optional and may be 1-9 to specify how many characters are to be outputted, or 01-09 to indicate leading zeros, or 1.1 to 9.9 for floating point and %w output. t is the type and may be one of the following:

c	Character
s	String or character
u	Unsigned int
d	Signed int
Lu	Long unsigned int

Ld	Long signed int
x	Hex int (lower case)
X	Hex int (upper case)
Lx	Hex long int (lower case)
LX	Hex long int (upper case)
f	Float with truncated decimal
g	Float with rounded decimal
e	Float in exponential format
w	Unsigned int with decimal place inserted. Specify two numbers for n. The first is a total field width. The second is the desired number of decimal places.

Example formats:

Specifier	Value=0x12	Value=0xfe
%03u	018	254
%u	18	254
%2u	18	*
%5	18	254
%d	18	-2
%x	12	fe
%X	12	FE
%4X	0012	00FE
%3.1w	1.8	25.4

* Result is undefined - Assume garbage.

Availability: All Devices

Requires: #USE RS232 (unless fname is used)

Examples:

```
byte  x,y,z;
printf("HiThere");
printf("RTCCValue=>%2x\n\r",get_rtcc());
printf("%2u %X %4X\n\r",x,y,z);
printf(LCD_PUTC, "n=%u",n);
```

Example Files: ex_admm.c, ex_lcdkb.c

Also See: atoi(), puts(), putc(), getc() (for a stream example), RS232 I/O Overview

putc( ) putchar( ) fputc( )

Syntax:
putc (*cdata***)**
putchar (*cdata***)**
fputc(*cdata***,** *stream***)**

Parameters:
cdata is a 8 bit character.
Stream is a stream identifier (a constant byte)

Returns: undefined

Function: This function sends a character over the RS232 XMIT pin. A #USE RS232 must appear before this call to determine the baud rate and pin used. The #USE RS232 remains in effect until another is encountered in the file.

If fputc() is used then the specified stream is used where putc() defaults to STDOUT (the last USE RS232).

Availability:	All devices
Requires:	#USE RS232

Examples:	`putc('*');`
	`for(i=0; i<10; i++)`
	`  putc(buffer[i]);`
	`putc(13);`

Example Files:	ex_tgetc.c
Also See:	getc(), printf(), #USE RS232, RS232 I/O Overview

puts( ) fputs( )

Syntax:	**puts (***string***).** **fputs (***string***,** *stream***)**
Parameters:	***string*** is a constant string or a character array (null-terminated). ***Stream*** is a stream identifier (a constant byte)
Returns:	undefined
Function:	Sends each character in the string out the RS232 pin using putc(). After the string is sent a CARRIAGE-RETURN (13) and LINE-FEED (10) are sent. In general printf() is more useful than puts(). If fputs() is used then the specified stream is used where puts() defaults to STDOUT (the last USE RS232)
Availability:	All devices
Requires:	#USE RS232

Examples:	`puts( " ----------- " );`
	`puts( " |  HI  | " );`
	`puts( " ----------- " );`

Example Files:	None
Also See:	printf(), gets(), RS232 I/O Overview

free( )

Syntax:	**free(***ptr***)**
Parameters:	***ptr*** is a pointer earlier returned by the calloc, malloc or realloc.
Returns:	No value
Function:	The free function causes the space pointed to by the ptr to be deallocated, that is made available for further allocation. If ptr is a null pointer, no action occurs. If the ptr does not match a pointer earlier returned by the calloc, malloc or realloc, or if the space has been

	deallocated by a call to free or realloc function, the behavior is undefined.
Availability:	All devices.
Requires:	#INCLUDE <stdlibm.h>

Examples:	`int * iptr;`
	`iptr=malloc(10);`
	`free(iptr)`
	`// iptr will be deallocated`

Example Files:	None
Also See:	realloc(), malloc(), calloc()

frexp( )

Syntax:	**result=frexp (***value***, &***exp***);**
Parameters:	***value*** is a float ***exp*** is a signed int.
Returns:	result is a float
Function:	The frexp function breaks a floating point number into a normalized fraction and an integral power of 2. It stores the integer in the signed int object exp. The result is in the interval [1/2 to1) or zero, such that value is result times 2 raised to power exp. If value is zero then both parts are zero.
Availability:	All devices.
Requires:	#INCLUDE <math.h>

Examples:	`float result;`
	`signed int exp;`
	`result=frexp(.5,&exp);`
	`//  result is .5 and exp is 0`

Example Files:	None
Also See:	ldexp(), exp(), log(), log10(), modf()

scanf( )

Syntax:	**scanf(**cstring**);** **scanf(**cstring, values...**)** **fscanf(**stream, cstring, values...**)**
Parameters:	***cstring*** is a constant string. **values** is a list of variables separated by commas. **stream** is a stream identifier.

Returns: 0 if a failure occurred, otherwise it returns the number of conversion specifiers that were read in, plus the number of constant strings read in.

Function: Reads in a string of characters from the standard RS-232 pins and formats the string according to the format specifiers. The format specifier character (%) used within the string indicates that a conversion specification is to be done and the value is to be saved into the corresponding argument variable. A %% will input a single %. Formatting rules for the format specifier as follows:

If fscanf() is used, then the specified stream is used, where scanf() defaults to STDIN (the last USE RS232).

Format:
The format takes the generic form %nt. **n** is an option and may be 1-99 specifying the field width, the number of characters to be inputted. **t** is the type and maybe one of the following:

c	Matches a sequence of characters of the number specified by the field width (1 if no field width is specified). The corresponding argument shall be a pointer to the initial character of an array long enough to accept the sequence.
s	Matches a sequence of non-white space characters. The corresponding argument shall be a pointer to the initial character of an array long enough to accept the sequence and a terminating null character, which will be added automatically.
u	Matches an unsigned decimal integer. The corresponding argument shall be a pointer to an unsigned integer.
Lu	Matches a long unsigned decimal integer. The corresponding argument shall be a pointer to a long unsigned integer.
d	Matches a signed decimal integer. The corresponding argument shall be a pointer to a signed integer.
Ld	Matches a long signed decimal integer. The corresponding argument shall be a pointer to a long signed integer.
o	Matches a signed or unsigned octal integer. The corresponding argument shall be a pointer to a signed or unsigned integer.
Lo	Matches a long signed or unsigned octal integer. The corresponding argument shall be a pointer to a long signed or unsigned integer.
x or X	Matches a hexadecimal integer. The corresponding argument shall be a pointer to a signed or unsigned integer.
Lx or LX	Matches a long hexadecimal integer. The corresponding argument shall be a pointer to a long signed or unsigned integer.
i	Matches a signed or unsigned integer. The corresponding argument shall be a pointer to a signed or unsigned integer.
Li	Matches a long signed or unsigned integer. The corresponding argument shall be a pointer to a long signed or unsigned integer.
f,g or e	Matches a floating point number in decimal or exponential format. The corresponding argument shall be a pointer to a float.
[	Matches a non-empty sequence of characters from a set of expected characters. The sequence of characters included in the set are made up of all character following the left bracket ([) up to the matching right bracket (]). Unless the first character after the left bracket is a **^**, in which case the set of characters contain

	all characters that do not appear between the brackets. If a **-** character is in the set and is not the first or second, where the first is a **^**, nor the last character, then the set includes all characters from the character before the **-** to the character after the **-**. For example, %[a-z] would include all characters from **a** to **z** in the set and %[^a-z] would exclude all characters from **a** to **z** from the set. The corresponding argument shall be a pointer to the initial character of an array long enough to accept the sequence and a terminating null character, which will be added automatically.
n	Assigns the number of characters read thus far by the call to scanf() to the corresponding argument. The corresponding argument shall be a pointer to an unsigned integer.
	An optional assignment-suppressing character (*****) can be used after the format specifier to indicate that the conversion specification is to be done, but not saved into a corresponding variable. In this case, no corresponding argument variable should be passed to the scanf() function.
	A string composed of ordinary non-white space characters is executed by reading the next character of the string. If one of the inputted characters differs from the string, the function fails and exits. If a white-space character precedes the ordinary non-white space characters, then white-space characters are first read in until a non-white space character is read.
	White-space characters are skipped, except for the conversion specifiers **[**, **c** or **n**, unless a white-space character precedes the **[** or **c** specifiers.

Availability:	All Devices
Requires:	#USE RS232

Examples:	`char name[2-];`
	`unsigned int8 number;`
	`signed int32 time;`
	
	`if(scanf("%u%s%ld",&number,name,&time))`
	`  printf"\r\nName: %s, Number: %u, Time: %ld",name,number,time);`

Example Files:	None
Also See:	RS232 I/O Overview, getc(), putc(), printf()

get_capture( )

Syntax:	**value = get_capture(*x*)**
Parameters:	***x*** defines which ccp module to read from.
Returns:	A 16-bit timer value.

Function:	This function obtains the last capture time from the indicated CCP module
Availability:	Only available on devices with Input Capture modules
Requires:	None
Examples:	
Example Files:	ex_ccpmp.c
Also See:	setup_ccpx( )

get_capture_event()

Syntax:	**result = get_capture_event([**stream**]);**
Parameters:	**stream** – optional parameter specifying the stream defined in #USE CAPTURE.
Returns:	TRUE if a capture event occurred, FALSE otherwise.
Function:	To determine if a capture event occurred.
Availability:	All devices.
Requires:	#USE CAPTURE

Examples:	#USE CAPTURE(INPUT=PIN_C2,CAPTURE_RISING,TIMER=1,FASTEST)
	if(get_capture_event())
	  result = get_capture_time();

Example Files:	None
Also See:	#use_capture, get_capture_time()

get_capture_time()

Syntax:	**result = get_capture_time([stream]);**
Parameters:	stream – optional parameter specifying the stream defined in #USE CAPTURE.
Returns:	An int16 value representing the last capture time.
Function:	To get the last capture time.
Availability:	All devices.

Requires:	#USE CAPTURE
Examples:	`#USE CAPTURE(INPUT=PIN_C2,CAPTURE_RISING,TIMER=1,FASTEST)` `result = get_capture_time();`
Example Files:	None
Also See:	#use_capture, get_capture_event()

get_capture32()

Syntax:	**result = get_capture32(**x,[wait]**);**
Parameters:	**x** is 1-16 and defines which input capture result buffer modules to read from. **wait** is an optional parameter specifying if the compiler should read the oldest result in the bugger or the next result to enter the buffer.
Returns:	A 32-bit timer value
Function:	If **wait** is true, the current capture values in the result buffer are cleared, and the next result to be sent to the buffer is returned. If **wait** is false, the default setting, the first value currently in the buffer is returned. However, the buffer will only hold four results while waiting for them to be read, so if get_capture32 is not being called for every capture event. When **wait** is false, the buffer will fill with old capture values and any new results will be lost.
Availability:	Only devices with a 32-bit Input Capture module
Requires:	Nothing

Examples:	`setup_timer2(TMR_INTERNAL | TMR_DIV_BY_1 | TMR_32_BIT);`
	`setup_capture(1,CAPTURE_FE | CAPTURE_TIMER2 | CAPTURE_32_BIT);`
	`while(TRUE) {`
	`  timerValue=get_capture32(1,TRUE);`
	`  printf("Capture 1 occurred at: %LU", timerValue);`
	`}`

Example Files:	None
Also See:	setup_capture(), setup_compare(), get_capture(), Input Capture Overview

get_hspwm_capture( )

Syntax:	**result=get_hspwm_capture(**unit**);**
Parameters:	**unit** - The High Speed PWM unit to set.
Returns:	Unsigned in16 value representing the capture PWM time base value.
Function:	Gets the captured PWM time base value from the leading edge detection on the current-limit input.

Availability:	Only on devices with a built-in High Speed PWM module (dsPIC33FJxxGSxxx, dsPIC33EPxxxMUxxx, dsPIC33EPxxxMCxxx, and dsPIC33EVxxxGMxxx devices)
Requires:	None
Examples:	`result=get_hspwm_capture(1);`
Example Files:	None
Also See:	setup_hspwm_unit(), set_hspwm_phase(), set_hspwm_duty(), set_hspwm_event(), setup_hspwm_blanking(), setup_hspwm_trigger(), set_hspwm_override(), setup_hspwm_chop_clock(), setup_hspwm_unit_chop_clock() setup_hspwm(), setup_hspwm_secondary()

get_nco_accumulator( )

Syntax:	**value =get_nco_accumulator( );**
Parameters:	none
Returns:	current value of accumulator.
Availability:	On devices with a NCO module.
Examples:	`value = get_nco_accumulator( );`
Example Files:	None
Also See:	setup_nco( ), set_nco_inc_value( ), get_nco_inc_value( )

get_nco_inc_value( )

Syntax:	**value =get_nco_inc_value( );**
Parameters:	None
Returns:	- current value set in increment registers.
Availability:	On devices with a NCO module.
Examples:	`value = get_nco_inc_value( );`
Example Files:	None
Also See:	setup_nco( ), set_nco_inc_value( ), get_nco_accumulator( )

get_ticks( )

Syntax:	**value = get_ticks**([stream]**);**
Parameters:	**stream** – optional parameter specifying the stream defined in #USE TIMER.
Returns:	– a 8, 16 or 32 bit integer. (int8, int16 or int32)
Function:	Returns the current tick value of the tick timer. The size returned depends on the size of the tick timer.
Availability:	All devices.
Requires:	#USE TIMER(options)

Examples:	`#USE TIMER(TIMER=1,TICK=1ms,BITS=16,NOISR)`
	
	`void main(void) {`
	`  unsigned int16 current_tick;`
	
	`  current_tick = get_ticks();`
	`}`

Example Files:	None
Also See:	**#USE TIMER**, **set_ticks()**

get_timerA( )

Syntax:	**value=get_timerA();**
Parameters:	none
Returns:	The current value of the timer as an int8
Function:	Returns the current value of the timer. All timers count up. When a timer reaches the maximum value it will flip over to 0 and continue counting (254, 255, 0, 1, 2, …).
Availability:	This function is only available on devices with Timer A hardware.
Requires:	Nothing
Examples:	`set_timerA(0);` `while(timerA < 200);`
Example Files:	none
Also See:	set_timerA( ), setup_timer_A( ), TimerA Overview

get_timerB( )

Syntax:	**value=get_timerB();**

Parameters:	none
Returns:	The current value of the timer as an int8
Function:	Returns the current value of the timer. All timers count up. When a timer reaches the maximum value it will flip over to 0 and continue counting (254, 255, 0, 1, 2, …).
Availability:	This function is only available on devices with Timer B hardware.
Requires:	Nothing
Examples:	`set_timerB(0);` `while(timerB < 200);`
Example Files:	none
Also See:	set_timerB( ), setup_timer_B( ), TimerB Overview

get_timerx( )

Syntax:	**value=get_timer0()** **Same as:** **value=get_rtcc()** **value=get_timer1()** **value=get_timer2()** **value=get_timer3()** **value=get_timer4()** **value=get_timer5()** **value=get_timer6()** **value=get_timer7()** **value=get_timer8()** **value=get_timer10()** **value=get_timer12()**
Parameters:	None
Returns:	Timers 1, 3, 5 and 7 return a 16 bit int. Timers 2 ,4, 6, 8, 10 and 12 return an 8 bit int. Timer 0 (AKA RTCC) returns a 8 bit int except on the PIC18XXX where it returns a 16 bit int.
Function:	Returns the count value of a real time clock/counter. RTCC and Timer0 are the same. All timers count up. When a timer reaches the maximum value it will flip over to 0 and continue counting (254, 255, 0, 1, 2...).
Availability:	Timer 0 - All devices Timers 1 & 2 - Most but not all PCM devices Timer 3, 5 and 7 - Some PIC18 and Enhanced PIC16 devices Timer 4,6,8,10 and 12- Some PIC18 and Enhanced PIC16 devices
Requires:	Nothing
Examples:	`set_timer0(0);` `while ( get_timer0() < 200 ) ;`
Example Files:	ex_stwt.c
Also See:	set_timerx() , Timer0 Overview , Timer1 Overview , Timer2 Overview , Timer5 Overview

get_tris_x( )

Syntax:	**value = get_tris_A();** **value = get_tris_B();** **value = get_tris_C();** **value = get_tris_D();** **value = get_tris_E();** **value = get_tris_F();** **value = get_tris_G();** **value = get_tris_H();** **value = get_tris_J();** **value = get_tris_K()**
Parameters:	None
Returns:	int16, the value of TRIS register
Function:	Returns the value of the TRIS register of port A, B, C, D, E, F, G, H, J, or K.
Availability:	All devices.
Requires:	Nothing
Examples:	`tris_a = GET_TRIS_A();`
Example Files:	None
Also See:	input(), output_low(), output_high()

getenv( )

Syntax:	**value = getenv (*cstring*);**
Parameters:	cstring is a constant string with a recognized keyword
Returns:	A constant number, a constant string or 0
Function:	This function obtains information about the execution environment. The following are recognized keywords. This function returns a constant 0 if the keyword is not understood.

FUSE_SET:fffff	**Returns 1 if fuse fffff is enabled**
FUSE_VALID:fffff	Returns 1 if fuse fffff is valid
INT:iiiii	Returns 1 if the interrupt iiiii is valid
ID	Returns the device ID (set by #ID)
DEVICE	Returns the device name string (like "PIC16C74")

CLOCK	Returns the MPU FOSC
VERSION	Returns the compiler version as a float
VERSION_STRING	Returns the compiler version as a string
PROGRAM_MEMORY	Returns the size of memory for code (in words)
STACK	Returns the stack size
SCRATCH	Returns the start of the compiler scratch area
DATA_EEPROM	Returns the number of bytes of data EEPROM
EEPROM_ADDRESS	Returns the address of the start of EEPROM. 0 if not supported by the device.
READ_PROGRAM	Returns a 1 if the code memory can be read
ADC_CHANNELS	Returns the number of A/D channels
ADC_RESOLUTION	Returns the number of bits returned from READ_ADC()
ICD	Returns a 1 if this is being compiled for a ICD
SPI	Returns a 1 if the device has SPI
USB	Returns a 1 if the device has USB
CAN	Returns a 1 if the device has CAN
I2C_SLAVE	Returns a 1 if the device has I2C slave H/W
I2C_MASTER	Returns a 1 if the device has I2C master H/W
PSP	Returns a 1 if the device has PSP
COMP	Returns a 1 if the device has a comparator
VREF	Returns a 1 if the device has a voltage reference
LCD	Returns a 1 if the device has direct LCD H/W
UART	Returns the number of H/W UARTs
AUART	Returns 1 if the device has an ADV UART
CCPx	Returns a 1 if the device has CCP number x
TIMERx	Returns a 1 if the device has TIMER number x

FLASH_WRITE_SIZE	Smallest number of bytes that can be written to FLASH
FLASH_ERASE_SIZE	Smallest number of bytes that can be erased in FLASH
BYTES_PER_ADDRESS	Returns the number of bytes at an address location
BITS_PER_INSTRUCTION	Returns the size of an instruction in bits
RAM	Returns the number of RAM bytes available for your device.
SFR:name	Returns the address of the specified special file register. The output format can be used with the preprocessor command #bit. name must match SFR denomination of your target PIC (example: STATUS, INTCON, TXREG, RCREG, etc)
BIT:name	Returns the bit address of the specified special file register bit. The output format will be in “address:bit”, which can be used with the preprocessor command #byte. name must match SFR.bit denomination of your target PIC (example: C, Z, GIE, TMR0IF, etc)
SFR_VALID:name	Returns TRUE if the specified special file register name is valid and exists for your target PIC (example: getenv("SFR_VALID:INTCON"))
BIT_VALID:name	Returns TRUE if the specified special file register bit is valid and exists for your target PIC (example: getenv("BIT_VALID:TMR0IF"))
PIN:PB	Returns 1 if PB is a valid I/O PIN (like A2)
UARTx_RX	Returns UARTxPin (like PINxC7)
UARTx_TX	Returns UARTxPin (like PINxC6)
SPIx_DI	Returns SPIxDI Pin
SPIxDO	Returns SPIxDO Pin
SPIxCLK	Returns SPIxCLK Pin
ETHERNET	Returns 1 if device supports Ethernet
QEI	Returns 1 if device has QEI

DAC	Returns 1 if device has a D/A Converter
DSP	Returns 1 if device supports DSP instructions
DCI	Returns 1 if device has a DCI module
DMA	Returns 1 if device supports DMA
CRC	Returns 1 if device has a CRC module
CWG	Returns 1 if device has a CWG module
NCO	Returns 1 if device has a NCO module
CLC	Returns 1 if device has a CLC module
DSM	Returns 1 if device has a DSM module
OPAMP	Returns 1 if device has op amps
RTC	Returns 1 if device has a Real Time Clock
CAP_SENSE	Returns 1 if device has a CSM cap sense module and 2 if it has a CTMU module
EXTERNAL_MEMORY	Returns 1 if device supports external program memory
INSTRUCTION_CLOCK	Returns the MPU instruction clock
ENH16	Returns 1 for Enhanced 16 devices

Availability: All devices

Requires: Nothing

Examples:

```
#IF  getenv("VERSION")<3.050
   #ERROR  Compiler version too old
#ENDIF

for(i=0;i<getenv("DATA_EEPROM");i++)
   write_eeprom(i,0);

#IF getenv("FUSE_VALID:BROWNOUT")
   #FUSE BROWNOUT
#ENDIF



#byte status_reg=GETENV("SFR:STATUS")



#bit carry flag=GETENV("BIT:C")
```

Example Files: None

Also See:	None

gets( ) fgets( )

Syntax:	**gets (***string***)** **value = fgets (***string***, *stream***)**
Parameters:	***string*** is a pointer to an array of characters. ***Stream*** is a stream identifier (a constant byte)
Returns:	undefined
Function:	Reads characters (using getc()) into the string until a RETURN (value 13) is encountered. The string is terminated with a 0. Note that INPUT.C has a more versatile get_string function. If fgets() is used then the specified stream is used where gets() defaults to STDIN (the last USE RS232).
Availability:	All devices
Requires:	#USE RS232

Examples:	`char string[30];`
	
	`printf("Password: ");`
	`gets(string);`
	`if(strcmp(string, password))`
	`  printf("OK");`

Example Files:	None
Also See:	getc(), get_string in input.c

goto_address( )

Syntax:	**goto_address(***location***);**
Parameters:	location is a ROM address, 16 or 32 bit int.
Returns:	Nothing
Function:	This function jumps to the address specified by location. Jumps outside of the current function should be done only with great caution. This is not a normally used function except in very special situations.
Availability:	All devices
Requires:	Nothing
Examples:	`#define LOAD_REQUEST PIN_B1`

```
#define LOADER 0x1f00

if(input(LOAD_REQUEST))
   goto_address(LOADER);
```

Example Files:	setjmp.h
Also See:	label_address( )

high_speed_adc_done( )

Syntax:	**value = high_speed_adc_done([*pair*]);**
Parameters:	**pair** – Optional parameter that determines which ADC pair's ready flag to check. If not used all ready flags are checked.
Returns:	An int16. If pair is used 1 will be return if ADC is done with conversion, 0 will be return if still busy. If pair isn't use it will return a bit map of which conversion are ready to be read. For example a return value of 0x0041 means that ADC pair 6, AN12 and AN13, and ADC pair 0, AN0 and AN1, are ready to be read.
Function:	Can be polled to determine if the ADC has valid data to be read.
Availability:	Only on dsPIC33FJxxGSxxx devices.
Requires:	None

Examples:	`int16 result[2]`
	`setup_high_speed_adc_pair(1,  INDIVIDUAL_SOFTWARE_TRIGGER);`
	`setup_high_speed_adc( ADC_CLOCK_DIV_4);`
	
	`read_high_speed_adc(1, ADC_START_ONLY);`
	`while(!high_speed_adc_done(1));`
	`read_high_speed_adc(1, ADC_READ_ONLY, result);`
	`printf("AN2 value = %LX, AN3 value = %LX\n\r",result[0],result[1]);`

Example Files:	None
Also See:	setup_high_speed_adc(), setup_high_speed_adc_pair(), read_high_speed_adc()

i2c_init( )

Syntax:	**i2c_init([stream],baud);**
Parameters:	**stream** – optional parameter specifying the stream defined in #USE I2C. baud – if baud is 0, I2C peripheral will be disable. If baud is 1, I2C peripheral is initialized and enabled with baud rate specified in #USE I2C directive. If baud is > 1 then I2C peripheral is initialized and enabled to specified baud rate.

Returns:	Nothing
Function:	To initialize I2C peripheral at run time to specified baud rate.
Availability:	All devices.
Requires:	#USE I2C

Examples:	#USE I2C(MASTER,I2C1, FAST,NOINIT)
	i2c_init(TRUE); //initialize and enable I2C peripheral to baud rate specified in //#USE I2C
	i2c_init(500000); //initialize and enable I2C peripheral to a baud rate of 500 //KBPS

Example Files:	None
Also See:	I2C_POLL( ), i2c_speed( ), I2C_SlaveAddr( ), I2C_ISR_STATE( ) ,I2C_WRITE( ), I2C_READ( ), _USE_I2C( ), I2C( )

i2c_isr_state( )

Syntax:	**state = i2c_isr_state();** **state = i2c_isr_state(**stream**);**
Parameters:	None
Returns:	state is an 8 bit int 0 - Address match received with R/W bit clear, perform i2c_read( ) to read the I2C address. 1-0x7F - Master has written data; i2c_read() will immediately return the data 0x80 - Address match received with R/W bit set; perform i2c_read( ) to read the I2C address, and use i2c_write( ) to pre-load the transmit buffer for the next transaction (next I2C read performed by master will read this byte). 0x81-0xFF - Transmission completed and acknowledged; respond with i2c_write() to pre-load the transmit buffer for the next transation (the next I2C read performed by master will read this byte).
Function:	Returns the state of I2C communications in I2C slave mode after an SSP interrupt. The return value increments with each byte received or sent. If 0x00 or 0x80 is returned, an i2C_read( ) needs to be performed to read the I2C address that was sent (it will match the address configured by #USE I2C so this value can be ignored)
Availability:	Devices with i2c hardware
Requires:	#USE I2C

Examples:	`#INT_SSP`
	`void i2c_isr() {`
	`state = i2c_isr_state();`
	`if(state== 0 ) i2c_read();`
	`i@c_read();`
	`if(state == 0x80)`
	`i2c_read(2);`
	`if(state >= 0x80)`
	`i2c_write(send_buffer[state - 0x80]);`
	`else if(state > 0)`
	`rcv_buffer[state - 1] = i2c_read();`

	`}`
Example Files:	ex_slave.c
Also See:	i2c_poll, i2c_speed, i2c_start, i2c_stop, i2c_slaveaddr, i2c_write, i2c_read, #USE I2C, I2C Overview

i2c_poll( )

Syntax:	**i2c_poll()** **i2c_poll(**stream**)**
Parameters:	**stream** (optional)- specify the stream defined in #USE I2C
Returns:	1 (TRUE) or 0 (FALSE)
Function:	The I2C_POLL() function should only be used when the built-in SSP is used. This function returns TRUE if the hardware has a received byte in the buffer. When a TRUE is returned, a call to I2C_READ() will immediately return the byte that was received.
Availability:	Devices with built in I2C
Requires:	#USE I2C
Examples:	`if(i2c-poll())` `buffer [index]=i2c-read();//read data`
Example Files:	None
Also See:	i2c_speed, i2c_start, i2c_stop, i2c_slaveaddr, i2c_isr_state, i2c_write, i2c_read, #USE I2C, I2C Overview

i2c_read( )

Syntax:	**data = i2c_read();** **data = i2c_read(ack);** **data = i2c_read(stream, ack);**
Parameters:	***ack*** -Optional, defaults to 1. 0 indicates do not ack. 1 indicates to ack. 2 slave only, indicates to not release clock at end of read. Use when i2c_isr_state () returns 0x80. **stream** - specify the stream defined in #USE I2C
Returns:	data - 8 bit int
Function:	Reads a byte over the I2C interface. In master mode this function will generate the clock and in slave mode it will wait for the clock. There is no timeout for the slave, use i2c_poll() to prevent a lockup. Use restart_wdt() in the #USE I2C to strobe the watch-dog timer in the slave mode while waiting.
Availability:	All devices.

Requires:	#USE I2C

Examples:	`i2c_start();`
	`i2c_write(0xa1);`
	`data1 = i2c_read(TRUE);`
	`data2 = i2c_read(FALSE);`
	`i2c_stop();`

Example Files:	ex_extee.c with 2416.c
Also See:	i2c_poll, i2c_speed, i2c_start, i2c_stop, i2c_slaveaddr, i2c_isr_state, i2c_write, #USE I2C, I2C Overview

i2c_slaveaddr( )

Syntax:	**I2C_SlaveAddr(**addr**);** **I2C_SlaveAddr(stream,** addr**);**
Parameters:	**addr** = 8 bit device address **stream**(optional) - specifies the stream used in #USE I2C
Returns:	Nothing
Function:	This functions sets the address for the I2C interface in slave mode.
Availability:	Devices with built in I2C
Requires:	#USE I2C
Examples:	`i2c_SlaveAddr(0x08);` `i2c_SlaveAddr(i2cStream1, 0x08);`
Example Files:	ex_slave.c
Also See:	i2c_poll, i2c_speed, i2c_start, i2c_stop, i2c_isr_state, i2c_write, i2c_read, #USE I2C, I2C Overview

i2c_speed( )

Syntax:	**i2c_speed (***baud***)** **i2c_speed** (stream**,** *baud***)**
Parameters:	**baud** is the number of bits per second. **stream** - specify the stream defined in #USE I2C
Returns:	Nothing.
Function:	This function changes the I2c bit rate at run time. This only works if the hardware I2C module is being used.
Availability:	All devices.
Requires:	#USE I2C

Examples:	`I2C_Speed (400000);`
Example Files:	none
Also See:	i2c_poll, i2c_start, i2c_stop, i2c_slaveaddr, i2c_isr_state, i2c_write, i2c_read, #USE I2C, I2C Overview

i2c_start( )

Syntax:	**i2c_start()** **i2c_start(**stream**)** **i2c_start(**stream**, restart)**
Parameters:	**stream: specify the stream defined in #USE I2C** **restart**: 2 – new restart is forced instead of start 1 – normal start is performed 0 (or not specified) – restart is done only if the compiler last encountered a I2C_START and no I2C_STOP
Returns:	undefined
Function:	Issues a start condition when in the I2C master mode. After the start condition the clock is held low until I2C_WRITE() is called. If another I2C_start is called in the same function before an i2c_stop is called, then a special restart condition is issued. Note that specific I2C protocol depends on the slave device. The I2C_START function will now accept an optional parameter. If 1 the compiler assumes the bus is in the stopped state. If 2 the compiler treats this I2C_START as a restart. If no parameter is passed a 2 is used only if the compiler compiled a I2C_START last with no I2C_STOP since.
Availability:	All devices.
Requires:	#USE I2C

Examples:	`i2c_start();`
	`i2c_write(0xa0);  // Device address`
	`i2c_write(address);  // Data to device`
	`i2c_start();  // Restart`
	`i2c_write(0xa1);  // to change data direction`
	`data=i2c_read(0);  // Now read from slave`
	`i2c_stop();`

Example Files:	ex_extee.c with 2416.c
Also See:	i2c_poll, i2c_speed, i2c_stop, i2c_slaveaddr, i2c_isr_state, i2c_write, i2c_read, #USE I2C, I2C Overview

i2c_stop( )

Syntax:	**i2c_stop()**

	i2c_stop(stream)
Parameters:	stream: (optional) specify stream defined in #USE I2C
Returns:	undefined
Function:	Issues a stop condition when in the I2C master mode.
Availability:	All devices.
Requires:	#USE I2C

Examples:	`i2c_start();  // Start condition`
	`i2c_write(0xa0); // Device address`
	`i2c_write(5);  // Device command`
	`i2c_write(12);  // Device data`
	`i2c_stop();  // Stop condition`

Example Files:	ex_extee.c with 2416.c
Also See:	i2c_poll, i2c_speed, i2c_start, i2c_slaveaddr, i2c_isr_state, i2c_write, i2c_read, #USE I2C, I2C Overview

i2c_write( )

Syntax:	**i2c_write (*data*)** **i2c_write (stream, *data*)**
Parameters:	***data*** is an 8 bit int **stream** - specify the stream defined in #USE I2C
Returns:	This function returns the ACK Bit. 0 means ACK, 1 means NO ACK, 2 means there was a collision if in Multi_Master Mode. This does not return an ACK if using i2c in slave mode.
Function:	Sends a single byte over the I2C interface. In master mode this function will generate a clock with the data and in slave mode it will wait for the clock from the master. No automatic timeout is provided in this function. This function returns the ACK bit. The LSB of the first write after a start determines the direction of data transfer (0 is master to slave). Note that specific I2C protocol depends on the slave device.
Availability:	All devices.
Requires:	#USE I2C

Examples:	`long cmd;`
	`  ...`
	`i2c_start();  // Start condition`
	`i2c_write(0xa0);// Device address`
	`i2c_write(cmd);// Low byte of command`
	`i2c_write(cmd>>8);// High byte of command`
	`i2c_stop();  // Stop condition`

Example Files:	ex_extee.c with 2416.c
Also See:	i2c_poll, i2c_speed, i2c_start, i2c_stop, i2c_slaveaddr, i2c_isr_state, i2c_read, #USE I2C, I2C Overview

input( )

Syntax:	**value = input (*pin*)**
Parameters:	***Pin*** to read. Pins are defined in the devices .h file. The actual value is a bit address. For example, port a (byte 5) bit 3 would have a value of 5*8+3 or 43 . This is defined as follows: #define PIN_A3 43 . The PIN could also be a variable. The variable must have a value equal to one of the constants (like PIN_A1) to work properly. The tristate register is updated unless the FAST_IO mode is set on port A. note that doing I/O with a variable instead of a constant will take much longer time.
Returns:	0 (or FALSE) if the pin is low, 1 (or TRUE) if the pin is high
Function:	This function returns the state of the indicated pin. The method of I/O is dependent on the last USE *_IO directive. By default with standard I/O before the input is done the data direction is set to input.
Availability:	All devices.
Requires:	Pin constants are defined in the devices .h file

Examples:	`while ( !input(PIN_B1) );`
	`// waits for B1 to go high`
	
	`if( input(PIN_A0) )`
	`  printf("A0 is now high\r\n");`
	
	`int16 i=PIN_B1;`
	`while(!i);`
	`//waits for B1 to go high`

Example Files:	ex_pulse.c
Also See:	input_x(), output_low(), output_high(), #USE FIXED_IO, #USE FAST_IO, #USE STANDARD_IO, General Purpose I/O

input_change_x( )

Syntax:	**value = input_change_a( );** **value = input_change_b( );** **value = input_change_c( );** **value = input_change_d( );** **value = input_change_e( );** **value = input_change_f( );** **value = input_change_g( );** **value = input_change_h( );** **value = input_change_j( );** **value = input_change_k( );**
Parameters:	None
Returns:	An 8-bit or 16-bit int representing the changes on the port.

Function:	This function reads the level of the pins on the port and compares them to the results the last time the input_change_x( ) function was called. A 1 is returned if the value has changed, 0 if the value is unchanged.
Availability:	All devices.
Requires:	None
Examples:	`pin_check = input_change_b( );`
Example Files:	None
Also See:	input( ), input_x( ), output_x( ), #USE FIXED_IO, #USE FAST_IO, #USE STANDARD_IO, General Purpose I/O

input_state( )

Syntax:	**value = input_state(*pin*)**
Parameters:	***pin*** to read. Pins are defined in the devices .h file. The actual value is a bit address. For example, port a (byte 5) bit 3 would have a value of 5*8+3 or 43 . This is defined as follows: #define PIN_A3 43 .
Returns:	Bit specifying whether pin is high or low. A 1 indicates the pin is high and a 0 indicates it is low.
Function:	This function reads the level of a pin without changing the direction of the pin as INPUT() does.
Availability:	All devices.
Requires:	Nothing
Examples:	`level = input_state(pin_A3);` `printf("level: %d",level);`
Example Files:	None
Also See:	input(), set_tris_x(), output_low(), output_high(), General Purpose I/O

input_x( )

Syntax:	**value = input_a()** **value = input_b()** **value = input_c()** **value = input_d()** **value = input_e()** **value = input_f()** **value = input_g()** **value = input_h()** **value = input_j()** **value = input_k()**
Parameters:	None
Returns:	An 8 bit int representing the port input data.
Function:	Inputs an entire byte from a port. The direction register is changed in accordance with the last specified #USE *_IO directive. By default with standard I/O before the input is done the data direction is set to input.
Availability:	All devices.
Requires:	Nothing
Examples:	`data = input_b();`
Example Files:	ex_psp.c
Also See:	input(), output_x(), #USE FIXED_IO, #USE FAST_IO, #USE STANDARD_IO

interrupt_active( )

Syntax:	**interrupt_active (**interrupt**)**
Parameters:	**Interrupt** – constant specifying the interrupt
Returns:	Boolean value
Function:	The function checks the interrupt flag of the specified interrupt and returns true in case the flag is set.
Availability:	Device with interrupts
Requires:	Should have a #INT_xxxx, Constants are defined in the devices .h file.
Examples:	`interrupt_active(INT_TIMER0);` `interrupt_active(INT_TIMER1);`
Example Files:	None
Also See:	disable_interrupts() , #INT , Interrupts Overview clear_interrupt, enable_interrupts()

isalnum(char)
isalpha(char)
iscntrl(x)
isdigit(char)
isgraph(x)
islower(char)
isspace(char)
isupper(char)
isxdigit(char)
isprint(x)
ispunct(x)

Syntax:

value = isalnum(*datac*)
value = isalpha(*datac*)
value = isdigit(*datac*)
value = islower(*datac*)
value = isspace(*datac*)
value = isupper(*datac*)
value = isxdigit(*datac*)
value = iscntrl(*datac*)
value = isgraph(*datac*)
value = isprint(*datac*)
value = punct(*datac*)

Parameters:

datac is a 8 bit character

Returns:

0 (or FALSE) if datac dose not match the criteria, 1 (or TRUE) if datac does match the criteria.

Function:

Tests a character to see if it meets specific criteria as follows:

isalnum(x)	**X is 0..9, 'A'..'Z', or 'a'..'z'**
isalpha(x)	X is 'A'..'Z' or 'a'..'z
isdigit(x)	X is '0'..'9'
islower(x)	X is 'a'..'z'
isupper(x)	X is 'A'..'Z
isspace(x)	X is a space
isxdigit(x)	X is '0'..'9', 'A'..'F', or 'a'..'f
iscntrl(x)	X is less than a space
isgraph(x)	X is greater than a space
isprint(x)	X is greater than or equal to a space
ispunct(x)	X is greater than a space and not a letter or number

Availability:

All devices.

Requires:

#INCLUDE <ctype.h>

Examples:

```
char id[20];
   ...
if(isalpha(id[0])) {
   valid_id=TRUE;
   for(i=1;i<strlen(id);i++)
    valid_id=valid_id && isalnum(id[i]);
} else
   valid_id=FALSE;
```

Example Files:	ex_str.c
Also See:	isamong()

isamong( )

Syntax:	**result = isamong (***value, cstring***)**
Parameters:	***value*** is a character ***cstring*** is a constant sting
Returns:	0 (or FALSE) if value is not in cstring 1 (or TRUE) if value is in cstring
Function:	Returns TRUE if a character is one of the characters in a constant string.
Availability:	All devices
Requires:	Nothing

Examples:	`char x= 'x';`
	`...`
	`if ( isamong ( x,`
	`  "0123456789ABCDEFGHIJKLMNOPQRSTUVWXYZ") )`
	`  printf ("The character is valid");`

Example Files:	#INCLUDE <ctype.h>
Also See:	isalnum( ), isalpha( ), isdigit( ), isspace( ), islower( ), isupper( ), isxdigit( )

itoa( )

Syntax:	string **= itoa(**i32value**,** i8base, string**)**
Parameters:	**i32value** is a 32 bit int **i8base** is a 8 bit int **string** is a pointer to a null terminated string of characters
Returns:	**string** is a pointer to a null terminated string of characters
Function:	Converts the signed int32 to a string according to the provided base and returns the converted value if any. If the result cannot be represented, the function will return 0.
Availability:	All devices
Requires:	#INCLUDE <stdlib.h>

Examples:	`int32 x=1234;`
	`char string[5];`
	
	`itoa(x,10, string);`
	`// string is now "1234"`

Example Files:	None
Also See:	None

jump_to_isr( )

Syntax:	**jump_to_isr (*address*)**
Parameters:	***address*** is a valid program memory address
Returns:	No value
Function:	The jump_to_isr function is used when the location of the interrupt service routines are not at the default location in program memory. When an interrupt occurs, program execution will jump to the default location and then jump to the specified address.
Availability:	All devices
Requires:	Nothing

Examples:	`int_global`
	`void global_isr(void) {`
	`  jump_to_isr(isr_address);`
	`}`

Example Files:	ex_bootloader.c
Also See:	#BUILD

kbhit( )

Syntax:	**value = kbhit()** **value = kbhit (*stream*)**
Parameters:	***stream*** is the stream id assigned to an available RS232 port. If the stream parameter is not included, the function uses the primary stream used by getc().
Returns:	0 (or FALSE) if getc() will need to wait for a character to come in, 1 (or TRUE) if a character is ready for getc()
Function:	If the RS232 is under software control this function returns TRUE if the start bit of a character is being sent on the RS232 RCV pin. If the RS232 is hardware this function returns TRUE if a character has been received and is waiting in the hardware buffer for getc() to read. This function may be used to poll for data without stopping and waiting for the data to appear. Note that in the case of software RS232 this function should be called at least 10 times the bit rate to ensure incoming data is not lost.
Availability:	All devices.
Requires:	#USE RS232
Examples:	`char timed_getc() {`

```
   long timeout;

   timeout_error=FALSE;
   timeout=0;
   while(!kbhit()&&(++timeout<50000)) // 1/2
                                      // second
          delay_us(10);
   if(kbhit())
          return(getc());
   else {
          timeout_error=TRUE;
          return(0);
   }
}
```

Example Files:	ex_tgetc.c
Also See:	getc(), #USE RS232, RS232 I/O Overview

label_address( )

Syntax:	**value = label_address(*label*);**
Parameters:	***label*** is a C label anywhere in the function
Returns:	A 16 bit int in PCB,PCM and a 32 bit int for PCH, PCD
Function:	This function obtains the address in ROM of the next instruction after the label. This is not a normally used function except in very special situations.
Availability:	All devices.
Requires:	Nothing

Examples:	`start:`
	`  a = (b+c)<<2;`
	`end:`
	`  printf("It takes %lu ROM locations.\r\n",`
	`  label_address(end)-label_address(start));`

Example Files:	setjmp.h
Also See:	goto_address()

labs( )

Syntax:	**result = labs (*value*)**
Parameters:	***value*** is a 16 bit signed long int
Returns:	A 16 bit signed long int
Function:	Computes the absolute value of a long integer.
Availability:	All devices.

Requires:	#INCLUDE <stdlib.h>
Examples:	`if(labs( target_value - actual_value ) > 500)` `  printf("Error is over 500 points\r\n");`
Example Files:	None
Also See:	abs()

lcd_contrast( )

Syntax:	**lcd_contrast (*contrast*)**
Parameters:	***contrast*** is used to set the internal contrast control resistance ladder.
Returns:	undefined.
Function:	This function controls the contrast of the LCD segments with a value passed in between 0 and 7. A value of 0 will produce the minimum contrast, 7 will produce the maximum contrast.
Availability:	Only on select devices with built-in LCD Driver Module hardware.
Requires:	None.

Examples:	`lcd_contrast( 0 );  // Minimum Contrast`
	`lcd_contrast( 7 );  // Maximum Contrast`

Example Files:	None.
Also See:	lcd_load( ), lcd_symbol( ), setup_lcd( ), Internal LCD Overview

lcd_load( )

Syntax:	**lcd_load (*buffer_pointer*, *offset*, *length*);**
Parameters:	***buffer_pointer*** points to the user data to send to the LCD, ***offset*** is the offset into the LCD segment memory to write the data, ***length*** is the number of bytes to transfer to the LCD segment memory.
Returns:	undefined.
Function:	This function will load ***length*** bytes from ***buffer_pointer*** into the LCD segment memory beginning at ***offset***. The lcd_symbol( ) function provides as easier way to write data to the segment memory.
Availability:	Only on devices with built-in LCD Driver Module hardware.
Requires	Constants are defined in the devices *.*h* file.
Examples:	`lcd_load(buffer, 0, 16);`

Example Files:	ex_92lcd.c
Also See:	lcd_symbol(), setup_lcd(), lcd_contrast( ), Internal LCD Overview

lcd_symbol( )

Syntax:	**lcd_symbol (***symbol, bX_addr***);**
Parameters:	***symbol*** is a 8 bit or 16 bit constant. ***bX_addr*** is a bit address representing the segment location to be used for bit X of the specified symbol. 1-16 segments could be specified.
Returns:	undefined
Function:	This function loads the bits for the symbol into the segment data registers for the LCD with each bit address specified. If bit X in symbol is set, the segment at bX_addr is set, otherwise it is cleared. The bX_addr is a bit address into the LCD RAM.
Availability:	Only on devices with built-in LCD Driver Module hardware.
Requires	Constants are defined in the devices *.h file.

Examples:	`byte CONST DIGIT_MAP[10] = {0xFC, 0x60, 0xDA, 0xF2, 0x66, 0xB6, 0xBE, 0xE0, 0xFE, 0xE6};`
	
	`#define DIGIT1  COM1+20, COM1+18, COM2+18, COM3+20, COM2+28, COM1+28, COM2+20, COM3+18`
	
	`for(i = 0; i <= 9; i++) {`
	`  lcd_symbol( DIGIT_MAP[i], DIGIT1 );`
	`  delay_ms( 1000 );`
	`}`

Example Files:	ex_92lcd.c
Also See:	setup_lcd(), lcd_load(), lcd_contrast( ), Internal LCD Overview

ldexp( )

Syntax:	**result= ldexp (***value***,** *exp***);**
Parameters:	***value*** is float ***exp*** is a signed int.
Returns:	result is a float with value result times 2 raised to power exp.
Function:	The ldexp function multiplies a floating-point number by an integral power of 2.
Availability:	All devices.
Requires:	#INCLUDE <math.h>

Examples:	`float result;`
	`result=ldexp(.5,0);`
	`// result is .5`

Example Files:	None
Also See:	frexp(), exp(), log(), log10(), modf()

log( )

Syntax:	**result = log (*value*)**
Parameters:	***value*** is a float
Returns:	A float
Function:	Computes the natural logarithm of the float x. If the argument is less than or equal to zero or too large, the behavior is undefined. Note on error handling: "errno.h" is included then the domain and range errors are stored in the errno variable. The user can check the errno to see if an error has occurred and print the error using the perror function. Domain error occurs in the following cases: • log: when the argument is negative
Availability:	All devices
Requires:	#INCLUDE <math.h>
Examples:	lnx = log(x);
Example Files:	None
Also See:	log10(), exp(), pow()

log10( )

Syntax:	**result = log10 (*value*)**
Parameters:	***value*** is a float
Returns:	A float
Function:	Computes the base-ten logarithm of the float x. If the argument is less than or equal to zero or too large, the behavior is undefined. Note on error handling: If "errno.h" is included then the domain and range errors are stored in the errno variable. The user can check the errno to see if an error has occurred and print the error using the perror function.

	Domain error occurs in the following cases: • log10: when the argument is negative
Availability:	All devices
Requires:	#INCLUDE <math.h>
Examples:	`db = log10( read_adc()*(5.0/255) )*10;`
Example Files:	None
Also See:	log(), exp(), pow()

longjmp( )

Syntax:	**longjmp (***env, val***)**
Parameters:	***env***: The data object that will be restored by this function ***val***: The value that the function setjmp will return. If val is 0 then the function setjmp will return 1 instead.
Returns:	After longjmp is completed, program execution continues as if the corresponding invocation of the setjmp function had just returned the value specified by val.
Function:	Performs the non-local transfer of control.
Availability:	All devices
Requires:	#INCLUDE <setjmp.h>
Examples:	`longjmp(jmpbuf, 1);`
Example Files:	None
Also See:	setjmp()

make8( )

Syntax:	**i8 = MAKE8(***var***, *offset*)**
Parameters:	***var*** is a 16 or 32 bit integer. ***offset*** is a byte offset of 0,1,2 or 3.
Returns:	An 8 bit integer
Function:	Extracts the byte at offset from var. Same as: i8 = (((var >> (offset*8)) & 0xff) except it is done with a single byte move.
Availability:	All devices
Requires:	Nothing

Examples:	`int32 x;`
	`int y;`
	
	`y = make8(x,3);  // Gets MSB of x`

Example Files:	None
Also See:	make16(), make32()

make16( )

Syntax:	**i16 = MAKE16(***varhigh***, *varlow*)**
Parameters:	***varhigh*** and ***varlow*** are 8 bit integers.
Returns:	A 16 bit integer
Function:	Makes a 16 bit number out of two 8 bit numbers. If either parameter is 16 or 32 bits only the lsb is used. Same as: i16 = (int16)(varhigh&0xff)*0x100+(varlow&0xff) except it is done with two byte moves.
Availability:	All devices
Requires:	Nothing

Examples:	`long x;`
	`int hi,lo;`
	
	`x = make16(hi,lo);`

Example Files:	ltc1298.c
Also See:	make8(), make32()

make32( )

Syntax:	**i32 = MAKE32(***var1***, *var2***, *var3***, *var4*)**
Parameters:	***var1-4*** are a 8 or 16 bit integers. ***var2-4*** are optional.
Returns:	A 32 bit integer
Function:	Makes a 32 bit number out of any combination of 8 and 16 bit numbers. Note that the number of parameters may be 1 to 4. The msb is first. If the total bits provided is less than 32 then zeros are added at the msb.
Availability:	All devices
Requires:	Nothing

Examples:	`int32 x;`
	`int y;`
	`long z;`

```
x = make32(1,2,3,4);  // x is 0x01020304

y=0x12;
z=0x4321;

x = make32(y,z);  // x is 0x00124321

x = make32(y,y,z);  // x is 0x12124321
```

Example Files:	ex_freqc.c
Also See:	make8(), make16()

malloc( )

Syntax:	**ptr=malloc(*size*)**
Parameters:	***size*** is an integer representing the number of byes to be allocated.
Returns:	A pointer to the allocated memory, if any. Returns null otherwise.
Function:	The malloc function allocates space for an object whose size is specified by size and whose value is indeterminate.
Availability:	All devices
Requires:	#INCLUDE <stdlibm.h>

Examples:	`int * iptr;`
	`iptr=malloc(10);`
	`// iptr will point to a block of memory of 10 bytes.`

Example Files:	None
Also See:	realloc(), free(), calloc()

memcpy( ) memmove( )

Syntax:	**memcpy (*destination*, *source*, *n*)** **memmove(*destination*, *source*, *n*)**
Parameters:	***destination*** is a pointer to the destination memory. ***source*** is a pointer to the source memory,. ***n*** is the number of bytes to transfer
Returns:	undefined
Function:	Copies n bytes from source to destination in RAM. Be aware that array names are pointers where other variable names and structure names are not (and therefore need a & before them). Memmove performs a safe copy (overlapping objects doesn't cause a problem). Copying takes place as if the n characters from the source are first copied into a temporary array of n characters that doesn't overlap the destination and source

	objects. Then the n characters from the temporary array are copied to destination.
Availability:	All devices
Requires:	Nothing

Examples:	`memcpy(&structA, &structB, sizeof (structA));`
	`memcpy(arrayA,arrayB,sizeof (arrayA));`
	`memcpy(&structA, &databyte, 1);`
	
	`char a[20]="hello";`
	`memmove(a,a+2,5);`
	`// a is now "llo"`

Example Files:	None
Also See:	strcpy(), memset()

memset( )

Syntax:	**memset (***destination***,** *value***,** *n***)**
Parameters:	***destination*** is a pointer to memory. ***value*** is a 8 bit int ***n*** is a 16 bit int. On PCB and PCM parts n can only be 1-255.
Returns:	undefined
Function:	Sets n number of bytes, starting at destination, to value. Be aware that array names are pointers where other variable names and structure names are not (and therefore need a & before them).
Availability:	All devices
Requires:	Nothing

Examples:	`memset(arrayA, 0, sizeof(arrayA));`
	`memset(arrayB, '?', sizeof(arrayB));`
	`memset(&structA, 0xFF, sizeof(structA));`

Example Files:	None
Also See:	memcpy()

modf( )

Syntax:	**result= modf (***value***, &** *integral***)**
Parameters:	***value*** is a float ***integral*** is a float

Returns:	result is a float
Function:	The modf function breaks the argument value into integral and fractional parts, each of which has the same sign as the argument. It stores the integral part as a float in the object integral.
Availability:	All devices
Requires:	#INCLUDE <math.h>

Examples:	`float result, integral;`
	`result=modf(123.987,&integral);`
	`// result is .987 and integral is 123.0000`

Example Files:	None
Also See:	None

_mul( )

Syntax:	**prod=_mul(***val1, val2***);**
Parameters:	***val1*** and ***val2*** are both 8-bit or 16-bit integers
Returns:	A 16-bit integer if both parameters are 8-bit integers, or a 32-bit integer if both parameters are 16-bit integers.
Function:	Performs an optimized multiplication. By accepting a different type than it returns, this function avoids the overhead of converting the parameters to a larger type.
Availability:	All devices
Requires:	Nothing

Examples:	`int a=50, b=100;`
	`long int c;`
	`c = _mul(a, b);  //c holds 5000`

Example Files:	None
Also See:	None

nargs( )

Syntax:	**void foo(char *** str**, int** count**, ...)**
Parameters:	The function can take variable parameters. The user can use stdarg library to create functions that take variable parameters.
Returns:	Function dependent.
Function:	The stdarg library allows the user to create functions that supports variable arguments. The function that will accept a variable number of arguments must have at least one

	actual, known parameters, and it may have more. The number of arguments is often passed to the function in one of its actual parameters. If the variable-length argument list can involve more that one type, the type information is generally passed as well. Before processing can begin, the function creates a special argument pointer of type va_list.
Availability:	All devices
Requires:	#INCLUDE <stdarg.h>
Examples:	

```
int foo(int num, ...)
{
 int sum = 0;
 int i;
 va_list argptr;  // create special argument pointer
 va_start(argptr,num);  // initialize argptr
 for(i=0; i<num; i++)
   sum = sum + va_arg(argptr, int);
 va_end(argptr);  // end variable processing
 return sum;
}

 void main()
{
 int total;
 total = foo(2,4,6,9,10,2);
}
```

Example Files:	None
Also See:	va_start( ) , va_end( ) , va_arg( )

offsetof( ) offsetofbit( )

Syntax:	**value = offsetof(***stype***,** *field***);** **value = offsetofbit(***stype***,** *field***);**
Parameters:	***stype*** is a structure type name. ***Field*** is a field from the above structure
Returns:	An 8 bit byte
Function:	These functions return an offset into a structure for the indicated field. offsetof returns the offset in bytes and offsetofbit returns the offset in bits.
Availability:	All devices
Requires:	#INCLUDE <stddef.h>
Examples:	

```
struct  time_structure {
          int hour, min, sec;
          int zone : 4;
          intl daylight_savings;
}

x = offsetof(time_structure, sec);
          // x will be 2
x = offsetofbit(time_structure, sec);
          // x will be 16
```

```
x = offsetof (time_structure,
              daylight_savings);
          // x will be 3
x = offsetofbit(time_structure,
                daylight_savings);
          // x will be 28
```

Example Files:	None
Also See:	None

output_x( )

Syntax:	**output_a (*value*)** **output_b (*value*)** **output_c (*value*)** **output_d (*value*)** **output_e (*value*)** **output_f (*value*)** **output_g (*value*)** **output_h (*value*)** **output_j (*value*)** **output_k (*value*)**
Parameters:	***value*** is a 8 bit int
Returns:	undefined
Function:	Output an entire byte to a port. The direction register is changed in accordance with the last specified #USE *_IO directive.
Availability:	All devices, however not all devices have all ports (A-E)
Requires:	Nothing
Examples:	`OUTPUT_B(0xf0);`
Example Files:	ex_patg.c
Also See:	input(), output_low(), output_high(), output_float(), output_bit(), #USE FIXED_IO, #USE FAST_IO, #USE STANDARD_IO, General Purpose I/O

output_bit( )

Syntax:	**output_bit (*pin*, *value*)**
Parameters:	***Pins*** are defined in the devices .h file. The actual number is a bit address. For example, port a (byte 5) bit 3 would have a value of 5*8+3 or 43 . This is defined as follows: #define PIN_A3 43 . The PIN could also be a variable. The variable must have a value equal to one of the constants (like PIN_A1) to work properly. The tristate register is updated unless the FAST_IO mode is set on port A. Note that doing I/O with a variable instead of a constant will take much longer time. ***Value*** is a 1 or a 0.

Returns:	undefined
Function:	Outputs the specified value (0 or 1) to the specified I/O pin. The method of setting the direction register is determined by the last #USE *_IO directive.
Availability:	All devices.
Requires:	Pin constants are defined in the devices .h file

Examples:	`output_bit( PIN_B0, 0);`
	`// Same as output_low(pin_B0);`
	
	`output_bit( PIN_B0,input( PIN_B1 ) );`
	`// Make pin B0 the same as B1`
	
	`output_bit( PIN_B0,shift_left(&data,1,input(PIN_B1)));`
	`// Output the MSB of data to`
	`// B0 and at the same time`
	`// shift B1 into the LSB of data`
	
	`int16 i=PIN_B0;`
	`ouput_bit(i,shift_left(&data,1,input(PIN_B1)));`
	`//same as above example, but`
	`//uses a variable instead of a constant`

Example Files:	ex_extee.c with 9356.c
Also See:	input(), output_low(), output_high(), output_float(), output_x(), #USE FIXED_IO, #USE FAST_IO, #USE STANDARD_IO, General Purpose I/O

output_drive( )

Syntax:	**output_drive(pin)**
Parameters:	***Pins*** are defined in the devices .h file. The actual value is a bit address. For example, port a (byte 5) bit 3 would have a value of 5*8+3 or 43 . This is defined as follows: #DEFINE PIN_A3 43 .
Returns:	undefined
Function:	Sets the specified pin to the output mode.
Availability:	All devices.
Requires:	Pin constants are defined in the devices.h file.

Examples:	`output_drive(pin_A0);  // sets pin_A0 to output its value`
	`output_bit(pin_B0, input(pin_A0))  // makes B0 the same as A0`

Example Files:	None
Also See:	input(), output_low(), output_high(), output_bit(), output_x(), output_float()

.

output_float( )

Syntax:	**output_float (*pin*)**
Parameters:	***Pins*** are defined in the devices .h file. The actual value is a bit address. For example, port a (byte 5) bit 3 would have a value of 5*8+3 or 43 . This is defined as follows: #DEFINE PIN_A3 43 . The PIN could also be a variable to identify the pin. The variable must have a value equal to one of the constants (like PIN_A1) to work properly. Note that doing I/O with a variable instead of a constant will take much longer time.
Returns:	undefined
Function:	Sets the specified pin to the input mode. This will allow the pin to float high to represent a high on an open collector type of connection.
Availability:	All devices.
Requires:	Pin constants are defined in the devices .h file

Examples:	`if( (data & 0x80)==0 )`
	`  output_low(pin_A0);`
	`else`
	`  output_float(pin_A0);`

Example Files:	None
Also See:	input(), output_low(), output_high(), output_bit(), output_x(), output_drive(), #USE FIXED_IO, #USE FAST_IO, #USE STANDARD_IO, General Purpose I/O

output_high( )

Syntax:	**output_high (*pin*)**
Parameters:	***Pin*** to write to. Pins are defined in the devices .h file. The actual value is a bit address. For example, port a (byte 5) bit 3 would have a value of 5*8+3 or 43 . This is defined as follows: #DEFINE PIN_A3 43 . The PIN could also be a variable. The variable must have a value equal to one of the constants (like PIN_A1) to work properly. The tristate register is updated unless the FAST_IO mode is set on port A. Note that doing I/O with a variable instead of a constant will take much longer time.
Returns:	undefined
Function:	Sets a given pin to the high state. The method of I/O used is dependent on the last USE *_IO directive.
Availability:	All devices.
Requires:	Pin constants are defined in the devices .h file

Examples:	`output_high(PIN_A0);`
	
	`Int16 i=PIN_A1;`
	`output_low(PIN_A1);`

Example Files:	ex_sqw.c

Also See:	input(), output_low(), output_float(), output_bit(), output_x(), #USE FIXED_IO, #USE FAST_IO, #USE STANDARD_IO, General Purpose I/O

output_low( )

Syntax:	**output_low (*pin*)**
Parameters:	***Pins*** are defined in the devices .h file. The actual value is a bit address. For example, port a (byte 5) bit 3 would have a value of 5*8+3 or 43 . This is defined as follows: #DEFINE PIN_A3 43 . The PIN could also be a variable. The variable must have a value equal to one of the constants (like PIN_A1) to work properly. The tristate register is updated unless the FAST_IO mode is set on port A. Note that doing I/O with a variable instead of a constant will take much longer time.
Returns:	undefined
Function:	Sets a given pin to the ground state. The method of I/O used is dependent on the last USE *_IO directive.
Availability:	All devices.
Requires:	Pin constants are defined in the devices .h file

Examples:	`output_low(PIN_A0);`
	
	`Int16i=PIN_A1;`
	`output_low(PIN_A1);`

Example Files:	ex_sqw.c
Also See:	input(), output_high(), output_float(), output_bit(), output_x(), #USE FIXED_IO, #USE FAST_IO, #USE STANDARD_IO, General Purpose I/O

output_toggle( )

Syntax:	**output_toggle(*pin*)**
Parameters:	**Pins** are defined in the devices .h file. The actual value is a bit address. For example, port a (byte 5) bit 3 would have a value of 5*8+3 or 43 . This is defined as follows: #DEFINE PIN_A3 43 .
Returns:	Undefined
Function:	Toggles the high/low state of the specified pin.
Availability:	All devices.
Requires:	Pin constants are defined in the devices .h file
Examples:	`output_toggle(PIN_B4);`
Example Files:	None

Also See:	Input(), output_high(), output_low(), output_bit(), output_x()

perror( )

Syntax:	**perror(*string*);**
Parameters:	***string*** is a constant string or array of characters (null terminated).
Returns:	Nothing
Function:	This function prints out to STDERR the supplied string and a description of the last system error (usually a math error).
Availability:	All devices.
Requires:	#USE RS232, #INCLUDE <errno.h>

Examples:	`x = sin(y);`
	
	`if(errno!=0)`
	`  perror("Problem in find_area");`

Example Files:	None
Also See:	RS232 I/O Overview

pid_busy( )

Syntax:	**result = pid_busy();**
Parameters:	None
Returns:	TRUE if PID module is busy or FALSE is PID module is not busy.
Function:	To check if the PID module is busy with a calculation.
Availability:	All devices with a PID module.
Requires:	Nothing

Examples:	`pid__get_result(PID_START_ONLY, ADCResult);`
	`while(pid_busy());`
	`pid_get_result(PID_READ_ONLY, &PIDResult);`

Example Files:	None
Also See:	setup_pid(), pid_write(), pid_get_result(), pid_read()

pid_get_result( )

Syntax:	**pid_get_result(**set_point, input, &output**);** **//Start and Read** **pid_get_result(**mode, set_point, input**);** **//Start Only** **pid_get_result(**mode, &output**)** **//Read Only** **pid_get_result(**mode, set_point, input, &output**);**
Parameters:	**mode**- constant parameter specifying whether to only start the calculation, only read the result, or start the calculation and read the result. The options are defined in the device's header file as: · PID_START_READ · PID_READ_ONLY · PID_START_ONLY **set_point** -a 16-bit variable or constant representing the set point of the control system, the value the input from the control system is compared against to determine the error in the system. **input** - a 16-bit variable or constant representing the input from the control system. **output** - a structure that the output of the PID module will be saved to. Either pass the address of the structure as the parameter, or a pointer to the structure as the parameter.
Returns:	Nothing
Function:	To pass the set point and input from the control system to the PID module, start the PID calculation and get the result of the PID calculation. The PID calculation starts, automatically when the input is written to the PID module's input registers.
Availability:	All devices with a PID module.
Requires:	Constants are defined in the device's .h file.

Examples:	`pid_get_result(SetPoint, ADCResult, &PIDOutput);` `//Start and Read`
	`pid_get_result(PID_START_ONLY, SetPoint, ADCResult);` `//Start Only`
	`pid_get_result(PID_READ_ONLY, &PIDResult);` `//Read Only`

Example Files:	None
Also See:	setup_pid(), pid_read(), pid_write(), pid_busy()

pid_read( )

Syntax:	**pid_read(**register, &output**);**
Parameters:	**register**- constant specifying which PID registers to read. The registers that can be written are defined in the device's header file as: · PID_ADDR_ACCUMULATOR

	· PID_ADDR_OUTPUT · PID_ADDR_Z1 · PID_ADDR_Z2 · PID_ADDR_K1 · PID_ADDR_K2 · PID_ADDR_K3 **output** -a 16-bit variable, 32-bit variable or structure that specified PID registers value will be saved to. The size depends on the registers that are being read. Either pass the address of the variable or structure as the parameter, or a pointer to the variable or structure as the parameter.
Returns:	Nothing
Function:	To read the current value of the Accumulator, Output, Z1, Z2, Set Point, K1, K2 or K3 PID registers. If the PID is busy with a calculation the function will wait for module to finish calculation before reading the specified register.
Availability:	All devices with a PID module.
Requires:	Constants are defined in the device's .h file.
Examples:	`pid_read(PID_ADDR_Z1, &value_z1);`
Example Files:	None
Also See:	setup_pid(), pid_write(), pid_get_result(), pid_busy()

pid_write( )

Syntax:	**pid_write(**register, &input**);**
Parameters:	**register**- constant specifying which PID registers to write. The registers that can be written are defined in the device's header file as: · PID_ADDR_ACCUMULATOR · PID_ADDR_OUTPUT · PID_ADDR_Z1 · PID_ADDR_Z2 · PID_ADDR_Z3 · PID_ADDR_K1 · PID_ADDR_K2 · PID_ADDR_K3 **input** -a 16-bit variable, 32-bit variable or structure that contains the data to be written. The size depends on the registers that are being written. Either pass the address of the variable or structure as the parameter, or a pointer to the variable or structure as the parameter.
Returns:	Nothing

Function:	To write a new value for the Accumulator, Output, Z1, Z2, Set Point, K1, K2 or K3 PID registers. If the PID is busy with a calculation the function will wait for module to finish the calculation before writing the specified register.
Availability:	All devices with a PID module.
Requires:	Constants are defined in the device's .h file.
Examples:	`pid_write(PID_ADDR_Z1, &value_z1);`
Example Files:	None
Also See:	setup_pid(), pid_read(), pid_get_result(), pid_busy()

port_x_pullups ( )

Syntax:	**port_a_pullups (***value***)** **port_b_pullups (***value***)** **port_d_pullups (***value***)** **port_e_pullups (***value***)** **port_j_pullups (***value***)** **port_x_pullups (***upmask***)** **port_x_pullups (***upmask***, *downmask*)**
Parameters:	***value*** is TRUE or FALSE on most parts, some parts that allow pullups to be specified on individual pins permit an 8 bit int here, one bit for each port pin. ***upmask*** for ports that permit pullups to be specified on a pin basis. This mask indicates what pins should have pullups activated. A 1 indicates the pullups is on. ***downmask*** for ports that permit pulldowns to be specified on a pin basis. This mask indicates what pins should have pulldowns activated. A 1 indicates the pulldowns is on.
Returns:	undefined
Function:	Sets the input pullups. TRUE will activate, and a FALSE will deactivate.
Availability:	Only 14 and 16 bit devices (PCM and PCH). (Note: use SETUP_COUNTERS on PCB parts).
Requires:	Nothing
Examples:	`port_a_pullups(FALSE);`
Example Files:	ex_lcdkb.c, kbd.c
Also See:	input(), input_x(), output_float()

pow( ) pwr( )

Syntax:	**f = pow (*x*,*y*)** **f = pwr (*x*,*y*)**
Parameters:	***x*** and ***y*** are of type float
Returns:	A float
Function:	Calculates X to the Y power. Note on error handling: If "errno.h" is included then the domain and range errors are stored in the errno variable. The user can check the errno to see if an error has occurred and print the error using the perror function. Range error occurs in the following case: • pow: when the argument X is negative
Availability:	All Devices
Requires:	#INCLUDE <math.h>
Examples:	`area = pow (size,3.0);`
Example Files:	None
Also See:	None

printf( ) fprintf( )

Syntax:	**printf (*string*)** **or** **printf (*cstring*, *values*...)** **or** **printf (*fname*, *cstring*, *values*...)** **fprintf (*stream*, *cstring*, *values*...)**
Parameters:	***String*** is a constant string or an array of characters null terminated. ***Values*** is a list of variables separated by commas, fname is a function name to be used for outputting (default is putc is none is specified. ***Stream*** is a stream identifier (a constant byte). Note that format specifies do not work in ram band strings.
Returns:	undefined
Function:	Outputs a string of characters to either the standard RS-232 pins (first two forms) or to a specified function. Formatting is in accordance with the string argument. When variables are used this string must be a constant. The % character is used within the string to indicate a variable value is to be formatted and output. Longs in the printf may be 16 or 32 bit. A %% will output a single %. Formatting rules for the % follows. See the Expressions > Constants and Trigraph sections of this manual for other escape character that may be part of the string.

If fprintf() is used then the specified stream is used where printf() defaults to STDOUT (the last USE RS232).

Format:
The format takes the generic form %nt. n is optional and may be 1-9 to specify how many characters are to be outputted, or 01-09 to indicate leading zeros, or 1.1 to 9.9 for floating point and %w output. t is the type and may be one of the following:

c	Character
s	String or character
u	Unsigned int
d	Signed int
Lu	Long unsigned int
Ld	Long signed int
x	Hex int (lower case)
X	Hex int (upper case)
Lx	Hex long int (lower case)
LX	Hex long int (upper case)
f	Float with truncated decimal
g	Float with rounded decimal
e	Float in exponential format
w	Unsigned int with decimal place inserted. Specify two numbers for n. The first is a total field width. The second is the desired number of decimal places.

Example formats:

Specifier	Value=0x12	Value=0xfe
%03u	018	254
%u	18	254
%2u	18	*
%5	18	254
%d	18	-2
%x	12	fe
%X	12	FE
%4X	0012	00FE
%3.1w	1.8	25.4

* Result is undefined - Assume garbage.

Availability: All Devices

Requires: #USE RS232 (unless fname is used)

Examples:

```
byte  x,y,z;
printf("HiThere");
printf("RTCCValue=>%2x\n\r",get_rtcc());
printf("%2u %X %4X\n\r",x,y,z);
printf(LCD_PUTC, "n=%u",n);
```

Example Files: ex_admm.c, ex_lcdkb.c

Also See: atoi(), puts(), putc(), getc() (for a stream example), RS232 I/O Overview

profileout()

Syntax: **profileout(string);**
profileout(string, value);

	profileout(value);
Parameters:	string is any constant string, and value can be any constant or variable integer. Despite the length of string the user specifies here, the code profile run-time will actually only send a one or two byte identifier tag to the code profile tool to keep transmission and execution time to a minimum.
Returns:	Undefined
Function:	Typically the code profiler will log and display function entry and exits, to show the call sequence and profile the execution time of the functions. By using profileout(), the user can add any message or display any variable in the code profile tool. Most messages sent by profileout() are displayed in the 'Data Messages' and 'Call Sequence' screens of the code profile tool. If a profileout(string) is used and the first word of string is "START", the code profile tool will then measure the time it takes until it sees the same profileout(string) where the "START" is replaced with "STOP". This measurement is then displayed in the 'Statistics' screen of the code profile tool, using string as the name (without "START" or "STOP")
Availability:	Any device.
Requires:	**#use profile()** used somewhere in the project source code.

Examples:	// send a simple string.
	profileout("This is a text string");
	// send a variable with a string identifier.
	profileout("RemoteSensor=", adc);
	// just send a variable.
	profileout(adc);
	// time how long a block of code takes to execute.
	// this will be displayed in the 'Statistics' of the
	// Code Profile tool.
	profileout("start my algorithm");
	/* code goes here */
	profileout("stop my algorithm");

Example Files:	ex_profile.c
Also See:	#use profile(), #profile, Code Profile overview

psp_output_full( ) psp_input_full( ) psp_overflow( )

Syntax:	**result = psp_output_full()** **result = psp_input_full()** **result = psp_overflow()** **result = psp_error();** **//EPMP only** **result = psp_timeout();** **//EPMP only**
Parameters:	None
Returns:	A 0 (FALSE) or 1 (TRUE)
Function:	These functions check the Parallel Slave Port (PSP) for the indicated conditions and

	return TRUE or FALSE.
Availability:	This function is only available on devices with PSP hardware on chips.
Requires:	Nothing

Examples:	`while (psp_output_full()) ;`
	`psp_data = command;`
	`while(!psp_input_full()) ;`
	`if ( psp_overflow() )`
	`  error = TRUE;`
	`else`
	`  data = psp_data;`

Example Files:	ex_psp.c
Also See:	setup_psp(), PSP Overview

putc( ) putchar( ) fputc( )

Syntax:	**putc (***cdata***)** **putchar (***cdata***)** **fputc(***cdata***,** *stream***)**
Parameters:	***cdata*** is a 8 bit character. ***Stream*** is a stream identifier (a constant byte)
Returns:	undefined
Function:	This function sends a character over the RS232 XMIT pin. A #USE RS232 must appear before this call to determine the baud rate and pin used. The #USE RS232 remains in effect until another is encountered in the file. If fputc() is used then the specified stream is used where putc() defaults to STDOUT (the last USE RS232).
Availability:	All devices
Requires:	#USE RS232

Examples:	`putc('*');`
	`for(i=0; i<10; i++)`
	`  putc(buffer[i]);`
	`putc(13);`

Example Files:	ex_tgetc.c
Also See:	getc(), printf(), #USE RS232, RS232 I/O Overview

putc_send( );

fputc_send( );

Syntax:	**putc_send();** **fputc_send(**stream**);**
Parameters:	**stream** – parameter specifying the stream defined in #USE RS232.
Returns:	Nothing
Function:	Function used to transmit bytes loaded in transmit buffer over RS232. Depending on the options used in #USE RS232 controls if function is available and how it works. If using hardware UARTx with NOTXISR option it will check if currently transmitting. If not transmitting it will then check for data in transmit buffer. If there is data in transmit buffer it will load next byte from transmit buffer into the hardware TX buffer, unless using CTS flow control option. In that case it will first check to see if CTS line is at its active state before loading next byte from transmit buffer into the hardware TX buffer. If using hardware UARTx with TXISR option, function only available if using CTS flow control option, it will test to see if the TBEx interrupt is enabled. If not enabled it will then test for data in transmit buffer to send. If there is data to send it will then test the CTS flow control line and if at its active state it will enable the TBEx interrupt. When using the TXISR mode the TBEx interrupt takes care off moving data from the transmit buffer into the hardware TX buffer. If using software RS232, only useful if using CTS flow control, it will check if there is data in transmit buffer to send. If there is data it will then check the CTS flow control line, and if at its active state it will clock out the next data byte.
Availability:	All devices
Requires:	#USE RS232

Examples:	#USE_RS232(UART1,BAUD=9600,TRANSMIT_BUFFER=50,NOTXISR)
	printf("Testing Transmit Buffer");
	while(TRUE){
	putc_send();
	}

Example Files:	None
Also See:	_USE_RS232( ), RCV_BUFFER_FULL( ), TX_BUFFER_FULL( ), TX_BUFFER_BYTES( ), GET( ), PUTC( ) RINTF( ), SETUP_UART( ), PUTC( )_SEND

puts( ) fputs( )

Syntax:	**puts (***string***).** **fputs (***string***,** *stream***)**
Parameters:	***string*** is a constant string or a character array (null-terminated). ***Stream*** is a stream identifier (a constant byte)
Returns:	undefined

Function:	Sends each character in the string out the RS232 pin using putc(). After the string is sent a CARRIAGE-RETURN (13) and LINE-FEED (10) are sent. In general printf() is more useful than puts(). If fputs() is used then the specified stream is used where puts() defaults to STDOUT (the last USE RS232)
Availability:	All devices
Requires:	#USE RS232

Examples:	`puts( " ----------- " );`
	`puts( " |  HI  | " );`
	`puts( " ----------- " );`

Example Files:	None
Also See:	printf(), gets(), RS232 I/O Overview

pwm_off()

Syntax:	**pwm_off([stream]);**
Parameters:	**stream** – optional parameter specifying the stream defined in #USE PWM.
Returns:	Nothing.
Function:	To turn off the PWM signal.
Availability:	All devices.
Requires:	#USE PWM

Examples:	`#USE PWM(OUTPUT=PIN_C2, FREQUENCY=10kHz, DUTY=25)`
	`while(TRUE){`
	`  if(kbhit()){`
	`  c = getc();`
	
	`  if(c=='F')`
	`  pwm_off();`
	`  }`
	`}`

Example Files:	None
Also See:	#use_pwm, pwm_on(), pwm_set_duty_percent(), pwm_set_duty(), pwm_set_frequency()

pwm_on()

Syntax:	**pwm_on([stream]);**

Parameters:	**stream** – optional parameter specifying the stream defined in #USE PWM.
Returns:	Nothing.
Function:	To turn on the PWM signal.
Availability:	All devices.
Requires:	#USE PWM

Examples:	`#USE PWM(OUTPUT=PIN_C2, FREQUENCY=10kHz, DUTY=25)`
	`while(TRUE){`
	`  if(kbhit()){`
	`  c = getc();`
	`  if(c=='O')`
	`  pwm_on();`
	`  }`
	`}`

Example Files:	None
Also See:	#use_pwm, pwm_off(), pwm_set_duty_percent(), pwm_set_duty, pwm_set_frequency()

pwm_set_duty()

Syntax:	**pwm_set_duty([**stream**],**duty**);**
Parameters:	**stream** – optional parameter specifying the stream defined in #USE PWM. **duty** – an int16 constant or variable specifying the new PWM high time.
Returns:	Nothing.
Function:	To change the duty cycle of the PWM signal. The duty cycle percentage depends on the period of the PWM signal. This function is faster than pwm_set_duty_percent(), but requires you to know what the period of the PWM signal is.
Availability:	All devices.
Requires:	#USE PWM
Examples:	`#USE PWM(OUTPUT=PIN_C2, FREQUENCY=10kHz, DUTY=25)`
Example Files:	None
Also See:	#use_pwm, pwm_on, pwm_off(), pwm_set_frequency(), pwm_set_duty_percent()

pwm_set_duty_percent

Syntax:	**pwm_set_duty_percent([stream]), percent**

Parameters:	stream – optional parameter specifying the stream defined in #USE PWM. percent- an int16 constant or variable ranging from 0 to 1000 specifying the new PWM duty cycle, D is 0% and 1000 is 100.0%.
Returns:	Nothing.
Function:	To change the duty cycle of the PWM signal. Duty cycle percentage is based off the current frequency/period of the PWM signal.
Availability:	All devices.
Requires:	#USE PWM
Examples:	`#USE PWM(OUTPUT=PIN_C2, FREQUENCY=10kHz, DUTY=25)` `pwm_set_duty_percent(500);  //set PWM duty cycle to 50%`
Example Files:	None
Also See:	#use_pwm, pwm_on(), pwm_off(), pwm_set_frequency(), pwm_set_duty()

pwm_set_frequency

Syntax:	**pwm_set_frequency([stream],frequency);**

Parameters:	**stream** – optional parameter specifying the stream defined in #USE PWM. **frequency** – an int32 constant or variable specifying the new PWM frequency.
Returns:	Nothing.
Function:	To change the frequency of the PWM signal. Warning this may change the resolution of the PWM signal.
Availability:	All devices.
Requires:	#USE PWM
Examples:	`#USE PWM(OUTPUT=PIN_C2, FREQUENCY=10kHz, DUTY=25)` `pwm_set_frequency(1000);  //set PWM frequency to 1kHz`
Example Files:	None
Also See:	#use_pwm, pwm_on(), pwm_off(), pwm_set_duty_percent, pwm_set_duty()

qei_get_count( )

Syntax:	**value = qei_get_count([*type*]);**
Parameters:	***type*** - Optional parameter to specify which counter to get, defaults to position counter. Defined in devices .h file as: QEI_GET_POSITION_COUNT QEI_GET_VELOCITY_COUNT
Returns:	The 16-bit value of the position counter or velocity counter.
Function:	Reads the current 16-bit value of the position or velocity counter.
Availability:	Devices that have the QEI module.
Requires:	Nothing.

Examples:	`value = qei_get_counter(QEI_GET_POSITION_COUNT);`
	`value = qei_get_counter();`
	`value = qei_get_counter(QEI_GET_VELOCITY_COUNT);`

Example Files:	None
Also See:	setup_qei() , qei_set_count() , qei_status().

qei_set_count( )

Syntax:	**qei_set_count(** *value* **);**
Parameters:	***value***- The 16-bit value of the position counter.
Returns:	void
Function:	Write a 16-bit value to the position counter.
Availability:	Devices that have the QEI module.
Requires:	Nothing.
Examples:	`qei_set_counter(value);`
Example Files:	None
Also See:	setup_qei() , qei_get_count() , qei_status().

qei_status( )

Syntax:	**status = qei_status( );**

Parameters:	None
Returns:	The status of the QEI module.
Function:	Returns the status of the QEI module.
Availability:	Devices that have the QEI module.
Requires:	Nothing.
Examples:	`status = qei_status();`
Example Files:	None
Also See:	setup_qei() , qei_set_count() , qei_get_count().

qsort( )

Syntax:	**qsort (***base, num, width, compare***)**
Parameters:	**base**: Pointer to array of sort data **num**: Number of elements **width**: Width of elements **compare**: Function that compares two elements
Returns:	None
Function:	Performs the shell-metzner sort (not the quick sort algorithm). The contents of the array are sorted into ascending order according to a comparison function pointed to by compare.
Availability:	All devices
Requires:	#INCLUDE <stdlib.h>

Examples:

```
int nums[5]={ 2,3,1,5,4};
int compar(void *arg1,void *arg2);

void main()  {
   qsort ( nums, 5, sizeof(int), compar);
}

int compar(void *arg1,void *arg2)  {
   if ( * (int *) arg1 < ( * (int *) arg2) return -1
   else if ( * (int *) arg1 == ( * (int *) arg2) return 0
   else return 1;
}
```

Example Files:	ex_qsort.c
Also See:	bsearch()

rand( )

Syntax:	**re=rand()**
Parameters:	None
Returns:	A pseudo-random integer.
Function:	The rand function returns a sequence of pseudo-random integers in the range of 0 to RAND_MAX.
Availability:	All devices
Requires:	#INCLUDE <STDLIB.H>
Examples:	`int I;` `I=rand();`
Example Files:	None
Also See:	srand()

rcv_buffer_bytes( )

Syntax:	**value = rcv_buffer_bytes([**stream**]);**
Parameters:	stream – optional parameter specifying the stream defined in #USE RS232.
Returns:	Number of bytes in receive buffer that still need to be retrieved.
Function:	Function to determine the number of bytes in receive buffer that still need to be retrieved.
Availability:	All devices
Requires:	#USE RS232

Examples:	#USE_RS232(UART1,BAUD=9600,RECEIVE_BUFFER=100)
	void main(void) {
	  char c;
	  if(rcv_buffer_bytes() > 10)
	  c = getc();
	}

Example Files:	None

rcv_buffer_full( )

Syntax:	**value = rcv_buffer_full([stream]);**
Parameters:	stream – optional parameter specifying the stream defined in #USE RS232.
Returns:	TRUE if receive buffer is full, FALSE otherwise.
Function:	Function to test if the receive buffer is full.
Availability:	All devices
Requires:	#USE RS232

Examples:	#USE_RS232(UART1,BAUD=9600,RECEIVE_BUFFER=100)
	void main(void) {
	  char c;
	  if(rcv_buffer_full())
	  c = getc();
	}

Example Files:	None
Also See:	_USE_RS232( ),RCV_BUFFER_BYTES( ), TX_BUFFER_BYTES( ) ,TX_BUFFER_FULL( ), GETC( ), PUTC( ), PRINTF( ), SETUP_UART( ), PUTC_SEND( )

read_adc( )

Syntax:	**value = read_adc ([*mode*])**
Parameters:	***mode*** is an optional parameter. If used the values may be: ADC_START_AND_READ (continually takes readings, this is the default) ADC_START_ONLY (starts the conversion and returns) ADC_READ_ONLY (reads last conversion result)
Returns:	Either a 8 or 16 bit int depending on #DEVICE ADC= directive.
Function:	This function will read the digital value from the analog to digital converter. Calls to setup_adc(), setup_adc_ports() and set_adc_channel() should be made sometime before this function is called. The range of the return value depends on number of bits in the chips A/D converter and the setting in the #DEVICE ADC= directive as follows:

#DEVICE	8 bit	10 bit	11 bit	12 bit	16 bit
ADC=8	00-FF	00-FF	00-FF	00-FF	00-FF
ADC=10	x	0-3FF	x	0-3FF	x
ADC=11	x	x	0-7FF	x	x
ADC=16	0FF00	0-FFC0	0-FFEO	0-FFF0	0-FFFF

Note: x is not defined

Availability:	This function is only available on devices with A/D hardware.
Requires:	Pin constants are defined in the devices .h file.

Examples:	`setup_adc( ADC_CLOCK_INTERNAL );`
	`setup_adc_ports( ALL_ANALOG );`
	`set_adc_channel(1);`
	`while ( input(PIN_B0) ) {`
	`  delay_ms( 5000 );`
	`  value = read_adc();`
	`  printf("A/D value = %2x\n\r", value);`
	`}`

```
read_adc(ADC_START_ONLY);
sleep();
value=read_adc(ADC_READ_ONLY);
```

Example Files:	ex_admm.c, ex_14kad.c
Also See:	setup_adc(), set_adc_channel(), setup_adc_ports(), #DEVICE, ADC Overview

read_bank( )

Syntax:	**value = read_bank (*bank*, *offset*)**
Parameters:	***bank*** is the physical RAM bank 1-3 (depending on the device) ***offset*** is the offset into user RAM for that bank (starts at 0),
Returns:	8 bit int
Function:	Read a data byte from the user RAM area of the specified memory bank. This function may be used on some devices where full RAM access by auto variables is not efficient. For example, setting the pointer size to 5 bits on the PIC16C57 chip will generate the most efficient ROM code. However, auto variables can not be above 1Fh. Instead of going to 8 bit pointers, you can save ROM by using this function to read from the hard-to-reach banks. In this case, the bank may be 1-3 and the offset may be 0-15.
Availability:	All devices but only useful on PCB parts with memory over 1Fh and PCM parts with memory over FFh.
Requires:	Nothing

Examples:	`// See write_bank() example to see`
	`// how we got the data`
	`// Moves data from buffer to LCD`
	`i=0;`
	`do {`
	`  c=read_bank(1,i++);`
	`  if(c!=0x13)`
	`  lcd_putc(c);`
	`} while (c!=0x13);`

Example Files:	ex_psp.c
Also See:	write_bank(), and the "Common Questions and Answers" section for more information.

read_calibration( )

Syntax:	**value = read_calibration (*n*)**
Parameters:	***n*** is an offset into calibration memory beginning at 0
Returns:	An 8 bit byte
Function:	The read_calibration function reads location "n" of the 14000-calibration memory.

Availability:	This function is only available on the PIC14000.
Requires:	Nothing
Examples:	fin = read_calibration(16);
Example Files:	ex_14kad.c with 14kcal.c
Also See:	None

read_configuration_memory( )

Syntax:	**read_configuration_memory(**[offset], ramPtr, n**)**
Parameters:	***ramPtr*** is the destination pointer for the read results ***count*** is an 8 bit integer **offset** is an optional parameter specifying the offset into configuration memory to start reading from, offset defaults to zero if not used.
Returns:	undefined
Function:	For PIC18-Reads ***n*** bytes of configuration memory and saves the values to ***ramPtr***. For Enhanced16 devices function reads User ID, Device ID and configuration memory regions.
Availability:	All PIC18 Flash and Enhanced16 devices
Requires:	Nothing
Examples:	`int data[6];` `read_configuration_memory(data,6);`
Example Files:	None
Also See:	write_configuration_memory(), read_program_memory(), Configuration Memory Overview,

read_eeprom( )

Syntax:	**value = read_eeprom (***address* **)**
Parameters:	***address*** is an 8 bit or 16 bit int depending on the part
Returns:	An 8 bit int
Function:	Reads a byte from the specified data EEPROM address. The address begins at 0 and the range depends on the part.
Availability:	This command is only for parts with built-in EEPROMS

Requires:	Nothing
Examples:	`#define LAST_VOLUME  10` `volume = read_EEPROM (LAST_VOLUME);`
Example Files:	None
Also See:	write_eeprom(), Data Eeprom Overview

read_extended_ram( )

Syntax:	**read_extended_ram(**page,address,data,count**);**
Parameters:	**page** – the page in extended RAM to read from **address** – the address on the selected page to start reading from **data** – pointer to the variable to return the data to **count** – the number of bytes to read (0-32768)
Returns:	Undefined
Function:	To read data from the extended RAM of the PIC.
Availability:	On devices with more then 30K of RAM.
Requires:	Nothing
Examples:	`unsigned int8 data[8];` `read_extended_ram(1,0x0000,data,8);`
Example Files:	None
Also See:	read_extended_ram(), Extended RAM Overview

read_program_memory( )

read_external_memory( )

Syntax:	**READ_PROGRAM_MEMORY (***address***,** *dataptr***,** *count* **);** **READ_EXTERNAL_MEMORY (***address***,** *dataptr***,** *count* **);**
Parameters:	***address*** is 16 bits on PCM parts and 32 bits on PCH parts . The least significant bit should always be 0 in PCM. ***dataptr*** is a pointer to one or more bytes. ***count*** is a 8 bit integer on PIC16 and 16-bit for PIC18
Returns:	undefined
Function:	Reads ***count*** bytes from program memory at ***address*** to RAM at ***dataptr***. B oth of these functions operate exactly the same.
Availability:	Only devices that allow reads from program memory.

Requires:	Nothing
Examples:	`char buffer[64];` `read_external_memory(0x40000, buffer, 64);`
Example Files:	None
Also See:	write program memory( ), External memory overview , Program Eeprom Overview

read_high_speed_adc( )

Syntax:	**read_high_speed_adc(**pair**,**mode**,**result**);**	**// Individual start and read or // read only**
	read_high_speed_adc(pair**,**result**);**	**// Individual start and read**
	read_high_speed_adc(pair**);**	**// Individual start only**
	read_high_speed_adc(mode**,**result**);**	**// Global start and read or // read only**
	read_high_speed_adc(result**);**	**// Global start and read**
	read_high_speed_adc();	**// Global start only**

Parameters:

pair – Optional parameter that determines which ADC pair number to start and/or read. Valid values are 0 to total number of ADC pairs. 0 starts and/or reads ADC pair AN0 and AN1, 1 starts and/or reads ADC pair AN2 and AN3, etc. If omitted then a global start and/or read will be performed.

mode – Optional parameter, if used the values may be:

- ADC_START_AND_READ (starts conversion and reads result)
- ADC_START_ONLY (starts conversion and returns)
- ADC_READ_ONLY(reads conversion result)

result – Pointer to return ADC conversion too. Parameter is optional, if not used the read_fast_adc() function can only perform a start.

Returns: Undefined

Function:

This function is used to start an analog to digital conversion and/or read the digital value when the conversion is complete. Calls to setup_high_speed_adc() and setup_high_speed_adc_pairs() should be made sometime before this function is called.

When using this function to perform an individual start and read or individual start only, the function assumes that the pair's trigger source was set to INDIVIDUAL_SOFTWARE_TRIGGER.

When using this function to perform a global start and read, global start only, or global read only. The function will perform the following steps:

1. Determine which ADC pairs are set for GLOBAL_SOFTWARE_TRIGGER.
2. Clear the corresponding ready flags (if doing a start).
3. Set the global software trigger (if doing a start).
4. Read the corresponding ADC pairs in order from lowest to highest (if doing a read).
5. Clear the corresponding ready flags (if doing a read).

When using this function to perform a individual read only. The function

	can read the ADC result from any trigger source.
Availability:	Only on dsPIC33FJxxGSxxx devices.
Requires:	Constants are define in the device .h file.

Examples:	`//Individual start and read`
	`int16 result[2];`
	
	`setup_high_speed_adc(ADC_CLOCK_DIV_4);`
	`setup_high_speed_adc_pair(0,  INDIVIDUAL_SOFTWARE_TRIGGER);`
	`read_high_speed_adc(0, result); //starts conversion for AN0 and AN1 and stores`
	`//result in result[0] and result[1]`
	
	`//Global start and read`
	`int16 result[4];`
	
	`setup_high_speed_adc(ADC_CLOCK_DIV_4);`
	`setup_high_speed_adc_pair(0, GLOBAL_SOFTWARE_TRIGGER);`
	`setup_high_speed_adc_pair(4, GLOBAL_SOFTWARE_TRIGGER);`
	`read_high_speed_adc(result); //starts conversion for AN0, AN1,`
	`//AN8 and AN9 and`
	`//stores result in result[0], result //[1], result[2]`
	`and result[3]`

Example Files:	None
Also See:	setup_high_speed_adc(), setup_high_speed_adc_pair(), high_speed_adc_done()

read_program_eeprom( )

Syntax:	**value = read_program_eeprom (*address*)**
Parameters:	***address*** is 16 bits on PCM parts and 32 bits on PCH parts
Returns:	16 bits
Function:	Reads data from the program memory.
Availability:	Only devices that allow reads from program memory.
Requires:	Nothing

Examples:	`checksum = 0;`
	`for(i=0;i<8196;i++)`
	`  checksum^=read_program_eeprom(i);`
	`printf("Checksum is %2X\r\n",checksum);`

Example Files:	None
Also See:	write_program_eeprom(), write_eeprom(), read_eeprom(), Program Eeprom Overview

read_rom_memory( )

Syntax:	**READ_ROM_MEMORY (***address***,** *dataptr***,** *count* **);**
Parameters:	***address*** is 32 bits. The least significant bit should always be 0. ***dataptr*** is a pointer to one or more bytes. ***count*** is a 16 bit integer
Returns:	undefined
Function:	Reads ***count*** bytes from program memory at ***address*** to ***dataptr***. Due to the 24 bit program instruction size on the PCD devices, three bytes are read from each address location.
Availability:	Only devices that allow reads from program memory.
Requires:	Nothing
Examples:	`char buffer[64];` `read_program_memory(0x40000, buffer, 64);`
Example Files:	None
Also See:	write_program_eeprom() , write_eeprom(), read_eeprom(), Program eeprom overview

read_sd_adc( )

Syntax:	**value = read_sd_adc();**
Parameters:	None
Returns:	A signed 32 bit int.
Function:	To poll the SDRDY bit and if set return the signed 32 bit value stored in the SD1RESH and SD1RESL registers, and clear the SDRDY bit. The result returned depends on settings made with the setup_sd_adc() function, but will always be a signed int32 value with the most significant bits being meaningful. Refer to Section 66, 16-bit Sigma-Delta A/D Converter, of the PIC24F Family Reference Manual for more information on the module and the result format.
Availability:	Only devices with a Sigma-Delta Analog to Digital Converter (SD ADC) module.
Examples:	value = read_sd_adc()
Example Files:	None
Also See:	setup_sd_adc(), set_sd_adc_calibration(), set_sd_adc_channel()

realloc( )

Syntax:	**realloc (***ptr***,** *size***)**
Parameters:	***ptr*** is a null pointer or a pointer previously returned by calloc or malloc or realloc

	function, size is an integer representing the number of byes to be allocated.
Returns:	A pointer to the possibly moved allocated memory, if any. Returns null otherwise.
Function:	The realloc function changes the size of the object pointed to by the ptr to the size specified by the size. The contents of the object shall be unchanged up to the lesser of new and old sizes. If the new size is larger, the value of the newly allocated space is indeterminate. If ptr is a null pointer, the realloc function behaves like malloc function for the specified size. If the ptr does not match a pointer earlier returned by the calloc, malloc or realloc, or if the space has been deallocated by a call to free or realloc function, the behavior is undefined. If the space cannot be allocated, the object pointed to by ptr is unchanged. If size is zero and the ptr is not a null pointer, the object is to be freed.
Availability:	All devices
Requires:	#INCLUDE <stdlibm.h>

Examples:	`int * iptr;`
	`iptr=malloc(10);`
	`realloc(iptr,20)`
	
	`// iptr will point to a block of memory of 20 bytes, if available.`

Example Files:	None
Also See:	malloc(), free(), calloc()

release_io()

Syntax:	**release_io();**
Parameters:	none
Returns:	nothing
Function:	The function releases the I/O pins after the device wakes up from deep sleep, allowing the state of the I/O pins to change
Availability:	Devices with a deep sleep module.
Requires:	Nothing

Examples:	`unsigned int16 restart;`
	
	`restart = restart_cause();`
	
	`if(restart == RTC_FROM_DS)`
	`  release_io();`

Example Files:	None
Also See:	sleep()

reset_cpu( )

Syntax:	**reset_cpu()**

Parameters:	None
Returns:	This function never returns
Function:	This is a general purpose device reset. It will jump to location 0 on PCB and PCM parts and also reset the registers to power-up state on the PIC18XXX.
Availability:	All devices
Requires:	Nothing
Examples:	`if(checksum!=0)` `  reset_cpu();`
Example Files:	None
Also See:	None

restart_cause( )

Syntax:	**value = restart_cause()**
Parameters:	None
Returns:	A value indicating the cause of the last processor reset. The actual values are device dependent. See the device .h file for specific values for a specific device. Some example values are: WDT_FROM_SLEEP, WDT_TIMEOUT, MCLR_FROM_SLEEP and NORMAL_POWER_UP.
Function:	Returns the cause of the last processor reset.
Availability:	All devices
Requires:	Constants are defined in the devices .h file.

Examples:	`switch ( restart_cause() ) {`
	`  case WDT_FROM_SLEEP:`
	`  case WDT_TIMEOUT:`
	
	`  handle_error();`
	`}`

Example Files:	ex_wdt.c
Also See:	restart_wdt(), reset_cpu()

restart_wdt( )

Syntax:	**restart_wdt()**
Parameters:	None

Returns:	undefined
Function:	Restarts the watchdog timer. If the watchdog timer is enabled, this must be called periodically to prevent the processor from resetting. The watchdog timer is used to cause a hardware reset if the software appears to be stuck. The timer must be enabled, the timeout time set and software must periodically restart the timer. These are done differently on the PCB/PCM and PCH parts as follows: Enable/Disable: PCB/PCM #fuses; PCH setup_wdt() Timeout time: PCB/PCM setup_wdt(); PCH #fuses restart: PCB/PCM restart_wdt(); PCH restart_wdt()
Availability:	All devices
Requires:	#FUSES

Examples:	`#fuses WDT // PCB/PCM example`
	`// See setup_wdt for a`
	`// PIC18 example`
	`main() {`
	`setup_wdt(WDT_2304MS);`
	`while (TRUE) {`
	`restart_wdt();`
	`perform_activity();`
	`}`
	`}`

Example Files:	ex_wdt.c
Also See:	#FUSES, setup_wdt(), WDT or Watch Dog Timer Overview

rotate_left( )

Syntax:	**rotate_left (***address***,** *bytes***)**
Parameters:	***address*** is a pointer to memory ***bytes*** is a count of the number of bytes to work with.
Returns:	undefined
Function:	Rotates a bit through an array or structure. The address may be an array identifier or an address to a byte or structure (such as &data). Bit 0 of the lowest BYTE in RAM is considered the LSB.
Availability:	All devices
Requires:	Nothing

Examples:	`x = 0x86;`
	`rotate_left( &x, 1);`
	`// x is now 0x0d`

Example Files:	None

Also See:	rotate_right(), shift_left(), shift_right()

rotate_right( )

Syntax:	**rotate_right (***address***,** *bytes***)**
Parameters:	***address*** is a pointer to memory, ***bytes*** is a count of the number of bytes to work with.
Returns:	undefined
Function:	Rotates a bit through an array or structure. The address may be an array identifier or an address to a byte or structure (such as &data). Bit 0 of the lowest BYTE in RAM is considered the LSB.
Availability:	All devices
Requires:	Nothing

Examples:	`struct {`
	`  int cell_1 : 4;`
	`  int cell_2 : 4;`
	`  int cell_3 : 4;`
	`  int cell_4 : 4; } cells;`
	`rotate_right( &cells, 2);`
	`rotate_right( &cells, 2);`
	`rotate_right( &cells, 2);`
	`rotate_right( &cells, 2);`
	`// cell_1->4, 2->1, 3->2 and 4-> 3`

Example Files:	None
Also See:	rotate_left(), shift_left(), shift_right()

rtc_alarm_read( )

Syntax:	**rtc_alarm_read(&***datetime***);**
Parameters:	***datetime***- A structure that will contain the values to be written to the alarm in the RTCC module. Structure used in read and write functions are defined in the device header file as rtc_time_t
Returns:	void
Function:	Reads the date and time from the alarm in the RTCC module to structure ***datetime***.
Availability:	Devices that have the RTCC module.
Requires:	Nothing.
Examples:	`rtc_alarm_read(&datetime);`
Example Files:	None

Also See:	rtc_read(), rtc_alarm_read(), rtc_alarm_write(), setup_rtc_alarm(), rtc_write(), setup_rtc()

rtc_alarm_write( )

Syntax:	**rtc_alarm_write(&*datetime*);**
Parameters:	***datetime***- A structure that will contain the values to be written to the alarm in the RTCC module. Structure used in read and write functions are defined in the device header file as rtc_time_t.
Returns:	void
Function:	Writes the date and time to the alarm in the RTCC module as specified in the structure date time.
Availability:	Devices that have the RTCC module.
Requires:	Nothing.
Examples:	`rtc_alarm_write(&datetime);`
Example Files:	None
Also See:	rtc_read(), rtc_alarm_read(), rtc_alarm_write(), setup_rtc_alarm(), rtc_write(), setup_rtc()

rtc_read( )

Syntax:	**rtc_read(&*datetime*);**
Parameters:	***datetime***- A structure that will contain the values returned by the RTCC module. Structure used in read and write functions are defined in the device header file as rtc_time_t.
Returns:	void
Function:	Reads the current value of Time and Date from the RTCC module and stores the structure date time.
Availability:	Devices that have the RTCC module.
Requires:	Nothing.
Examples:	`rtc_read(&datetime);`
Example Files:	ex_rtcc.c

Also See:	rtc_read(), rtc_alarm_read(), rtc_alarm_write(), setup_rtc_alarm(), rtc_write(), setup_rtc()

rtc_write( )

Syntax:	**rtc_write(&***datetime***);**
Parameters:	***datetime***- A structure that will contain the values to be written to the RTCC module. Structure used in read and write functions are defined in the device header file as rtc_time_t.
Returns:	void
Function:	Writes the date and time to the RTCC module as specified in the structure date time.
Availability:	Devices that have the RTCC module.
Requires:	Nothing.
Examples:	`rtc_write(&datetime);`
Example Files:	ex_rtcc.c
Also See:	rtc_read() , rtc_alarm_read() , rtc_alarm_write() , setup_rtc_alarm() , rtc_write(), setup_rtc()

rtos_await( )

The RTOS is only included in the PCW, PCWH and PCWHD software packages.

Syntax:	**rtos_await (***expre***)**
Parameters:	***expre*** is a logical expression.
Returns:	None
Function:	This function can only be used in an RTOS task. This function waits for ***expre*** to be true before continuing execution of the rest of the code of the RTOS task. This function allows other tasks to execute while the task waits for ***expre*** to be true.
Availability:	All devices
Requires:	#USE RTOS
Examples:	rtos_await(kbhit());
Also See:	None

rtos_disable( )

The RTOS is only included in the PCW, PCWH, and PCWHD software packages.

Syntax:	**rtos_disable** *(task)*
Parameters:	***task*** is the identifier of a function that is being used as an RTOS task.
Returns:	None
Function:	This function disables a task which causes the task to not execute until enabled by rtos_enable(). All tasks are enabled by default.
Availability:	All devices
Requires:	#USE RTOS
Examples:	`rtos_disable(toggle_green)`
Also See:	rtos enable()

rtos_enable( )

The RTOS is only included in the PCW, PCWH, and PCWHD software packages.

Syntax:	**rtos_enable** *(task)*
Parameters:	***task*** is the identifier of a function that is being used as an RTOS task.
Returns:	None
Function:	This function enables a task to execute at it's specified rate.
Availability:	All devices
Requires:	#USE RTOS
Examples:	`rtos_enable(toggle_green);`
Also See:	rtos disable()

rtos_msg_poll( )

The RTOS is only included in the PCW, PCWH and PCWHD software packages.

Syntax:	**i = rtos_msg_poll()**
Parameters:	None
Returns:	An integer that specifies how many messages are in the queue.
Function:	This function can only be used inside an RTOS task. This function returns the number of messages that are in the queue for the task that the rtos_msg_poll() function is used in.
Availability:	All devices
Requires:	#USE RTOS
Examples:	`if(rtos_msg_poll())`
Also See:	rtos msg send(), rtos msg read()

rtos_msg_read( )

The RTOS is only included in the PCW, PCWH and PCWHD software packages.

Syntax:	**b = rtos_msg_read()**
Parameters:	None
Returns:	A byte that is a message for the task.
Function:	This function can only be used inside an RTOS task. This function reads in the next (message) of the queue for the task that the rtos_msg_read() function is used in.
Availability:	All devices
Requires:	#USE RTOS
Examples:	`if(rtos_msg_poll()) {` `  b = rtos_msg_read();`
Also See:	rtos msg poll(), rtos msg send()

rtos_msg_send( )

The RTOS is only included in the PCW, PCWH and PCWHD software packages.

Syntax:	**rtos_msg_send(***task, byte***)**
Parameters:	***task*** is the identifier of a function that is being used as an RTOS task ***byte*** is the byte to send to ***task*** as a message.
Returns:	None
Function:	This function can be used anytime after rtos_run() has been called. This function sends a byte long message (***byte***) to the task identified by ***task***.

Availability:	All devices
Requires:	#USE RTOS

Examples:	`if(kbhit())`
	`{`
	`  rtos_msg_send(echo, getc());`
	`}`

Also See:	rtos_msg_poll(), rtos_msg_read()

rtos_overrun( )

The RTOS is only included in the PCW, PCWH and PCWHD software packages.

Syntax:	**rtos_overrun(***[task]***)**
Parameters:	***task*** is an optional parameter that is the identifier of a function that is being used as an RTOS task
Returns:	A 0 (FALSE) or 1 (TRUE)
Function:	This function returns TRUE if the specified task took more time to execute than it was allocated. If no task was specified, then it returns TRUE if any task ran over it's alloted execution time.
Availability:	All devices
Requires:	#USE RTOS(statistics)
Examples:	`rtos_overrun()`
Also See:	None

rtos_run( )

The RTOS is only included in the PCW, PCWH, and PCWHD software packages.

Syntax:	**rtos_run()**
Parameters:	None
Returns:	None
Function:	This function begins the execution of all enabled RTOS tasks. This function controls the execution of the RTOS tasks at the allocated rate for each task. This function will return only when rtos_terminate() is called.
Availability:	All devices
Requires:	#USE RTOS

Examples:	`rtos_run()`
Also See:	rtos terminate()

rtos_signal( )

The RTOS is only included in the PCW, PCWH and PCWHD software packages.

Syntax:	**rtos_signal** *(sem)*
Parameters:	***sem*** is a global variable that represents the current availability of a shared system resource (a semaphore).
Returns:	None
Function:	This function can only be used by an RTOS task. This function increments ***sem*** to let waiting tasks know that a shared resource is available for use.
Availability:	All devices
Requires:	#USE RTOS
Examples:	`rtos_signal(uart_use)`
Also See:	rtos wait()

rtos_stats( )

The RTOS is only included in the PCW, PCWH and PCWHD software packages.

Syntax:	**rtos_stats(***task,&stat***)**

Parameters:	***task*** is the identifier of a function that is being used as an RTOS task.
	stat is a structure containing the following:
	struct rtos_stas_struct {
	unsigned int32 task_total_ticks; //number of ticks the task has //used
	unsigned int16 task_min_ticks; //the minimum number of ticks //used
	unsigned int16 task_max_ticks; //the maximum number of ticks //used
	unsigned int16 hns_per_tick; //us = (ticks*hns_per_tick)/10
	};

Returns:	Undefined
Function:	This function returns the statistic data for a specified ***task***.
Availability:	All devices
Requires:	#USE RTOS(statistics)

Examples:	`rtos_stats(echo, &stats)`
Also See:	None

rtos_terminate( )

The RTOS is only included in the PCW, PCWH and PCWHD software packages.

Syntax:	**rtos_terminate()**
Parameters:	None
Returns:	None
Function:	This function ends the execution of all RTOS tasks. The execution of the program will continue with the first line of code after the rtos_run() call in the program. (This function causes rtos_run() to return.)
Availability:	All devices
Requires:	#USE RTOS
Examples:	`rtos_terminate()`
Also See:	rtos run()

rtos_wait( )

The RTOS is only included in the PCW, PCWH and PCWHD software packages.

Syntax:	**rtos_wait (*sem*)**
Parameters:	***sem*** is a global variable that represents the current availability of a shared system resource (a semaphore).
Returns:	None
Function:	This function can only be used by an RTOS task. This function waits for ***sem*** to be greater than 0 (shared resource is available), then decrements ***sem*** to claim usage of the shared resource and continues the execution of the rest of the code the RTOS task. This function allows other tasks to execute while the task waits for the shared resource to be available.
Availability:	All devices
Requires:	#USE RTOS
Examples:	`rtos_wait(uart_use)`
Also See:	rtos signal()

rtos_yield( )

The RTOS is only included in the PCW, PCWH and PCWHD software packages.

Syntax:	**rtos_yield()**
Parameters:	None
Returns:	None
Function:	This function can only be used in an RTOS task. This function stops the execution of the current task and returns control of the processor to rtos_run(). When the next task executes, it will start it's execution on the line of code after the rtos_yield().
Availability:	All devices
Requires:	#USE RTOS

Examples:	`void yield(void)`
	`{`
	`  printf("Yielding...\r\n");`
	`  rtos_yield();`
	`  printf("Executing code after yield\r\n");`
	`}`

Also See:	None

set_adc_channel( )

Syntax:	**set_adc_channel (***chan* **[,***neg***]))**
Parameters:	***chan*** is the channel number to select. Channel numbers start at 0 and are labeled in the data sheet AN0, AN1. For devices with a differential ADC it sets the positive channel to use. ***neg*** is optional and is used for devices with a differential ADC only. It sets the negative channel to use, channel numbers can be 0 to 6 or VSS. If no parameter is used the negative channel will be set to VSS by default.
Returns:	undefined
Function:	Specifies the channel to use for the next read_adc() call. Be aware that you must wait a short time after changing the channel before you can get a valid read. The time varies depending on the impedance of the input source. In general 10us is good for most applications. You need not change the channel before every read if the channel does not change.
Availability:	This function is only available on devices with A/D hardware.
Requires:	Nothing

Examples:	`set_adc_channel(2);`
	`delay_us(10);`
	`value = read_adc();`

Example	ex_admm.c

Files:	
Also See:	read_adc(), setup_adc(), setup_adc_ports(), ADC Overview

set_analog_pins( )

Syntax:	**set_analog_pins(**pin, pin, pin, ...**)**
Parameters:	***pin*** - pin to set as an analog pin. Pins are defined in the device's .h file. The actual value is a bit address. For example, bit 3 of port A at address 5, would have a value of 5*8+3 or 43. This is defined as follows: #define PIN_A3 43
Returns:	undefined
Function:	To set which pins are analog and digital. Usage of function depends on method device has for setting pins to analog or digital. For devices with ANSELx, x being the port letter, registers the function is used as described above. For all other devices the function works the same as setup_adc_ports() function. Refer to the setup_adc_ports() page for documentation on how to use.
Availability:	On all devices with an Analog to Digital Converter
Requires:	Nothing
Examples:	`set_analog_pins(PIN_A0,PIN_A1,PIN_E1,PIN_B0,PIN_B5);`
Example Files:	
Also See:	setup_adc_reference(), set_adc_channel(), read_adc(), setup_adc(), setup_adc_ports(), ADC Overview

scanf( )

Syntax:	**scanf(**cstring**);** **scanf(**cstring, values...**)** **fscanf(**stream, cstring, values...**)**
Parameters:	***cstring*** is a constant string. **values** is a list of variables separated by commas. **stream** is a stream identifier.
Returns:	0 if a failure occurred, otherwise it returns the number of conversion specifiers that were read in, plus the number of constant strings read in.
Function:	Reads in a string of characters from the standard RS-232 pins and formats the string according to the format specifiers. The format specifier character (%) used within the string indicates that a conversion specification is to be done and the value is to be saved into the corresponding

argument variable. A %% will input a single %. Formatting rules for the format specifier as follows:

If fscanf() is used, then the specified stream is used, where scanf() defaults to STDIN (the last USE RS232).

Format:
The format takes the generic form %nt. **n** is an option and may be 1-99 specifying the field width, the number of characters to be inputted. **t** is the type and maybe one of the following:

c Matches a sequence of characters of the number specified by the field width (1 if no field width is specified). The corresponding argument shall be a pointer to the initial character of an array long enough to accept the sequence.

s Matches a sequence of non-white space characters. The corresponding argument shall be a pointer to the initial character of an array long enough to accept the sequence and a terminating null character, which will be added automatically.

u Matches an unsigned decimal integer. The corresponding argument shall be a pointer to an unsigned integer.

Lu Matches a long unsigned decimal integer. The corresponding argument shall be a pointer to a long unsigned integer.

d Matches a signed decimal integer. The corresponding argument shall be a pointer to a signed integer.

Ld Matches a long signed decimal integer. The corresponding argument shall be a pointer to a long signed integer.

o Matches a signed or unsigned octal integer. The corresponding argument shall be a pointer to a signed or unsigned integer.

Lo Matches a long signed or unsigned octal integer. The corresponding argument shall be a pointer to a long signed or unsigned integer.

x or X Matches a hexadecimal integer. The corresponding argument shall be a pointer to a signed or unsigned integer.

Lx or LX Matches a long hexadecimal integer. The corresponding argument shall be a pointer to a long signed or unsigned integer.

i Matches a signed or unsigned integer. The corresponding argument shall be a pointer to a signed or unsigned integer.

Li Matches a long signed or unsigned integer. The corresponding argument shall be a pointer to a long signed or unsigned integer.

f,g or e Matches a floating point number in decimal or exponential format. The corresponding argument shall be a pointer to a float.

[Matches a non-empty sequence of characters from a set of expected characters. The sequence of characters included in the set are made up of all character following the left bracket ([) up to the matching right bracket (]). Unless the first character after the left bracket is a **^**, in which case the set of characters contain all characters that do not appear between the brackets. If a **-** character is in the set and is not the first or second, where the first is a **^**, nor the last character, then the set includes all characters from the character before the **-** to the character after the **-**.
For example, %[a-z] would include all characters from **a** to **z** in the set and %[^a-z] would exclude all characters from **a** to **z** from the set. The corresponding argument shall be a pointer to the initial character of an array long enough to

	accept the sequence and a terminating null character, which will be added automatically.
n	Assigns the number of characters read thus far by the call to scanf() to the corresponding argument. The corresponding argument shall be a pointer to an unsigned integer.
	An optional assignment-suppressing character (*****) can be used after the format specifier to indicate that the conversion specification is to be done, but not saved into a corresponding variable. In this case, no corresponding argument variable should be passed to the scanf() function.
	A string composed of ordinary non-white space characters is executed by reading the next character of the string. If one of the inputted characters differs from the string, the function fails and exits. If a white-space character precedes the ordinary non-white space characters, then white-space characters are first read in until a non-white space character is read.
	White-space characters are skipped, except for the conversion specifiers **[**, **c** or **n**, unless a white-space character precedes the **[** or **c** specifiers.

Availability:	All Devices
Requires:	#USE RS232

Examples:	`char name[2-];`
	`unsigned int8 number;`
	`signed int32 time;`
	
	`if(scanf("%u%s%ld",&number,name,&time))`
	`  printf"\r\nName: %s, Number: %u, Time: %ld",name,number,time);`

Example Files:	None
Also See:	RS232 I/O Overview, getc(), putc(), printf()

set_cog_blanking( )

Syntax:	**set_cog_blanking(falling_time, rising_time);**
Parameters:	**falling time** - sets the falling edge blanking time. **rising time** - sets the rising edge blanking time.
Returns:	Nothing
Function:	To set the falling and rising edge blanking times on the Complemen Output Generator (COG) module. The time is based off the source module, the times are either a 4-bit or 6-bit value, depending on the device's datasheet for the correct width.

Availability:	All devices with a COG module.
Examples:	`set_cog_blanking(10,10);`
Example Files:	None
Also See:	setup_cog(), set_cog_phase(), set_cog_dead_band(), cog_status(),

set_cog_dead_band( )

Syntax:	**set_cog_dead_band(falling_time, rising_time);**
Parameters:	**falling time** - sets the falling edge dead-band time. **rising time** - sets the rising edge dead-band time.
Returns:	Nothing
Function:	To set the falling and rising edge dead-band times on the Complem Output Generator (COG) module. The time is based off the source module, the times are either a 4-bit or 6-bit value, depending on the device's datasheet for the correct width.
Availability:	All devices with a COG module.
Examples:	`set_cog_dead_band(16,32);`
Example Files:	None
Also See:	setup_cog(), set_cog_phase(), set_cog_blanking(), cog_status(), co

set_cog_phase( )

Syntax:	**set_cog_phase(rising_time);** **set_cog_phase(falling_time, rising_time);**
Parameters:	**falling time** - sets the falling edge phase time. **rising time** - sets the rising edge phase time.

Returns:	Nothing
Function:	To set the falling and rising edge phase times on the Complementa Output Generator (COG) module. The time is based off the source module, the times are either a 4-bit or 6-bit value, depending on th Some devices only have a rising edge delay, refer to the device's d
Availability:	All devices with a COG module.
Examples:	`set_cog_phase(10,10);`
Example Files:	None
Also See:	setup_cog(), set_cog_dead_band(), set_cog_blanking(), cog_statu

set_compare_time( )

Syntax:	**set_compare_time(***x***, o***cr, [ocrs]***])**
Parameters:	***x*** is 1-16 and defines which output compare module to set time for ***ocr*** is the compare time for the primary compare register. ***ocrs*** is the optional compare time for the secondary register. Used for dual compare mode.
Returns:	None
Function:	This function sets the compare value for the output compare module. If the output compare module is to perform only a single compare than the ***ocrs*** register is not used. If the output compare module is using double compare to generate an output pulse, the ***ocr*** signifies the start of the pulse and ***ocrs*** defines the pulse termination time.
Availability:	Only available on devices with output compare modules.
Requires:	Nothing

Examples:	`// Pin OC1 will be set when timer 2 is equal to 0xF000`
	`setup_timer2(TMR_INTERNAL | TIMER_DIV_BY_8);`
	`setup_compare_time(1, 0xF000);`
	`setup_compare(1, COMPARE_SET_ON_MATCH | COMPARE_TIMER2);`

Example Files:	None
Also See:	get_capture( ), setup_compare( ), Output Compare, PWM Overview

set_hspwm_duty( )

Syntax:	**setup_hspwm_duty(**duty**);** **set_hspwm_duty(**unit, primary, [secondary]**);**

Parameters:	**duty** - A 16-bit constant or variable to set the master duty cycle **unit** - The High Speed PWM unit to set. **primary** - A 16-bit constant or variable to set the primary duty cycle. **secondary** - An optional 16-bit constant or variable to set the secondary duty cycle. Secondary duty cycle is only used in Independent PWM mode. Not available on all devices, refer to device datasheet for availability.
Returns:	undefined
Function:	Sets up the specified High Speed PWM unit.
Availability:	Only on devices with a built-in High Speed PWM module (dsPIC33FJxxGSxxx, dsPIC33EPxxxMUxxx, dsPIC33EPxxxMCxxx, and dsPIC33EVxxxGMxxx devices)
Requires:	Constants are defined in the device's .h file

Examples:	`set_hspwm_duty(0x7FFF);  //sets the High Speed PWM master duty cycle`
	`set_hspwm_duty(1, 0x3FFF);  //sets unit 1's primary duty cycle`

Example Files:	None
Also See:	setup_hspwm_unit(), set_hspwm_phase(), set_hspwm_event(), setup_hspwm_blanking(), setup_hspwm_trigger(), set_hspwm_override(), get_hspwm_capture(), setup_hspwm_chop_clock(), setup_hspwm_unit_chop_clock() setup_hspwm(), setup_hspwm_secondary()

set_hspwm_event( )

set_hspwm_event_secondary( )

Syntax:	**set_hspwm_event(**settings, compare_time**);** **set_shwpm_event_secondary(**settings, compare_time**);** **//if available**
Parameters:	**settings** - special event timer setting or'd with a value from 1 to 16 to set the prescaler. The following are the settings available for the special event time: · HSPWM_SPECIAL_EVENT_INT_ENABLED · HSPWM_SPECIAL_EVENT_INT_DISABLED **compare_time** - the compare time for the special event to occur.
Returns:	undefined
Function:	Sets up the specified High Speed PWM unit.
Availability:	Only on devices with a built-in High Speed PWM module (dsPIC33FJxxGSxxx, dsPIC33EPxxxMUxxx, dsPIC33EPxxxMCxxx, and dsPIC33EVxxxGMxxx devices)
Requires:	Constants are defined in the device's .h file
Examples:	`set_hspwm_event(HSPWM_SPECIAL_EVENT_INT_ENABLED,0x1000);`

Example Files:	None
Also See:	setup_hspwm_unit(), set_hspwm_phase(), set_hspwm_duty(), setup_hspwm_blanking(), setup_hspwm_trigger(), set_hspwm_override(), get_hspwm_capture(), setup_hspwm_chop_clock(), setup_hspwm_unit_chop_clock() setup_hspwm(), setup_hspwm_secondary()

set_hspwm_override( )

Syntax:	**set_hspwm_override(**unit, setting**);**
Parameters:	**unit** - the High Speed PWM unit to override. **settings** - the override settings to use. The valid options vary depending on the device. See the device's .h file for all options. Some typical options include: · HSPWM_FORCE_H_1 · HSPWM_FORCE_H_0 · HSPWM_FORCE_L_1 · HSPWM_FORCE_L_0
Returns:	Undefined
Function:	Setup and High Speed PWM uoverride settings.
Availability:	Only on devices with a built-in High Speed PWM module (dsPIC33FJxxGSxxx, dsPIC33EPxxxMUxxx, dsPIC33EPxxxMCxxx, and dsPIC33EVxxxGMxxx devices)
Requires:	None
Examples:	`setup_hspwm_override(1,HSPWM_FORCE_H_1|HSPWM_FORCE_L_0);`
Example Files:	None
Also See:	setup_hspwm_unit(), set_hspwm_phase(), set_hspwm_duty(), set_hspwm_event(), setup_hspwm_blanking(), setup_hspwm_trigger(), get_hspwm_capture(), setup_hspwm_chop_clock(), setup_hspwm_unit_chop_clock() setup_hspwm(), setup_hspwm_secondary()

set_hspwm_phase( )

Syntax:	**set_hspwm_phase(**unit, primary, [secondary]**);**
Parameters:	**unit** - The High Speed PWM unit to set. **primary** - A 16-bit constant or variable to set the primary duty cycle.

	secondary - An optional 16-bit constant or variable to set the secondary duty cycle. Secondary duty cycle is only used in Independent PWM mode. Not available on all devices, refer to device datasheet for availability.
Returns:	undefined
Function:	Sets up the specified High Speed PWM unit.
Availability:	Only on devices with a built-in High Speed PWM module (dsPIC33FJxxGSxxx, dsPIC33EPxxxMUxxx, dsPIC33EPxxxMCxxx, and dsPIC33EVxxxGMxxx devices)
Requires:	Constants are defined in the device's .h file
Examples:	`set_hspwm(1,0x1000,0x8000);`
Example Files:	None
Also See:	setup_hspwm_unit(), set_hspwm_duty(), set_hspwm_event(), setup_hspwm_blanking(), setup_hspwm_trigger(), set_hspwm_override(), get_hspwm_capture(), setup_hspwm_chop_clock(), setup_hspwm_unit_chop_clock() setup_hspwm(), setup_hspwm_secondary()

set_nco_inc_value( )

Syntax:	**set_nco_inc_value**(value**);**
Parameters:	**value**- 16-bit value to set the NCO increment registers to (0 - 65535)
Returns:	Undefined
Function:	Sets the value that the NCO's accumulator will be incremented by on each clock pulse. The increment registers are double buffered so the new value won't be applied until the accumulator rolls-over.
Availability:	On devices with a NCO module.
Examples:	`set_nco_inc_value(inc_value);  //sets the new increment value`
Example Files:	None
Also See:	setup_nco( ), get_nco_accumulator( ), get_nco_inc_value( )

Syntax:	**set_open_drain_a(value)** **set_open_drain_b(value)** **set_open_drain_c(value)** **set_open_drain_d(value)** **set_open_drain_e(value)** **set_open_drain_f(value)** **set_open_drain_g(value)** **set_open_drain_h(value)** **set_open_drain_j(value)** **set_open_drain_k(value)**
Parameters:	**value** – is a bitmap corresponding to the pins of the port. Setting a bit causes the

	corresponding pin to act as an open-drain output.
Returns:	Nothing
Function	Enables/Disables open-drain output capability on port pins. Not all ports or port pins have open-drain capability, refer to devices datasheet for port and pin availability.
Availability	On device that have open-drain capability.
Examples:	set_open_drain_b(0x0001); //enables open-drain output on PIN_B0, disable on all //other port B pins.
Example Files:	None.

set_power_pwm_override( )

Syntax:	**set_power_pwm_override(***pwm***,** *override***,** *value***)**
Parameters:	***pwm*** is a constant between 0 and 7 ***Override*** is true or false ***Value*** is 0 or 1
Returns:	undefined
Function:	***pwm*** selects which module will be affected. **Override** determines whether the output is to be determined by the OVDCONS register or the PDC registers. When override is false, the PDC registers determine the output. When override is true, the output is determined by the value stored in OVDCONS. ***value*** determines if pin is driven to it's active staet or if pin will be inactive. I will be driven to its active state, 0 pin will be inactive.
Availability:	All devices equipped with PWM.
Requires:	None

Examples:	`set_power_pwm_override(1, true, 1);  //PWM1 will be //overridden to active //state`
	`set_power_pwm_override(1, false, 0); //PMW1 will not be //overidden`

Example Files:	None
Also See:	setup_power_pwm(), setup_power_pwm_pins(), set_power_pwmX_duty()

set_power_pwmx_duty( )

Syntax:	**set_power_pwm*X*_duty(***duty***)**
Parameters:	***X*** is 0, 2, 4, or 6 ***Duty*** is an integer between 0 and 16383.
Returns:	undefined
Function:	Stores the value of duty into the appropriate PDCXL/H register. This duty value is the

	amount of time that the PWM output is in the active state.
Availability:	All devices equipped with PWM.
Requires:	None
Examples:	`set_power_pwmx_duty(4000);`
Example Files:	None
Also See:	setup_power_pwm(), setup_power_pwm_pins(), set_power_pwm_override()

set_pullup( )

Syntax:	**set_Pullup(**state**, [** pin**])**
Parameters:	**Pins** are defined in the devices .h file. The actual number is a bit address. For example, port a (byte 5) bit 3 would have a value of 5*8+3 or 43. This is defined as follows: #DEFINE PIN_A3 43 . The pin could also be a variable that has a value equal to one of the predefined pin constants. Note if no pin is provided in the function call, then all of the pins are set to the passed in state. **State** is either true or false.
Returns:	undefined
Function:	Sets the pin's pull up state to the passed in state value. If no pin is included in the function call, then all valid pins are set to the passed in state.
Availability:	All devices.
Requires:	Pin constants are defined in the devices .h file.

Examples:	`set_pullup(true, PIN_B0);`
	`  //Sets pin B0's pull up state to true`
	
	`  set_pullup(false);`
	`  //Sets all pin's pull up state to false`

Example Files:	None
Also See:	None

set_pwm1_duty( ) set_pwm2_duty( ) set_pwm3_duty( ) set_pwm4_duty( ) set_pwm5_duty( )

Syntax:	**set_pwm1_duty (***value***)** **set_pwm2_duty (***value***)** **set_pwm3_duty (***value***)** **set_pwm4_duty (***value***)**

	set_pwm5_duty (*value*)
Parameters:	***value*** may be an 8 or 16 bit constant or variable.
Returns:	undefined
Function:	Writes the 10-bit value to the PWM to set the duty. An 8-bit value may be used if the most significant bits are not required. The 10 bit value is then used to determine the duty cycle of the PWM signal as follows: • duty cycle = value / [4 * (PR2 +1)] If an 8-bit value is used, the duty cycle of the PWM signal is determined as follows: • duty cycle=value/(PR2+1) Where PR2 is the maximum value timer 2 will count to before toggling the output pin.
Availability:	This function is only available on devices with CCP/PWM hardware.
Requires:	None

Examples:	`// For a 20 mhz clock, 1.2 khz frequency,`
	`// t2DIV set to 16, PR2 set to 200`
	`// the following sets the duty to 50% (or 416 us).`
	
	`long duty;`
	
	`duty = 408; // [408/(4*(200+1))]=0.5=50%`
	`set_pwm1_duty(duty);`

Example Files:	ex_pwm.c
Also See:	setup_ccpX(), set_ccpX_compare_time(), set_timer_period_ccpX(), set_timer_ccpX(), get_timer_ccpX(), get_capture_ccpX(), get_captures32_ccpX()

set_rtcc( ) set_timer0( ) set_timer1( ) set_timer2( ) set_timer3( ) set_timer4( ) set_timer5( )

Syntax:	**set_timer0(value) or set_rtcc (value)** **set_timer1(value)** **set_timer2(value)** **set_timer3(value)** **set_timer4(value)** **set_timer5(value)**
Parameters:	Timers 1 & 5 get a 16 bit int. Timer 2 and 4 gets an 8 bit int. Timer 0 (AKA RTCC) gets an 8 bit int except on the PIC18XXX where it needs a 16 bit int. Timer 3 is 8 bit on PIC16 and 16 bit on PIC18
Returns:	undefined
Function:	Sets the count value of a real time clock/counter. RTCC and Timer0 are the same. All timers count up. When a timer reaches the maximum value it will flip over to 0 and continue counting (254, 255, 0, 1, 2...)

Availability:	Timer 0 - All devices Timers 1 & 2 - Most but not all PCM devices Timer 3 - Only PIC18XXX and some pick devices Timer 4 - Some PCH devices Timer 5 - Only PIC18XX31
Requires:	Nothing

Examples:	`// 20 mhz clock, no prescaler, set timer 0`
	`// to overflow in 35us`
	
	`set_timer0(81);  // 256-(.000035/(4/20000000))`

Example Files:	ex_patg.c
Also See:	set_timer1(), get_timerX() Timer0 Overview, Timer1Overview, Timer2 Overview, Timer5 Overview

set_ticks( )

Syntax:	**set_ticks([**stream**],**value**);**
Parameters:	**stream** – optional parameter specifying the stream defined in #USE TIMER **value** – a 8, 16 or 32 bit integer, specifying the new value of the tick timer. (int8, int16 or int32)
Returns:	void
Function:	Sets the new value of the tick timer. Size passed depends on the size of the tick timer.
Availability:	All devices.
Requires:	#USE TIMER(options)

Examples:	`#USE TIMER(TIMER=1,TICK=1ms,BITS=16,NOISR)`
	
	`void main(void) {`
	`  unsigned int16 value = 0x1000;`
	
	`  set_ticks(value);`
	`}`

Example Files:	None
Also See:	#USE TIMER, get_ticks()

setup_sd_adc_calibration( )

Syntax:	**setup_sd_adc_calibration(model);**
Parameters:	***mode***- selects whether to enable or disable calibration mode for the SD ADC module. The following defines are made in the device's *.h* file: 1 SDADC_START_CALIBRATION_MODE 2 SDADC_END_CALIBRATION_MODE

Returns:	Nothing
Function:	To enable or disable calibration mode on the Sigma-Delta Analog to Digital Converter (SD ADC) module. This can be used to determine the offset error of the module, which then can be subtracted from future readings.
Availability:	Only devices with a SD ADC module.

Examples:	signed int 32 result, calibration;
	
	set_sd_adc_calibration(SDADC_START_CALIBRATION_MODE);
	calibration = read_sd_adc();
	set_sd_adc_calibration(SDADC_END_CALIBRATION_MODE);
	
	result = read_sd_adc() - calibration;

Example Files:	None
Also See:	setup_sd_adc(), read_sd_adc(), set_sd_adc_channel()

set_sd_adc_channel( )

Syntax:	**setup_sd_adc(channel);**
Parameters:	***channel***- sets the SD ADC channel to read. Channel can be 0 to read the difference between CH0+ and CH0-, 1 to read the difference between CH1+ and CH1-, or one of the following: 1 SDADC_CH1SE_SVSS 2 SDADC_REFERENCE
Returns:	Nothing
Function:	To select the channel that the Sigma-Delta Analog to Digital Converter (SD ADC) performs the conversion on.
Availability:	Only devices with a SD ADC module.
Examples:	set_sd_adc_channel(0);
Example Files:	None
Also See:	setup_sd_adc(), read_sd_adc(), set_sd_adc_calibration()

set_timerA( )

Syntax:	**set_timerA(**value**);**
Parameters:	An 8 bit integer. Specifying the new value of the timer. (int8)
Returns:	undefined
Function:	Sets the current value of the timer. All timers count up. When a timer reaches the maximum value it will flip over to 0 and continue counting (254, 255, 0, 1, 2, …).

Availability:	This function is only available on devices with Timer A hardware.
Requires:	Nothing

Examples:	`// 20 mhz clock, no prescaler, set timer A`
	`// to overflow in 35us`
	
	`set_timerA(81); // 256-(.000035/(4/20000000))`

Example Files:	none
Also See:	get_timerA( ), setup_timer_A( ), TimerA Overview

set_timerB( )

Syntax:	**set_timerB(**value**);**
Parameters:	An 8 bit integer. Specifying the new value of the timer. (int8)
Returns:	undefined
Function:	Sets the current value of the timer. All timers count up. When a timer reaches the maximum value it will flip over to 0 and continue counting (254, 255, 0, 1, 2, …).
Availability:	This function is only available on devices with Timer B hardware.
Requires:	Nothing

Examples:	`// 20 mhz clock, no prescaler, set timer B`
	`// to overflow in 35us`
	
	`set_timerB(81); // 256-(.000035/(4/20000000))`

Example Files:	none
Also See:	get_timerB( ), setup_timer_B( ), TimerB Overview

set_timerx( )

Syntax:	**set_timerX(***value***)**
Parameters:	A 16 bit integer, specifiying the new value of the timer. (int16)
Returns:	void
Function:	Allows the user to set the value of the timer.
Availability:	This function is available on all devices that have a valid timerX.
Requires:	Nothing
Examples:	`if(EventOccured())` `  set_timer2(0);//reset the timer.`
Example Files:	None

Also See:	Timer Overview, set_timerX()

set_rtcc( ) set_timer0( ) set_timer1( ) set_timer2( ) set_timer3( ) set_timer4( ) set_timer5( )

Syntax:	**set_timer0(value)** **or** **set_rtcc (value)** **set_timer1(value)** **set_timer2(value)** **set_timer3(value)** **set_timer4(value)** **set_timer5(value)**
Parameters:	Timers 1 & 5 get a 16 bit int. Timer 2 and 4 gets an 8 bit int. Timer 0 (AKA RTCC) gets an 8 bit int except on the PIC18XXX where it needs a 16 bit int. Timer 3 is 8 bit on PIC16 and 16 bit on PIC18
Returns:	undefined
Function:	Sets the count value of a real time clock/counter. RTCC and Timer0 are the same. All timers count up. When a timer reaches the maximum value it will flip over to 0 and continue counting (254, 255, 0, 1, 2...)
Availability:	Timer 0 - All devices Timers 1 & 2 - Most but not all PCM devices Timer 3 - Only PIC18XXX and some pick devices Timer 4 - Some PCH devices Timer 5 - Only PIC18XX31
Requires:	Nothing

Examples:	`// 20 mhz clock, no prescaler, set timer 0`
	`// to overflow in 35us`
	
	`set_timer0(81);  // 256-(.000035/(4/20000000))`

Example Files:	ex_patg.c
Also See:	set_timer1(), get_timerX() Timer0 Overview, Timer1Overview, Timer2 Overview, Timer5 Overview

set_tris_x( )

Syntax:	**set_tris_a (*value*)** **set_tris_b (*value*)** **set_tris_c (*value*)** **set_tris_d (*value*)** **set_tris_e (*value*)** **set_tris_f (*value*)** **set_tris_g (*value*)**

	set_tris_h (*value*) **set_tris_j (*value*)** **set_tris_k (*value*)**
Parameters:	***value*** is an 8 bit int with each bit representing a bit of the I/O port.
Returns:	undefined
Function:	These functions allow the I/O port direction (TRI-State) registers to be set. This must be used with FAST_IO and when I/O ports are accessed as memory such as when a # BYTE directive is used to access an I/O port. Using the default standard I/O the built in functions set the I/O direction automatically. Each bit in the value represents one pin. A 1 indicates the pin is input and a 0 indicates it is output.
Availability:	All devices (however not all devices have all I/O ports)
Requires:	Nothing

Examples:	`SET_TRIS_B( 0x0F );`
	`  // B7,B6,B5,B4 are outputs`
	`  // B3,B2,B1,B0 are inputs`

Example Files:	lcd.c
Also See:	#USE FAST_IO, #USE FIXED_IO, #USE STANDARD_IO, General Purpose I/O

set_uart_speed( )

Syntax:	**set_uart_speed (*baud*, [*stream, clock*])**
Parameters:	***baud*** is a constant representing the number of bits per second. ***stream*** is an optional stream identifier. ***clock*** is an optional parameter to indicate what the current clock is if it is different from the #use delay value
Returns:	undefined
Function:	Changes the baud rate of the built-in hardware RS232 serial port at run-time.
Availability:	This function is only available on devices with a built in UART.
Requires:	#USE RS232

Examples:	`// Set baud rate based on setting`
	`// of pins B0 and B1`
	
	`switch( input_b() & 3 ) {`
	`  case 0 : set_uart_speed(2400);  break;`
	`  case 1 : set_uart_speed(4800);  break;`
	`  case 2 : set_uart_speed(9600);  break;`
	`  case 3 : set_uart_speed(19200);  break;`
	`}`

Example Files:	loader.c
Also See:	#USE RS232, putc(), getc(), setup uart(), RS232 I/O Overview,

setjmp( )

Syntax:	**result = setjmp (*env*)**
Parameters:	***env***: The data object that will receive the current environment
Returns:	If the return is from a direct invocation, this function returns 0. If the return is from a call to the longjmp function, the setjmp function returns a nonzero value and it's the same value passed to the longjmp function.
Function:	Stores information on the current calling context in a data object of type jmp_buf and which marks where you want control to pass on a corresponding longjmp call.
Availability:	All devices
Requires:	#INCLUDE <setjmp.h>
Examples:	`result = setjmp(jmpbuf);`
Example Files:	None
Also See:	longjmp()

setup_adc(mode)

Syntax:	**setup_adc (*mode*);** **setup_adc2(*mode*);**
Parameters:	***mode***- Analog to digital mode. The valid options vary depending on the device. See the devices .h file for all options. Some typical options include: • ADC_OFF • ADC_CLOCK_INTERNAL • ADC_CLOCK_DIV_32
Returns:	undefined
Function:	Configures the analog to digital converter.
Availability:	Only the devices with built in analog to digital converter.
Requires:	Constants are defined in the devices .h file.

Examples:	`setup_adc_ports( ALL_ANALOG );`
	`setup_adc(ADC_CLOCK_INTERNAL );`
	`set_adc_channel( 0 );`
	`value = read_adc();`
	`setup_adc( ADC_OFF );`

Example Files:	ex_admm.c
Also See:	setup_adc_ports(), set_adc_channel(), read_adc(), #DEVICE, ADC Overview, see header file for device selected

setup_adc_ports( )

Syntax: setup_adc_ports (***value***)
setup_adc_ports ***(ports, [reference])***

Parameters: ***value*** - a constant defined in the devices .h file

ports - is a constant specifying the ADC pins to use
reference - is an optional constant specifying the ADC reference to use
By default, the reference voltage are Vss and Vdd

Returns: undefined

Function: Sets up the ADC pins to be analog, digital, or a combination and the voltage reference to use when computing the ADC value. The allowed analog pin combinations vary depending on the chip and are defined by using the bitwise OR to concatenate selected pins together. Check the device include file for a complete list of available pins and reference voltage settings. The constants ALL_ANALOG and NO_ANALOGS are valid for all chips. Some other example pin definitions are:

Also See: setup_adc(), read_adc(), set_adc_channel(), ADC Overview

setup_adc_reference( )

Syntax:	**setup_adc_reference(**reference**)**
Parameters:	**reference** - the voltage reference to set the ADC. The valid options depend on the device, see the device's .h file for all options. Typical options include: · VSS_VDD · VSS_VREF · VREF_VREF · VREF_VDD
Returns:	undefined
Function:	To set the positive and negative voltage reference for the Analog to Digital Converter (ADC) uses.
Availability:	Only on devices with an ADC and has ANSELx, x being the port letter, registers for setting which pins are analog or digital.
Requires:	Nothing
Examples:	`set_adc_reference(VSS_VREF);`
Example Files:	
Also See:	set_analog_pins(), set_adc_channel(), read_adc(), setup_adc(), setup_adc_ports(), ADC Overview

setup_at( )

Syntax:	**setup_at(**settings);
Parameters:	**settings** - the setup of the AT module. See the device's header file for all options. Some typical options include: · AT_ENABLED · AT_DISABLED · AT_MULTI_PULSE_MODE · AT_SINGLE_PULSE_MODE
Returns:	Nothing
Function:	To setup the Angular Timer (AT) module.
Availability:	All devices with an AT module.
Requires:	Constants defined in the device's .h file
Examples:	`setup_at(AT_ENABLED|AT_MULTI_PULSE_MODE|AT_INPUT_ATIN);`
Example Files:	None
Also See:	at_set_resolution(), at_get_resolution(), at_set_missing_pulse_delay(), at_get_missing_pulse_delay(), at_get_period(), at_get_phase_counter(), at_set_set_point(), at_get_set_point(), at_get_set_point_error(), at_enable_interrupts(), at_disable_interrupts(), at_clear_interrupts(), at_interrupt_active(), at_setup_cc(), at_set_compare_time(), at_get_capture(), at_get_status()

setup_ccp1( ) setup_ccp2( ) setup_ccp3( ) setup_ccp4( ) setup_ccp5( ) setup_ccp6( )

Syntax:	**setup_ccp1 (***mode***)** **or setup_ccp1 (***mode, pwm***)** **setup_ccp2 (***mode***)** **or setup_ccp2 (***mode, pwm***)** **setup_ccp3 (***mode***)** **or setup_ccp3 (***mode, pwm***)** **setup_ccp5 (***mode***)** **or setup_ccp5 (***mode, pwm***)** **setup_ccp6 (***mode***)** **or setup_ccp6 (***mode, pwm***)**
Parameters:	***mode*** is a constant. Valid constants are defined in the devices .h file and refer to devices .h file for all options, some options are as follows: Disable the CCP: CCP_OFF Set CCP to capture mode:

CCP_CAPTURE_FE	**Capture on falling edge**
CCP_CAPTURE_RE	Capture on rising edge
CCP_CAPTURE_DIV_4	Capture after 4 pulses
CCP_CAPTURE_DIV_16	Capture after 16 pulses

Set CCP to compare mode:

CCP_COMPARE_SET_ON_MATCH	**Output high on compare**
CCP_COMPARE_CLR_ON_MATCH	Output low on compare

CCP_COMPARE_INT	interrupt on compare
CCP_COMPARE_RESET_TIMER	Reset timer on compare

Set CCP to PWM mode:

CCP_PWM	**Enable Pulse Width Modulator**

Constants used for ECCP modules are as follows:

CCP_PWM_H_H	
CCP_PWM_H_L	
CCP_PWM_L_H	
CCP_PWM_L_L	
CCP_PWM_FULL_BRIDGE	
CCP_PWM_FULL_BRIDGE_REV	
CCP_PWM_HALF_BRIDGE	
CCP_SHUTDOWN_ON_COMP1	shutdown on Comparator 1 change
CCP_SHUTDOWN_ON_COMP2	shutdown on Comparator 2 change
CCP_SHUTDOWN_ON_COMP	Either Comp. 1 or 2 change
CCP_SHUTDOWN_ON_INT0	VIL on INT pin
CCP_SHUTDOWN_ON_COMP1_INT0	VIL on INT pin or Comparator 1 change
CCP_SHUTDOWN_ON_COMP2_INT0	VIL on INT pin or Comparator 2 change
CCP_SHUTDOWN_ON_COMP_INT0	VIL on INT pin or Comparator 1 or 2 change
CCP_SHUTDOWN_AC_L	Drive pins A and C high
CCP_SHUTDOWN_AC_H	Drive pins A and C low
CCP_SHUTDOWN_AC_F	Drive pins A and C tri-state
CCP_SHUTDOWN_BD_L	Drive pins B and D high
CCP_SHUTDOWN_BD_H	Drive pins B and D low
CCP_SHUTDOWN_BD_F	Drive pins B and D tri-state
CCP_SHUTDOWN_RESTART	the device restart after a shutdown event
CCP_DELAY	use the dead-band delay

pwm parameter is an optional parameter for chips that includes ECCP module. This parameter allows setting the shutdown time. The value may be 0-255.

Returns: Undefined

Function: Initialize the CCP. The CCP counters may be accessed using the long variables CCP_1 and CCP_2. The CCP operates in 3 modes. In capture mode it will copy the timer 1 count value to CCP_x when the input pin event occurs. In compare mode it will trigger an action when timer 1 and CCP_x are equal. In PWM mode it will generate a square wave. The PCW wizard will help to set the correct mode and timer settings for a particular application.

Availability: This function is only available on devices with CCP hardware.

Requires: Constants are defined in the devices .h file.

Examples:	`setup_ccp1(CCP_CAPTURE_RE);`
Example Files:	ex_pwm.c, ex_ccpmp.c, ex_ccp1s.c
Also See:	set_pwmX_duty(), set_ccpX_compare_time(), set_timer_period_ccpX(), set_timer_ccpX(), get_timer_ccpX(), get_capture_ccpX(), get_captures32_ccpX()

setup_clc1() setup_clc2() setup_clc3() setup_clc4()

Syntax:	setup_clc1(mode);
	setup_clc2(mode);
	setup_clc3(mode);
	setup_clc4(mode);

Parameters:	**mode** – The mode to setup the Configurable Logic Cell (CLC) module into. See the device's .h file for all options. Some typical options include: CLC_ENABLED CLC_OUTPUT CLC_MODE_AND_OR CLC_MODE_OR_XOR
Returns:	Undefined.
Function:	Sets up the CLC module to performed the specified logic. Please refer to the device datasheet to determine what each input to the CLC module does for the select logic function
Availability:	On devices with a CLC module.
Returns:	Undefined.
Examples:	`setup_clc1(CLC_ENABLED | CLC_MODE_AND_OR);`
Example Files:	None
Also See:	clcx_setup_gate(), clcx_setup_input()

setup_comparator( )

Syntax:	**setup_comparator (*mode*)**
Parameters:	***mode*** is a constant. Valid constants are in the devices .h file refer to devices .h file for valid options. Some typical options are as follows: A0_A3_A1_A2 A0_A2_A1_A2 NC_NC_A1_A2 NC_NC_NC_NC A0_VR_A1_VR A3_VR_A2_VR A0_A2_A1_A2_OUT_ON_A3_A4

	A3_A2_A1_A2
Returns:	undefined
Function:	Sets the analog comparator module. The above constants have four parts representing the inputs: C1-, C1+, C2-, C2+
Availability:	This function is only available on devices with an analog comparator.
Requires	Constants are defined in the devices .h file.

Examples:	`// Sets up two independent comparators (C1 and C2),`
	`// C1 uses A0 and A3 as inputs (- and +), and C2`
	`// uses A1 and A2 as inputs`
	`setup_comparator(A0_A3_A1_A2);`

Example Files:	ex_comp.c
Also See:	Analog Comparator overview

setup_counters( )

Syntax:	**setup_counters (***rtcc_state***,** *ps_state***)**
Parameters:	***rtcc_state*** may be one of the constants defined in the devices .h file. For example: RTCC_INTERNAL, RTCC_EXT_L_TO_H or RTCC_EXT_H_TO_L ***ps_state*** may be one of the constants defined in the devices .h file. For example: RTCC_DIV_2, RTCC_DIV_4, RTCC_DIV_8, RTCC_DIV_16, RTCC_DIV_32, RTCC_DIV_64, RTCC_DIV_128, RTCC_DIV_256, WDT_18MS, WDT_36MS, WDT_72MS, WDT_144MS, WDT_288MS, WDT_576MS, WDT_1152MS, WDT_2304MS
Returns:	undefined
Function:	Sets up the RTCC or WDT. The rtcc_state determines what drives the RTCC. The PS state sets a prescaler for either the RTCC or WDT. The prescaler will lengthen the cycle of the indicated counter. If the RTCC prescaler is set the WDT will be set to WDT_18MS. If the WDT prescaler is set the RTCC is set to RTCC_DIV_1. This function is provided for compatibility with older versions. setup_timer_0 and setup_WDT are the recommended replacements when possible. For PCB devices if an external RTCC clock is used and a WDT prescaler is used then this function must be used.
Availability:	All devices
Requires:	Constants are defined in the devices .h file.
Examples:	`setup_counters (RTCC_INTERNAL, WDT_2304MS);`
Example Files:	None
Also See:	setup wdt(), setup_timer 0(), see header file for device selected

setup_cog( )

Syntax:	**setup_cog(**mode**, [**shutdown]**);** **setup_cog(mode, [shutdown], [sterring]);**
Parameters:	**mode**- the setup of the COG module. See the device's .h file for all optio Some typical options include: • COG_ENABLED • COG_DISABLED • COG_CLOCK_HFINTOSC • COG_CLOCK_FOSC **shutdown**- the setup for the auto-shutdown feature of COG module. See the device's .h file for all the options. Some typical options include: • COG_AUTO_RESTART • COG_SHUTDOWN_ON_C1OUT • COG_SHUTDOWN_ON_C2OUT **steering**- optional parameter for steering the PWM signal to COG output the COG pins static level. Used when COG is set for steered PWM or sy PWM modes. Not available on all devices, see the device's .h file if avail Some typical options include: • COG_PULSE_STEERING_A • COG_PULSE_STEERING_B • COG_PULSE_STEERING_C • COG_PULSE_STEERING_D
Returns:	undefined
Function:	Sets up the Complementary Output Generator (COG) module, the auto-s the module and if available steers the signal to the different output pins.
Availability:	All devices with a COG module.

Examples:	`setup_cog(COG_ENABLED | COG_PWM | COG_FALLING_SOURCE_PWM3 |`
	`COG_RISING_SOURCE_PWM3, COG_NO_AUTO_SHUTDOWN,`
	`COG_PULSE_STEERING_A | COG_PULSE_STEERING_B);`

Example Files:	None
Also See:	set_cog_dead_band(), set_cog_phase(), set_cog_blanking(), cog_status

setup_crc( )

Syntax:	**setup_crc(**polynomial terms**)**

Parameters:	**polynomial**- This will setup the actual polynomial in the CRC engine. The power of ea term is passed separated by a comma. 0 is allowed, but ignored. The following define is added to the device's header file to enable little-endian shift direction: CRC_LITTLE_ENDIAN
Returns:	Nothing
Function:	Configures the CRC engine register with the polynomial.
Availability:	Only devices with a built-in CRC module.
Examples:	`setup_crc(12, 5);` // CRC Polynomial is $x^{12}+x^{5}+1$ `setup_crc(16, 15, 3, 1);` // CRC Polynomial is $x^{16}+x^{15}+x^{3}+x^{1}+1$
Example Files:	None
Also See:	crc_init(), crc_calc(), crc_calc8()

setup_cwg( )

Syntax:	**setup_cwg(**mode**,**shutdown**,**dead_time_rising**,**dead_time_falling**)**
Parameters:	**mode**- the setup of the CWG module. See the device's .h file for all options. Some typical options include: • CWG_ENABLED • CWG_DISABLED • CWG_OUTPUT_B • CWG_OUTPUT_A **shutdown**- the setup for the auto-shutdown feature of CWG module. See the device's .h file for all the options. Some typical options include: CWG_AUTO_RESTART CWG_SHUTDOWN_ON)COMP1 CWG_SHUTDOWN_ON_FLT CWG_SHUTDOWN_ON_CLC2 **dead_time_rising**- value specifying the dead time between A and B on the rising edge. (0-63) **dead_time_rising**- value specifying the dead time between A and B on the falling edge. (0-63)
Returns:	undefined
Function:	Sets up the CWG module, the auto-shutdown feature of module and the rising and falling dead times of the module.
Availability:	All devices with a CWG module.
Examples:	`setup_cwg(CWG_ENABLED|CWG_OUTPUT_A|CWG_OUTPUT_B|` `CWG_INPUT_PWM1,CWG_SHUTDOWN_ON_FLT,60,30);`
Example Files:	None

Also See:	cwg_status( ), cwg_restart( )

setup_dac( )

Syntax:	**setup_dac(mode);**
Parameters:	***mode-*** The valid options vary depending on the device. See the devices .h file for all options. Some typical options include: · DAC_OUTPUT
Returns:	undefined
Function:	Configures the DAC including reference voltage.
Availability:	Only the devices with built in digital to analog converter.
Requires:	Constants are defined in the devices .h file.
Examples:	`setup_dac(DAC_VDD | DAC_OUTPUT);` `dac_write(value);`
Example Files:	None
Also See:	dac_write( ), DAC Overview, See header file for device selected

setup_external_memory( )

Syntax:	**SETUP_EXTERNAL_MEMORY(** *mode* **);**
Parameters:	***mode*** is one or more constants from the device header file OR'ed together.
Returns:	undefined
Function:	Sets the mode of the external memory bus.
Availability:	Only devices that allow external memory.
Requires:	Constants are defined in the device.h file

Examples:	`setup_external_memory(EXTMEM_WORD_WRITE`
	`|EXTMEM_WAIT_0 );`
	`setup_external_memory(EXTMEM_DISABLE);`

Example Files:	None

Also See:	WRITE_PROGRAM_EEPROM() , WRITE_PROGRAM_MEMORY(), External Memory Overview

setup_high_speed_adc( )

Syntax:	**setup_high_speed_adc (*mode*);**
Parameters:	**mode** – Analog to digital mode. The valid options vary depending on the device. See the devices .h file for all options. Some typical options include: ▪ ADC_OFF ▪ ADC_CLOCK_DIV_1 ▪ ADC_HALT_IDLE – The ADC will not run when PIC is idle.
Returns:	Undefined
Function:	Configures the High-Speed ADC clock speed and other High-Speed ADC options including, when the ADC interrupts occurs, the output result format, the conversion order, whether the ADC pair is sampled sequentially or simultaneously, and whether the dedicated sample and hold is continuously sampled or samples when a trigger event occurs.
Availability:	Only on dsPIC33FJxxGSxxx devices.
Requires:	Constants are define in the device .h file.

Examples:	`setup_high_speed_adc_pair(0, INDIVIDUAL_SOFTWARE_TRIGGER);`
	`setup_high_speed_adc(ADC_CLOCK_DIV_4);`
	`read_high_speed_adc(0, START_AND_READ, result);`
	`setup_high_speed_adc(ADC_OFF);`

Example Files:	None
Also See:	setup_high_speed_adc_pair(), read_high_speed_adc(), high_speed_adc_done()

setup_high_speed_adc_pair( )

Syntax:	**setup_high_speed_adc_pair(*pair, mode*);**
Parameters:	**pair** – The High-Speed ADC pair number to setup, valid values are 0 to total number of ADC pairs. 0 sets up ADC pair AN0 and AN1, 1 sets up ADC pair AN2 and AN3, etc. **mode** – ADC pair mode. The valid options vary depending on the device. See the devices .h file for all options. Some typical options include: ▪ INDIVIDUAL_SOFTWARE_TRIGGER ▪ GLOBAL_SOFTWARE_TRIGGER ▪ PWM_PRIMARY_SE_TRIGGER ▪ PWM_GEN1_PRIMARY_TRIGGER ▪ PWM_GEN2_PRIMARY_TRIGGER
Returns:	Undefined

Function:	Sets up the analog pins and trigger source for the specified ADC pair. Also sets up whether ADC conversion for the specified pair triggers the common ADC interrupt. If zero is passed for the second parameter the corresponding analog pins will be set to digital pins.
Availability:	Only on dsPIC33FJxxGSxxx devices.
Requires:	Constants are define in the device .h file.

Examples:	`setup_high_speed_adc_pair(0, INDIVIDUAL_SOFTWARE_TRIGGER);`
	
	`setup_high_speed_adc_pair(1, GLOBAL_SOFTWARE_TRIGGER);`
	
	`setup_high_speed_adc_pair(2, 0) - sets AN4 and AN5 as digital pins.`

Example Files:	None
Also See:	setup_high_speed_adc(), read_high_speed_adc(), high_speed_adc_done()

setup_hspwm_blanking( )

Syntax:	**setup_hspwm_blanking(**unit, settings, delay**);**
Parameters:	**unit** - The High Speed PWM unit to set. **start_delay** - Optional value from 0 to 63 specifying then umber of PWM cycles to wait before generating the first trigger event. For some devices, one of the following may be optional or'd in with the value: · HSPWM_COMBINE_PRIMARY_AND_SECONDARY_TRIGGER · HSPWM_SEPERATE_PRIMARY_AND_SECONDARY_TRIGGER **divider** - optional value from 1 to 16 specifying the trigger event divisor. **trigger_value** - optional 16-bit value specifying the primary trigger compare time. **strigger_value** - optional 16-bit value specifying the secondary trigger compare time. Not available on all devices, see the device datasheet for availability.
Returns:	undefined
Function:	Sets up the High Speed PWM Trigger event.
Availability:	Only on devices with a built-in High Speed PWM module (dsPIC33FJxxGSxxx, dsPIC33EPxxxMUxxx, dsPIC33EPxxxMCxxx, and dsPIC33EVxxxGMxxx devices)
Requires:	None
Examples:	`setup_hspwm_trigger(1, 10, 1, 0x2000);`
Example Files:	None
Also See:	setup_hspwm_unit(), set_hspwm_phase(), set_hspwm_duty(), set_hspwm_event(),

	setup_hspwm_trigger(), set_hspwm_override(), get_hspwm_capture(), setup_hspwm_chop_clock(), setup_hspwm_unit_chop_clock() setup_hspwm(), setup_hspwm_secondary()

setup_hspwm_chop_clock( )

Syntax:	**setup_hspwm_chop_clock(**settings**);**
Parameters:	**settings** - a value from 1 to 1024 to set the chop clock divider. Also one of the following can be or'd with the value: · HSPWM_CHOP_CLK_GENERATOR_ENABLED · HSPWM_CHOP_CLK_GENERATOR_DISABLED
Returns:	Undefined
Function:	Setup and High Speed PWM Chop Clock Generator and divisor.
Availability:	Only on devices with a built-in High Speed PWM module (dsPIC33FJxxGSxxx, dsPIC33EPxxxMUxxx, dsPIC33EPxxxMCxxx, and dsPIC33EVxxxGMxxx devices)
Requires:	None
Examples:	`setup_hspwm_chop_clock(HSPWM_CHOP_CLK_GENERATOR_ENABLED|32);`
Example Files:	None
Also See:	setup_hspwm_unit(), set_hspwm_phase(), set_hspwm_duty(), set_hspwm_event(), setup_hspwm_blanking(), setup_hspwm_trigger(), set_hspwm_override(), get_hspwm_capture(), setup_hspwm_unit_chop_clock() setup_hspwm(), setup_hspwm_secondary()

setup_hspwm_trigger( )

Syntax:	**setup_hspwm_trigger(**unit, [start_ delay], [divider], [trigger_value], [strigger_value]**);**
Parameters:	**unit** - The High Speed PWM unit to set. **settings** - Settings to setup the High Speed PWM Leading-Edge Blanking. The valid options vary depending on the device. See the device's header file for all options. Some typical options include: · HSPWM_RE_PWMH_TRIGGERS_LE_BLANKING · HSPWM_FE_PWMH_TRIGGERS_LE_BLANKING · HSPWM_RE_PWML_TRIGGERS_LE_BLANKING · HSPWM_FE_PWML_TRIGGERS_LE_BLANKING · HSPWM_LE_BLANKING_APPLIED_TO_FAULT_INPUT · HSPWM_LE_BLANKING_APPLIED_TO_CURRENT_LIMIT_INPUT

	delay - 16-bit constant or variable to specify the leading-edge blanking time.
Returns:	undefined
Function:	Sets up the Leading-Edge Blanking and leading-edge blanking time of the High Speed PWM.
Availability:	Only on devices with a built-in High Speed PWM module (dsPIC33FJxxGSxxx, dsPIC33EPxxxMUxxx, dsPIC33EPxxxMCxxx, and dsPIC33EVxxxGMxxx devices)
Requires:	None
Examples:	`setup_hspwm_blanking(HSPWM_RE_PWMH_TRIGGERS_LE_BLANKING, 10);`
Example Files:	None
Also See:	setup_hspwm_unit(), set_hspwm_phase(), set_hspwm_duty(), set_hspwm_event(), setup_hspwm_blanking(), set_hspwm_override(), get_hspwm_capture(), setup_hspwm_chop_clock(), setup_hspwm_unit_chop_clock() setup_hspwm(), setup_hspwm_secondary()

setup_hspwm_unit( )

Syntax:	**setup_hspwm_unit(**unit, mode, [dead_time], [alt_dead_time]**);** **set_hspwm_duty(**unit, primary, [secondary]**);**
Parameters:	**unit** - The High Speed PWM unit to set. **mode** - Mode to setup the High Speed PWM unit in. The valid option vary depending on the device. See the device's header file for all options. Some typical options include: · HSPWM_ENABLE · HSPWM_ENABLE_H · HSPWM_ENABLE_L · HSPWM_COMPLEMENTARY · HSPWM_PUSH_PULL **dead_time** - Optional 16-bit constant or variable to specify the dead time for this PWM unit, defaults to 0 if not specified. **alt_dead_time** - Optional 16-bit constant or variable to specify the alternate dead time for this PWM unit, default to 0 if not specified.
Returns:	undefined
Function:	Sets up the specified High Speed PWM unit.
Availability:	Only on devices with a built-in High Speed PWM module (dsPIC33FJxxGSxxx, dsPIC33EPxxxMUxxx, dsPIC33EPxxxMCxxx, and dsPIC33EVxxxGMxxx devices)
Requires:	Constants are defined in the device's .h file
Examples:	`setup_hspwm_unit(1,HSPWM_ENABLE|SHPWM_COMPLEMENTARY, 100,100);`
Example	None

Files:	
Also See:	set_hspwm_phase(), set_hspwm_duty(), set_hspwm_event(), setup_hspwm_blanking(), setup_hspwm_trigger(), set_hspwm_override(), get_hspwm_capture(), setup_hspwm_chop_clock(), setup_hspwm_unit_chop_clock() setup_hspwm(), setup_hspwm_secondary()

setup_hspwm( )

setup_hspwm_secondary( )

Syntax:	**setup_hspwm(**mode, value**);** **setup_hspwm_secondary(**mode, value**);** **//if available**
Parameters:	**mode** - Mode to setup the High Speed PWM module in. The valid options vary depending on the device. See the device's .h file for all options. Some typical options include: · HSPWM_ENABLED · HSPWM_HALT_WHEN_IDLE · HSPWM_CLOCK_DIV_1 **value** - 16-bit constant or variable to specify the time bases period.
Returns:	undefined
Function:	To enable the High Speed PWM module and set up the Primary and Secondary Time base of the module.
Availability:	Only on devices with a built-in High Speed PWM module (dsPIC33FJxxGSxxx, dsPIC33EPxxxMUxxx, dsPIC33EPxxxMCxxx, and dsPIC33EVxxxGMxxx devices)
Requires:	Constants are defined in the device's .h file
Examples:	`setup_hspwm(HSPWM_ENABLED | HSPWM_CLOCK_DIV_BY4, 0x8000);`
Example Files:	None
Also See:	setup_hspwm_unit(), set_hspwm_phase(), set_hspwm_duty(), set_hspwm_event(), setup_hspwm_blanking(), setup_hspwm_trigger(), set_hspwm_override(), get_hspwm_capture(), setup_hspwm_chop_clock(), setup_hspwm_unit_chop_clock() setup_hspwm_secondary()

setup_hspwm_unit_chop_clock( )

Syntax:	**setup_hspwm_unit_chop_clock(**unit, settings**);**
Parameters:	**unit** - the High Speed PWM unit chop clock to setup. **settings** - a settings to setup the High Speed PWM unit chop clock. The valid options vary depending on the device. See the device's .h file for all options. Some typical options include: · HSPWM_PWMH_CHOPPING_ENABLED · HSPWM_PWML_CHOPPING_ENABLED

	· HSPWM_CHOPPING_DISABLED · HSPWM_CLOP_CLK_SOURCE_PWM2H · HSPWM_CLOP_CLK_SOURCE_PWM1H · HSPWM_CHOP_CLK_SOURCE_CHOP_CLK_GENERATOR
Returns:	Undefined
Function:	Setup and High Speed PWM unit's Chop Clock
Availability:	Only on devices with a built-in High Speed PWM module (dsPIC33FJxxGSxxx, dsPIC33EPxxxMUxxx, dsPIC33EPxxxMCxxx, and dsPIC33EVxxxGMxxx devices)
Requires:	None

Examples:	`setup_hspwm_unit_chop_clock(1,HSPWM_PWMH_CHOPPING_ENABLED|`
	`HSPWM_PWML_CHOPPIJNG_ENABLED|`
	`HSPWM_CLOP_CLK_SOURCE_PWM2H);`

Example Files:	None
Also See:	setup_hspwm_unit(), set_hspwm_phase(), set_hspwm_duty(), set_hspwm_event(), setup_hspwm_blanking(), setup_hspwm_trigger(), set_hspwm_override(), get_hspwm_capture(), setup_hspwm_chop_clock(), setup_hspwm(), setup_hspwm_secondary()

setup_lcd( )

Syntax:	**setup_lcd (***mode***,** *prescale***, [***segments0_31***]**,[segments32_47]**);**
Parameters:	***Mode*** may be any of the following constants to enable the LCD and may be or'ed with other constants in the devices **.h* file: • LCD_DISABLED, LCD_STATIC, LCD_MUX12, LCD_MUX13, LCD_MUX14 See the devices *.h* file for other device specific options. ***Prescale*** may be 1-16 for the LCD clock**.** ***Segments0-31*** may be any of the following constants or'ed together when using the PIC16C92X series of chips:: • SEG0_4, SEG5_8, SEG9_11, SEG12_15, SEG16_19, SEG20_26, SEG27_28, SEG29_31 ALL_LCD_PINS When using the PIC16F/LF1xxx or PIC18F/LFxxxx series of chips, each of the segments are enabled individually. A value of 1 will enable the segment, 0 will disable it and use the pin for normal I/O operation. **Segments 32-47** when using a chip with more than 32 segments, this enables segments 32-47. A value 1 will enable the segment, 0 will disable it. Bit 0 corresponds to segment 32 and bit 15 corresponds to segment 47.
Returns:	undefined.
Function:	This function is used to initialize the LCD Driver Module on the PIC16C92X and PIC16F/LF193X series of chips.

Availability:	Only on devices with built-in LCD Driver Module hardware.
Requires	Constants are defined in the devices *.h file.

Examples:	· `setup_lcd( LCD_MUX14 | LCD_STOP_ON_SLEEP, 2, ALL_LCD_PINS );`
	`// PIC16C92X`
	· `setup_lcd( LCD_MUX13 | LCD_REF_ENABLED | LCD_B_HIGH_POWER, 0, 0xFF0429);`
	`// PIC16F/LF193X - Enables Segments 0, 3, 5, 10, 16, 17, 18, 19, 20, 21, 22, 23`

Example Files:	ex_92lcd.c
Also See:	lcd_symbol(), lcd_load(), lcd_contrast( ), Internal LCD Overview

setup_low_volt_detect( )

Syntax:	**setup_low_volt_detect(**mode**)**
Parameters:	**mode** may be one of the constants defined in the devices .h file. LVD_LVDIN, LVD_45, LVD_42, LVD_40, LVD_38, LVD_36, LVD_35, LVD_33, LVD_30, LVD_28, LVD_27, LVD_25, LVD_23, LVD_21, LVD_19 One of the following may be or'ed(via |) with the above if high voltage detect is also available in the device LVD_TRIGGER_BELOW, LVD_TRIGGER_ABOVE
Returns:	undefined
Function:	This function controls the high/low voltage detect module in the device. The mode constants specifies the voltage trip point and a direction of change from that point (available only if high voltage detect module is included in the device). If the device experiences a change past the trip point in the specified direction the interrupt flag is set and if the interrupt is enabled the execution branches to the interrupt service routine.
Availability:	This function is only available with devices that have the high/low voltage detect module.
Requires	Constants are defined in the devices.h file.
Examples:	`setup_low_volt_detect( LVD_TRIGGER_BELOW | LVD_36 );` This would trigger the interrupt when the voltage is below 3.6 volts

setup_nco( )

Syntax:	**setup_nco(**settings**,**inc_value**)**
Parameters:	**settings**- setup of the NCO module. See the device's .h file for all options. Some typical options include: · NCO_ENABLE · NCO_OUTPUT

	· NCO_PULSE_FREQ_MODE · NCO_FIXED_DUTY_MODE **inc_value**- int16 value to increment the NCO 20 bit accumulator by.
Returns:	Undefined
Function:	Sets up the NCO module and sets the value to increment the 20-bit accumulator by.
Availability:	On devices with a NCO module.
Examples:	`setup_nco(NCO_ENABLED|NCO_OUTPUT|NCO_FIXED_DUTY_MODE|` `NCO_CLOCK_FOSC,8192);`
Example Files:	None
Also See:	get_nco_accumulator( ), set_nco_inc_value( ), get_nco_inc_value( )

setup_opamp1( ) setup_opamp2( )

Syntax:	**setup_opamp1(***enabled***)** **setup_opamp2(***enabled***)**
Parameters:	***enabled*** can be either TRUE or FALSE.
Returns:	undefined
Function:	Enables or Disables the internal operational amplifier peripheral of certain PICmicros.
Availability:	Only parts with a built-in operational amplifier (for example, PIC16F785).
Requires:	Only parts with a built-in operational amplifier (for example, PIC16F785).
Examples:	`setup_opamp1(TRUE);` `setup_opamp2(boolean_flag);`
Example Files:	None
Also See:	None

setup_opamp1( ) setup_opamp2( )

Syntax:	**setup_opamp1(***enabled***)** **setup_opamp2(***enabled***)**
Parameters:	***enabled*** can be either TRUE or FALSE.
Returns:	undefined
Function:	Enables or Disables the internal operational amplifier peripheral of certain PICmicros.
Availability:	Only parts with a built-in operational amplifier (for example, PIC16F785).

Requires:	Only parts with a built-in operational amplifier (for example, PIC16F785).
Examples:	`setup_opamp1(TRUE);` `setup_opamp2(boolean_flag);`
Example Files:	None
Also See:	None

setup_oscillator( )

Syntax:	**setup_oscillator(***mode***,** *finetune***)**
Parameters:	***mode*** is dependent on the chip. For example, some chips allow speed setting such as OSC_8MHZ or OSC_32KHZ. Other chips permit changing the source like OSC_TIMER1. The ***finetune*** (only allowed on certain parts) is a signed int with a range of -31 to +31.
Returns:	Some chips return a state such as OSC_STATE_STABLE to indicate the oscillator is stable .
Function:	This function controls and returns the state of the internal RC oscillator on some parts. See the devices .h file for valid options for a particular device. Note that if INTRC or INTRC_IO is specified in #fuses and a #USE DELAY is used for a valid speed option, then the compiler will do this setup automatically at the start of main(). WARNING: If the speed is changed at run time the compiler may not generate the correct delays for some built in functions. The last #USE DELAY encountered in the file is always assumed to be the correct speed. You can have multiple #USE DELAY lines to control the compilers knowledge about the speed.
Availability:	Only parts with a OSCCON register.
Requires:	Constants are defined in the .h file.
Examples:	`setup_oscillator( OSC_2MHZ );`
Example Files:	None
Also See:	#FUSES, Internal oscillator Overview

setup_pid( )

Syntax:	**setup_pid(,pde.[**mode**,[**K1**],[**K2**],[**K3**]);**
Parameters:	**mode**- the setup of the PID module. The options for setting up the module are defined in the device's header file as: · PID_MODE_PID · PID_MODE_SIGNED_ADD_MULTIPLY_WITH_ACCUMULATION · PID_MODE_SIGNED_ADD_MULTIPLY · PID_MODE_UNSIGNED_ADD_MULTIPLY_WITH_ACCUMULATION · PID_MODE_UNSIGNED_ADD_MULTIPLY · PID_OUTPUT_LEFT_JUSTIFIED

	· PID_OUTPUT_RIGHT_JUSTIFIED **K1** - optional parameter specifying the K1 coefficient, defaults to zero if not specified. The K1 coefficient is used in the PID and ADD_MULTIPLY modes. When in PID mode the K1 coefficient can be calculated with the following formula: · K1 = Kp + Ki * T + Kd/T When in one of the ADD_MULTIPLY modes K1 is the multiple value. **K2** - optional parameter specifying the K2 coefficient, defaults to zero if not specified. The K2 coefficient is used in the PID mode only and is calculated with the following formula: · K2 = -(Kp + 2Kd/T) **K3** - optional parameter specifying the K3 coefficient, defaults to zero if not specified. The K3 coefficient is used in the PID mode, only and is calculated with the following formula: · K3 = Kd/T T is the sampling period in the above formulas.
Returns:	Nothing
Function:	To setup the Proportional Integral Derivative (PID) module, and to set the input coefficients (K1, K2 and K3).
Availability:	All devices with a PID module.
Requires:	Constants are defined in the device's .h file.
Examples:	`setup_pid(PID_MODE_PID, 10, -3, 50);`
Example Files:	None
Also See:	pid_get_result(), pid_read(), pid_write(), pid_busy()

setup_pmp(option,address_mask)

Syntax:	**setup_pmp(***options,address_mask***);**
Parameters:	**options**- The mode of the Parallel Master Port that allows to set the Master Port mode, read-write strobe options and other functionality of the PMPort module. See the device's .h file for all options. Some typical options include: · PAR_PSP_AUTO_INC · PAR_CONTINUE_IN_IDLE · PAR_INTR_ON_RW //Interrupt on read write · PAR_INC_ADDR //Increment address by 1 every //read/write cycle · PAR_MASTER_MODE_1 //Master Mode 1 · PAR_WAITE4 //4 Tcy Wait for data hold after // strobe **address_mask**- this allows the user to setup the address enable register with a 16-bit value. This value determines which address lines are active from the available 16 address lines PMA0:PMA15.

Returns:	Undefined.
Function:	Configures various options in the PMP module. The options are present in the device's .h file and they are used to setup the module. The PMP module is highly configurable and this function allows users to setup configurations like the Slave module, Interrupt options, address increment/decrement options, Address enable bits, and various strobe and delay options.
Availability:	Only the devices with a built-in Parallel Master Port module.
Requires:	Constants are defined in the device's .h file.
Examples:	`setup_psp(PAR_ENABLE| PAR_MASTER_MODE_1|PAR_ STOP_IN_IDLE,0x00FF);` `//Sets up Master mode with address //lines PMA0:PMA7`
Example Files:	None
Also See:	setup_pmp( ), pmp_address( ), pmp_read( ), psp_read( ), psp_write( ), pmp_write( ), psp_output_full( ), psp_input_full( ), psp_overflow( ), pmp_output_full( ), pmp_input_full( ), pmp_overflow( ) See header file for device selected

setup_power_pwm( )

Syntax:	**setup_power_pwm(***modes***,** *postscale***,** *time_base***,** *period***,** *compare***,** *compare_postscale***,** *dead_time***)**
Parameters:	***modes*** values may be up to one from each group of the following: PWM_CLOCK_DIV_4, PWM_CLOCK_DIV_16, PWM_CLOCK_DIV_64, PWM_CLOCK_DIV_128 PWM_DISABLED, PWM_FREE_RUN, PWM_SINGLE_SHOT, PWM_UP_DOWN, PWM_UP_DOWN_INT PWM_OVERRIDE_SYNC PWM_UP_TRIGGER, PWM_DOWN_TRIGGER PWM_UPDATE_DISABLE, PWM_UPDATE_ENABLE PWM_DEAD_CLOCK_DIV_2, PWM_DEAD_CLOCK_DIV_4, PWM_DEAD_CLOCK_DIV_8, PWM_DEAD_CLOCK_DIV_16 ***postscale*** is an integer between 1 and 16. This value sets the PWM time base output postscale. ***time_base*** is an integer between 0 and 65535. This is the initial value of the PWM base ***period*** is an integer between 0 and 4095. The PWM time base is incremented until it reaches this number. ***compare*** is an integer between 0 and 255. This is the value that the PWM time base is

	compared to, to determine if a special event should be triggered. ***compare_postscale*** is an integer between 1 and 16. This postscaler affects compare, the special events trigger. ***dead_time*** is an integer between 0 and 63. This value specifies the length of an off period that should be inserted between the going off of a pin and the going on of it is a complementary pin.
Returns:	undefined
Function:	Initializes and configures the motor control Pulse Width Modulation (PWM) module.
Availability:	All devices equipped with motor control or power PWM module.
Requires:	None
Examples:	`setup_power_pwm(PWM_CLOCK_DIV_4 | PWM_FREE_RUN |` `  PWM_DEAD_CLOCK_DIV_4,1,10000,1000,0,1,0);`
Example Files:	None
Also See:	set_power_pwm_override(), setup_power_pwm_pins(), set_power_pwmX_duty()

setup_power_pwm_pins( )

Syntax:	**setup_power_pwm_pins(**module**0,**module**1,**module**2,**module**3)**
Parameters:	For each module (two pins) specify: PWM_PINS_DISABLED, PWM_ODD_ON, PWM_BOTH_ON, PWM_COMPLEMENTARY
Returns:	undefined
Function:	Configures the pins of the Pulse Width Modulation (PWM) device.
Availability:	All devices equipped with a power control PWM.
Requires:	None

Examples:	`setup_power_pwm_pins(PWM_PINS_DISABLED, PWM_PINS_DISABLED,`
	`PWM_PINS_DISABLED,`
	`  PWM_PINS_DISABLED);`
	`setup_power_pwm_pins(PWM_COMPLEMENTARY,`
	`  PWM_COMPLEMENTARY, PWM_PINS_DISABLED, PWM_PINS_DISABLED);`

Example Files:	None
Also See:	setup_power_pwm(), set_power_pwm_override(),set_power_pwmX_duty()

setup_psp(option,address_mask)

Syntax:	**setup_psp (***options,address_mask***);**

	setup_psp(*options***);**
Parameters:	***Option***- The mode of the Parallel slave port. This allows to set the slave port mode, read-write strobe options and other functionality of the PMP/EPMP module. See the devices .h file for all options. Some typical options include: · PAR_PSP_AUTO_INC · PAR_CONTINUE_IN_IDLE · PAR_INTR_ON_RW //Interrupt on read write · PAR_INC_ADDR //Increment address by 1 every //read/write cycle · PAR_WAITE4 //4 Tcy Wait for data hold after //strobe ***address_mask***- This allows the user to setup the address enable register with a 16 bit or 32 bit (EPMP) value. This value determines which address lines are active from the available 16 address lines PMA0: PMA15 or 32 address lines PMAO:PMA31 (EPMP only).
Returns:	Undefined.
Function:	Configures various options in the PMP/EPMP module. The options are present in the device.h file and they are used to setup the module. The PMP/EPMP module is highly configurable and this function allows users to setup configurations like the Slave mode, Interrupt options, address increment/decrement options, Address enable bits and various strobe and delay options.
Availability:	Only the devices with a built in Parallel Port module or Enhanced Parallel Master Port module.
Requires:	Constants are defined in the devices .h file.

Examples:	`setup_psp(PAR_PSP_AUTO_INC| //Sets up legacy slave`
	`//mode with`
	`PAR_STOP_IN_IDLE,0x00FF ); //read and write buffers`
	`//auto increment.`

Example Files:	None
Also See:	psp_output_full(), psp_input_full(), psp_overflow(), See header file for device selected.

setup_pwm1( ) setup_pwm2( ) setup_pwm3( ) setup_pwm4( )

Syntax:	**setup_pwm1(**settings**);** **setup_pwm2(**settings**);** **setup_pwm3(**settings**);** **setup_pwm4(**settings**);**
Parameters:	**settings**- setup of the PWM module. See the device's .h file for all options. Some typical options include: · PWM_ENABLED · PWM_OUTPUT · PWM_ACTIVE_LOW
Returns:	Undefined

Function:	Sets up the PWM module.
Availability:	On devices with a PWM module.
Examples:	`setup_pwm1(PWM_ENABLED|PWM_OUTPUT);`
Example Files:	None
Also See:	set_pwm_duty( )

setup_qei( )

Syntax:	**setup_qei(** *options, filter, maxcount* **);**
Parameters:	***Options***- The mode of the QEI module. See the devices .h file for all options Some common options are: ・QEI_MODE_X2 ・QEI_MODE_X4 ***filter*** - This parameter is optional, the user can enable the digital filters and specify the clock divisor. ***maxcount*** - Specifies the value at which to reset the position counter.
Returns:	void
Function:	Configures the Quadrature Encoder Interface. Various settings like mode and filters can be setup.
Availability:	Devices that have the QEI module.
Requires:	Nothing.
Examples:	`setup_qei(QEI_MODE_X2|QEI_RESET_WHEN_MAXCOUNT,` `QEI_FILTER_ENABLE_QEA|QEI_FILTER_DIV_2,0x1000);`
Example Files:	None
Also See:	qei_set_count() , qei_get_count() , qei_status()

setup_rtc( )

Syntax:	**setup_rtc() (***options, calibration***);**
Parameters:	***Options***- The mode of the RTCC module. See the devices .h file for all options ***Calibration***- This parameter is optional and the user can specify an 8 bit value that will get written to the calibration configuration register.

Returns:	void
Function:	Configures the Real Time Clock and Calendar module. The module requires an external 32.768 kHz clock crystal for operation.
Availability:	Devices that have the RTCC module.
Requires:	Nothing.
Examples:	`setup_rtc(RTC_ENABLE | RTC_OUTPUT SECONDS, 0x00);` `// Enable RTCC module with seconds clock and no calibration`
Example Files:	None
Also See:	rtc_read(), rtc_alarm_read(), rtc_alarm_write(), setup_rtc_alarm(), rtc_write(, setup_rtc()

setup_rtc_alarm( )

Syntax:	**setup_rtc_alarm(***options***,** *mask***,** *repeat***);**
Parameters:	***options***- The mode of the RTCC module. See the devices .h file for all options ***mask***- specifies the alarm mask bits for the alarm configuration. ***repeat***- Specifies the number of times the alarm will repeat. It can have a max value of 255.
Returns:	void
Function:	Configures the alarm of the RTCC module.
Availability:	Devices that have the RTCC module.
Requires:	Nothing.
Examples:	`setup_rtc_alarm(RTC_ALARM_ENABLE, RTC_ALARM_HOUR, 3);`
Example Files:	None
Also See:	rtc_read(), rtc_alarm_read(), rtc_alarm_write(), setup_rtc_alarm(), rtc_write(), setup_rtc()

setup_sd_adc( )

Syntax:	**setup_sd_adc(settings1, settings 2, settings3);**
Parameters:	***settings1***- settings for the SD1CON1 register of the SD ADC module. See the device's *.h* file for all options. Some options include: 1 SDADC_ENABLED 2 SDADC_NO_HALT 3 SDADC_GAIN_1 4 SDADC_NO_DITHER

	5 SDADC_SVDD_SVSS 6 SDADC_BW_NORMAL ***settings2***- settings for the SD1CON2 register of the SD ADC module. See the device's *.h* file for all options. Some options include: 7 SDADC_CHOPPING_ENABLED 8 SDADC_INT_EVERY_SAMPLE 9 SDADC_RES_UPDATED_EVERY_INT 10 SDADC_NO_ROUNDING ***settings3***- settings for the SD1CON3 register of the SD ADC module. See the device's *.h* file for all options. Some options include: 11 SDADC_CLOCK_DIV_1 12 SDADC_OSR_1024 13 SDADC_CLK_SYSTEM
Returns:	Nothing
Function:	To setup the Sigma-Delta Analog to Digital Converter (SD ADC) module.
Availability:	Only devices with a SD ADC module.
Examples:	setup_sd_adc(SDADC_ENABLED | SDADC_DITHER_LOW, SDADC_CHOPPING_ENABLED | SDADC_INT_EVERY_5TH_SAMPLE | SDADC_RES_UPDATED_EVERY_INT, SDADC_CLK_SYSTEM | SDADC_CLOCK_DIV_4);
Example Files:	None
Also See:	set_sd_adc_channel(), read_sd_adc(), set_sd_adc_calibration()

setup_smtx( )

Syntax:	**setup_smt1(**mode,[period]**);** **setup_smt2(**mode,[period]**);**
Parameters:	**mode** - The setup of the SMT module. See the device's .h file for al typical options include: SMT_ENABLED SMT_MODE_TIMER SMT_MODE_GATED_TIMER SMT_MODE_PERIOD_DUTY_CYCLE_ACQ **period** - Optional parameter for specifying the overflow value of the to maximum value if not specified.
Returns:	Nothing
Function:	Configures the Signal Measurement Timer (SMT) module.
Availability:	Only devices with a built-in SMT module.
Examples:	`setup_smt1(SMT_ENABLED | SMT_MODE_PERIOD_DUTY_CYCLE_ACQ| SMT_REPEAT_DATA_ACQ_MODE | SMT_CLK_FOSC);`
Example Files:	None

Also See:	smtx_status(), stmx_start(), smtx_stop(), smtx_update(), smtx_res smtx_read(), smtx_write()

setup_spi( ) setup_spi2( )

Syntax:	**setup_spi (***mode***)** **setup_spi2 (***mode***)**
Parameters:	***mode*** may be: • SPI_MASTER, SPI_SLAVE, SPI_SS_DISABLED • SPI_L_TO_H, SPI_H_TO_L • SPI_CLK_DIV_4, SPI_CLK_DIV_16, • SPI_CLK_DIV_64, SPI_CLK_T2 • SPI_SAMPLE_AT_END, SPI_XMIT_L_TO_H • Constants from each group may be or'ed together with |.
Returns:	undefined
Function:	Initializes the Serial Port Interface (SPI). This is used for 2 or 3 wire serial devices that follow a common clock/data protocol.
Also See:	spi_write(), spi_read(), spi_data_is_in(), SPI Overview

setup_timer_A( )

Syntax:	**setup_timer_A (**mode**);**
Parameters:	***mode*** values may be: · TA_OFF, TA_INTERNAL, TA_EXT_H_TO_L, TA_EXT_L_TO_H · TA_DIV_1, TA_DIV_2, TA_DIV_4, TA_DIV_8, TA_DIV_16, TA_DIV_32, TA_DIV_64, TA_DIV_128, TA_DIV_256 · constants from different groups may be or'ed together with |.
Returns:	undefined
Function:	sets up Timer A.
Availability:	This function is only available on devices with Timer A hardware.
Requires:	Constants are defined in the device's .h file.

Examples:	`setup_timer_A(TA_OFF);`
	`setup_timer_A(TA_INTERNAL | TA_DIV_256);`
	`setup_timer_A(TA_EXT_L_TO_H | TA_DIV_1);`

Example Files:	none
Also See:	get_timerA( ), set_timerA( ), TimerA Overview

setup_timer_B( )

Syntax:	**setup_timer_B (**mode**);**
Parameters:	***mode*** values may be: · TB_OFF, TB_INTERNAL, TB_EXT_H_TO_L, TB_EXT_L_TO_H · TB_DIV_1, TB_DIV_2, TB_DIV_4, TB_DIV_8, TB_DIV_16, TB_DIV_32, TB_DIV_64, TB_DIV_128, TB_DIV_256 · constants from different groups may be or'ed together with |.
Returns:	undefined
Function:	sets up Timer B
Availability:	This function is only available on devices with Timer B hardware.
Requires:	Constants are defined in device's .h file.

Examples:	`setup_timer_B(TB_OFF);`
	`setup_timer_B(TB_INTERNAL | TB_DIV_256);`
	`setup_timer_B(TA_EXT_L_TO_H | TB_DIV_1);`

Example Files:	none
Also See:	get_timerB( ), set_timerB( ), TimerB Overview

setup_timer_0( )

Syntax:	**setup_timer_0 (***mode***)**
Parameters:	***mode*** may be one or two of the constants defined in the devices .h file. RTCC_INTERNAL, RTCC_EXT_L_TO_H or RTCC_EXT_H_TO_L RTCC_DIV_2, RTCC_DIV_4, RTCC_DIV_8, RTCC_DIV_16, RTCC_DIV_32, RTCC_DIV_64, RTCC_DIV_128, RTCC_DIV_256 PIC18XXX only: RTCC_OFF, RTCC_8_BIT One constant may be used from each group or'ed together with the | operator.
Returns:	undefined
Function:	Sets up the timer 0 (aka RTCC).
Warning:	On older PIC16 devices, set-up of the prescaler may undo the WDT prescaler.
Availability:	All devices.
Requires:	Constants are defined in the devices .h file.
Examples:	`setup_timer_0 (RTCC_DIV_2|RTCC_EXT_L_TO_H);`
Example Files:	
Also See:	get_timer0(), set_timer0(), setup_counters()

setup_timer_1( )

Syntax:	**setup_timer_1 (*mode*)**
Parameters:	***mode*** values may be: • T1_DISABLED, T1_INTERNAL, T1_EXTERNAL, T1_EXTERNAL_SYNC • T1_CLK_OUT • T1_DIV_BY_1, T1_DIV_BY_2, T1_DIV_BY_4, T1_DIV_BY_8 • constants from different groups may be or'ed together with |.
Returns:	undefined
Function:	Initializes timer 1. The timer value may be read and written to using SET_TIMER1() and GET_TIMER1()Timer 1 is a 16 bit timer. With an internal clock at 20mhz and with the T1_DIV_BY_8 mode, the timer will increment every 1.6us. It will overflow every 104.8576ms.
Availability:	This function is only available on devices with timer 1 hardware.
Requires:	Constants are defined in the devices .h file.

Examples:	`setup_timer_1 ( T1_DISABLED );`
	`setup_timer_1 ( T1_INTERNAL | T1_DIV_BY_4 );`
	`setup_timer_1 ( T1_INTERNAL | T1_DIV_BY_8 );`

Example Files:	
Also See:	get_timer1(), set_timer1() , Timer1 Overview

setup_timer_2( )

Syntax:	**setup_timer_2 (*mode, period, postscale*)**
Parameters:	***mode*** may be one of: • T2_DISABLED • T2_DIV_BY_1, T2_DIV_BY_4, T2_DIV_BY_16 Period is a int 0-255 that determines when the clock value is reset Postscale is a number 1-16 that determines how many timer overflows before an interrupt: (1 means once, 2 means twice, an so on)
Returns:	undefined
Function:	Initializes timer 2. The mode specifies the clock divisor (from the oscillator clock). The timer value may be read and written to using GET_TIMER2() and SET_TIMER2(). 2 is a 8-bit counter/timer.
Availability:	This function is only available on devices with timer 2 hardware.
Requires:	Constants are defined in the devices .h file.
Examples:	`setup_timer_2 ( T2_DIV_BY_4, 0xc0, 2)  //at 20mhz, the timer will`

```
//increment every 800ns
//will overflow every 154.4us,
//and will interrupt every
308.us
```

Example Files:	
Also See:	get_timer2(), set_timer2() , Timer2 Overview

setup_timer_3( )

Syntax:	**setup_timer_3 (*mode*)**
Parameters:	***Mode*** may be one of the following constants from each group or'ed (via |) together: • T3_DISABLED, T3_INTERNAL, T3_EXTERNAL, T3_EXTERNAL_SYNC • T3_DIV_BY_1, T3_DIV_BY_2, T3_DIV_BY_4, T3_DIV_BY_8
Returns:	undefined
Function:	Initializes timer 3 or 4.The mode specifies the clock divisor (from the oscillator clock). The timer value may be read and written to using GET_TIMER3() and SET_TIMER3(). Timer 3 is a 16 bit counter/timer.
Availability:	This function is only available on devices with timer 3 hardware.
Requires:	Constants are defined in the devices .h file.
Examples:	`setup_timer_3 (T3_INTERNAL | T3_DIV_BY_2);`
Example Files:	None
Also See:	get_timer3(), set_timer3()

setup_timer_4( )

Syntax:	**setup_timer_4** (mode**,** period**,** postscale**)**
Parameters:	***mode*** may be one of: • T4_DISABLED, T4_DIV_BY_1, T4_DIV_BY_4, T4_DIV_BY_16 ***period*** is a int 0-255 that determines when the clock value is reset, ***postscale*** is a number 1-16 that determines how many timer overflows before an interrupt: (1 means once, 2 means twice, and so on).
Returns:	undefined
Function:	Initializes timer 4. The mode specifies the clock divisor (from the oscillator clock). The timer value may be read and written to using GET_TIMER4() and SET_TIMER4(). Timer 4 is a 8 bit counter/timer.
Availability:	This function is only available on devices with timer 4 hardware.

Requires:	Constants are defined in the devices .h file

Examples:	`setup_timer_4 ( T4_DIV_BY_4, 0xc0, 2);`
	`// At 20mhz, the timer will increment every 800ns,`
	`// will overflow every 153.6us,`
	`// and will interrupt every 307.2us.`

Example Files:	
Also See:	get_timer4(), set_timer4()

setup_timer_5( )

Syntax:	**setup_timer_5 (*mode*)**
Parameters:	**mode** may be one or two of the constants defined in the devices .h file. T5_DISABLED, T5_INTERNAL, T5_EXTERNAL, or T5_EXTERNAL_SYNC T5_DIV_BY_1, T5_DIV_BY_2, T5_DIV_BY_4, T5_DIV_BY_8 T5_ONE_SHOT, T5_DISABLE_SE_RESET, or T5_ENABLE_DURING_SLEEP
Returns:	undefined
Function:	Initializes timer 5. The mode specifies the clock divisor (from the oscillator clock). The timer value may be read and written to using GET_TIMER5() and SET_TIMER5(). Timer 5 is a 16 bit counter/timer.
Availability:	This function is only available on devices with timer 5 hardware.
Requires:	Constants are defined in the devices .h file.
Examples:	`setup_timer_5 (T5_INTERNAL | T5_DIV_BY_2);`
Example Files:	None
Also See:	get_timer5(), set_timer5(), Timer5 Overview

setup_uart( )

Syntax:	**setup_uart(*baud*, *stream*)** **setup_uart(*baud*)** **setup_uart(*baud, stream, clock)***
Parameters:	***baud*** is a constant representing the number of bits per second. A one or zero may also be passed to control the on/off status. ***Stream*** is an optional stream identifier. *Chips with the advanced UART may also use the following constants:* UART_ADDRESS UART only accepts data with 9th bit=1 UART_DATA UART accepts all data *Chips with the EUART H/W may use the following constants:*

	UART_AUTODETECT Waits for 0x55 character and sets the UART baud rate to match. UART_AUTODETECT_NOWAIT Same as above function, except returns before 0x55 is received. KBHIT() will be true when the match is made. A call to GETC() will clear the character. UART_WAKEUP_ON_RDA Wakes PIC up out of sleep when RCV goes from high to low ***clock*** - If specified this is the clock rate this function should assume. The default comes from the #USE DELAY.
Returns:	undefined
Function:	Very similar to SET_UART_SPEED. If 1 is passed as a parameter, the UART is turned on, and if 0 is passed, UART is turned off. If a BAUD rate is passed to it, the UART is also turned on, if not already on.
Availability:	This function is only available on devices with a built in UART.
Requires:	#USE RS232
Examples:	`setup_uart(9600);` `setup_uart(9600, rsOut);`
Example Files:	None
Also See:	#USE RS232, putc(), getc(), RS232 I/O Overview

setup_vref( )

Syntax:	**setup_vref (***mode* **|** *value* **)**
Parameters:	***mode*** may be one of the following constants: • FALSE (off) • VREF_LOW for VDD*VALUE/24 • VREF_HIGH for VDD*VALUE/32 + VDD/4 • any may be or'ed with VREF_A2. ***value*** is an int 0-15.
Also See:	Voltage Reference Overview

setup_wdt( )

Syntax:	**setup_wdt (***mode***)**
Parameters:	Constants like: WDT_18MS, WDT_36MS, WDT_72MS, WDT_144MS,WDT_288MS, WDT_576MS, WDT_1152MS, WDT_2304MS For some parts: WDT_ON, WDT_OFF .
Warning:	On older PIC16 devices, set-up of the prescaler may undo the timer0 prescaler.

Also See:	#FUSES , restart_wdt() , WDT or Watch Dog Timer Overview Internal Oscillator Overview

setup_zdc( )

Syntax:	**setup_zdc(mode);**
Parameters:	**mode**- the setup of the ZDC module. The options for setting up th • ZCD_ENABLED • ZCD_DISABLED • ZCD_INVERTED • ZCD_INT_L_TO_H • ZCD_INT_H_TO_L
Returns:	Nothing
Function:	To set-up the Zero_Cross Detection (ZCD) module.
Availability:	All devices with a ZCD module.
Examples:	`setup_zcd(ZCD_ENABLE|ZCD_INT_H_TO_L);`
Example Files:	None
Also See:	zcd_status()

shift_left( )

Syntax:	**shift_left (***address***,** *bytes***,** *value***)**
Parameters:	***address*** is a pointer to memory. ***bytes*** is a count of the number of bytes to work with ***value*** is a 0 to 1 to be shifted in.
Returns:	0 or 1 for the bit shifted out
Function:	Shifts a bit into an array or structure. The address may be an array identifier or an address to a structure (such as &data). Bit 0 of the lowest byte in RAM is treated as the LSB.
Availability:	All devices
Requires:	Nothing

Examples:	`byte buffer[3];`
	`for(i=0; i<=24; ++i){`
	`  // Wait for clock high`
	`  while (!input(PIN_A2));`

```
   shift_left(buffer,3,input(PIN_A3));
   // Wait for clock low
   while (input(PIN_A2));
}
// reads 24 bits from pin A3,each bit is read
// on a low to high on pin A2
```

Example Files:	ex_extee.c, 9356.c
Also See:	shift_right(), rotate_right(), rotate_left(),

shift_right( )

Syntax:	**shift_right (***address***,** *bytes***,** *value***)**
Parameters:	***address*** is a pointer to memory ***bytes*** is a count of the number of bytes to work with ***value*** is a 0 to 1 to be shifted in.
Returns:	0 or 1 for the bit shifted out
Function:	Shifts a bit into an array or structure. The address may be an array identifier or an address to a structure (such as &data). Bit 0 of the lowest byte in RAM is treated as the LSB.
Availability:	All devices
Requires:	Nothing

Examples:

```
// reads 16 bits from pin A1, each bit is read
// on a low to high on pin A2
struct {
   byte time;
   byte command : 4;
   byte source  : 4;} msg;

for(i=0; i<=16; ++i) {
   while(!input(PIN_A2));
   shift_right(&msg,3,input(PIN_A1));
   while (input(PIN_A2)) ;}

// This shifts 8 bits out PIN_A0, LSB first.
for(i=0;i<8;++i)
   output_bit(PIN_A0,shift_right(&data,1,0));
```

Example Files:	ex_extee.c, 9356.c
Also See:	shift_left(), rotate_right(), rotate_left(),

sleep( )

Syntax:	**sleep(mode)**
Parameters:	***mode*** - for most chips this is not used. Check the device header for special options on some chips.

Returns:	Undefined
Function:	Issues a SLEEP instruction. Details are device dependent. However, in general the part will enter low power mode and halt program execution until woken by specific external events. Depending on the cause of the wake up execution may continue after the sleep instruction. The compiler inserts a sleep() after the last statement in main().
Availability:	All devices
Requires:	Nothing
Examples:	`SLEEP();`
Example Files:	ex_wakup.c
Also See:	reset_cpu()

sleep_ulpwu( )

Syntax:	**sleep_ulpwu(*time*)**
Parameters:	***time*** specifies how long, in us, to charge the capacitor on the ultra-low power wakeup pin (by outputting a high on PIN_A0).
Returns:	undefined
Function:	Charges the ultra-low power wake-up capacitor on PIN_A0 for time microseconds, and then puts the PIC to sleep. The PIC will then wake-up on an 'Interrupt-on-Change' after the charge on the cap is lost.
Availability:	Ultra Low Power Wake-Up support on the PIC (example, PIC12F683)
Requires:	#USE DELAY

Examples:	`while(TRUE)`
	`{`
	`  if (input(PIN_A1))`
	`  //do something`
	`  else`
	`  sleep_ulpwu(10);  //cap will be charged for 10us,`
	`  //then goto sleep`
	`}`

Example Files:	None
Also See:	#USE DELAY

sleep_ulpwu( )

Syntax:	**sleep_ulpwu(*time*)**
Parameters:	***time*** specifies how long, in us, to charge the capacitor on the ultra-low power wakeup pin (by outputting a high on PIN_B0).

Returns:	undefined
Function:	Charges the ultra-low power wake-up capacitor on PIN_B0 for time microseconds, and then puts the PIC to sleep. The PIC will then wake-up on an 'Interrupt-on-Change' after the charge on the cap is lost.
Availability:	Ultra Low Power Wake-Up support on the PIC (example, PIC124F32KA302)
Requires:	#USE DELAY

Examples:	`while(TRUE)`
	`{`
	`  if (input(PIN_A1))`
	`  //do something`
	`  else`
	`  sleep_ulpwu(10);  //cap will be charged for 10us,`
	`  //then goto sleep`
	`}`

Example Files:	None
Also See:	#USE DELAY

smtx_read( )

Syntax:	**value_smt1_read(**which**);** **value_smt2_read(**which**);**
Parameters:	**which** - Specifies which SMT registers to read. The following define in the device's header file to select which registers are read: SMT_CAPTURED_PERIOD_REG SMT_CAPTURED_PULSE_WIDTH_REG SMT_TMR_REG SMT_PERIOD_REG
Returns:	32-bit value
Function:	To read the Capture Period Registers, Capture Pulse Width Registe Timer Registers or Period Registers of the Signal Measurement Tim
Availability:	Only devices with a built-in SMT module.
Examples:	unsigned int32 Period; `Period = smt1_read(SMT_CAPTURED_PERIOD_REG);`
Example Files:	None
Also See:	smtx_status(), stmx_start(), smtx_stop(), smtx_update(), smtx_re setup_SMTx(), smtx_write()

smtx_reset_timer( )

Syntax:	**smt1_reset_timer();** **smt2_reset_timer();**
Parameters:	None
Returns:	Nothing
Function:	To manually reset the Timer Register of the Signal Measureme
Availability:	Only devices with a built-in SMT module.
Examples:	`smt1_reset_timer();`
Example Files:	None
Also See:	setup_smtx(), stmx_start(), smtx_stop(), smtx_update(), smt smtx_read(), smtx_write()

smtx_start( )

Syntax:	**smt1_start();** **smt2_start();**
Parameters:	None
Returns:	Nothing
Function:	To have the Signal Measurement Timer (SMT) module start ac
Availability:	Only devices with a built-in SMT module.
Examples:	`smt1_start();`
Example Files:	None
Also See:	smtx_status(), setup_smtx(), smtx_stop(), smtx_update(), sm smtx_read(), smtx_write()

smtx_status( )

Syntax:	**value = smt1_status();** **value = smt2_status();**
Parameters:	None

Returns:	The status of the SMT module.
Function:	To return the status of the Signal Measurement Timer (SMT)
Availability:	Only devices with a built-in SMT module.
Examples:	`status = smt1 status();`
Example Files:	None
Also See:	setup_smtx(), stmx_start(), smtx_stop(), smtx_update(), sm smtx_read(), smtx_write()

smtx_stop( )

Syntax:	**smt1_stop();** **smt2_stop();**
Parameters:	None
Returns:	Nothing
Function:	Configures the Signal Measurement Timer (SMT) module.
Availability:	Only devices with a built-in SMT module.
Examples:	`smt1 stop()`
Example Files:	None
Also See:	smtx_status(), stmx_start(), setup_smtx(), smtx_update(), sm smtx_read(), smtx_write()

smtx_write( )

Syntax:	**smt1_write(**which,value**);** **smt2_write(**which,value**);**
Parameters:	**which -** Specifies which SMT registers to write. The following defin in the device's header file to select which registers are written: SMT_TMR_REG SMT_PERIOD_REG **value** - The 24-bit value to set the specified registers.
Returns:	Nothing
Function:	To write the Timer Registers or Period Registers of the Signal Meas

	Timer (SMT) module
Availability:	Only devices with a built-in SMT module.
Examples:	`smt1_write(SMT_PERIOD_REG, 0x100000000);`
Example Files:	None
Also See:	smtx_status(), stmx_start(), setup_smtx(), _smtx_update(), smtx_r smtx_read(), setup_smtx()

smtx_update( )

Syntax:	**smt1_update(**which**);** **smt2_update(**which**);**
Parameters:	**which** - Specifies which capture registers to manually update. The following defines have been made in the device's header file to select which registers are updated: SMT_CAPTURED_PERIOD_REG SMT_CAPTURED_PULSE_WIDTH_REG
Returns:	Nothing
Function:	To manually update the Capture Period Registers or the Capture Pulse Width Registers of the Signal Measurement Timer module.
Availability:	Only devices with a built-in SMT module.
Examples:	`smt1_update(SMT_CAPTURED_PERIOD_REG);`
Example Files:	None
Also See:	setup_smtx(), stmx_start(), smtx_stop(), smtx_status(), smtx_reset_timer(), smtx_read(), smtx_write()

spi_data_is_in( ) spi_data_is_in2( )

Syntax:	**result = spi_data_is_in()** **result = spi_data_is_in2()**
Parameters:	None
Returns:	0 (FALSE) or 1 (TRUE)

Function:	Returns TRUE if data has been received over the SPI.
Availability:	This function is only available on devices with SPI hardware.
Requires:	Nothing

Examples:	`( !spi_data_is_in() && input(PIN_B2) );`
	`if( spi_data_is_in() )`
	`data = spi_read();`

Example Files:	None
Also See:	spi_read(), spi_write(), SPI Overview

spi_init()

Syntax:	**spi_init(baud);** **spi_init(stream,baud);**
Parameters:	**stream** – is the SPI stream to use as defined in the STREAM=name option in #USE SPI. **band**- the band rate to initialize the SPI module to. If FALSE it will disable the SPI module, if TRUE it will enable the SPI module to the band rate specified in #use SPI.
Returns:	Nothing.
Function:	Initializes the SPI module to the settings specified in #USE SPI.
Availability:	This function is only available on devices with SPI hardware.
Requires:	#USE SPI

Examples:	`#use spi(MATER, SPI1, baud=1000000, mode=0, stream=SPI1_MODE0)`
	
	`spi_init(SPI1_MODE0, TRUE);  //initialize and enable SPI1 to setting in #USE SPI`
	`spi_init(FALSE); //disable SPI1`
	`spi_init(250000);//initialize and enable SPI1 to a baud rate of 250K`

Example Files:	None
Also See:	#USE SPI, spi_xfer(), spi_xfer_in(), spi_prewrite(), spi_speed()

spi_prewrite(data);

Syntax:	**spi_prewrite(**data**);** **spi_prewrite(**stream**,** data**);**
Parameters:	**stream** – is the SPI stream to use as defined in the STREAM=name option in #USE SPI. **data**- the variable or constant to transfer via SPI
Returns:	Nothing.
Function:	Writes data into the SPI buffer without waiting for transfer to be completed. Can be used in conjunction with spi_xfer() with no parameters to transfer more then 8 bits for PCM and PCH device, or more then 8 bits or 16 bits (XFER16 option) for PCD. Function is useful when using the SSP or SSP2 interrupt service routines for PCM and PCH device, or the SPIx interrupt service routines for PCD device.

Availability:	This function is only available on devices with SPI hardware.
Requires:	#USE SPI, and the option SLAVE is used in #USE SPI to setup PIC as a SPI slave device
Examples:	spi_prewrite(data_out);
Example Files:	ex_spi_slave.c
Also See:	#USE SPI, spi_xfer(), spi_xfer_in(), spi_init(), spi_speed()

spi_read( ) spi_read2( )

Syntax:	**value = spi_read ([*data*])** **value = spi_read2 ([*data*])**
Parameters:	data – optional parameter and if included is an 8 bit int.
Returns:	An 8 bit int
Function:	Return a value read by the SPI. If a value is passed to the spi_read() the data will be clocked out and the data received will be returned. If no data is ready, spi_read() will wait for the data is a SLAVE or return the last DATA clocked in from spi_write(). If this device is the MASTER then either do a spi_write(data) followed by a spi_read() or do a spi_read(data). These both do the same thing and will generate a clock. If there is no data to send just do a spi_read(0) to get the clock. If this device is a SLAVE then either call spi_read() to wait for the clock and data or use_spi_data_is_in() to determine if data is ready.
Availability:	This function is only available on devices with SPI hardware.
Requires:	Nothing
Examples:	`data_in = spi_read(out_data);`
Example Files:	ex_spi.c
Also See:	spi_write(), , , spi_data_is_in(), SPI Overview

spi_read_16()
spi_read2_16()
spi_read3_16()
spi_read4_16()

Syntax:	**value = spi_read_16([data]);** **value = spi_read2_16([data]);** **value = spi_read3_16([data]);** **value = spi_read4_16([data]);**
Parameters:	data – optional parameter and if included is a 16 bit int
Returns:	A 16 bit int

Function:	Return a value read by the SPI. If a value is passed to the spi_read_16() the data will be clocked out and the data received will be returned. If no data is ready, spi_read_16() will wait for the data is a SLAVE or return the last DATA clocked in from spi_write_16(). If this device is the MASTER then either do a spi_write_16(data) followed by a spi_read_16() or do a spi_read_16(data). These both do the same thing and will generate a clock. If there is no data to send just do a spi_read_16(0) to get the clock. If this device is a slave then either call spi_read_16() to wait for the clock and data or use_spi_data_is_in() to determine if data is ready.
Availability:	This function is only available on devices with SPI hardware.
Requires:	NThat the option SPI_MODE_16B be used in setup_spi() function, or that the option XFER16 be used in #use SPI(
Examples:	`data_in = spi_read_16(out_data);`
Example Files:	None
Also See:	spi_read(), spi_write(), spi_write_16(), spi_data_is_in(), SPI Overview

spi_speed

Syntax:	**spi_speed(**baud**);** **spi_speed(**stream**,**baud**);** **spi_speed**(stream**,**baud**,**clock**);**
Parameters:	**stream** – is the SPI stream to use as defined in the STREAM=name option in #USE SPI. **band**- the band rate to set the SPI module to **clock**- the current clock rate to calculate the band rate with. If not specified it uses the value specified in #use delay ().
Returns:	Nothing.
Function:	Sets the SPI module's baud rate to the specified value.
Availability:	This function is only available on devices with SPI hardware.
Requires:	#USE SPI

Examples:	spi_speed(250000);
	spi_speed(SPI1_MODE0, 250000);
	spi_speed(SPI1_MODE0, 125000, 8000000);

Example Files:	None
Also See:	#USE SPI, spi_xfer(), spi_xfer_in(), spi_prewrite(), spi_init()

spi_write( ) spi_write2( )

Syntax:	**spi_write([**wait**],***value***);** **spi_write2([**wait**],***value***);**
Parameters:	***value*** is an 8 bit int

	wait- an optional parameter specifying whether the function will wait for the SPI transfer to complete before exiting. Default is TRUE if not specified.
Returns:	Nothing
Function:	Sends a byte out the SPI interface. This will cause 8 clocks to be generated. This function will write the value out to the SPI. At the same time data is clocked out data is clocked in and stored in a receive buffer. spi_read() may be used to read the buffer.
Availability:	This function is only available on devices with SPI hardware.
Requires:	Nothing
Examples:	`spi_write( data_out );` `data_in = spi_read();`
Example Files:	ex_spi.c
Also See:	spi_read(), spi_data_is_in(), SPI Overview, spi_write_16(), spi_read_16()

spi_xfer( )

Syntax:	**spi_xfer(data)** **spi_xfer(stream, data)** **spi_xfer(stream, data, bits)** **result = spi_xfer(data)** **result = spi_xfer(stream, data)** **result = spi_xfer(stream, data, bits)**
Parameters:	***data*** is the variable or constant to transfer via SPI. The pin used to transfer *data* is defined in the DO=pin option in #use spi. ***stream*** is the SPI stream to use as defined in the STREAM=name option in #USE SPI. ***bits*** is how many bits of data will be transferred.
Returns:	The data read in from the SPI. The pin used to transfer result is defined in the DI=pin option in #USE SPI.
Function:	Transfers data to and reads data from an SPI device.
Availability:	All devices with SPI support.
Requires:	#USE SPI

Examples:	`int i = 34;`
	`spi_xfer(i);`
	`// transfers the number 34 via SPI`
	`int trans = 34, res;`
	`res = spi_xfer(trans);`
	`// transfers the number 34 via SPI`
	`// also reads the number coming in from SPI`

Example Files:	None
Also See:	#USE SPI

SPII_XFER_IN()

Syntax:	**value = spi_xfer_in();** **value = spi_xfer_in(bits);** **value = spi_xfer_in(stream,bits);**
Parameters:	stream – is the SPI stream to use as defined in the STREAM=name option in #USE SPI. bits – is how many bits of data to be received.
Returns:	The data read in from the SPI
Function:	Reads data from the SPI, without writing data into the transmit buffer first.
Availability:	This function is only available on devices with SPI hardware.
Requires:	#USE SPI, and the option SLAVE is used in #USE SPI to setup PIC as a SPI slave device.
Examples:	`data_in = spi_xfer_in();`
Example Files:	ex_spi_slave.c
Also See:	#USE SPI, spi_xfer(), spi_prewrite(), spi_init(), spi_speed()

sprintf( )

Syntax:	**sprintf(***string***,** *cstring***,** *values***...);** **bytes=sprintf(***string***,** *cstring***,** *values***...)**
Parameters:	***string*** is an array of characters. ***cstring*** is a constant string or an array of characters null terminated. ***Values*** are a list of variables separated by commas. Note that format specifies do not work in ram band strings.
Returns:	Bytes is the number of bytes written to string.
Function:	This function operates like printf() except that the output is placed into the specified string. The output string will be terminated with a null. No checking is done to ensure the string is large enough for the data. See printf() for details on formatting.
Availability:	All devices.
Requires:	Nothing

Examples:	`char mystring[20];`
	`long mylong;`
	
	`mylong=1234;`
	`sprintf(mystring,"<%lu>",mylong);`
	`// mystring now has:`
	`//  < 1 2 3 4 > \0`

Example Files:	None
Also See:	printf()

sqrt( )

Syntax:	**result = sqrt (*value*)**
Parameters:	***value*** is a float
Returns:	A float
Function:	Computes the non-negative square root of the float value x. If the argument is negative, the behavior is undefined. Note on error handling: If "errno.h" is included then the domain and range errors are stored in the errno variable. The user can check the errno to see if an error has occurred and print the error using the perror function. Domain error occurs in the following cases: sqrt: when the argument is negative
Availability:	All devices.
Requires:	#INCLUDE <math.h>
Examples:	`distance = sqrt( pow((x1-x2),2)+pow((y1-y2),2) );`
Example Files:	None
Also See:	None

srand( )

Syntax:	**srand(*n*)**
Parameters:	***n*** is the seed for a new sequence of pseudo-random numbers to be returned by subsequent calls to rand.
Returns:	No value.
Function:	The srand() function uses the argument as a seed for a new sequence of pseudo-random numbers to be returned by subsequent calls to rand. If srand() is then called with same seed value, the sequence of random numbers shall be repeated. If rand is called before any call to srand() have been made, the same sequence shall be generated as when srand() is first called with a seed value of 1.
Availability:	All devices.
Requires:	#INCLUDE <STDLIB.H>
Examples:	`srand(10);` `I=rand();`
Example Files:	None
Also See:	rand()

STANDARD STRING FUNCTIONS( ) memchr( ) memcmp( ) strcat( ) strchr( ) strcmp( ) strcoll( ) strcspn( ) strerror( ) stricmp( ) strlen( ) strlwr( ) strncat( ) strncmp( ) strncpy( ) strpbrk( ) strrchr( ) strspn( ) strstr( ) strxfrm( )

Syntax:

ptr=strcat (*s1*, *s2*)	**Concatenate s2 onto s1**
ptr=strchr (*s1*, *c*)	Find c in s1 and return &s1[i]
ptr=strrchr (*s1*, *c*)	Same but search in reverse
cresult=strcmp (*s1*, *s2*)	Compare s1 to s2
iresult=strncmp (*s1*, *s2*, *n*)	Compare s1 to s2 (n bytes)
iresult=stricmp (*s1*, *s2*)	Compare and ignore case
ptr=strncpy (*s1*, *s2*, *n*)	Copy up to n characters s2->s1
iresult=strcspn (*s1*, *s2*)	Count of initial chars in s1 not in s2
iresult=strspn (*s1*, *s2*)	Count of initial chars in s1 also in s2
iresult=strlen (*s1*)	Number of characters in s1
ptr=strlwr (*s1*)	Convert string to lower case
ptr=strpbrk (*s1*, *s2*)	Search s1 for first char also in s2
ptr=strstr (*s1*, *s2*)	Search for s2 in s1
ptr=strncat(*s1*,*s2*, *n*)	Concatenates up to n bytes of s2 onto s1
iresult=strcoll(*s1*,*s2*)	Compares s1 to s2, both interpreted as appropriate to the current locale.
res=strxfrm(*s1*,*s2*,*n*)	Transforms maximum of n characters of s2 and places them in s1, such that strcmp(s1,s2) will give the same result as strcoll(s1,s2)
iresult=memcmp(*m1*,*m2*,*n*)	Compare m1 to m2 (n bytes)
ptr=memchr(*m1*,*c*,*n*)	Find c in first n characters of m1 and return &m1[i]
ptr=strerror(errnum)	Maps the error number in errnum to an error message string. The parameters 'errnum' is an unsigned 8 bit int. Returns a pointer to the string.

Parameters:

s1 and ***s2*** are pointers to an array of characters (or the name of an array). Note that s1 and s2 MAY NOT BE A CONSTANT (like "hi").

n is a count of the maximum number of character to operate on.

c is a 8 bit character

m1 and ***m2*** are pointers to memory.

Returns:

ptr is a copy of the s1 pointer
iresult is an 8 bit int
result is -1 (less than), 0 (equal) or 1 (greater than)
res is an integer.

Function:

Functions are identified above.

Availability:

All devices.

Requires:

#include <string.h>

Examples:

```
char string1[10], string2[10];

strcpy(string1,"hi ");
strcpy(string2,"there");
strcat(string1,string2);

printf("Length is %u\r\n", strlen(string1));
```

```
// Will print 8
```

Example Files:	ex_str.c
Also See:	strcpy(), strtok()

strcpy( ) strcopy( )

Syntax:	**strcpy (***dest***,** *src***)** **strcopy (***dest***,** *src***)**
Parameters:	***dest*** is a pointer to a RAM array of characters. ***src*** may be either a pointer to a RAM array of characters or it may be a constant string.
Returns:	undefined
Function:	Copies a constant or RAM string to a RAM string. Strings are terminated with a 0.
Availability:	All devices.
Requires:	Nothing

Examples:	`char string[10], string2[10];`
	`.`
	`.`
	`.`
	`strcpy (string, "Hi There");`
	
	`strcpy(string2,string);`

Example Files:	ex_str.c
Also See:	strxxxx()

strtod( )

Syntax:	**result=strtod(***nptr***,&** *endptr***)**
Parameters:	***nptr*** and ***endptr*** are strings
Returns:	result is a float. returns the converted value in result, if any. If no conversion could be performed, zero is returned.
Function:	The strtod function converts the initial portion of the string pointed to by nptr to a float representation. The part of the string after conversion is stored in the object pointed to endptr, provided that endptr is not a null pointer. If nptr is empty or does not have the expected form, no conversion is performed and the value of nptr is stored in the object pointed to by endptr, provided endptr is not a null pointer.
Availability:	All devices.

Requires:	#INCLUDE <stdlib.h>

Examples:	`float result;`
	`char str[12]="123.45hello";`
	`char *ptr;`
	`result=strtod(str,&ptr);`
	`//result is 123.45 and ptr is "hello"`

Example Files:	None
Also See:	strtol(), strtoul()

strtok( )

Syntax:	**ptr = strtok(***s1***,** *s2***)**
Parameters:	***s1*** and ***s2*** are pointers to an array of characters (or the name of an array). Note that s1 and s2 MAY NOT BE A CONSTANT (like "hi"). s1 may be 0 to indicate a continue operation.
Returns:	ptr points to a character in s1 or is 0
Function:	Finds next token in s1 delimited by a character from separator string s2 (which can be different from call to call), and returns pointer to it. First call starts at beginning of s1 searching for the first character NOT contained in s2 and returns null if there is none are found. If none are found, it is the start of first token (return value). Function then searches from there for a character contained in s2. If none are found, current token extends to the end of s1, and subsequent searches for a token will return null. If one is found, it is overwritten by '\0', which terminates current token. Function saves pointer to following character from which next search will start. Each subsequent call, with 0 as first argument, starts searching from the saved pointer.
Availability:	All devices.
Requires:	#INCLUDE <string.h>

Examples:	`char string[30], term[3], *ptr;`
	
	`strcpy(string,"one,two,three;");`
	`strcpy(term,",;");`
	
	`ptr = strtok(string, term);`
	`while(ptr!=0) {`
	`  puts(ptr);`
	`  ptr = strtok(0, term);`
	`  }`
	`  // Prints:`
	`  one`
	`  two`
	`  three`

Example Files:	ex_str.c

Also See:	strxxxx(), strcpy()

strtol( )

Syntax:	**result=strtol(***nptr***,&** *endptr***,** *base***)**
Parameters:	***nptr*** and ***endptr*** are strings and ***base*** is an integer
Returns:	result is a signed long int. returns the converted value in result , if any. If no conversion could be performed, zero is returned.
Function:	The strtol function converts the initial portion of the string pointed to by nptr to a signed long int representation in some radix determined by the value of base. The part of the string after conversion is stored in the object pointed to endptr, provided that endptr is not a null pointer. If nptr is empty or does not have the expected form, no conversion is performed and the value of nptr is stored in the object pointed to by endptr, provided endptr is not a null pointer.
Availability:	All devices.
Requires:	#INCLUDE <stdlib.h>

Examples:	`signed long result;`
	`char str[9]="123hello";`
	`char *ptr;`
	`result=strtol(str,&ptr,10);`
	`//result is 123 and ptr is "hello"`

Example Files:	None
Also See:	strtod(), strtoul()

strtoul( )

Syntax:	**result=strtoul(***nptr***,***endptr***,** *base***)**
Parameters:	***nptr*** and ***endptr*** are strings pointers and ***base*** is an integer 2-36.
Returns:	result is an unsigned long int. returns the converted value in result , if any. If no conversion could be performed, zero is returned.
Function:	The strtoul function converts the initial portion of the string pointed to by nptr to a long int representation in some radix determined by the value of base. The part of the string after conversion is stored in the object pointed to endptr, provided that endptr is not a null pointer. If nptr is empty or does not have the expected form, no conversion is performed and the value of nptr is stored in the object pointed to by endptr, provided endptr is not a null pointer.

Availability:	All devices.
Requires:	STDLIB.H must be included

Examples:	`long result;`
	`char str[9]="123hello";`
	`char *ptr;`
	`result=strtoul(str,&ptr,10);`
	`//result is 123 and ptr is "hello"`

Example Files:	None
Also See:	strtol(), strtod()

swap( )

Syntax:	**swap (*lvalue*)**
Parameters:	***lvalue*** is a byte variable
Returns:	undefined - WARNING: this function does not return the result
Function:	Swaps the upper nibble with the lower nibble of the specified byte. This is the same as: byte = (byte << 4) | (byte >> 4);
Availability:	All devices.
Requires:	Nothing

Examples:	`x=0x45;`
	`swap(x);`
	`//x now is 0x54`

Example Files:	None
Also See:	rotate_right(), rotate_left()

tolower( ) toupper( )

Syntax:	**result = tolower (*cvalue*)** **result = toupper (*cvalue*)**
Parameters:	***cvalue*** is a character
Returns:	An 8 bit character
Function:	These functions change the case of letters in the alphabet.

	TOLOWER(X) will return 'a'..'z' for X in 'A'..'Z' and all other characters are unchanged. TOUPPER(X) will return 'A'..'Z' for X in 'a'..'z' and all other characters are unchanged.
Availability:	All devices.
Requires:	Nothing

Examples:	`switch( toupper(getc()) ) {`
	`  case 'R' : read_cmd();  break;`
	`  case 'W' : write_cmd(); break;`
	`  case 'Q' : done=TRUE;  break;`
	`}`

Example Files:	ex_str.c
Also See:	None

touchpad_getc( )

Syntax:	**input = TOUCHPAD_GETC( );**
Parameters:	None
Returns:	char (returns corresponding ASCII number is “input” declared as int)
Function:	Actively waits for firmware to signal that a pre-declared Capacitive Sensing Module (CSM) or charge time measurement unit (CTMU) pin is active, then stores the pre-declared character value of that pin in “input”. Note: Until a CSM or CTMU pin is read by firmware as active, this instruction will cause the microcontroller to stall.
Availability:	All PIC's with a CSM or CTMU Module
Requires:	#USE TOUCHPAD (options)

Examples:	`//When the pad connected to PIN_B0 is activated, store the letter 'A'`
	
	`#USE TOUCHPAD (PIN_B0='A')`
	`void main(void){`
	`  char c;`
	`  enable_interrupts(GLOBAL);`
	
	`  c = TOUCHPAD_GETC();`
	`  //will wait until one of declared pins is detected`
	`  //if PIN_B0 is pressed, c will get value 'A'`
	`}`

Example Files:	None
Also See:	#USE TOUCHPAD, touchpad_state( )

touchpad_hit( )

Syntax:	**value = TOUCHPAD_HIT( )**
Parameters:	None
Returns:	TRUE or FALSE
Function:	Returns TRUE if a Capacitive Sensing Module (CSM) or Charge Time Measurement Unit (CTMU) key has been pressed. If TRUE, then a call to touchpad_getc() will not cause the program to wait for a key press.
Availability:	All PIC's with a CSM or CTMU Module
Requires:	#USE TOUCHPAD (options)
Examples:	`// When the pad connected to PIN_B0 is activated, store the letter 'A'`

```
#USE TOUCHPAD (PIN_B0='A')
void main(void){
     char c;
     enable_interrupts(GLOBAL);

     while (TRUE) {
     if ( TOUCHPAD_HIT() )
           //wait until key on PIN_B0 is pressed
     c = TOUCHPAD_GETC();       //get key that was pressed
     }                          //c will get value 'A'
}
```

Example Files:	None
Also See:	#USE TOUCHPAD ( ), touchpad_state( ), touchpad_getc( )

touchpad_state( )

Syntax:	**TOUCHPAD_STATE** *(state)***;**
Parameters:	***state*** is a literal 0, 1, or 2.
Returns:	None
Function:	Sets the current state of the touchpad connected to the Capacitive Sensing Module (CSM). The state can be one of the following three values: 0 : Normal state 1 : Calibrates, then enters normal state 2 : Test mode, data from each key is collected in the int16 array TOUCHDATA Note: If the state is set to 1 while a key is being pressed, the touchpad will not calibrate properly.
Availability:	All PIC's with a CSM Module
Requires:	#USE TOUCHPAD (options)
Examples:	`#USE TOUCHPAD (THRESHOLD=5, PIN_D5='5', PIN_B0='C')` `void main(void){`

```
        char c;
        TOUCHPAD_STATE(1);     //calibrates, then enters normal state
        enable_interrupts(GLOBAL);
        while(1){
              c = TOUCHPAD_GETC();
                    //will wait until one of declared pins is detected
        }
                    //if PIN_B0 is pressed, c will get value 'C'
}                   //if PIN_D5 is pressed, c will get value '5'
```

Example Files:	None
Also See:	#USE TOUCHPAD, touchpad_getc( ), touchpad_hit( )

tx_buffer_available()

Syntax:	**value = tx_buffer_available([**stream**]);**
Parameters:	**stream** – optional parameter specifying the stream defined in #USE RS232.
Returns:	Number of bytes that can still be put into transmit buffer
Function:	Function to determine the number of bytes that can still be put into transmit buffer before it overflows. Transmit buffer is implemented has a circular buffer, so be sure to check to make sure there is room for at least one more then what is actually needed.
Availability:	All devices
Requires:	#USE RS232
Examples:	

```
#USE_RS232(UART1,BAUD=9600,TRANSMIT_BUFFER=50)
void main(void) {
   unsigned int8 Count = 0;

   while(TRUE){
      if(tx_buffer_available()>13)
         printf("/r/nCount=%3u",Count++);
   }
}
```

Example Files:	None
Also See:	_USE_RS232( ), rcv( ), TX_BUFFER_FULL( ), RCV_BUFFER_BYTES( ), GET( ), PUTC( ) ,PRINTF( ), SETUP_UART( ), PUTC_SEND( )

tx_buffer_bytes()

Syntax:	**value = tx_buffer_bytes([**stream**]);**
Parameters:	**stream** – optional parameter specifying the stream defined in #USE RS232.

Returns:	Number of bytes in transmit buffer that still need to be sent.
Function:	Function to determine the number of bytes in transmit buffer that still need to be sent.
Availability:	All devices
Requires:	#USE RS232

Examples:	#USE_RS232(UART1,BAUD=9600,TRANSMIT_BUFFER=50)
	void main(void) {
	  char string[] = “Hello”;
	  if(tx_buffer_bytes() <= 45)
	  printf(“%s”,string);
	}

Example Files:	None
Also See:	_USE_RS232( ), RCV_BUFFER_FULL( ), TX_BUFFER_FULL( ), RCV_BUFFER_BYTES( ), GET( ), PUTC( ) ,PRINTF( ), SETUP_UART( ), PUTC_SEND( )

.

tx_buffer_full( )

Syntax:	**value = tx_buffer_full([stream])**
Parameters:	**stream** – optional parameter specifying the stream defined in #USE RS232
Returns:	TRUE if transmit buffer is full, FALSE otherwise.
Function:	Function to determine if there is room in transmit buffer for another character.
Availability:	All devices
Requires:	#USE RS232

Examples:	#USE_RS232(UART1,BAUD=9600,TRANSMIT_BUFFER=50)
	void main(void) {
	  char c;
	
	  if(!tx_buffer_full())
	  putc(c);
	}

Example Files:	None
Also See:	_USE_RS232( ), RCV_BUFFER_FULL( ), TX_BUFFER_FULL( )., RCV_BUFFER_BYTES( ), GETC( ), PUTC( ), PRINTF( ), SETUP_UART( )., PUTC_SEND( )

va_arg( )

Syntax:	**va_arg(**argptr**,** type)
Parameters:	**argptr** is a special argument pointer of type va_list **type** – This is data type like int or char.
Returns:	The first call to va_arg after va_start return the value of the parameters after that specified by the last parameter. Successive invocations return the values of the remaining arguments in succession.
Function:	The function will return the next argument every time it is called.
Availability:	All devices.
Requires:	#INCLUDE <stdarg.h>

Examples:	`int foo(int num, ...)`
	`{`
	`int sum = 0;`
	`int i;`
	`va_list argptr;  // create special argument pointer`
	`va_start(argptr,num);  // initialize argptr`
	`for(i=0; i<num; i++)`
	`  sum = sum + va_arg(argptr, int);`
	`va_end(argptr);  // end variable processing`
	`return sum;`
	`}`

Example Files:	None
Also See:	nargs(), va_end(), va_start()

va_end( )

Syntax:	**va_end(**argptr**)**
Parameters:	**argptr** is a special argument pointer of type va_list.
Returns:	None
Function:	A call to the macro will end variable processing. This will facillitate a normal return from the function whose variable argument list was referred to by the expansion of va_start().
Availability:	All devices.
Requires:	#INCLUDE <stdarg.h>

Examples:	`int foo(int num, ...)`
	`{`
	`int sum = 0;`
	`int i;`
	`va_list argptr;  // create special argument pointer`
	`va_start(argptr,num);  // initialize argptr`
	`for(i=0; i<num; i++)`
	`  sum = sum + va_arg(argptr, int);`

```
va_end(argptr);  // end variable processing
return sum;
}
```

Example Files:	None
Also See:	nargs(), va_start(), va_arg()

va_start

Syntax:	**va_start(**argptr**,** variable**)**
Parameters:	**argptr** is a special argument pointer of type va_list **variable** – The second parameter to va_start() is the name of the last parameter before the variable-argument list.
Returns:	None
Function:	The function will initialize the argptr using a call to the macro va_start().
Availability:	All devices.
Requires:	#INCLUDE <stdarg.h>
Examples:	

```
int foo(int num, ...)
{
int sum = 0;
int i;
va_list argptr;  // create special argument pointer
va_start(argptr,num);  // initialize argptr
for(i=0; i<num; i++)
   sum = sum + va_arg(argptr, int);
va_end(argptr);  // end variable processing
return sum;
}
```

Example Files:	None
Also See:	nargs(), va_start(), va_arg()

write_bank( )

Syntax:	**write_bank (***bank***,** *offset***,** *value***)**
Parameters:	***bank*** is the physical RAM bank 1-3 (depending on the device) ***offset*** is the offset into user RAM for that bank (starts at 0) ***value*** is the 8 bit data to write
Returns:	undefined
Function:	Write a data byte to the user RAM area of the specified memory bank. This function may be used on some devices where full RAM access by auto variables is not efficient. For example on the PIC16C57 chip setting the pointer size to 5 bits will

	generate the most efficient ROM code however auto variables can not be above 1Fh. Instead of going to 8 bit pointers you can save ROM by using this function to write to the hard to reach banks. In this case the bank may be 1-3 and the offset may be 0-15.
Availability:	All devices but only useful on PCB parts with memory over 1Fh and PCM parts with memory over FFh.
Requires:	Nothing

Examples:	`i=0;  // Uses bank 1 as a RS232 buffer`
	`do {`
	`  c=getc();`
	`  write_bank(1,i++,c);`
	`} while (c!=0x13);`

Example Files:	ex_psp.c
Also See:	See the "Common Questions and Answers" section for more information.

write_configuration_memory( )

Syntax:	**write_configuration_memory (**[offset], dataptr,count**)**
Parameters:	***dataptr***: pointer to one or more bytes ***count***: a 8 bit integer **offset** is an optional parameter specifying the offset into configuration memory to start writing to, offset defaults to zero if not used.
Returns:	undefined
Function:	For PIC18 devices-Erases all fuses and writes count bytes from the dataptr to the configuration memory. For Enhanced16 devices - erases and write User ID memory.
Availability:	All PIC18 Flash and Enhanced16 devices
Requires:	Nothing
Examples:	`int data[6];` `write_configuration_memory(data,6)`
Example Files:	None
Also See:	write_program_memory(), Configuration Memory Overview

write_eeprom( )

Syntax:	**write_eeprom (***address***,** *value***)**
Parameters:	***address*** is a (8 bit or 16 bit depending on the part) int, the range is device dependent ***value*** is an 8 bit int
Returns:	undefined

Function:	Write a byte to the specified data EEPROM address. This function may take several milliseconds to execute. This works only on devices with EEPROM built into the core of the device. For devices with external EEPROM or with a separate EEPROM in the same package (like the 12CE671) see EX_EXTEE.c with CE51X.c, CE61X.c or CE67X.c. In order to allow interrupts to occur while using the write operation, use the #DEVICE option WRITE_EEPROM = NOINT. This will allow interrupts to occur while the write_eeprom() operations is polling the done bit to check if the write operations has completed. Can be used as long as no EEPROM operations are performed during an ISR.
Availability:	This function is only available on devices with supporting hardware on chip.
Requires:	Nothing

Examples:	`#define LAST_VOLUME  10  // Location in EEPROM`
	
	`volume++;`
	`write_eeprom(LAST_VOLUME,volume);`

Example Files:	ex_intee.c, ex_extee.c, ce51x.c, ce62x.c, ce67x.c
Also See:	read_eeprom(), write_program_eeprom(), read_program_eeprom(), data Eeprom Overview

write_external_memory( )

Syntax:	**write_external_memory(** *address*, *dataptr*, *count* **)**
Parameters:	**address** is 16 bits on PCM parts and 32 bits on PCH parts **dataptr** is a pointer to one or more bytes **count** is a 8 bit integer
Returns:	undefined
Function:	Writes count bytes to program memory from dataptr to address. Unlike write_program_eeprom() and read_program_eeprom() this function does not use any special EEPROM/FLASH write algorithm. The data is simply copied from register address space to program memory address space. This is useful for external RAM or to implement an algorithm for external flash.
Availability:	Only PCH devices.
Requires:	Nothing

Examples:	`for(i=0x1000;i<=0x1fff;i++) {`
	`  value=read_adc();`
	`  write_external_memory(i, value, 2);`
	`  delay_ms(1000);`
	`}`

Example Files:	ex_load.c, loader.c
Also See:	write_program_eeprom(), erase_program eeprom(), Program Eeprom Overview

write_extended_ram( )

Syntax:	**write_extended_ram (**page,address,data,count**);**
Parameters:	**page** – the page in extended RAM to write to **address** – the address on the selected page to start writing to **data** – pointer to the data to be written **count** – the number of bytes to write (0-32768)
Returns:	undefined
Function:	To write data to the extended RAM of the PIC.
Availability:	On devices with more then 30K of RAM.
Requires:	Nothing
Examples:	`unsigned int8 data[8] = {0x01,0x02,0x03,0x04,0x05,0x06,0x07,0x08};` `write_extended_ram(1,0x0000,data,8);`
Example Files:	None
Also See:	read_extended_ram(), Extended RAM Overview

write_program_eeprom( )

Syntax:	**write_program_eeprom (***address***,** *data***)**
Parameters:	***address*** is 16 bits on PCM parts and 32 bits on PCH parts, ***data*** is 16 bits. The least significant bit should always be 0 in PCH.
Returns:	undefined
Function:	Writes to the specified program EEPROM area. See our write_program_memory() for more information on this function.
Availability:	Only devices that allow writes to program memory.
Requires:	Nothing
Examples:	`write_program_eeprom(0,0x2800);  //disables program`
Example Files:	ex_load.c, loader.c
Also See:	read_program_eeprom(), read_eeprom(), write_eeprom(), write_program_memory(), erase_program_eeprom(), Program Eeprom Overview

write_program_memory( )

Syntax:	**write_program_memory(** *address***,** *dataptr***,** *count* **);**

Parameters:	***address*** is 16 bits on PCM parts and 32 bits on PCH parts . ***dataptr*** is a pointer to one or more bytes ***count*** is a 8 bit integer on PIC16 and 16-bit for PIC18
Returns:	undefined
Function:	Writes count bytes to program memory from dataptr to address. This function is most effective when count is a multiple of FLASH_WRITE_SIZE. Whenever this function is about to write to a location that is a multiple of FLASH_ERASE_SIZE then an erase is performed on the whole block.
Availability:	Only devices that allow writes to program memory.
Requires:	Nothing

Examples:	`for(i=0x1000;i<=0x1fff;i++) {`
	`  value=read_adc();`
	`  write_program_memory(i, value, 2);`
	`  delay_ms(1000);`
	`}`

Example Files:	loader.c
Also See:	write_program_eeprom , erase_program_eeprom , Program Eeprom Overview
Additional Notes:	Clarification about the functions to write to program memory: In order to get the desired results while using write_program_memory(), the block of memory being written to needs to first be read in order to save any other variables currently stored there, then erased to clear all values in the block before the new values can be written. This is because the write_program_memory() function does not save any values in memory and will only erase the block if the first location is written to. If this process is not followed, when new values are written to the block, they will appear as garbage values. For chips where getenv(“FLASH_ERASE_SIZE”) > getenv(“FLASH_WRITE_SIZE”) write_program_eeprom() - Writes 2 bytes, does not erase (use erase_program_eeprom()) write_program_memory() - Writes any number of bytes, will erase a block whenever the first (lowest) byte in a block is written to. If the first address is not the start of a block that block is not erased. erase_program_eeprom() - Will erase a block. The lowest address bits are not used. For chips where getenv(“FLASH_ERASE_SIZE”) = getenv(“FLASH_WRITE_SIZE”) write_program_eeprom() - Writes 2 bytes, no erase is needed. write_program_memory() - Writes any number of bytes, bytes outside the range of the write block are not changed. No erase is needed. erase_program_eeprom() - Not available

zdc_status( )

Syntax:	**value=zcd_status()**
Parameters:	*None*
Returns:	value - the status of the ZCD module. The following defines are made in header file and are as follows: • ZCD_IS_SINKING • ZCD_IS_SOURCING
Function:	To determine if the Zero-Cross Detection (ZCD) module is currently sinki If the ZCD module is setup to have the output polarity inverted, the value
Availability:	All devices with a ZCD module.
Examples:	`value=zcd_status():`
Example Files:	None
Also See:	setup_zcd()

STANDARD C INCLUDE FILES

errno.h

errno.h	
EDOM	Domain error value
ERANGE	Range error value
errno	error value

float.h

float.h	
FLT_RADIX:	Radix of the exponent representation
FLT_MANT_DIG:	Number of base digits in the floating point significant
FLT_DIG:	Number of decimal digits, q, such that any floating point number with q decimal digits can be rounded into a floating point number with p radix b digits and back again without change to the q decimal digits.
FLT_MIN_EXP:	Minimum negative integer such that FLT_RADIX raised to that power minus 1 is a normalized floating-point number.
FLT_MIN_10_EXP:	Minimum negative integer such that 10 raised to that power is in the range of normalized floating-point numbers.
FLT_MAX_EXP:	Maximum negative integer such that FLT_RADIX raised to that power minus 1 is a representable finite floating-point number.
FLT_MAX_10_EXP:	Maximum negative integer such that 10 raised to that power is in the range representable finite floating-point numbers.
FLT_MAX:	Maximum representable finite floating point number.
FLT_EPSILON:	The difference between 1 and the least value greater than 1 that is representable in the given floating point type.
FLT_MIN:	Minimum normalized positive floating point number
DBL_MANT_DIG:	Number of base digits in the floating point significant
DBL_DIG:	Number of decimal digits, q, such that any floating point number with q decimal digits can be rounded into a floating point number with p radix b digits and back again without change to the q decimal digits.
DBL_MIN_EXP:	Minimum negative integer such that FLT_RADIX raised to that power minus 1 is a normalized floating point number.
DBL_MIN_10_EXP:	Minimum negative integer such that 10 raised to that power is in the range of normalized floating point numbers.
DBL_MAX_EXP:	Maximum negative integer such that FLT_RADIX raised to that power minus 1 is a representable finite floating point number.
DBL_MAX_10_EXP:	Maximum negative integer such that 10 raised to that power is in the range of representable finite floating point numbers.
DBL_MAX:	Maximum representable finite floating point number.
DBL_EPSILON:	The difference between 1 and the least value greater than 1 that is representable in the given floating point type.
DBL_MIN:	Minimum normalized positive floating point number.
LDBL_MANT_DIG:	Number of base digits in the floating point significant
LDBL_DIG:	Number of decimal digits, q, such that any floating point number with q decimal digits can be rounded into a floating point number with p radix b digits and back again without change to the q decimal digits.

LDBL_MIN_EXP:	Minimum negative integer such that FLT_RADIX raised to that power minus 1 is a normalized floating-point number.
LDBL_MIN_10_EXP:	Minimum negative integer such that 10 raised to that power is in the range of normalized floating-point numbers.
LDBL_MAX_EXP:	Maximum negative integer such that FLT_RADIX raised to that power minus 1 is a representable finite floating-point number.
LDBL_MAX_10_EXP:	Maximum negative integer such that 10 raised to that power is in the range of representable finite floating-point numbers.
LDBL_MAX:	Maximum representable finite floating point number.
LDBL_EPSILON:	The difference between 1 and the least value greater than 1 that is representable in the given floating point type.
LDBL_MIN:	Minimum normalized positive floating point number.

limits.h

limits.h	
CHAR_BIT:	Number of bits for the smallest object that is not a bit_field.
SCHAR_MIN:	Minimum value for an object of type signed char
SCHAR_MAX:	Maximum value for an object of type signed char
UCHAR_MAX:	Maximum value for an object of type unsigned char
CHAR_MIN:	Minimum value for an object of type char(unsigned)
CHAR_MAX:	Maximum value for an object of type char(unsigned)
MB_LEN_MAX:	Maximum number of bytes in a multibyte character.
SHRT_MIN:	Minimum value for an object of type short int
SHRT_MAX:	Maximum value for an object of type short int
USHRT_MAX:	Maximum value for an object of type unsigned short int
INT_MIN:	Minimum value for an object of type signed int
INT_MAX:	Maximum value for an object of type signed int
UINT_MAX:	Maximum value for an object of type unsigned int
LONG_MIN:	Minimum value for an object of type signed long int
LONG_MAX:	Maximum value for an object of type signed long int
ULONG_MAX:	Maximum value for an object of type unsigned long int

locale.h

locale.h	
locale.h	(Localization not supported)
lconv	localization structure
SETLOCALE()	returns null
LOCALCONV()	returns clocale

setjmp.h

setjmp.h	
jmp_buf:	An array used by the following functions
setjmp:	Marks a return point for the next longjmp

longjmp:	Jumps to the last marked point

stddef.h

stddef.h	
ptrdiff_t:	The basic type of a pointer
size_t:	The type of the sizeof operator (int)
wchar_t	The type of the largest character set supported (char) (8 bits)
NULL	A null pointer (0)

stdio.h

stdio.h	
stderr	The standard error s stream (USE RS232 specified as stream or the first USE RS232)
stdout	The standard output stream (USE RS232 specified as stream last USE RS232)
stdin	The standard input s stream (USE RS232 specified as stream last USE RS232)

stdlib.h

stdlib.h	
div_t	structure type that contains two signed integers (quot and rem).
ldiv_t	structure type that contains two signed longs (quot and rem
EXIT_FAILURE	returns 1
EXIT_SUCCESS	returns 0
RAND_MAX-	
MBCUR_MAX-	1
SYSTEM()	Returns 0(not supported)
Multibyte character and string functions:	Multibyte characters not supported
MBLEN()	Returns the length of the string.
MBTOWC()	Returns 1.
WCTOMB()	Returns 1.
MBSTOWCS()	Returns length of string.
WBSTOMBS()	Returns length of string.

Stdlib.h functions included just for compliance with ANSI C.

ERROR MESSAGES

Compiler Error Messages

 # ENDIF with no corresponding #IF
Compiler found a #ENDIF directive without a corresponding #IF.
#ERROR
A #DEVICE required before this line
The compiler requires a #device before it encounters any statement or compiler directive that may cause it to generate code. In general #defines may appear before a #device but not much more.

ADDRESSMOD function definition is incorrect

ADDRESSMOD range is invalid
A numeric expression must appear here
Some C expression (like 123, A or B+C) must appear at this spot in the code. Some expression that will evaluate to a value.
Arrays of bits are not permitted
Arrays may not be of SHORT INT. Arrays of Records are permitted but the record size is always rounded up to the next byte boundary.

Assignment invalid: value is READ ONLY
Attempt to create a pointer to a constant
Constant tables are implemented as functions. Pointers cannot be created to functions. For example CHAR CONST MSG[9]={"HI THERE"}; is permitted, however you cannot use &MSG. You can only reference MSG with subscripts such as MSG[i] and in some function calls such as Printf and STRCPY.
Attributes used may only be applied to a function (INLINE or SEPARATE)
An attempt was made to apply #INLINE or #SEPARATE to something other than a function.

Bad ASM syntax
Bad expression syntax
This is a generic error message. It covers all incorrect syntax.
Baud rate out of range
The compiler could not create code for the specified baud rate. If the internal UART is being used the combination of the clock and the UART capabilities could not get a baud rate within 3% of the requested value. If the built in UART is not being used then the clock will not permit the indicated baud rate. For fast baud rates, a faster clock will be required.
BIT variable not permitted here
Addresses cannot be created to bits. For example &X is not permitted if X is a SHORT INT.

Branch out of range
Cannot change device type this far into the code
The #DEVICE is not permitted after code is generated that is device specific. Move the #DEVICE to an area before code is generated.
Character constant constructed incorrectly
Generally this is due to too many characters within the single quotes. For example 'ab' is an error as is '\nr'. The backslash is permitted provided the result is a single character such as '\010' or '\n'.
Constant out of the valid range
This will usually occur in inline assembly where a constant must be within a particular range and it is not. For example BTFSC 3,9 would cause this error since the second operand must be from 0-8.

Data item too big
Define expansion is too large
A fully expanded DEFINE must be less than 255 characters. Check to be sure the DEFINE is not recursively defined.
Define syntax error
This is usually caused by a missing or misplaced (or) within a define.
Demo period has expired

Please contact CCS to purchase a licensed copy.

www.ccsinfo.com/pricing
Different levels of indirection
This is caused by a INLINE function with a reference parameter being called with a parameter that is not a variable. Usually calling with a constant causes this.
Divide by zero
An attempt was made to divide by zero at compile time using constants.
Duplicate case value
Two cases in a switch statement have the same value.
Duplicate DEFAULT statements
The DEFAULT statement within a SWITCH may only appear once in each SWITCH. This error indicates a second DEFAULT was encountered.
Duplicate function
A function has already been defined with this name. Remember that the compiler is not case sensitive unless a #CASE is used.
Duplicate Interrupt Procedure
Only one function may be attached to each interrupt level. For example the #INT_RB may only appear once in each program.
Element is not a member
A field of a record identified by the compiler is not actually in the record. Check the identifier spelling.
ELSE with no corresponding IF
Compiler found an ELSE statement without a corresponding IF. Make sure the ELSE statement always match with the previous IF statement.
End of file while within define definition
The end of the source file was encountered while still expanding a define. Check for a missing).
End of source file reached without closing comment */ symbol
The end of the source file has been reached and a comment (started with /*) is still in effect. The */ is missing.
type are INT and CHAR.

Expect ;
Expect }
Expect CASE
Expect comma
Expect WHILE
Expecting *
Expecting :
Expecting <
Expecting =
Expecting >
Expecting a (
Expecting a , or)
Expecting a , or }
Expecting a .
Expecting a ; or ,
Expecting a ; or {
Expecting a close paren
Expecting a declaration
Expecting a structure/union
Expecting a variable
Expecting an =
Expecting a]
Expecting a {
Expecting an array
Expecting an identifier
Expecting function name
Expecting an opcode mnemonic
This must be a Microchip mnemonic such as MOVLW or BTFSC.
Expecting LVALUE such as a variable name or * expression
This error will occur when a constant is used where a variable should be. For example 4=5; will give this error.
Expecting a basic type
Examples of a basic type are INT and CHAR.

Expression must be a constant or simple variable
The indicated expression must evaluate to a constant at compile time. For example 5*3+1 is permitted but 5*x+1 where X is a INT is not permitted. If X were a DEFINE that had a constant value then it is permitted.
Expression must evaluate to a constant
The indicated expression must evaluate to a constant at compile time. For example 5*3+1 is permitted but 5*x+1 where X is a INT is not permitted. If X were a DEFINE that had a constant value then it is permitted.
Expression too complex
This expression has generated too much code for the compiler to handle for a single expression. This is very rare but if it happens, break the expression up into smaller parts.

Too many assembly lines are being generated for a single C statement. Contact CCS to increase the internal limits.

EXTERNal symbol not found

EXTERNal symbol type mis-match
Extra characters on preprocessor command line
Characters are appearing after a preprocessor directive that do not apply to that directive. Preprocessor commands own the entire line unlike the normal C syntax. For example the following is an error:
```
#PRAGMA DEVICE <PIC16C74> main() { int x; x=1;}
```
File cannot be opened
Check the filename and the current path. The file could not be opened.
File cannot be opened for write
The operating system would not allow the compiler to create one of the output files. Make sure the file is not marked READ ONLY and that the compiler process has write privileges to the directory and file.
Filename must start with " or <
The correct syntax of a #include is one of the following two formats:
```
#include "filename.ext"
#include <filename.ext>
```
This error indicates neither a " or < was found after #include.
Filename must terminate with " or; msg:' '
The filename specified in a #include must terminate with a " if it starts with a ". It must terminate with a > if it starts with a <.
Floating-point numbers not supported for this operation
A floating-point number is not permitted in the operation near the error. For example, ++F where F is a float is not allowed.
Function definition different from previous definition
This is a mis-match between a function prototype and a function definition. Be sure that if a #INLINE or #SEPARATE are used that they appear for both the prototype and definition. These directives are treated much like a type specifier.

Function used but not defined
The indicated function had a prototype but was never defined in the program.
Identifier is already used in this scope
An attempt was made to define a new identifier that has already been defined.
Illegal C character in input file
A bad character is in the source file. Try deleting the line and re-typing it.

Import error
Improper use of a function identifier
Function identifiers may only be used to call a function. An attempt was made to otherwise reference a function. A function identifier should have a (after it.
Incorrectly constructed label
This may be an improperly terminated expression followed by a label. For example:
```
x=5+
MPLAB:
```
Initialization of unions is not permitted
Structures can be initialized with an initial value but UNIONS cannot be.
Internal compiler limit reached
The program is using too much of something. An internal compiler limit was reached. Contact CCS and the limit may be able to be expanded.
Internal Error - Contact CCS

This error indicates the compiler detected an internal inconsistency. This is not an error with the source code; although, something in the source code has triggered the internal error. This problem can usually be quickly corrected by sending the source files to CCS so the problem can be re-created and corrected.

In the meantime if the error was on a particular line, look for another way to perform the same operation. The error was probably caused by the syntax of the identified statement. If the error was the last line of the code, the problem was in linking. Look at the call tree for something out of the ordinary.
Interrupt handler uses too much stack
Too many stack locations are being used by an interrupt handler.
Invalid conversion from LONG INT to INT
In this case, a LONG INT cannot be converted to an INT. You can type cast the LONG INT to perform a truncation. For example:
```
I = INT(LI);
```
Invalid interrupt directive
Invalid parameters to built in function
Built-in shift and rotate functions (such as SHIFT_LEFT) require an expression that evaluates to a constant to specify the number of bytes.
Invalid Pre-Processor directive
The compiler does not know the preprocessor directive. This is the identifier in one of the following two places:
```
#xxxxx
#PRAGMA xxxxx
```
Invalid ORG range
The end address must be greater than or equal to the start address. The range may not overlap another range. The range may not include locations 0-3. If only one address is specified it must match the start address of a previous #org.

Invalid overload function
Invalid type conversion
Label not permitted here
Library in USE not found
The identifier after the USE is not one of the pre-defined libraries for the compiler. Check the spelling.
Linker Error: "%s" already defined in "%s"
Linker Error: ("%s'
Linker Error: Canont allocate memory for the section "%s" in the module "%s", because it overlaps with other sections.
Linker Error: Cannot find unique match for symbol "%s"
Linker Error: Cannot open file "%s"
Linker Error: COFF file "%s" is corrupt; recompile module.
Linker Error: Not enough memory in the target to reallocate the section "%s" in the module "%s".
Linker Error: Section "%s" is found in the modules "%s" and "%s" with different section types.
Linker Error: Unknown error, contact CCS support.
Linker Error: Unresolved external symbol "%s" inside the module "%s".
Linker option no compatible with prior options.
Linker Warning: Section "%s" in module "%s" is declared as shared but there is no shared memory in the target chip. The shared flag is ignored.
Linker option not compatible with prior options
Conflicting linker options are specified. For example using both the EXCEPT= and ONLY= options in the same directive is not legal.
LVALUE required
This error will occur when a constant is used where a variable should be. For example 4=5; will give this error.
Macro identifier requires parameters
A #DEFINE identifier is being used but no parameters were specified, as required. For example:
```
#define min(x,y) ((x<y)?x:y)
```
When called MIN must have a (--,--) after it such as:
```
r=min(value, 6);
```
Macro is defined recursively
A C macro has been defined in such a way as to cause a recursive call to itself.
Missing #ENDIF
A #IF was found without a corresponding #ENDIF.
Missing or invalid .CRG file
The user registration file(s) are not part of the download software. In order for the software to run the files must be in the same directory as the .EXE files. These files are on the original diskette, CD ROM or e-mail in a non-compressed

format. You need only copy them to the .EXE directory. There is one .REG file for each compiler (PCB.REG, PCM.REG and PCH.REG).

More info:

Must have a #USE DELAY before this #USE
Must have a #USE DELAY before a #USE RS232
The RS232 library uses the DELAY library. You must have a #USE DELAY before you can do a #USE RS232.
No errors
The program has successfully compiled and all requested output files have been created.
No MAIN() function found
All programs are required to have one function with the name main().

No overload function matches

No valid assignment made to function pointer
Not enough RAM for all variables
The program requires more RAM than is available. The symbol map shows variables allocated. The call tree shows the RAM used by each function. Additional RAM usage can be obtained by breaking larger functions into smaller ones and splitting the RAM between them.

For example, a function A may perform a series of operations and have 20 local variables declared. Upon analysis, it may be determined that there are two main parts to the calculations and many variables are not shared between the parts. A function B may be defined with 7 local variables and a function C may be defined with 7 local variables. Function A now calls B and C and combines the results and now may only need 6 variables. The savings are accomplished because B and C are not executing at the same time and the same real memory locations will be used for their 6 variables (just not at the same time). The compiler will allocate only 13 locations for the group of functions A, B, C where 20 were required before to perform the same operation.
Number of bits is out of range
For a count of bits, such as in a structure definition, this must be 1-8. For a bit number specification, such as in the #BIT, the number must be 0-7.

Only integers are supported for this operation

Option invalid
Out of ROM, A segment or the program is too large
A function and all of the INLINE functions it calls must fit into one segment (a hardware code page). For example, on the PIC16 chip a code page is 512 instructions. If a program has only one function and that function is 600 instructions long, you will get this error even though the chip has plenty of ROM left. The function needs to be split into at least two smaller functions. Even after this is done, this error may occur since the new function may be only called once and the linker might automatically INLINE it. This is easily determined by reviewing the call tree. If this error is caused by too many functions being automatically INLINED by the linker, simply add a #SEPARATE before a function to force the function to be SEPARATE. Separate functions can be allocated on any page that has room. The best way to understand the cause of this error is to review the call tree.

Parameters must be located in RAM
Parameters not permitted
An identifier that is not a function or preprocessor macro can not have a ' (' after it.
Pointers to bits are not permitted
Addresses cannot be created to bits. For example, &X is not permitted if X is a SHORT INT.
Previous identifier must be a pointer
A -> may only be used after a pointer to a structure. It cannot be used on a structure itself or other kind of variable.
Printf format type is invalid
An unknown character is after the % in a printf. Check the printf reference for valid formats.
Printf format (%) invalid
A bad format combination was used. For example, %lc.
Printf variable count (%) does not match actual count
The number of % format indicators in the printf does not match the actual number of variables that follow. Remember in order to print a single %, you must use %%.
Recursion not permitted
The linker will not allow recursive function calls. A function may not call itself and it may not call any other function that will eventually re-call it.

Recursively defined structures not permitted
A structure may not contain an instance of itself.
Reference arrays are not permitted
A reference parameter may not refer to an array.
Return not allowed in void function
A return statement may not have a value if the function is void.

RTOS call only allowed inside task functions

Selected part does not have ICD debug capability
STDOUT not defined (may be missing #RS 232)
An attempt was made to use a I/O function such as printf when no default I/O stream has been established. Add a #USE RS232 to define a I/O stream.
Stream must be a constant in the valid range
I/O functions like fputc, fgetc require a stream identifier that was defined in a #USE RS232. This identifier must appear exactly as it does when it was defined. Be sure it has not been redefined with a #define.
String too long
Structure field name required
A structure is being used in a place where a field of the structure must appear. Change to the form s.f where s is the structure name and f is a field name.

Structures and UNIONS cannot be parameters (use * or &)
A structure may not be passed by value. Pass a pointer to the structure using &.
Subscript out of range
A subscript to a RAM array must be at least 1 and not more than 128 elements. Note that large arrays might not fit in a bank. ROM arrays may not occupy more than 256 locations.
This linker function is not available in this compiler version.
Some linker functions are only available if the PCW or PCWH product is installed.
This type cannot be qualified with this qualifier
Check the qualifiers. Be sure to look on previous lines. An example of this error is:
```
VOID X;
```
Too many array subscripts
Arrays are limited to 5 dimensions.
Too many constant structures to fit into available space
Available space depends on the chip. Some chips only allow constant structures in certain places. Look at the last calling tree to evaluate space usage. Constant structures will appear as functions with a @CONST at the beginning of the name.
Too many elements in an ENUM
A max of 256 elements are allowed in an ENUM.

Too many fast interrupt handlers have been defined
Too many fast interrupt handlers have been identified
Too many nested #INCLUDEs
No more than 10 include files may be open at a time.
Too many parameters
More parameters have been given to a function than the function was defined with.
Too many subscripts
More subscripts have been given to an array than the array was defined with.
Type is not defined
The specified type is used but not defined in the program. Check the spelling.
Type specification not valid for a function
This function has a type specifier that is not meaningful to a function.

Undefined identifier
Undefined label that was used in a GOTO
There was a GOTO LABEL but LABEL was never encountered within the required scope. A GOTO cannot jump outside a function.
Unknown device type
A #DEVICE contained an unknown device. The center letters of a device are always C regardless of the actual part in use. For example, use PIC16C74 not PIC16RC74. Be sure the correct compiler is being used for the indicated device. See #DEVICE for more information.
Unknown keyword in #FUSES

Check the keyword spelling against the description under #FUSES.
Unknown linker keyword
The keyword used in a linker directive is not understood.
Unknown type
The specified type is used but not defined in the program. Check the spelling.

User aborted compilation
USE parameter invalid
One of the parameters to a USE library is not valid for the current environment.
USE parameter value is out of range
One of the values for a parameter to the USE library is not valid for the current environment.

Variable never used

Variable of this data type is never greater than this constant

COMPILER WARNING MESSAGES

Compiler Warning Messages

#error/warning
Assignment inside relational expression
Although legal it is a common error to do something like if(a=b) when it was intended to do if(a==b).

Assignment to enum is not of the correct type.
This warning indicates there may be such a typo in this line:
Assignment to enum is not of the correct type
If a variable is declared as a ENUM it is best to assign to the variables only elements of the enum. For example:

```
enum colors {RED,GREEN,BLUE} color;
...
color = GREEN;  // OK
color = 1;      // Warning 209
color = (colors)1;  //OK
```

Code has no effect
The compiler can not discern any effect this source code could have on the generated code. Some examples:

```
1;
a==b;
1,2,3;
```

Condition always FALSE
This error when it has been determined at compile time that a relational expression will never be true. For example:

```
int x;
if( x>>9 )
```

Condition always TRUE
This error when it has been determined at compile time that a relational expression will never be false. For example:

```
#define PIN_A1 41
...
if( PIN_A1 )    // Intended was: if( input(PIN_A1) )
```

Function not void and does not return a value
Functions that are declared as returning a value should have a return statement with a value to be returned. Be aware that in C only functions declared VOID are not intended to return a value. If nothing is specified as a function return value "int" is assumed.
Duplicate #define
The identifier in the #define has already been used in a previous #define. To redefine an identifier use #UNDEF first. To prevent defines that may be included from multiple source do something like:

```
#ifndef  ID
#define ID text
#endif
```

Feature not supported

Function never called

Function not void and does not return a value.

Info:

Interrupt level changed

Interrupts disabled during call to prevent re-entrancy.
Linker Warning: "%s" already defined in object "%s"; second definition ignored.
Linker Warning: Address and size of section "%s" in module "%s" exceeds maximum range for this processor. The section will be ignored.

Linker Warning: The module "%s" doesn't have a valid chip id. The module will be considered for the target chip "%s".
Linker Warning: The target chip "%s" of the imported module "%s" doesn't match the target chip "%s" of the source.
Linker Warning: Unsupported relocation type in module "%s".

Memory not available at requested location.
Operator precedence rules may not be as intended, use() to clarify
Some combinations of operators are confusing to some programmers. This warning is issued for expressions where adding() would help to clarify the meaning. For example:

```
if( x << n + 1 )
```

would be more universally understood when expressed:

```
if( x << (n + 1) )
```

Option may be wrong
Structure passed by value
Structures are usually passed by reference to a function. This warning is generated if the structure is being passed by value. This warning is not generated if the structure is less than 5 bytes. For example:

```
void myfunct( mystruct s1 )  // Pass by value - Warning
myfunct( s2 );
void myfunct( mystruct * s1 )  // Pass by reference - OK
myfunct( &s2 );
void myfunct( mystruct & s1 )  // Pass by reference - OK
myfunct( s2 );
```

Undefined identifier
The specified identifier is being used but has never been defined. Check the spelling.
Unprotected call in a #INT_GLOBAL
The interrupt function defined as #INT_GLOBAL is intended to be assembly language or very simple C code. This error indicates the linker detected code that violated the standard memory allocation scheme. This may be caused when a C function is called from a #INT_GLOBAL interrupt handler.
Unreachable code
Code included in the program is never executed. For example:

```
if(n==5)
  goto do5;
goto exit;
if(n==20)   // No way to get to this line
  return;
```

Unsigned variable is never less than zero
Unsigned variables are never less than 0. This warning indicates an attempt to check to see if an unsigned variable is negative. For example the following will not work as intended:

```
int i;
for(i=10; i>=0; i--)
```

Variable assignment never used.
Variable of this data type is never greater than this constant
A variable is being compared to a constant. The maximum value of the variable could never be larger than the constant. For example the following could never be true:

```
int x;  // 8 bits, 0-255
if ( x>300)
```

Variable never used
A variable has been declared and never referenced in the code.

Variable used before assignment is made.

COMMON QUESTIONS & ANSWERS

How are type conversions handled?

The compiler provides automatic type conversions when an assignment is performed. Some information may be lost if the destination can not properly represent the source. For example: int8var = int16var; Causes the top byte of int16var to be lost.

Assigning a smaller signed expression to a larger signed variable will result in the sign being maintained. For example, a signed 8 bit int that is -1 when assigned to a 16 bit signed variable is still -1.

Signed numbers that are negative when assigned to a unsigned number will cause the 2's complement value to be assigned. For example, assigning -1 to a int8 will result in the int8 being 255. In this case the sign bit is not extended (conversion to unsigned is done before conversion to more bits). This means the -1 assigned to a 16 bit unsigned is still 255.

Likewise assigning a large unsigned number to a signed variable of the same size or smaller will result in the value being distorted. For example, assigning 255 to a signed int8 will result in -1.

The above assignment rules also apply to parameters passed to functions.

When a binary operator has operands of differing types then the lower order operand is converted (using the above rules) to the higher. The order is as follows:

- Float
- Signed 32 bit
- Unsigned 32 bit
- Signed 16 bit
- Unsigned 16 bit
- Signed 8 bit
- Unsigned 8 bit
- 1 bit

The result is then the same as the operands. Each operator in an expression is evaluated independently. For example:

i32 = i16 - (i8 + i8)

The + operator is 8 bit, the result is converted to 16 bit after the addition and the - is 16 bit, that result is converted to 32 bit and the assignment is done. Note that if i8 is 200 and i16 is 400 then the result in i32 is 256. (200 plus 200 is 144 with a 8 bit +)

Explicit conversion may be done at any point with (type) inserted before the expression to be converted. For example in the above the perhaps desired effect may be achieved by doing:

i32 = i16 - ((long)i8 + i8)

In this case the first i8 is converted to 16 bit, then the add is a 16 bit add and the second i8 is forced to 16 bit.

A common C programming error is to do something like:

i16 = i8 * 100;

When the intent was:
i16 = (long) i8 * 100;

Remember that with unsigned ints (the default for this compiler) the values are never negative. For example 2-4 is 254 (in 8 bit). This means the following is an endless loop since i is never less than 0:

int i;
for(i=100; i>=0; i--)

How can a constant data table be placed in ROM?

The compiler has support for placing any data structure into the device ROM as a constant read-only element. Since the ROM and RAM data paths are separate in the PIC® , there are restrictions on how the data is accessed. For example, to place a 10 element BYTE array in ROM use:

```
BYTE CONST TABLE [10]= {9,8,7,6,5,4,3,2,1,0};
```

and to access the table use:

```
x = TABLE [i];
```

OR

```
x = TABLE [5];
```

BUT NOT

```
ptr = &TABLE [i];
```

In this case, a pointer to the table cannot be constructed.

Similar constructs using CONST may be used with any data type including structures, longs and floats.

Note that in the implementation of the above table, a function call is made when a table is accessed with a subscript that cannot be evaluated at compile time.

How can I use two or more RS-232 ports on one PIC®?

The #USE RS232 (and I2C for that matter) is in effect for GETC, PUTC, PRINTF and KBHIT functions encountered until another #USE RS232 is found.

The #USE RS232 is not an executable line. It works much like a #DEFINE.

The following is an example program to read from one RS-232 port (A) and echo the data to both the first RS-232 port (A) and a second RS-232 port (B).

```
#USE  RS232(BAUD=9600, XMIT=PIN_B0, RCV=PIN_B1)
void  put_to_a( char c ) {
   put(c);
}
char  get_from_a( ) {
    return(getc()); }
#USE RS232(BAUD=9600, XMIT=PIN_B2,RCV=PIN_B3)
void put_to_b( char b ) {
   putc(c);
}
main() {
   char c;
   put_to_a("Online\n\r");
   put_to_b("Online\n\r");
   while(TRUE) {
     c=get_from_a();
```

```
     put_to_b(c);
     put_to_a(c);
   }
}
```

The following will do the same thing but is more readable and is the recommended method:

```
#USE RS232(BAUD=9600, XMIT=PIN_B0, RCV=PIN_B1, STREAM=COM_A)
#USE RS232(BAUD=9600, XMIT=PIN_B2, RCV=PIN_B3, STREAM=COM_B)

   main() {
      char c;
      fprintf(COM_A,"Online\n\r");
      fprintf(COM_B,"Online\n\r");
      while(TRUE) {
        c = fgetc(COM_A);
        fputc(c, COM_A);
        fputc(c, COM_B);
      }
    }
```

How can the RB interrupt be used to detect a button press?

The RB interrupt will happen when there is any change (input or output) on pins B4-B7. There is only one interrupt and the PIC® does not tell you which pin changed. The programmer must determine the change based on the previously known value of the port. Furthermore, a single button press may cause several interrupts due to bounce in the switch. A debounce algorithm will need to be used. The following is a simple example:

```
#int_rb
rb_isr() {
    byte changes;
    changes = last_b ^ port_b;
    last_b = port_b;
    if (bit_test(changes,4 )&& !bit_test(last_b,4)){
         //b4 went low
    }
    if (bit_test(changes,5)&& !bit_test (last_b,5)){
        //b5 went low
    }
    .
    .
    .
    delay_ms (100);  //debounce
}
```

The delay=ms (100) is a quick and dirty debounce. In general, you will not want to sit in an ISR for 100 MS to allow the switch to debounce. A more elegant solution is to set a timer on the first interrupt and wait until the timer overflows. Do not process further changes on the pin.

How do I directly read/write to internal registers?

A hardware register may be mapped to a C variable to allow direct read and write capability to the register. The following is an example using the TIMER0 register:

```
#BYTE timer 0 = 0x 01
timer0= 128; //set timer0 to 128
while (timer 0 ! = 200); // wait for timer0 to reach 200
```

Bits in registers may also be mapped as follows:

```
#BIT T 0 IF = 0x 0B.2
.
.
.
while (!T 0 IF); //wait for timer0 interrupt
```

Registers may be indirectly addressed as shown in the following example:

```
printf ("enter address:");
a = gethex ();
printf  ("\r\n value is %x\r\n", *a);
```

The compiler has a large set of built-in functions that will allow one to perform the most common tasks with C function calls. When possible, it is best to use the built-in functions rather than directly write to registers. Register locations change between chips and some register operations require a specific algorithm to be performed when a register value is changed. The compiler also takes into account known chip errata in the implementation of the built-in functions. For example, it is better to do set_tris_ A (0); rather than *0x 85 =0;

How do I do a printf to a string?

The following is an example of how to direct the output of a printf to a string. We used the \f to indicate the start of the string.

This example shows how to put a floating point number in a string.

```
main() {
   char string[20];
   float f;
   f=12.345;
   sprintf(string,"\f%6.3f",f);
}
```

How do I get getc() to timeout after a specified time?

GETC will always wait for a character to become available unless a timeout time is specified in the #use rs232().
The following is an example of how to setup the PIC to timeout when waiting for an RS232 character.

```
#include <18F4520.h>
#fuses HS,NOWDT
#use delay(clock=20MHz)
#use rs232(UART1,baud=9600,timeout=500) //timeout = 500 milliseconds, 1/2 second
void main()
{
   char c;

   while(TRUE)
   {
      c=getc();   //if getc() timeouts 0 is returned to c
                       //otherwise receive character is returned to c

      if(c) //if not zero echo character back
         putc(c);
      //user to do code
      output_toggle(PIN_A5);
   }
}
```

How do I put a NOP at location 0 for the ICD?

The CCS compilers are fully compatible with Microchips ICD debugger using MPLAB. In order to prepare a program for ICD debugging (NOP at location 0 and so on) you need to add a #DEVICE ICD=TRUE after your normal #DEVICE.

For example:

```
#INCLUDE <16F877.h>
#DEVICE  ICD=TRUE
```

How do I wait only a specified time for a button press?

The following is an example of how to wait only a specific time for a button press.

```
#define PUSH_BUTTON PIN_A4
int1 timeout_error;
int1 timed_get_button_press(void){
   int16 timeout;

   timeout_error=FALSE;
   timeout=0;
   while(input(PUSH_BUTTON) && (++timeout<50000)) // 1/2 second
      delay_us(10);
   if(!input(PUSH_BUTTON))
      return(TRUE); //button pressed
   else{
      timeout_error=TRUE;
      return(FALSE); //button not pressed timeout occurred
   }
}
```

How do I write variables to EEPROM that are not a byte?

The following is an example of how to read and write a floating point number from/to EEPROM. The same concept may be used for structures, arrays or any other type.

- n is an offset into the EEPROM.
- For floats you must increment it by 4.
- For example, if the first float is at 0, the second one should be at 4, and the third at 8.

```
WRITE_FLOAT_EXT_EEPROM( long int n, float data) {
   int i;
   for (i = 0; i < 4 ; i++)
     write_ ext_ eeprom(i + n, *(((int 8 *)&data + i) ) ;
}

float READ_FLOAT_EXT_EEPROM( long int n) {
   int i;
   float data;
   for (i = 0; i < 4; i++)
     *(((int 8 *)&data) + i) = read_ ext_ eeprom(i + n);
   return(data);
}
```

How does one map a variable to an I/O port?

Two methods are as follows:

```
#byte   PORTB  =    6   //Just an example, check the
#define ALL_OUT 0              //DATA sheet for the correct
#define ALL_IN  0xff           //address for your chip
main() {
    int i;

    set_tris_b(ALL_OUT);
    PORTB = 0;// Set all pins low
    for(i=0;i<=127;++i)     // Quickly count from 0 to 127
          PORTB=i;          // on the I/O port pin
    set_tris_b(ALL_IN);
    i = PORTB;              // i now contains the portb value.
}
```

Remember when using the #BYTE, the created variable is treated like memory. You must maintain the tri-state control registers yourself via the SET_TRIS_X function. Following is an example of placing a structure on an I/O port:

```
struct    port_b_layout
    {int data : 4;
    int rw : 1;
    int cd : 1;
      int enable : 1;
      int reset  : 1; };
struct    port_b_layout  port_b;
#byte port_b  = 6
struct port_b_layout  const  INIT_1  = {0, 1,1, 1,1 };
struct port_b_layout  const  INIT_2  = {3, 1,1, 1,0 };
struct port_b_layout  const  INIT_3  = {0, 0,0, 0,0 };
struct port_b_layout  const  FOR_SEND = {0,0,0, 0,0 };
                                  // All outputs
struct    port_b_layout  const  FOR_READ = {15,0,0, 0,0 };
                                  // Data is an input
main() {
    int x;
    set_tris_b((int)FOR_SEND);    // The constant
                                  // structure is
                                  // treated like
                                  // a byte and
                                  // is used to
                                  // set the data
                                  // direction
    port_b = INIT_1;
    delay_us(25);

    port_b = INIT_2;              // These constant structures delay_us(25);
                                  // are used to set all fields
    port_b = INIT_3;              // on the port with a single
                                  // command

    set_tris_b((int)FOR_READ);
    port_b.rw=0;
                                  // Here the individual
    port_b.cd=1;                  // fields are accessed
      port_b.enable=0;            // independently.
    x = port_b.data;
      port_b.enable=0
}
```

How does the compiler determine TRUE and FALSE on expressions?

When relational expressions are assigned to variables, the result is always 0 or 1.

For example:

```
bytevar = 5>0;     //bytevar will be 1
bytevar = 0>5;     //bytevar will be 0
```

The same is true when relational operators are used in expressions.

For example:

```
bytevar = (x>y)*4;
```

is the same as:

```
if( x>y )
  bytevar=4;
else
  bytevar=0;
```

SHORT INTs (bit variables) are treated the same as relational expressions. They evaluate to 0 or 1.

When expressions are converted to relational expressions or SHORT INTs, the result will be FALSE (or 0) when the expression is 0, otherwise the result is TRUE (or 1).

For example:

```
bytevar = 54;
bitvar = bytevar;     //bitvar will be 1 (bytevar ! = O)
if(bytevar)           //will be TRUE
bytevar = 0;
bitvar = bytevar;     //bitvar will be 0
```

How does the PIC® connect to a PC?

A level converter should be used to convert the TTL (0-5V_ levels that the PIC® operates with to the RS-232 voltages (+/- 3-12V) used by the PIC®. The following is a popular configuration using the MAX232 chip as a level converter.

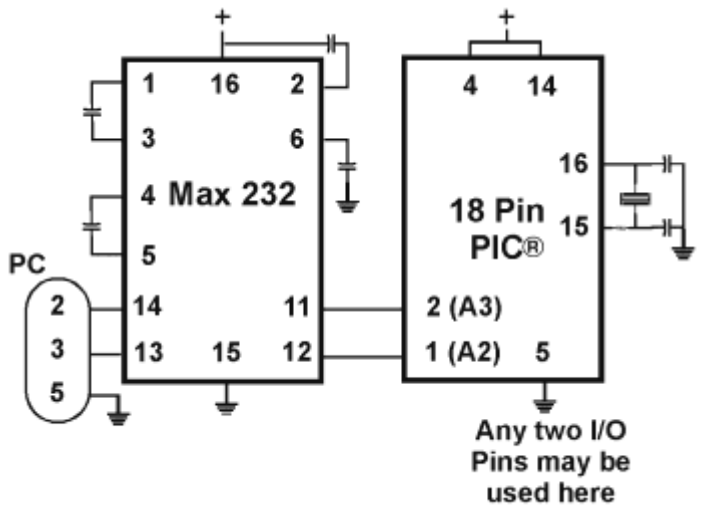

How does the PIC® connect to an I2C device?

Two I/O lines are required for I2C. Both lines must have pullup registers. Often the I2C device will have a H/W selectable address. The address set must match the address in S/W. The example programs all assume the selectable address lines are grounded.

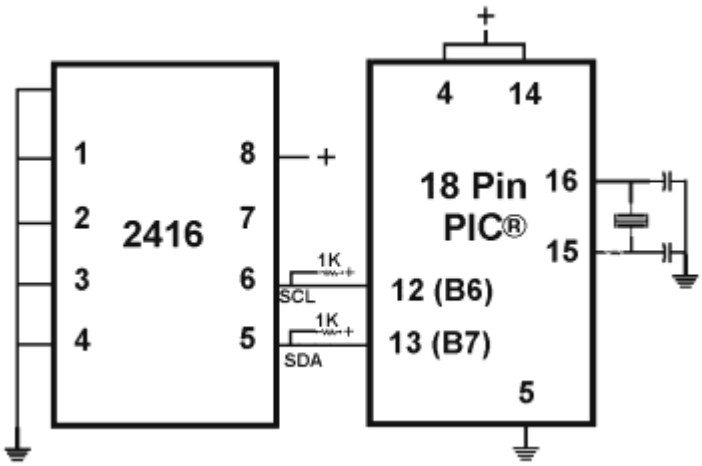

How much time do math operations take?

Unsigned 8 bit operations are quite fast and floating point is very slow. If possible consider fixed point instead of floating point. For example instead of "float cost_in_dollars;" do "long cost_in_cents;". For trig formulas consider a lookup table instead of real time calculations (see EX_SINE.C for an example). The following are some rough times on a 14-bit PIC®. Note times will vary depending on memory banks used.

20 mhz PIC16

	int8 [us]	int16 [us]	int32	float

			[us]	[us]
+	0.6	1.4	3	111.
-	0.6	1.4	3	113.
*	11.1	47.2	132	178.
/	23.2	70.8	239.2	330.
exp()	*	*	*	1697.3
ln()	*	*	*	2017.7
sin()	*	*	*	2184.5

40 mhz PIC18

	int8 [us]	int16 [us]	int32 [us]	float [us]
+	0.3	0.4	0.6	51.3
-	0.3	0.4	0.6	52.3
*	0.4	3.2	22.2	35.8
/	11.3	32	106.6	144.9
exp()	*	*	*	510.4
ln()	*	*	*	644.8
sin()	*	*	*	698.7

Instead of 800, the compiler calls 0. Why?

The PIC® ROM address field in opcodes is 8-10 Bits depending on the chip and specific opcode. The rest of the address bits come from other sources. For example, on the 174 chip to call address 800 from code in the first page you will see:

```
BSF     0A,3
CALL    0
```

The call 0 is actually 800H since Bit 11 of the address (Bit 3 of PCLATH, Reg 0A) has been set.

Instead of A0, the compiler is using register 20. Why?

The PIC® RAM address field in opcodes is 5-7 bits long, depending on the chip. The rest of the address field comes from the status register. For example, on the 74 chip to load A0 into W you will see:

```
BSF 3,5
MOVFW     20
```

Note that the BSF may not be immediately before the access since the compiler optimizes out the redundant bank switches.

What can be done about an OUT OF RAM error?

The compiler makes every effort to optimize usage of RAM. Understanding the RAM allocation can be a help in designing the program structure. The best re-use of RAM is accomplished when local variables are used with lots of functions. RAM is re-used between functions not active at the same time. See the NOT ENOUGH RAM error message in this manual for a more detailed example.

RAM is also used for expression evaluation when the expression is complex. The more complex the expression, the more scratch RAM locations the compiler will need to allocate to that expression. The RAM allocated is reserved during the execution of the entire function but may be re-used between expressions within the function. The total RAM required for a function is the sum of the parameters, the local variables and the largest number of scratch locations required for any expression within the function. The RAM required for a function is shown in the call tree after the RAM=. The RAM stays used when the function calls another function and new RAM is allocated for the new function. However when a function RETURNS the RAM may be re-used by another function called by the parent. Sequential calls to functions each with their own local variables is very efficient use of RAM as opposed to a large function with local variables declared for the entire process at once.

Be sure to use SHORT INT (1 bit) variables whenever possible for flags and other boolean variables. The compiler can pack eight such variables into one byte location. The compiler does this automatically whenever you use SHORT INT. The code size and ROM size will be smaller.

Finally, consider an external memory device to hold data not required frequently. An external 8 pin EEPROM or SRAM can be connected to the PIC® with just 2 wires and provide a great deal of additional storage capability. The compiler package includes example drivers for these devices. The primary drawback is a slower access time to read and write the data. The SRAM will have fast read and write with memory being lost when power fails. The EEPROM will have a very long write cycle, but can retain the data when power is lost.

What is an easy way for two or more PICs® to communicate?

There are two example programs (EX_PBUSM.C and EX_PBUSR.C) that show how to use a simple one-wire interface to transfer data between PICs®. Slower data can use pin B0 and the EXT interrupt. The built-in UART may be used for high speed transfers. An RS232 driver chip may be used for long distance operations. The RS485 as well as the high speed UART require 2 pins and minor software changes. The following are some hardware configurations.

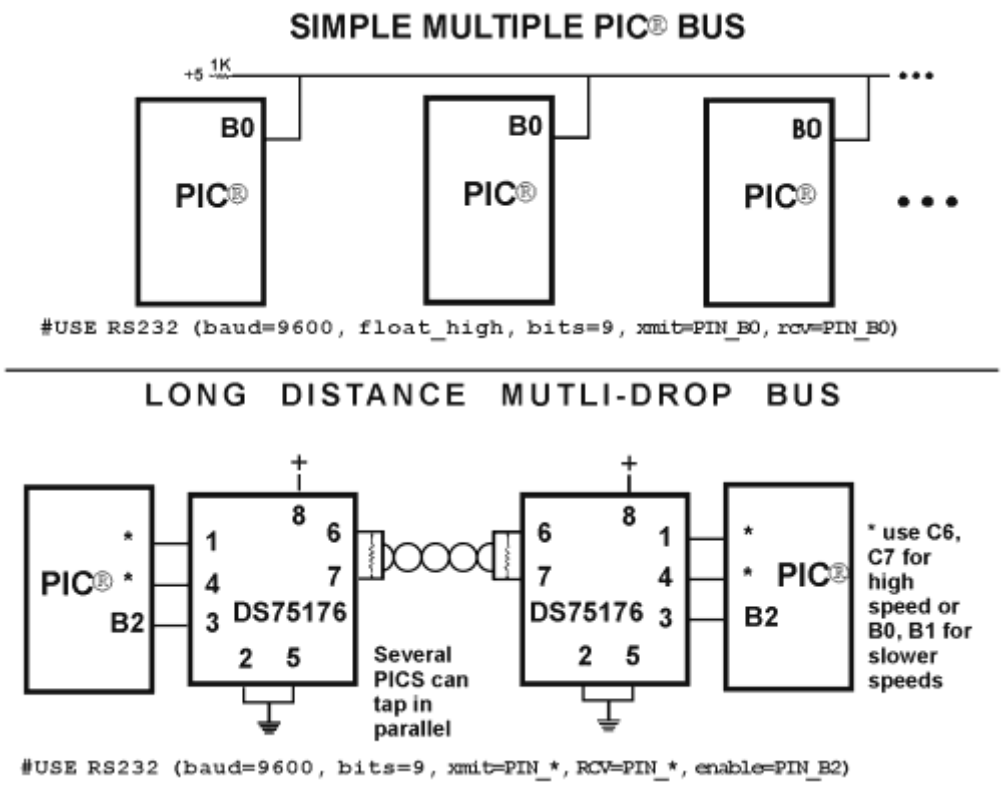

What is an easy way for two or more PICs® to communicate?

There are two example programs (EX_PBUSM.C and EX_PBUSR.C) that show how to use a simple one-wire interface to transfer data between PICs®. Slower data can use pin B0 and the EXT interrupt. The built-in UART may be used for high speed transfers. An RS232 driver chip may be used for long distance operations. The RS485 as well as the high speed UART require 2 pins and minor software changes. The following are some hardware configurations.

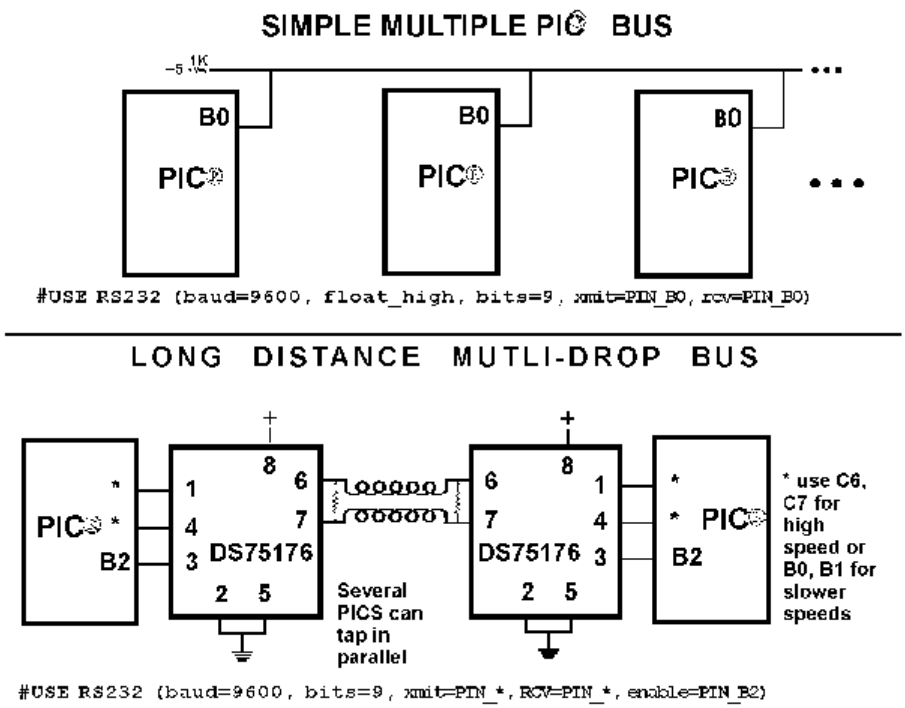

What is the format of floating point numbers?

CCS uses the same format Microchip uses in the 14000 calibration constants. PCW users have a utility Numeric Converter that will provide easy conversion to/from decimal, hex and float in a small window in the Windows IDE. See EX_FLOAT.C for a good example of using floats or float types variables. The format is as follows:

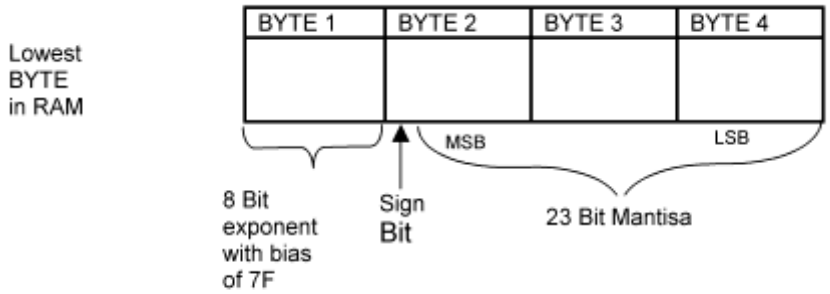

Example Number				
0	00	00	00	00
1	7F	00	00	00
-1	7F	80	00	00
10	82	20	00	00
100	85	48	00	00
123.45	85	76	E6	66
123.45E20	C8	27	4E	53
123.45 E-20	43	36	2E	17

Why does the .LST file look out of order?

The list file is produced to show the assembly code created for the C source code. Each C source line has the corresponding assembly lines under it to show the compiler's work. The following three special cases make the .LST file look strange to the first time viewer. Understanding how the compiler is working in these special cases will make the .LST file appear quite normal and very useful.

1. Stray code near the top of the program is sometimes under what looks like a non-executable source line.

Some of the code generated by the compiler does not correspond to any particular source line. The compiler will put this code either near the top of the program or sometimes under a #USE that caused subroutines to be generated.

2. The addresses are out of order.

The compiler will create the .LST file in the order of the C source code. The linker has re-arranged the code to properly fit the functions into the best code pages and the best half of a code page. The resulting code is not in source order. Whenever the compiler has a discontinuity in the .LST file, it will put a * line in the file. This is most often seen between functions and in places where INLINE functions are called. In the case of an INLINE function, the addresses will continue in order up where the source for the INLINE function is located.

3. The compiler has gone insane and generated the same instruction over and over.

For example:

```
..........A=0;
03F:      CLRF  15
*
46:CLRF  15
*
051:      CLRF  15
*
113:      CLRF  15
```

This effect is seen when the function is an INLINE function and is called from more than one place. In the above case, the A=0 line is in an INLINE function called in four places. Each place it is called from gets a new copy of the code. Each instance of the code is shown along with the original source line, and the result may look unusual until the addresses and the * are noticed.

Why does the compiler show less RAM than there really is?

Some devices make part of the RAM much more ineffective to access than the standard RAM. In particular, the 509, 57, 66, 67,76 and 77 devices have this problem.

By default, the compiler will not automatically allocate variables to the problem RAM and, therefore, the RAM available will show a number smaller than expected.

There are three ways to use this RAM:
1. Use #BYTE or #BIT to allocate a variable in this RAM. Do NOT create a pointer to these variables.

Example:

```
#BYTE counter=0x30
```

2. Use Read_Bank and Write_Bank to access the RAM like an array. This works well if you need to allocate an array in this RAM.

Example:

```
For(i=0;i<15;i++)
   Write_Bank(1,i,getc());
For(i=0;i<=15;i++)
   PUTC(Read_Bank(1,i));
```

3. You can switch to larger pointers for full RAM access (this takes more ROM). In PCB add *=8 to the #device and in PCM/PCH add *=16 to the #device.

Example:

```
#DEVICE PIC16C77  *=16
```

or

```
#include <16C77.h>
#device *=16
```

Why does the compiler use the obsolete TRIS?

The use of TRIS causes concern for some users. The Microchip data sheets recommend not using TRIS instructions for upward compatibility. If you had existing ASM code and it used TRIS then it would be more difficult to port to a new Microchip part without TRIS. C does not have this problem, however; the compiler has a device database that indicates specific characteristics for every part. This includes information on whether the part has a TRIS and a list of known problems with the part. The latter question is answered by looking at the device errata.

CCS makes every attempt to add new devices and device revisions as the data and errata sheets become available.

PCW users can edit the device database. If the use of TRIS is a concern, simply change the database entry for your part and the compiler will not use it.

Why is the RS-232 not working right?

1. The PIC® is Sending Garbage Characters.

   A. Check the clock on the target for accuracy. Crystals are usually not a problem but RC oscillators can cause trouble with RS-232. Make sure the #USE DELAY matches the actual clock frequency.

   B. Make sure the PC (or other host) has the correct baud and parity setting.

   C. Check the level conversion. When using a driver/receiver chip, such as the MAX 232, do not use INVERT when making direct connections with resistors and/or diodes. You probably need the INVERT option in the #USE RS232.

   D. Remember that PUTC(6) will send an ASCII 6 to the PC and this may not be a visible character. PUTC('A') will output a visible character A.

2. The PIC® is Receiving Garbage Characters.

   A. Check all of the above.

3. Nothing is Being Sent.

A. Make sure that the tri-state registers are correct. The mode (standard, fast, fixed) used will be whatever the mode is when the #USE RS232 is encountered. Staying with the default STANDARD mode is safest.

B. Use the following main() for testing:

```
main() {
   while(TRUE)
       putc('U');
}
```

Check the XMIT pin for activity with a logic probe, scope or whatever you can. If you can look at it with a scope, check the bit time (it should be 1/BAUD). Check again after the level converter.

4. Nothing is being received.

First be sure the PIC® can send data. Use the following main() for testing:

```
main() {
    printf("start");
      while(TRUE)
         putc( getc()+1 );
}
```

When connected to a PC typing A should show B echoed back.
If nothing is seen coming back (except the initial "Start"), check the RCV pin on the PIC® with a logic probe. You should see a HIGH state and when a key is pressed at the PC, a pulse to low. Trace back to find out where it is lost.

5. The PIC® is always receiving data via RS-232 even when none is being sent.

A. Check that the INVERT option in the USE RS232 is right for your level converter. If the RCV pin is HIGH when no data is being sent, you should NOT use INVERT. If the pin is low when no data is being sent, you need to use INVERT.

B. Check that the pin is stable at HIGH or LOW in accordance with A above when no data is being sent.

C. When using PORT A with a device that supports the SETUP_ADC_PORTS function make sure the port is set to digital inputs. This is not the default. The same is true for devices with a comparator on PORT A.

6. Compiler reports INVALID BAUD RATE.

A. When using a software RS232 (no built-in UART), the clock cannot be really slow when fast baud rates are used and cannot be really fast with slow baud rates. Experiment with the clock/baud rate values to find your limits.

B. When using the built-in UART, the requested baud rate must be within 3% of a rate that can be achieved for no error to occur. Some parts have internal bugs with BRGH set to 1 and the compiler will not use this unless you specify BRGH1OK in the #USE RS232 directive.

EXAMPLE PROGRAMS

EXAMPLE PROGRAMS

A large number of example programs are included with the software. The following is a list of many of the programs and some of the key programs are re-printed on the following pages. Most programs will work with any chip by just changing the #INCLUDE line that includes the device information. All of the following programs have wiring instructions at the beginning of the code in a comment header. The SIOW.EXE program included in the program directory may be used to demonstrate the example programs. This program will use a PC COM port to communicate with the target.

Generic header files are included for the standard PIC® parts. These files are in the DEVICES directory. The pins of the chip are defined in these files in the form PIN_B2. It is recommended that for a given project, the file is copied to a project header file and the PIN_xx defines be changed to match the actual hardware. For example; LCDRW (matching the mnemonic on the schematic). Use the generic include files by placing the following in your main .C file:
#include <16C74.H>

LIST OF COMPLETE EXAMPLE PROGRAMS (in the EXAMPLES directory)

EX_14KAD.C
An analog to digital program with calibration for the PIC14000

EX_1920.C
Uses a Dallas DS1920 button to read temperature

EX_8PIN.C
Demonstrates the use of 8 pin PICs with their special I/O requirements

EX_92LCD.C
Uses a PIC16C92x chip to directly drive LCD glass

EX_AD12.C
Shows how to use an external 12 bit A/D converter

EX_ADMM.C
A/D Conversion example showing min and max analog readings

EX_ADMM10.C
Similar to ex_admm.c, but this uses 10bit A/D readings.

EX_ADMM_STATS.C
Similar to ex_admm.c, but this uses also calculates the mean and standard deviation.

EX_BOOTLOAD.C
A stand-alone application that needs to be loaded by a bootloader (see ex_bootloader.c for a bootloader).

EX_BOOTLOADER.C
A bootloader, loads an application onto the PIC (see ex_bootload.c for an application).

EX_CAN.C
Receive and transmit CAN packets.

EX_CHECKSUM.C
Determines the checksum of the program memory, verifies it agains the checksum that was written to the USER ID location of the PIC.

EX_CCP1S.C
Generates a precision pulse using the PIC CCP module

EX_CCPMP.C
Uses the PIC CCP module to measure a pulse width

EX_COMP.C
Uses the analog comparator and voltage reference available on some PIC s

EX_CRC.C
Calculates CRC on a message showing the fast and powerful bit operations

EX_CUST.C
Change the nature of the compiler using special preprocessor directives

EX_FIXED.C
Shows fixed point numbers

EX_DPOT.C
Controls an external digital POT

EX_DTMF.C
Generates DTMF tones

EX_ENCOD.C
Interfaces to an optical encoder to determine direction and speed

EX_EXPIO.C
Uses simple logic chips to add I/O ports to the PIC

EX_EXSIO.C
Shows how to use a multi-port external UART chip

EX_EXTEE.C
Reads and writes to an external EEPROM

EX_EXTDYNMEM.C
Uses addressmod to create a user defined storage space, where a new qualifier is created that reads/writes to an extrenal RAM device.

EX_FAT.C
An example of reading and writing to a FAT file system on an MMC/SD card.

EX_FLOAT.C
Shows how to use basic floating point

EX_FREQC.C
A 50 mhz frequency counter

EX_GLCD.C
Displays contents on a graphic LCD, includes shapes and text.

EX_GLINT.C
Shows how to define a custom global interrupt hander for fast interrupts

EX_HPINT.C
An example of how to use the high priority interrupts of a PIC18.

EX_HUMIDITY.C
How to read the humidity from a Humirel HT3223/HTF3223 Humidity module

EX_ICD.C
Shows a simple program for use with Microchips ICD debugger

EX_INTEE.C
Reads and writes to the PIC internal EEPROM

EX_INTFL.C
An example of how to write to the program memory of the PIC.

EX_LCDKB.C
Displays data to an LCD module and reads data for keypad

EX_LCDTH.C
Shows current, min and max temperature on an LCD

EX_LED.C
Drives a two digit 7 segment LED

EX_LINBUS_MASTER.C
An example of how to use the LINBUS mode of a PIC's EAUSART. Talks to the EX_LINBUS_SLAVE.C example.

EX_LINBUS_SLAVE.C
An example of how to use the LINBUS mode of a PIC's EAUSART. Talks to the EX_LINBUS_MASTER.C example.

EX_LOAD.C
Serial boot loader program for chips like the 16F877

EX_LOGGER.C
A simple temperature data logger, uses the flash program memory for saving data

EX_MACRO.C
Shows how powerful advanced macros can be in C

EX_MALLOC.C
An example of dynamic memory allocation using malloc().

EX_MCR.C
An example of reading magnetic card readers.

EX_MMCSD.C
An example of using an MMC/SD media card as an external EEPROM. To use this card with a FAT file system, see ex_fat.c

EX_MODBUS_MASTER.C
An example MODBUS application, this is a master and will talk to the ex_modbus_slave.c example.

EX_MODBUS_SLAVE.C
An example MODBUS application, this is a slave and will talk to the ex_modbus_master.c example.

EX_MOUSE.C
Shows how to implement a standard PC mouse on a PIC

EX_MXRAM.C
Shows how to use all the RAM on parts with problem memory allocation

EX_PATG.C
Generates 8 square waves of different frequencies

EX_PBUSM.C
Generic PIC to PIC message transfer program over one wire

EX_PBUSR.C

Implements a PIC to PIC shared RAM over one wire

EX_PBUTT.C
Shows how to use the B port change interrupt to detect pushbuttons

EX_PGEN.C
Generates pulses with period and duty switch selectable

EX_PLL.C
Interfaces to an external frequency synthesizer to tune a radio

EX_POWER_PWM.C
How to use the enhanced PWM module of the PIC18 for motor controls.

EX_PSP.C
Uses the PIC PSP to implement a printer parallel to serial converter

EX_PULSE.C
Measures a pulse width using timer0

EX_PWM.C
Uses the PIC CCP module to generate a pulse stream

EX_QSORT.C
An example of using the stdlib function qsort() to sort data. Pointers to functions is used by qsort() so the user can specify their sort algorithm.

EX_REACT.C
Times the reaction time of a relay closing using the CCP module

EX_RFID.C
An example of how to read the ID from a 125kHz RFID transponder tag.

EX_RMSDB.C
Calculates the RMS voltage and dB level of an AC signal

EX_RS485.C
An application that shows a multi-node communication protocol commonly found on RS-485 busses.

EX_RTC.C
Sets and reads an external Real Time Clock using RS232

EX_RTCLK.C
Sets and reads an external Real Time Clock using an LCD and keypad

EX_RTCTIMER.C
How to use the PIC's hardware timer as a real time clock.

EX_RTOS_DEMO_X.C
9 examples are provided that show how to use CCS's built-in RTOS (Real Time Operating System).

EX_SINE.C
Generates a sine wave using a D/A converter

EX_SISR.C
Shows how to do RS232 serial interrupts

EX_STISR.C
Shows how to do RS232 transmit buffering with interrupts

EX_SLAVE.C
Simulates an I2C serial EEPROM showing the PIC slave mode

EX_SPEED.C
Calculates the speed of an external object like a model car

EX_SPI.C
Communicates with a serial EEPROM using the H/W SPI module

EX_SPI_SLAVE.C
How to use the PIC's MSSP peripheral as a SPI slave. This example will talk to the ex_spi.c example.

EX_SQW.C
Simple Square wave generator

EX_SRAM.C
Reads and writes to an external serial RAM

EX_STEP.C
Drives a stepper motor via RS232 commands and an analog input

EX_STR.C
Shows how to use basic C string handling functions

EX_STWT.C
A stop Watch program that shows how to user a timer interrupt

EX_SYNC_MASTER.C
EX_SYNC_SLAVE.C
An example of using the USART of the PIC in synchronous mode. The master and slave examples talk to each other.

EX_TANK.C
Uses trig functions to calculate the liquid in a odd shaped tank

EX_TEMP.C
Displays (via RS232) the temperature from a digital sensor

EX_TGETC.C
Demonstrates how to timeout of waiting for RS232 data

EX_TONES.C
Shows how to generate tones by playing "Happy Birthday"

EX_TOUCH.C
Reads the serial number from a Dallas touch device

EX_USB_HID.C
Implements a USB HID device on the PIC16C765 or an external USB chip

EX_USB_SCOPE.C
Implements a USB bulk mode transfer for a simple oscilloscope on an ext USB chip

EX_USB_KBMOUSE.C
EX_USB_KBMOUSE2.C
Examples of how to implement 2 USB HID devices on the same device, by combining a mouse and keyboard.

EX_USB_SERIAL.C
EX_USB_SERIAL2.C
Examples of using the CDC USB class to create a virtual COM port for backwards compatability with legacy software.

EX_VOICE.C
Self learning text to voice program

EX_WAKUP.C
Shows how to put a chip into sleep mode and wake it up

EX_WDT.C
Shows how to use the PIC watch dog timer

EX_WDT18.C
Shows how to use the PIC18 watch dog timer

EX_X10.C
Communicates with a TW523 unit to read and send power line X10 codes

EX_EXTA.C
The XTEA encryption cipher is used to create an encrypted link between two PICs.

LIST OF INCLUDE FILES (in the DRIVERS directory)

14KCAL.C
Calibration functions for the PIC14000 A/D converter

2401.C
Serial EEPROM functions

2402.C
Serial EEPROM functions

2404.C
Serial EEPROM functions

2408.C
Serial EEPROM functions

24128.C
Serial EEPROM functions

2416.C
Serial EEPROM functions

24256.C
Serial EEPROM functions

2432.C
Serial EEPROM functions

2465.C
Serial EEPROM functions

25160.C
Serial EEPROM functions

25320.C
Serial EEPROM functions

25640.C
Serial EEPROM functions

25C080.C
Serial EEPROM functions

68HC68R1
C Serial RAM functions

68HC68R2.C
Serial RAM functions

74165.C
Expanded input functions

74595.C
Expanded output functions

9346.C
Serial EEPROM functions

9356.C
Serial EEPROM functions

9356SPI.C
Serial EEPROM functions (uses H/W SPI)

9366.C
Serial EEPROM functions

AD7705.C
A/D Converter functions

AD7715.C
A/D Converter functions

AD8400.C
Digital POT functions

ADS8320.C
A/D Converter functions

ASSERT.H
Standard C error reporting

AT25256.C
Serial EEPROM functions

AT29C1024.C
Flash drivers for an external memory chip

CRC.C
CRC calculation functions

CE51X.C
Functions to access the 12CE51x EEPROM

CE62X.C
Functions to access the 12CE62x EEPROM

CE67X.C
Functions to access the 12CE67x EEPROM

CTYPE.H
Definitions for various character handling functions

DS1302.C
Real time clock functions

DS1621.C
Temperature functions

DS1621M.C
Temperature functions for multiple DS1621 devices on the same bus

DS1631.C
Temperature functions

DS1624.C
Temperature functions

DS1868.C
Digital POT functions

ERRNO.H
Standard C error handling for math errors

FLOAT.H
Standard C float constants

FLOATEE.C
Functions to read/write floats to an EEPROM

INPUT.C
Functions to read strings and numbers via RS232

ISD4003.C
Functions for the ISD4003 voice record/playback chip

KBD.C
Functions to read a keypad

LCD.C
LCD module functions

LIMITS.H
Standard C definitions for numeric limits

LMX2326.C
PLL functions

LOADER.C
A simple RS232 program loader

LOCALE.H
Standard C functions for local language support

LTC1298.C
12 Bit A/D converter functions

MATH.H
Various standard trig functions

MAX517.C
D/A converter functions

MCP3208.C
A/D converter functions

NJU6355.C
Real time clock functions

PCF8570.C

Serial RAM functions

PIC_USB.H
Hardware layer for built-in PIC USB

SC28L19X.C
Driver for the Phillips external UART (4 or 8 port)

SETJMP.H
Standard C functions for doing jumps outside functions

STDDEF.H
Standard C definitions

STDIO.H
Not much here - Provided for standard C compatibility

STDLIB.H
String to number functions

STDLIBM.H
Standard C memory management functions

STRING.H
Various standard string functions

TONES.C
Functions to generate tones

TOUCH.C
Functions to read/write to Dallas touch devices

USB.H
Standard USB request and token handler code

USBN960X.C
Functions to interface to Nationals USBN960x USB chips

USB.C
USB token and request handler code, Also includes usb_desc.h and usb.h

X10.C
Functions to read/write X10 codes

```
////////////////////////////////////////////////////////////////
///                        EX_SQW.C                        ///
///   This program displays a message over the RS-232 and     ///
///   waits for any keypress to continue.  The program        ///
///   will then begin a 1khz square wave over I/O pin B0.     ///
///   Change both delay_us to delay_ms to make the            ///
///   frequency 1 hz.  This will be more visible on           ///
///   a LED.  Configure the CCS prototype card as follows:    ///
///   insert jumpers from 11 to 17, 12 to 18, and 42 to 47.   ///
////////////////////////////////////////////////////////////////

#ifdef __PCB__
#include <16C56.H>
#else
#include <16C84.H>
#endif

#use delay(clock=20000000)
#use rs232(baud=9600, xmit=PIN_A3, rcv=PIN_A2)

main()  {
```

```
   printf("Press any key to begin\n\r");
    getc();
    printf("1 khz signal activated\n\r");
    while (TRUE)  {
    output_high (PIN_B0);
    delay_us(500);
    output_low(PIN_B0);
    delay_us(500);
   }
}


///////////////////////////////////////////////////////////////
///                          EX_STWT.C                      ///
///    This program uses the RTCC (timer0) and interrupts    ///
///    to keep a real time seconds counter.  A simple stop   ///
///    watch function is then implemented.  Configure the    ///
///    CCS prototype card as follows, insert jumpers from:   ///
///    11 to 17 and 12 to 18.                                ///
///////////////////////////////////////////////////////////////

#include <16C84.H>
#use delay (clock=20000000)
#use rs232(baud=9600, xmit=PIN_A3, rcv=PIN_A2_
#define INTS_PER_SECOND 76        //(20000000/(4*256*256))
byte seconds;                     //Number of interrupts left
                                  //before a second has elapsed

#int_rtcc                         //This function is called
clock_isr() {                     //every time the RTCC (timer0)
                                 //overflows (255->0)
                                  //For this program this is apx
                                 //76 times per second.

   if(--int_count==0)  {
   ++seconds;
   int_count=INTS_PER_SECOND;

   }
}

main() {
   byte start;
   int_count=INTS_PER_SECOND;
   set_rtcc(0);
   setup_counters (RTCC_INTERNAL, RTCC_DIV_256);
   enable_interrupts (INT_RTCC);
   enable_interrupts(GLOBAL)
   do {
       printf ("Press any key to begin. \n\r");
       getc();
       start=seconds;
       printf("Press any key to stop. \n\r");
       getc();
       printf ("%u seconds.  \n\r", seconds-start);
   } while (TRUE);
}


///////////////////////////////////////////////////////////////
///                          EX_INTEE.C                     ///
///    This program will read and write to the '83 or '84    ///
///    internal EEPROM.  Configure the CCS prototype card as ///
///    follows: insert jumpers from 11 to 17 and 12 to 18.   ///
///////////////////////////////////////////////////////////////

#include <16C84.H>

#use delay(clock-100000000)
#use rs232 (baud=9600, xmit=PIN_A3, rv+PIN_A2)
```

```
#include <HEX.C>

main () {
   byte i,j,address, value;

   do {
       printf("\r\n\nEEPROM: \r\n")      //Displays contents
       for(i=0; i<3; ++i) {              //entire EEPROM
              for (j=0; j<=15; ++j) {    //in hex
                     printf("%2x", read_eeprom(i+16+j));

              }
              printf("\n\r");
       }
       printf ("\r\nlocation to change: ");
       address= gethex();
       printf ("\r\nNew value: ");
       value=gethex();

       write_eeprom (address, value);
   } while (TRUE)
}


///////////////////////////////////////////////////////////////
///     Library for a Microchip 93C56 configured for a x8     ///
///                                                           ///
///     org init_ext_eeprom();      Call before the other     ///
///                                 functions are used        ///
///                                                           ///
///     write_ext_eeprom(a,d);      Write the byte d to       ///
///                                 the address a             ///
///                                                           ///
///     d=read_ext_eeprom (a);      Read the byte d from      ///
///                                 the address a.            ///
///     The main program may define eeprom_select,            ///
///     eeprom_di, eeprom_do and eeprom_clk to override       ///
///     the defaults below.                                   ///
///////////////////////////////////////////////////////////////

#ifndef EEPROM_SELECT

#define EEPROM_SELECT      PIN_B7
#define EEPROM_CLK         PIN_B6
#define EEPROM_DI          PIN_B5
#define EEPROM_DO          PIN_B4

#endif

#define EEPROM_ADDRESS byte
#define EEPROM_SIZE        256

void init_ext_eeprom () {
   byte cmd[2];
   byte i;

   output_low(EEPROM_DI);
   output_low(EEPROM_CLK);
   output_low(EEPROM_SELECT);

   cmd[0]=0x80;
   cmd[1]=0x9;

   for (i=1; i<=4; ++i)
       shift_left(cmd, 2,0);
   output_high (EEPROM_SELECT);
   for (i=1; i<=12; ++i)  {
       output_bit(EEPROM_DI, shift_left(cmd, 2,0));
       output_high (EEPROM_CLK);
       output_low(EEPROM_CLK);
}
```

```
   output_low(EEPROM_DI);
   output_low(EEPROM_SELECT);
}

void write_ext_eeprom (EEPROM_ADDRESS address, byte data)  {
   byte cmd[3];
   byte i;

   cmd[0]=data;
   cmd[1]=address;
   cmd[2]=0xa;

   for(i=1;i<=4;++i)
       shift_left(cmd,3,0);
   output_high(EEPROM_SELECT);
   for(i=1;i<=20;++i) {
       output_bit (EEPROM_DI, shift_left (cmd,3,0));
       output_high (EEPROM_CLK);
       output_low(EEPROM_CLK);
   }
   output_low (EEPROM_DI);
   output_low (EEPROM_SELECT);
   delay_ms(11);
}

byte read_ext_eeprom(EEPROM_ADDRESS address) {
   byte cmd[3];
   byte i, data;

   cmd[0]=0;
   cmd[1]=address;
   cmd[2]=0xc;

   for(i=1;i<=4;++i)
       shift_left(cmd,3,0);
   output_high(EEPROM_SELECT);
   for(i=1;i<=20;++i) {
       output_bit (EEPROM_DI, shift_left (cmd,3,0));
       output_high (EEPROM_CLK);
       output_low(EEPROM_CLK);
       if (i>12)
              shift_left (&data, 1, input (EEPROM_DO));
   }
   output_low (EEPROM_SELECT);
   return(data);
}


////////////////////////////////////////////////////////////////
///   This file demonstrates how to use the real time         ///
///   operating system to schedule tasks and how to use       ///
///   the rtos_run function.                                  ///
///                                                           ///
///   this demo makes use of the PIC18F452 prototyping board  ///
////////////////////////////////////////////////////////////////

#include <18F452.h>
#use delay(clock=20000000)
#use rs232(baud=9600,xmit=PIN_C6,rcv=PIN_C7)
// this tells the compiler that the rtos functionality will be needed, that
// timer0 will be used as the timing device, and that the minor cycle for
// all tasks will be 500 miliseconds
#use rtos(timer=0,minor_cycle=100ms)
// each function that is to be an operating system task must have the #task
// preprocessor directive located above it.
// in this case, the task will run every second, its maximum time to run is
// less than the minor cycle but this must be less than or equal to the
// minor cycle, and there is no need for a queue at this point, so no
// memory will be reserved.
#task(rate=1000ms,max=100ms)
// the function can be called anything that a standard function can be called
```

```
void The_first_rtos_task ( )
{
   printf("1\n\r");
}
#task(rate=500ms,max=100ms)
void The_second_rtos_task ( )
{
   printf("\t2!\n\r");
}
#task(rate=100ms,max=100ms)
void The_third_rtos_task ( )
{
   printf("\t\t3\n\r");
}
// main is still the entry point for the program
void main ( )
{
   // rtos_run begins the loop which will call the task functions above at the
   // schedualed time
   rtos_run ( );
}


///////////////////////////////////////////////////////////////
///   This file demonstrates how to use the real time         ///
///   operating system rtos_terminate function                ///
///                                                           ///
///   this demo makes use of the PIC18F452 prototyping board  ///
///////////////////////////////////////////////////////////////

#include <18F452.h>
#use delay(clock=20000000)
#use rs232(baud=9600,xmit=PIN_C6,rcv=PIN_C7)
#use rtos(timer=0,minor_cycle=100ms)
// a counter will be kept
int8 counter;
#task(rate=1000ms,max=100ms)
void The_first_rtos_task ( )
{
   printf("1\n\r");
   // if the counter has reached the desired value, the rtos will terminate
   if(++counter==5)
      rtos_terminate ( );
}
#task(rate=500ms,max=100ms)
void The_second_rtos_task ( )
{
   printf("\t2!\n\r");
}
#task(rate=100ms,max=100ms)
void The_third_rtos_task ( )
{
   printf("\t\t3\n\r");
}
void main ( )
{
   // main is the best place to initialize resources the the rtos is dependent
   // upon
   counter = 0;
   rtos_run ( );
   // once the rtos_terminate function has been called, rtos_run will return
   // program control back to main
   printf("RTOS has been terminated\n\r");
}


///////////////////////////////////////////////////////////////
///   This file demonstrates how to use the real time         ///
///   operating system rtos_enable and rtos_disable functions ///
///                                                           ///
///   this demo makes use of the PIC18F452 prototyping board  ///
```

```
////////////////////////////////////////////////////////////////

#include <18F452.h>
#use delay(clock=20000000)
#use rs232(baud=9600,xmit=PIN_C6,rcv=PIN_C7)
#use rtos(timer=0,minor_cycle=100ms)
int8 counter;
// now that task names will be passed as parameters, it is best
// to declare function prototypes so that their are no undefined
// identifier errors from the compiler
#task(rate=1000ms,max=100ms)
void The_first_rtos_task ( );
#task(rate=500ms,max=100ms)
void The_second_rtos_task ( );
#task(rate=100ms,max=100ms)
void The_third_rtos_task ( );
void The_first_rtos_task ( ) {
   printf("1\n\r");
   if(counter==3)
   {
      // to disable a task, simply pass the task name
      // into the rtos_disable function
      rtos_disable(The_third_rtos_task);
   }
}
void The_second_rtos_task ( ) {
   printf("\t2!\n\r");
   if(++counter==10) {
      counter=0;
      // enabling tasks is similar to disabling them
      rtos_enable(The_third_rtos_task);
   }
}
void The_third_rtos_task ( ) {
   printf("\t\t3\n\r");
}
void main ( ) {
   counter = 0;
   rtos_run ( );
}



////////////////////////////////////////////////////////////////
///   This file demonstrates how to use the real time         ///
///   operating systems messaging functions                   ///
///                                                           ///
///   this demo makes use of the PIC18F452 prototyping board  ///
////////////////////////////////////////////////////////////////

#include <18F452.h>
#use delay(clock=20000000)
#use rs232(baud=9600,xmit=PIN_C6,rcv=PIN_C7)
#use rtos(timer=0,minor_cycle=100ms)
int8 count;
// each task will now be given a two byte queue
#task(rate=1000ms,max=100ms,queue=2)
void The_first_rtos_task ( );
#task(rate=500ms,max=100ms,queue=2)
void The_second_rtos_task ( );
void The_first_rtos_task ( ) {
   // the function rtos_msg_poll will return the number of messages in the
   // current tasks queue
   // always make sure to check that their is a message or else the read
   // function will hang
   if(rtos_msg_poll ( )>0){
      // the function rtos_msg_read, reads the first value in the queue
      printf("messages recieved by task1 : %i\n\r",rtos_msg_read ( ));
      // the funciton rtos_msg_send, sends the value given as the
      // second parameter to the function given as the first
      rtos_msg_send(The_second_rtos_task,count);
```

```
      count++;
   }
}
void The_second_rtos_task ( ) {
   rtos_msg_send(The_first_rtos_task,count);
   if(rtos_msg_poll ( )>0){
      printf("messages recieved by task2 : %i\n\r",rtos_msg_read ( ));
      count++;
   }
}
void main ( ) {
   count=0;
   rtos_run();
}


///////////////////////////////////////////////////////////////
///   This file demonstrates how to use the real time         ///
///   operating systems yield function                        ///
///                                                           ///
///   this demo makes use of the PIC18F452 prototyping board  ///
///////////////////////////////////////////////////////////////

#include <18F452.h>
#use delay(clock=20000000)
#use rs232(baud=9600,xmit=PIN_C6,rcv=PIN_C7)
#use rtos(timer=0,minor_cycle=100ms)
#task(rate=1000ms,max=100ms,queue=2)
void The_first_rtos_task ( );
#task(rate=500ms,max=100ms,queue=2)
void The_second_rtos_task ( );
void The_first_rtos_task ( ) {
   int count=0;
   // rtos_yield allows the user to break out of a task at a given point
   // and return to the same ponit when the task comes back into context
   while(TRUE){
      count++;
      rtos_msg_send(The_second_rtos_task,count);
      rtos_yield ( );
   }
}
void The_second_rtos_task ( ) {
   if(rtos_msg_poll( ))
   {
      printf("count is : %i\n\r",rtos_msg_read ( ));
   }
}
void main ( ) {
   rtos_run();
}


///////////////////////////////////////////////////////////////
///   This file demonstrates how to use the real time         ///
///   operating systems yield function signal and wait        ///
///   function to handle resources                            ///
///                                                           ///
///   this demo makes use of the PIC18F452 prototyping board  ///
///////////////////////////////////////////////////////////////

#include <18F452.h>
#use delay(clock=20000000)
#use rs232(baud=9600,xmit=PIN_C6,rcv=PIN_C7)
#use rtos(timer=0,minor_cycle=100ms)
// a semaphore is simply a shared system resource
// in the case of this example, the semaphore will be the red LED
int8 sem;
#define RED PIN_B5
#task(rate=1000ms,max=100ms,queue=2)
void The_first_rtos_task ( );
#task(rate=1000ms,max=100ms,queue=2)
```

```
void The_second_rtos_task ( );
void The_first_rtos_task ( ) {
   int i;
   // this will decrement the semaphore variable to zero which signals
   // that no more user may use the resource
   rtos_wait(sem);
   for(i=0;i<5;i++){
      output_low(RED); delay_ms(20); output_high(RED);
      rtos_yield ( );
   }
   // this will inrement the semaphore variable to zero which then signals
   // that the resource is available for use
   rtos_signal(sem);
}
void The_second_rtos_task ( ) {
   int i;
   rtos_wait(sem);
   for(i=0;i<5;i++){
      output_high(RED); delay_ms(20); output_low(RED);
      rtos_yield ( );
   }
   rtos_signal(sem);
}
void main ( ) {
   // sem is initialized to the number of users allowed by the resource
   // in the case of the LED and most other resources that limit is one
   sem=1;
   rtos_run();
}


///////////////////////////////////////////////////////////////
///   This file demonstrates how to use the real time         ///
///   operating systems await function                        ///
///                                                           ///
///   this demo makes use of the PIC18F452 prototyping board  ///
///////////////////////////////////////////////////////////////

#include <18F452.h>
#use delay(clock=20000000)
#use rs232(baud=9600,xmit=PIN_C6,rcv=PIN_C7)
#use rtos(timer=0,minor_cycle=100ms)
#define RED PIN_B5
#define GREEN PIN_A5
int8 count;
#task(rate=1000ms,max=100ms,queue=2)
void The_first_rtos_task ( );
#task(rate=1000ms,max=100ms,queue=2)
void The_second_rtos_task ( );
void The_first_rtos_task ( ) {
   // rtos_await simply waits for the given expression to be true
   // if it is not true, it acts like an rtos_yield and passes the system
   // to the next task
   rtos_await(count==10);
   output_low(GREEN); delay_ms(20); output_high(GREEN);
   count=0;
}
void The_second_rtos_task ( ) {
   output_low(RED); delay_ms(20); output_high(RED);
   count++;
}
void main ( ) {
   count=0;
   rtos_run();
}


///////////////////////////////////////////////////////////////
///   This file demonstrates how to use the real time         ///
///   operating systems statistics features                   ///
///                                                           ///
```

```
///   this demo makes use of the PIC18F452 prototyping board  ///
/////////////////////////////////////////////////////////////////

#include <18F452.h>
#use delay(clock=20000000)
#use rs232(baud=9600,xmit=PIN_C6,rcv=PIN_C7)
#use rtos(timer=0,minor_cycle=100ms,statistics)
// This structure must be defined inorder to retrieve the statistical
// information
struct rtos_stats {
   int32 task_total_ticks;       // number of ticks the task has used
   int16 task_min_ticks;         // the minimum number of ticks used
   int16 task_max_ticks;         // the maximum number of ticks ueed
   int16 hns_per_tick;           // us = (ticks*hns_per_tic)/10
};
#task(rate=1000ms,max=100ms)
void The_first_rtos_task ( );
#task(rate=1000ms,max=100ms)
void The_second_rtos_task ( );
void The_first_rtos_task ( ) {
   struct rtos_stats stats;
   rtos_stats(The_second_rtos_task,&stats);
   printf ( "\n\r" );
   printf ( "task_total_ticks : %Lius\n\r" ,
            (int32)(stats.task_total_ticks)*stats.hns_per_tick );
   printf ( "task_min_ticks   : %Lius\n\r" ,
            (int32)(stats.task_min_ticks)*stats.hns_per_tick );
   printf ( "task_max_ticks   : %Lius\n\r" ,
            (int32)(stats.task_max_ticks)*stats.hns_per_tick );
   printf ("\n\r");
}
void The_second_rtos_task ( ) {
   int i, count = 0;
   while(TRUE) {
      if(rtos_overrun(the_second_rtos_task)) {
         printf("The Second Task has Overrun\n\r\n\r");
         count=0;
      }
      else
        count++;

      for(i=0;i<count;i++)
         delay_ms(50);

      rtos_yield();
   }
}
void main ( ) {
   rtos_run ( );
}


/////////////////////////////////////////////////////////////////
///   This file demonstrates how to create a basic command    ///
///   line using the serial port withought having to stop     ///
///   RTOS operation, this can also be considered a           ///
///   semi kernal for the RTOS.                               ///
///                                                           ///
///   this demo makes use of the PIC18F452 prototyping board  ///
/////////////////////////////////////////////////////////////////

#include <18F452.h>
#use delay(clock=20000000)
#use rs232(baud=9600,xmit=PIN_C6,rcv=PIN_C7)
#use rtos(timer=0,minor_cycle=100ms)
#define RED PIN_B5
#define GREEN PIN_A5
#include <string.h>
// this character array will be used to take input from the prompt
char input [ 30 ];
// this will hold the current position in the array
```

```
int index;
// this will signal to the kernal that input is ready to be processed
int1 input_ready;
// different commands
char en1 [ ] = "enable1";
char en2 [ ] = "enable2";
char dis1 [ ] = "disable1";
char dis2 [ ] = "disable2";
#task(rate=1000ms,max=100ms)
void The_first_rtos_task ( );
#task(rate=1000ms,max=100ms)
void The_second_rtos_task ( );
#task(rate=500ms,max=100ms)
void The_kernal ( );
// serial interupt
#int_rda
void serial_interrupt ( )
{
   if(index<29) {
      input [ index ] = getc ( );   // get the value in the serial recieve reg
      putc ( input [ index ] );     // display it on the screen
      if(input[index]==0x0d){       // if the input was enter
         putc('\n');
         input [ index ] = '\0';    // add the null character
         input_ready=TRUE;          // set the input read variable to true
         index=0;                   // and reset the index
      }
      else if (input[index]==0x08){
         if ( index > 1 ) {
            putc(' ');
            putc(0x08);
            index-=2;
         }
      }
      index++;
   }
   else {
      putc ( '\n' );
      putc ( '\r' );
      input [ index ] = '\0';
      index = 0;
      input_ready = TRUE;
   }
}
void The_first_rtos_task ( ) {
   output_low(RED); delay_ms(50); output_high(RED);
}
void The_second_rtos_task ( ) {
   output_low(GREEN); delay_ms(20); output_high(GREEN);
}
void The_kernal ( ) {
   while ( TRUE ) {
      printf ( "INPUT:> " );
      while(!input_ready)
         rtos_yield ( );
      printf ( "%S\n\r%S\n\r", input , en1 );
      if ( !strcmp( input , en1 ) )
         rtos_enable ( The_first_rtos_task );
      else if ( !strcmp( input , en2 ) )
         rtos_enable ( The_second_rtos_task );
      else if ( !strcmp( input , dis1 ) )
         rtos_disable ( The_first_rtos_task );
      else if ( !strcmp ( input , dis2 ) )
         rtos_disable ( The_second_rtos_task );
      else
         printf ( "Error: unknown command\n\r" );
      input_ready=FALSE;
      index=0;
   }
}
void main ( ) {
```

```
   // initialize input variables
   index=0;
   input_ready=FALSE;
   // initialize interrupts
   enable_interrupts(int_rda);
   enable_interrupts(global);
   rtos_run();
}
```

SOFTWARE LICENSE AGREEMENT

SOFTWARE LICENSE AGREEMENT

Carefully read this Agreement prior to opening this package. By opening this package, you agree to abide by the following provisions.
If you choose not to accept these provisions, promptly return the unopened package for a refund.

All materials supplied herein are owned by Custom Computer Services, Inc. ("CCS") and is protected by copyright law and international copyright treaty. Software shall include, but not limited to, associated media, printed materials, and electronic documentation.

These license terms are an agreement between You ("Licensee") and CCS for use of the Software ("Software"). By installation, copy, download, or otherwise use of the Software, you agree to be bound by all the provisions of this License Agreement.

1. **LICENSE -** CCS grants Licensee a license to use in one of the two following options:
   1) Software may be used solely by single-user on multiple computer systems;
   2) Software may be installed on single-computer system for use by multiple users. Use of Software by additional users or on a network requires payment of additional fees.

   Licensee may transfer the Software and license to a third party; and such third party will be held to the terms of this Agreement. All copies of Software must be transferred to the third party or destroyed. Written notification must be sent to CCS for the transfer to be valid.

2. **APPLICATIONS SOFTWARE -** Use of this Software and derivative programs created by Licensee shall be identified as Applications Software, are not subject to this Agreement. Royalties are not be associated with derivative programs.

3. **WARRANTY -** CCS warrants the media to be free from defects in material and workmanship, and that the Software will substantially conform to the related documentation for a period of thirty (30) days after the date of purchase. CCS does not warrant that the Software will be free from error or will meet your specific requirements. If a breach in warranty has occurred, CCS will refund the purchase price or substitution of Software without the defect.

4. **LIMITATION OF LIABILITY AND DISCLAIMER OF WARRANTIES –** CCS and its suppliers disclaim any expressed warranties (other than the warranty

contained in Section 3 herein), all implied warranties, including, but not limited to, the implied warranties of merchantability, of satisfactory quality, and of fitness for a particular purpose, regarding the Software.

Neither CCS, nor its suppliers, will be liable for personal injury, or any incidental, special, indirect or consequential damages whatsoever, including, without limitation, damages for loss of profits, loss of data, business interruption, or any other commercial damages or losses, arising out of or related to your use or inability to use the Software.

Licensee is responsible for determining whether Software is suitable for Applications.

©1994-2015 Custom Computer Services, Inc.
ALL RIGHTS RESERVED WORLDWIDE
PO BOX 2452
BROOKFIELD, WI 53008 U.S.A.

INDEX

#
#ASM 71
#BIT 73
#BUILD 73
#BYTE....74
#CASE 75
#DEFINE....76
#DEFINEDINC 76
#DEVICE....77
#ELIF 79, 84
#ELSE....79, 84
#ENDASM 71
#ENDIF 79, 84
#ERROR 80
#EXPORT 80
#FILL_ROM 82
#FUSES 82
#HEXCOMMENT 83
#ID 84
#ID_Checksum....84
#ID_Filename....84
#ID_number 84
#ID_number,_number,_number 84
#ID_number_16 84
#IF....79, 84
#IF expr....79, 84
#IFDEF....85
#IFNDEF 85
#IGNORE_WARNINGS 86
#IMPORT 86
#INCLUDE 87
#INLINE 87
#INT_AD 88
#INT_ADOF 88
#INT_BUSCOL....88
#INT_BUSCOL2....88
#INT_BUTTON....88
#INT_CANERR 88
#INT_CANIRX....88
#INT_CANRX0....88
#INT_CANRX1....88
#INT_CANTX0 88
#INT_CANTX1 88
#INT_CANTX2 88
#INT_CANWAKE 88
#INT_CCP1....88
#INT_CCP2....88
#INT_CCP3....88
#INT_CCP4....88
#INT_CCP5....88
#INT_COMP....88
#INT_COMP0....88
#INT_COMP1....88
#INT_COMP2....88
#INT_CR 88
#INT_DEFAULT 91
#INT_EEPROM....88
#INT_ETH 88
#INT_EXT 88
#INT_EXT1 88
#INT_EXT2 88
#INT_EXT3 88
#INT_GLOBAL 91
#INT_I2C....88
#INT_IC1....88
#INT_IC2QEI....88
#INT_IC3DR....88
#INT_INT_OSC_FAIL 88
#INT_LCD 88
#INT_LOWVOLT....88
#INT_LVD 88
#INT_OSCF 88
#INT_PMP 88
#INT_PSP 88
#INT_PWMTB 88
#INT_RA 88
#INT_RB 88
#INT_RC 88
#INT_RDA....88
#INT_RDA0....88
#INT_RDA1....88
#INT_RDA2....88
#INT_RTCC 88
#INT_SPP 88
#INT_SSP 88
#INT_SSP2 88
#INT_TBE0 88
#INT_TBE1 88
#INT_TBE2 88
#INT_TIMER0 88
#INT_TIMER1 88
#INT_TIMER2 88
#INT_TIMER3 88
#INT_TIMER4 88
#INT_TIMER5 88
#INT_ULPWU 88
#INT_USB....88
#INT_xxxx 88
#LIST 92
#LOCATE....93
#MODULE....93
#NOLIST 94
#OCS 94
#OPT....94
#ORG....95
#PIN_SELECT 96
#PRAGMA 98
#PRIORITY 99
#PROFILE....99
#RESERVE 100
#ROM....101
#SEPARATE 101
#SERIALIZE....102
#STREAM I/O 67

#TASK....103
#TYPE....104
#UNDEF....105
#USE DELAY....107
#USE DYNAMIC_MEMORY....108
#USE FAST_IO....108
#USE FIXED_IO....109
#USE I2C....109
#USE PROFILE....110
#USE PWM....111
#USE RS232....112, 301
#USE RTOS....114
#USE SPI....115
#USE STANDARD_IO....116
#USE TIMER....117
#USE_TOUCHPAD....118
#WARNING....119
#WORD....119
#ZERO_RAM....120
.
.LST file....335
;
; 19
_
__ DATE__ 75
__ PCH __ 98
__ TIME __ 104
__ADDRESS__....70
__DATE__ 75
__DEVICE__....79
__FILE__ 81
__FILENAME__....82
__LINE__....91
__PCB__ 97
__PCM__ 98
_attribute_x....70
_LOCATE....93
A
abs 126
acos 126
adc 37, 233, 250
adc_done 127
Addressmod....29
Analog_Comparator....38
asin 126
ASM 71
assert 128
at_clear_interrupts()131, 132, 133, 134, 135, 136, 137, 138, 139, 251
at_disable_interrupts()131, 132, 133, 134, 135, 136, 137, 138, 139, 251
at_enable_interrupts()131, 132, 133, 134, 135, 136, 137, 138, 139, 251
at_get_capture()131, 132, 133, 134, 135, 136, 137, 138, 139, 251
at_get_missing_pulse_delay()131, 132, 133, 134, 135, 136, 137, 138, 139, 251
at_get_period()131, 132, 133, 134, 135, 136, 137, 138, 139, 251
at_get_phase_counter()131, 132, 133, 134, 135, 136, 137, 138, 139, 251
at_get_resolution()131, 132, 133, 134, 135, 136, 137, 138, 139, 251
at_get_set_point()131, 132, 133, 134, 135, 136, 137, 138, 139, 251
at_get_set_point_error()131, 132, 133, 134, 135, 136, 137, 138, 139, 251
at_get_status()131, 132, 133, 134, 135, 136, 137, 138, 139, 251
at_interrupt_active()131, 132, 133, 134, 135, 136, 137, 138, 139, 251
at_set_compare_time()131, 132, 133, 134, 135, 136, 137, 138, 139, 251
at_set_missing_pulse_delay()131, 132, 133, 134, 135, 136, 137, 138, 139, 251
at_set_resolution()131, 132, 133, 134, 135, 136, 137, 138, 139, 251
at_set_set_point()131, 132, 133, 134, 135, 136, 137, 138, 139, 251
at_setup_cc()131, 132, 133, 134, 135, 136, 137, 138, 139, 251
atan 126
atan2 126
atoe 128
atof 129
atoi 130
atoi32 130
atol 130
B
Basic_types....25
#char 25
#double....25
#float 25
#Int....25
#int1 25
#int16 25
#int32 25
#int8 25
#long 25
#short 25
_fixed(n) 25
Auto 25
const....25
double....25
extern 25
register....25
signed 25
static....25
unsigned 25
void 25
volatile....25
BIT 73
bit_clear 140
bit_set 141
bit_test 141
break 18
brownout_enable....142
bsearch 142
BUILD 73
BUILT-IN-FUNCTIONS 121
BYTE....74
C
Calling_the_compiler....3
calloc....143
CAN_Bus 39
CASE 17
CCP1 41
ceil 143
char_put 310
clear_interrupt 145
Code_Profile 41
cog_restart()....146, 236, 237, 255
cog_status() 146, 236, 237, 255
Command_Line_Compiler 3
Comment 11
Configuration_Memory....42
constant_data_table....324
Continue....19
conversions 323
cos 126
cosh 126

crc_calc() 147, 148, 256
crc_calc16() 147, 148
crc_calc8() 147, 148, 256
crc_init 148
cwg_restart(_) 148
cwg_status(_) 148
D
DAC 43
dac_write 149
Data Signal Modulator 45
Data_Definition 25
Data_EEPROM 44
data_table 324
DATE 75
default 17
Default_Parameters 34
DEFINE 76
DEFINEDINC 76
DELAY 107
delay_cycles 149
delay_ms 150
delay_us 150
DEVICE 77
Directories 2
disable_interrupts 151
div 152
E
EEPROM 153, 154
ELIF 85
ELSE 15
enable_interrupts 152
ENDASM 71
ENDIF 85
erase_program_eeprom 154
errno.h 309
ERROR 80
ex_str.c 298
Example_Programs 339
exp 154
EXPORT 80
expr 19
ext_int_edge 155
External_Memory 45
F
fabs 155
FAST_IO 108
fgetc 156
fgets 156, 173
FILE 81
File_Formats 3
FILENAME 82
FILL_ROM 82
FIXED_IO 109
float.h 309
floating_point 334
floor 157
fmod 157
for 17
format_of_floating_point_numbers 334
fprintf 158, 204
fputc 159, 207
fputs 160, 208
free 161
frexp 161
Function_Definition 33
FUSES 82
G
get_capture() 164
get_hspwm_capture() 165, 238, 239, 240, 259, 260, 261, 263
get_rtcc 168
get_ticks 167
get_timer 168
get_timer0 168
get_timer1 168
get_timer2 168
get_timer3 168
get_timer4 168
get_timer5 168
get_timer6 168
get_timer7 168
get_timer8 168
get_timerA 167
get_timerB 167
get_timerx 168
get_tris_a 169
get_tris_b 169
get_tris_c 169
get_tris_d 169
get_tris_e 169
get_tris_f 169
get_tris_g 169
get_tris_h 169
get_tris_j 169
get_tris_k 169
get_tris_x 169
getc 156, 301
getc_timeout 326
getch 156
getchar 156
getenv 169
gets 156, 173
GLOBAL 91
goto 18
goto_address 173
H
HEXCOMMENT 83
How do I wait only a specified time for a button press? 327
How_are_type_conversions_handled? 323
How_can_a_constant_data_table_be_placed_in_ROM? 324
How_can_I_use_two_or_more_RS-232_ports_on_one_PIC? 324
How_do_I_directly_read/write_to_internal_registers? 325
How_do_I_do_a_printf_to_a_string? 326
How_do_I_get_getc_to_timeout_after_a_specified_time? 326
How_does_one_map_a_variable_to_an_I/O_port? 327
How_does_the_PIC_connect_to_a_PC? 329
How_does_the_PIC_connect_to_an_I2C_device? 330

How_much_time_do_math_operations_take?....330
I
I/O_Port....327
I2C....37
i2c_init()....174
i2c_isr_state....175
i2c_poll....175
i2c_read....176
i2c_slaveaddr....177
i2c_speed(_)....177
i2c_start....178
i2c_stop....178
i2c_write....179
ID....84
IF 15
IFDEF....85
IFNDEF....85
IGNORE_WARNINGS....86
IMPORT....86
INCLUDE....87
INLINE....87
input....179
input_a....181
input_b....181
input_c....181
input_change_x( )....180
input_d....181
input_e....181
input_f....181
input_g....181
input_h....181
input_j....181
input_k....181
input_state....181
input_x....181
Installation....1
Instead_of_A0_the_compiler_is_using_register_20. Why?....331
INT_DEFAULT....91
int_max....310
int_min....310
INT_xxx....88
Internal_LCD....47
Internal_LCD_Overview....187
Internal_Oscillator....47
internal_registers....325
interrupt_active....182
interrupts....48
Invoking_the_Command_Line_Compiler....3
isalnum_char....182
isalpha....182
isamong....183
iscntrl....182
isdigit....182
isgraph....182
islower....182
isprint....182
ispunct....182
isspace....182
isupper....182
isxdigit....182
itoa....184
J
jump_to_isr....184
K
kbhit....185
L
label....18
label_address....185
labs....186
lcd_contrast....186
lcd_load....187
lcd_symbol....187
ldexp....188
ldiv....152
License_Agreement....359
limits.h....310
LINE....91, 92
LIST....92
locale.h....310
LOCATE....93
log....188
log10....189
long_max....310
long_min....310
longjmp....190
Low_Voltage_Detect....49
M
make16....191
make32....191
make8....190
malloc....192
math_operations....330
mb_len_max....310
memchr....293
memcmp....293
memcpy....192
memmove....192
memset....193
Microchips_ICD_debugger_using_MPLAB....326
modf....193
MODULE....93
mul....194
Multiple Compilation Units....13
Multiple_Project_Files....12
multiple_RS-232_ports....324
N
nargs....194
NOLIST....94
NOP....326
null....311
O
Obsolete....336
OCS....94
offsetof....195
offsetofbit....195
Operator_Precedence....23
Operators....22
OPT....94
ORG....95
output_A....196
output_b....196

output_bit 197
output_c 196
output_d 196
output_drive 197
output_e 196
output_f 196
output_float 198
output_g 196
output_h 196
output_high 198
output_i 196
output_j 196
output_k 196
output_low 199
output_toggle 199
output_x 196
Overloaded_Functions 33
Overview 1, 5
P
PCB 97
PCB_PCM_and_PCH_Overview 1
PCH 98
PCM 98
perror 200
PIC_to_I2C 330
PIC_to_PC 329
pid_busy() 201, 202
pid_get_result() 201, 202
pid_read() 201, 202
pid_write() 201, 202
PIN_SELECT 96
port_x_pullups 203
pow 204
Power_PWM 51
PRAGMA 98
Preprocessor 69
printf 158, 204, 301
PRIORITY 99
Profileout() 206
PSP 53
psp_input_full 206
psp_output_full 206
psp_overflow 206
ptrdiff_t 311
putc 159, 207, 301
putc_send 208, 301
putchar 159, 207
puts 160, 208
pwm_off 209
pwm_on 209
pwm_set_duty 210
pwm_set_duty_percent 210
pwm_set_frequency 211
Q
qei_get_count 211
qei_set_count 212
qei_status 212
qsort 212
R
rand 213
rcv_buffer_bytes 214, 301
rcv_buffer_full 214, 301
read/write 325
read_adc 214, 233, 250
read_bank 215
read_calibration 216
read_configuration_memory 216
read_eeprom 217
read_program_eeprom 220
read_program_memory 218
realloc 221
Reference_Parameters 34
RESERVE 100
reset_cpu 222
restart_cause 222
restart_wdt 223
Return 17
ROM 101
rotate_left 224
rotate_right 224
RS232 ....54, 112
RS-232 54
RS-232 336
rtc_alarm_read 225
rtc_alarm_write 225
rtc_read 226
rtc_write 226
RTOS 56, 114
rtos_await 227
rtos_disable 227
rtos_enable 228
rtos_msg_poll 228
rtos_msg_read 228
rtos_msg_send 229
rtos_overrun 229
rtos_run 230
rtos_signal 230
rtos_stats 231
rtos_terminate 231
rtos_wait 232
rtos_yield 232
S
SCANF() 162, 234
schar_max 310
schar_min 310
Semi_Colon 19
SEPARATE 101
SERIALIZE 102
set_adc_channel 233, 250
set_analog_pins() 233, 250
set_cog_blanking() 146, 236, 237, 255
set_cog_dead_band() 146, 236, 237, 255
set_cog_phase() 146, 236, 237, 255
set_hspwm_duty()165, 238, 239, 240, 259, 260, 261, 263
set_hspwm_event()165, 238, 239, 240, 259, 260, 261, 263
set_hspwm_override()165, 238, 239, 240, 259, 260, 261, 263
set_hspwm_phase()165, 238, 239, 240, 259, 260, 261, 263
set_power_pwm_override 241
set_power_pwm0_duty 242
set_power_pwm2_duty 242
set_power_pwm4_duty 242
set_power_pwm6_duty 242
set_power_pwmx_duty 242
set_pullup() 242

set_pwm1_duty 243
set_pwm2_duty 243
set_pwm3_duty 243
set_pwm4_duty 243
set_pwm5_duty 243
set_rtcc 244, 247
set_ticks 244
set_timer0 ....244, 247
set_timer1 ....244, 247
set_timer2 ....244, 247
set_timer3 ....244, 247
set_timer4 ....244, 247
set_timer5 ....244, 247
set_timerA 246
set_timerB 246
set_tris_a 248
set_tris_b 248
set_tris_c 248
set_tris_d 248
set_tris_e 248
set_tris_f 248
set_tris_g 248
set_tris_h 248
set_tris_j 248
set_tris_k 248
set_tris_x 248
set_uart_speed 248
setjmp 310
setjmp.h 310
setup 1
setup_adc 233, 250
setup_adc_mode 250
setup_adc_ports 233, 250
setup_adc_reference() 250
setup_at()131, 132, 133, 134, 135, 136, 137, 138, 139, 251
setup_ccp1 252
setup_ccp2 252
setup_ccp3 252
setup_ccp4 252
setup_ccp5 252
setup_ccp6 252
setup_cog() 146, 236, 237, 255
setup_comparator 254
setup_counters 254
setup_crc 147, 148, 256
setup_dac 257
setup_external_memory 258
setup_hspwm()165, 238, 239, 240, 259, 260, 261, 263
setup_hspwm_blanking()165, 238, 239, 240, 259, 260, 261, 263
setup_hspwm_chop_clock()165, 238, 239, 240, 259, 260, 261, 263
setup_hspwm_secondary()165, 238, 239, 240, 259, 260, 261, 263
setup_hspwm_trigger()165, 238, 239, 240, 259, 260, 261, 263
setup_hspwm_unit_chop_clock()165, 238, 239, 240, 259, 260, 261, 263
setup_lcd 263
setup_low_volt_detect 264
setup_nco() 265
setup_opamp1 ....265, 266
setup_oscillator 266
setup_pid() 201, 202, 267
setup_power_pwm 268
setup_power_pwm_pins 269
setup_psp 270
setup_qei 271
setup_rtc 272
setup_rtc_alarm 272
setup_smtx 273
setup_spi 274
setup_timer_0 275
setup_timer_1 276
setup_timer_2 276
setup_timer_3 277
setup_timer_4 278
setup_timer_5 278
setup_timer_A 274
setup_timer_B 275
setup_uart 279, 301
setup_vref 279
setup_wdt 280
setup_zcd() 280, 308
shift_left 281
shift_right 281
shrt_max 310
shrt_min 310
sin 126
sinh 126
size_t 311
sizeof 22
sleep 282
sleep_ulpwu 282
spi_data_is_in 287
spi_data_is_in2 287
spi_init() 287
spi_read 288
spi_read2 288
spi_write 290
spi_write2 290
spi_xfer 291
sprintf 292
sqrt 292
srand 293
STANDARD_IO 116
standard_string_functions 293
Statements 15
stddef.h 311
stdio.h 311
stdlib.h 311
stmt 19
strcat 293
strchr 293
strcmp 293
strcoll 293
strcopy 294
strcpy 294
strerror 293
string 326
strlen 293
strlwr 293
strncat 293
strncmp 293
strncpy 293
strpbrk 293
strrchr 293
strspn 293
strstr 293

strtod 293, 295
strtok 295
strtol 296
strtoul 297
swap....298
switch 17
T
tan 126
tanh 126
TASK....103
Technical_Support 2
TIME 104
timer 168
Timer0....58
Timer1....59
Timer2....60
Timer3....60
Timer4....61
Timer5....61
TimerA 61
TimerB 62
tolower 298
touchpad_getc....299
touchpad_hit 299
touchpad_state....300
toupper....298
Trigraph_Sequences....12
TRIS....336
tx_buffer_available()....301
TYPE....104
type_conversions 323
typemod 29
U
uchar_max 310
uchar_min 310
uint_max 310
ulong_max 310
UNDEF....105
USB....63
USE _RS232....112
USE _RTOS....114
USE CAPTURE....106
USE DYNAMIC_MEMORY 108
USE SPI....115
USE_DELAY....107
USE_FAST_IO....108
USE_FIXED_IO 109
USE_I2C 109
USE_STANDARD_IO 116
USE_TOUCHPAD....118
ushrt_max 310
V
va_arg 302
va_end 302
va_start 303
Variable_Parameters 34
W
WARNING....119
Watch_Dog_Timer 66
wchar_t 311
WDT....66
WDT_or_Watch_Dog_Timer....66
What_can_be_done_about_an_OUT_O
F_RAM_error?....331
What_is_the_format_of_floating_point_n
umbers? 334
while....16
Why_does_the_.LST_file_look_out_of_
order? 335
Why_does_the_compiler_use_the_obso
lete_TRIS?....336
Why_is_the_RS-
232_not_working_right? 336
WORD....119
write_bank....304
write_configuration_memory 304
write_eeprom 305
write_external_memory....305
write_program_eeprom 306
write_program_memory 307
Z
zcd_status() 280, 308
ZERO_RAM 120

OCEAN CHIPS
Океан Электроники
Поставка электронных компонентов

Компания «Океан Электроники» предлагает заключение долгосрочных отношений при поставках импортных электронных компонентов на взаимовыгодных условиях!

Наши преимущества:

- Поставка оригинальных импортных электронных компонентов напрямую с производств Америки, Европы и Азии, а так же с крупнейших складов мира;
- Широкая линейка поставок активных и пассивных импортных электронных компонентов (более 30 млн. наименований);
- Поставка сложных, дефицитных, либо снятых с производства позиций;
- Оперативные сроки поставки под заказ (от 5 рабочих дней);
- Экспресс доставка в любую точку России;
- Помощь Конструкторского Отдела и консультации квалифицированных инженеров;
- Техническая поддержка проекта, помощь в подборе аналогов, поставка прототипов;
- Поставка электронных компонентов под контролем ВП;
- Система менеджмента качества сертифицирована по Международному стандарту ISO 9001;
- При необходимости вся продукция военного и аэрокосмического назначения проходит испытания и сертификацию в лаборатории (по согласованию с заказчиком);
- Поставка специализированных компонентов военного и аэрокосмического уровня качества (Xilinx, Altera, Analog Devices, Intersil, Interpoint, Microsemi, Actel, Aeroflex, Peregrine, VPT, Syfer, Eurofarad, Texas Instruments, MS Kennedy, Miteq, Cobham, E2V, MA-COM, Hittite, Mini-Circuits, General Dynamics и др.);

Компания «Океан Электроники» является официальным дистрибьютором и эксклюзивным представителем в России одного из крупнейших производителей разъемов военного и аэрокосмического назначения **«JONHON»**, а так же официальным дистрибьютором и эксклюзивным представителем в России производителя высокотехнологичных и надежных решений для передачи СВЧ сигналов **«FORSTAR»**.

AVIC JONHON

«JONHON» (основан в 1970 г.)

Разъемы специального, военного и аэрокосмического назначения:

(Применяются в военной, авиационной, аэрокосмической, морской, железнодорожной, горно- и нефтедобывающей отраслях промышленности)

«FORSTAR» (основан в 1998 г.)

ВЧ соединители, коаксиальные кабели, кабельные сборки и микроволновые компоненты:

(Применяются в телекоммуникациях гражданского и специального назначения, в средствах связи, РЛС, а так же военной, авиационной и аэрокосмической отраслях промышленности).

FORSTAR®

Телефон: 8 (812) 309-75-97 (многоканальный)
Факс: 8 (812) 320-03-32
Электронная почта: ocean@oceanchips.ru
Web: http://oceanchips.ru/
Адрес: 198099, г. Санкт-Петербург, ул. Калинина, д. 2, корп. 4, лит. А