VE High Temperature 150°C

Overview

KEMET's VE series of high temperature, low voltage varistors are designed to protect sensitive electronic devices against high voltage surges in the low voltage region. In addition to superior operating performance at rated 150°C (AEC–Q200 compliance) they offer excellent transient energy absorption due to improved energy volume distribution and power dissipation.

Applications

Typical applications include transient over-voltage protection in automotive assembly motors and controllers as well as surge protection of non-automotive electronic products exposed to over-heating, i.e., consumer, telecommunication or industrial.

Load dump and jump start protection of 12 to 24 V supply systems. Protection of integrated circuits and other components at the circuit board level including the suppression of inductive switching or other transient events such as surge voltage. ESD protection for components sensitive to IEC 1000–4–2, MILSTD 883C Method 3015.7 and other industry spec. Replacement of larger surface mount TVS Zeners in many applications. Designed to achieve electromagnetic compliance of end products and provide on-board transient voltage protection of ICs and transistors.

Benefits

- AEC-Q200 qualified Grade 1
- Surface mount form factor
- Operating ambient temperature of −55°C to +150°C
- Superior operating performance rated at 150°C (AEC-Q200 compliance)
- Operating voltage range of 11 – 170 V
- AC voltage range (V_{rms}) of 8 – 130 V
- High resistance to cyclic temperature stress
- Low leakage currents after 1,000 hours rated at 150°C
- High energy absorption capability
- Available case sizes: 0603, 0805, 1206, 1210, 1812, 2220
- Short response time
- Broad range of current and energy handling capabilities
- Low clamping voltage – Uc
- Non-sensitive to mildly activated fluxes
- Barrier type end terminations solderable with Pb-free solders according to JEDEC J–STD–020C and IEC 60068–2–58
- RoHS 2 2011/65/EC, REACH compliant

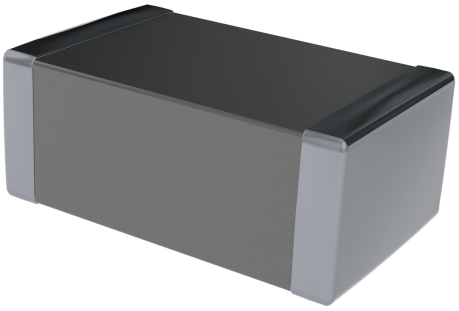

Click image above for interactive 3D content

Open PDF in Adobe Reader for full functionality

© KEMET Electronics Corporation • KEMET Tower • One East Broward Boulevard
Fort Lauderdale, FL 33301 USA • 954-766-2800 • www.kemet.com

Ordering Information

VE	0603	M	300	R	002
Series	Chip Size Code	Tolerances	Rated Peak Single Pulse Transient Current (A)	Packaging/ Termination	Maximum Continuous Working Voltage (Vrms AC)
Varistor SMD High Temperature 150°C Low Voltage Multilayer Chip	0603 = 0603 0805 = 0805 1206 = 1206 1210 = 1210 1812 = 1812 2220 = 2220	K = ±10% L = ±15% M = ±20%	300 = 30 101 = 100 121 = 120 151 = 150 201 = 200 251 = 250 301 = 300 401 = 400 501 = 500 601 = 600 801 = 800 102 = 1,000 122 = 1,200 (First two digits represent significant figures. Third digit specifies number of zeros.)	R = Reel 180 mm/Ni Sn Barrier Terminations	008 = 8 011 = 11 014 = 14 017 = 17 020 = 20 025 = 25 030 = 30 035 = 35 040 = 40 050 = 50 060 = 60 075 = 75 095 = 95 115 = 115 130 = 130

Dimensions – Millimeters

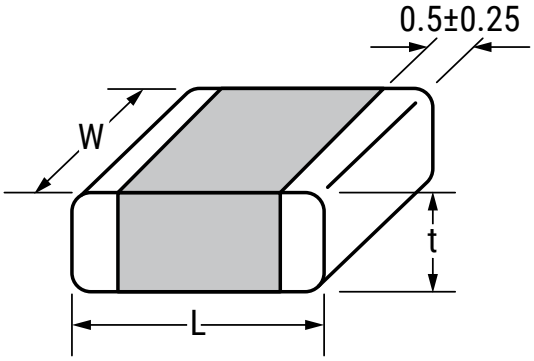

Size Code	L	W	t_{max}
0603	1.6±0.20	0.80±0.10	0.95
0805	2.0±0.25	1.25±0.20	0.80
1206	3.2±0.30	1.60±0.20	0.85
1210	3.2±0.30	2.50±0.25	0.85
1812	4.7±0.40	3.20±0.30	1.25
2220	5.7±0.50	5.00±0.40	1.25

Environmental Compliance

RoHS 2 2011/65/EC, REACH

Performance Characteristics

Continuous	Units	Value
Steady State Applied Voltage		
DC Voltage Range (V_{dc})	V	11 – 170
AC Voltage Range (V_{rms})	V	8 – 130
Transient		
Peak Single Pulse Surge Current, 8/20 µs Waveform (I_{max})	A	30 – 1,200
Single Pulse Surge Energy, 10/1,000 µs Waveform (W_{max})	J	0.1 – 12.2
Operating Ambient Temperature	°C	−55 to +150
Storage Temperature Range (mounted components)	°C	−55 to +150
Threshold Voltage Temperature Coefficient	%/°C	< +0.05
Response Time	ns	< 2
Climatic Category		55/150/56

Qualifications

Reliability Parameter	Test	Tested According to	Condition to be Satisfied after Testing
AC/DC Bias Reliability	AC/DC Life Test	CECC 42200, Test 4.20 or IEC 1051–1, Test 4.20. AEC–Q200 Test 8 – 1,000 hours at UCT	$\lvert\delta_{Vn}$ (1 mA)$\rvert$ < 10%
Pulse Current Capability	I_{max} 8/20 µs	CECC 42200, Test C 2.1 or IEC 1051–1, Test 4.5. 10 pulses in the same direction at 2 pulses per minute at maximum peak current for 10 pulses	$\lvert\delta_{Vn}$ (1 mA)$\rvert$ < 10% no visible damage
Pulse Energy Capability	W_{max} 10/1,000 µs	CECC 42200, Test C 2.1 or IEC 1051–1, Test 4.5. 10 pulses in the same direction at 1 pulses every 2 minutes at maximum peak current for 10 pulses	$\lvert\delta_{Vn}$ (1 mA)$\rvert$ < 10% no visible damage
WLD Capability	WLD x 10	ISO 7637, Test pulse 5, 10 pulses at rate 1 per minute	$\lvert\delta_{Vn}$ (1 mA)$\rvert$ < 15% no visible damage
V_{jump} Capability	V_{jump} 5 minutes	Increase of supply voltage to V ≥ V_{jump} for 1 minute	$\lvert\delta_{Vn}$ (1 mA)$\rvert$ < 15% no visible damage

Qualifications cont'd

Reliability Parameter	Test	Tested According to	Condition to be Satisfied after Testing
Environmental and Storage Reliability	Climatic Sequence	CECC 42200, Test 4.16 or IEC 1051–1, Test 4.17. a) Dry heat, 16 hours, UCT, Test Ba, IEC 68–2–2 b) Damp heat, cyclic, the first cycle: 55°C, 93% RH, 24 hours, Test Db 68–2–4 c) Cold, LCT, 2 hours Test Aa IEC 68–2–1 d) Damp heat cyclic, remaining 5 cycles: 55°C, 93% RH, 24 hour/cycle, Test Bd, IEC 68–2–30	$\lvert\delta_{Vn}$ (1 mA)$\rvert$ < 10%
	Thermal Shock	CECC 42200, Test 4.12, Test Na, IEC 68–2–14, AEC–Q200 Test 16, 5 cycles UCT/LCT, 30 minutes	$\lvert\delta_{Vn}$ (1 mA)$\rvert$ < 10% no visible damage
	Steady State Damp Heat	CECC 42200, Test 4.17, Test Ca, IEC 68–2–3, AEC–Q200 Test 6, 56 days, 40°C, 93% RH. AEC–Q200 Test 7: Bias, RH, T all at 85.	$\lvert\delta_{Vn}$ (1 mA)$\rvert$ < 10%
	Storage Test	IEC 68–2–2, Test Ba, AEC–Q200 Test 3, 1,000 hours at maximum storage temperature	$\lvert\delta_{Vn}$ (1 mA)$\rvert$ < 5%
Mechanical Reliability	Solderability	CECC 42200, Test 4.10.1, Test Ta IEC 68–2–20 solder bath and reflow method	Solderable at shipment and after 1 year of storage, criteria > 95% must be covered by solder for reflow meniscus
	Resistance to Soldering Heat	CECC 42200, Test 4.10.2, Test Tb, IEC 68–2–20 solder bath and reflow method	$\lvert\delta_{Vn}$ (1 mA)$\rvert$ < 5%
	Terminal Strength	JIS–C–6429, App. 1, 18 N for 60 seconds – same for AEC–Q200 Test 22	no visual damage
	Board Flex	JIS–C–6429, App. 2, 2 mm minimum AEC–Q200 test 21 – Board flex: 2 mm flex minimum	$\lvert\delta_{Vn}$ (1 mA)$\rvert$ < 2% no visible damage
	Vibration	CECC 42200, Test 4.15, Test Fc, IEC 68–2–6, AEC–Q200 Test 14. Frequency range 10 – 55 Hz (AEC: 10 – 2,000 Hz) Amplitude 0.75 m/s^2 or 98 m/s^2 (AEC: 5 G for 20 minutes) Total duration 6 hours (3 x 2 hours) (AEC: 12 cycles each of 3 directions) Waveshape – half sine	$\lvert\delta_{Vn}$ (1 mA)$\rvert$ < 10% no visible damage
	Mechanical Shock	CECC 42200, Test 4.14, Test Ea, IEC 68–2–27, AEC–Q200 Test 13. Acceleration = 490 m/s^2 (AEC: MIL-STD–202–Method 213), Pulse duration = 11 ms, Waveshape – half sine; Number of shocks = 3 x 6	$\lvert\delta_{Vn}$ (1 mA)$\rvert$ < 10% no visible damage
Electrical Transient Conduction	ISO–7637–1 Pulses	AEC–Q200 Test 30: Test pulses 1 to 3. Also other pulses – freestyle.	$\lvert\delta_{Vn}$ (1 mA)$\rvert$ < 10% no visible damage

Reliability

In general, reliability is the ability of a component to perform and maintain its functions in routine circumstances, as well as hostile or unexpected circumstances. The mean life of series components is a function of:

- Factor of Applied Voltage
- Ambient temperature

Mean life is closely related to Failure rate (formula).

Mean life (ML) is the arithmetic mean (average) time to failure of a component.

Failure rate is the frequency with which an engineered system or component fails, expressed for example in failures per hour. Failure rate is usually time dependent, an intuitive corollary is that the rate changes over time versus the expected life cycle of a system.

Failure rate formula – calculation

$$\Lambda = \frac{10^9}{ML[h]} \quad [fit]$$

FAV – Factor of Applied Voltage

$$\Lambda = \frac{Vapl}{V_{max}}$$

Vapl = applied voltage

V_{max} = maximum operating voltage

Mean Life on Arrhenius model

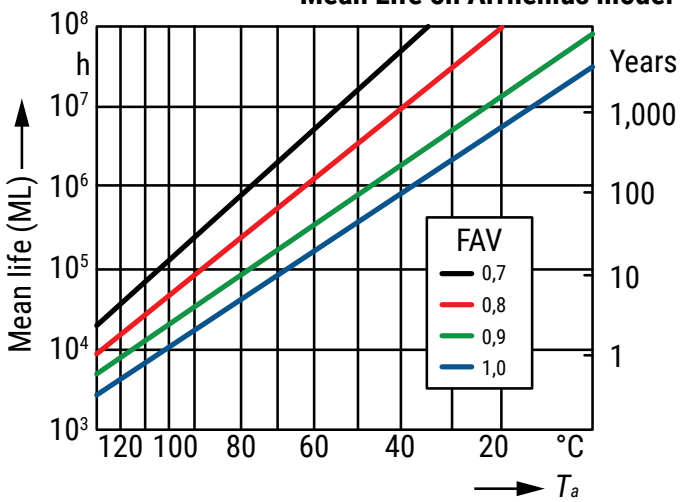

Table 1 – Ratings & Part Number Reference

KEMET Part Number	L (mm)	W (mm)	t_{max} (mm)	V_{rms}	VDC	V_n 1 mA	V_c	I_c 8/20 µs (A)	W_{max} 10/1000 µs (J)	P_{max} (W)	I_{max} 8/20 µs (A)	C_{typ} at 1 kHz (pF)	L_{typ} 100mA/ns (nH)
VE0603L300R008	1.6±0.20	0.80±0.10	0.95	8	11	15	27	1	0.1	0.003	30	240	1.0
VE0805L121R008	2.0±0.25	1.25±0.20	0.80	8	11	15	27	1	0.2	0.005	120	475	1.5
VE1206L201R008	3.2±0.30	1.60±0.20	0.85	8	11	15	27	1	0.6	0.008	200	2,000	1.8
VE1210L401R008	3.2±0.30	2.50±0.25	0.85	8	11	15	27	3	1.1	0.010	400	3,400	1.8
VE1812L501R008	4.7±0.40	3.20±0.30	1.25	8	11	15	27	5	1.9	0.015	500	6,300	2.5
VE2220L122R008	5.7±0.50	5.00±0.40	1.25	8	11	15	27	10	4.3	0.020	1,200	15,000	3.0
VE0603K300R011	1.6±0.20	0.80±0.10	0.95	11	14	18	35	1	0.2	0.003	30	210	1.0
VE0805K121R011	2.0±0.25	1.25±0.20	0.80	11	14	18	35	1	0.3	0.005	120	400	1.5
VE1206K201R011	3.2±0.30	1.60±0.20	0.85	11	14	18	35	1	0.6	0.008	200	1,300	1.8
VE1210K401R011	3.2±0.30	2.50±0.25	0.85	11	14	18	35	3	1.3	0.010	400	2,600	1.8
VE1812K801R011	4.7±0.40	3.20±0.30	1.25	11	14	18	35	5	2.0	0.015	800	5,100	2.5
VE2220K122R011	5.7±0.50	5.00±0.40	1.25	11	14	18	35	10	5.5	0.020	1,200	12,000	3.0
VE0603K300R014	1.6±0.20	0.80±0.10	0.95	14	18	22	40	1	0.3	0.003	30	195	1.0
VE0805K121R014	2.0±0.25	1.25±0.20	0.80	14	18	22	40	1	0.4	0.005	120	355	1.5
VE1206K201R014	3.2±0.30	1.60±0.20	0.85	14	18	22	40	1	0.6	0.008	200	950	1.8
VE1210K401R014	3.2±0.30	2.50±0.25	0.85	14	18	22	40	3	1.6	0.010	400	2,000	1.8
VE1812K801R014	4.7±0.40	3.20±0.30	1.25	14	18	22	40	5	2.4	0.015	800	4,200	2.5
VE2220K122R014	5.7±0.50	5.00±0.40	1.25	14	18	22	40	10	6.0	0.020	1,200	9,400	3.0
VE0603K300R017	1.6±0.20	0.80±0.10	0.95	17	22	27	46	1	0.3	0.003	30	185	1.0
VE0805K121R017	2.0±0.25	1.25±0.20	1.05	17	22	27	46	1	0.4	0.005	120	315	1.5
VE1206K201R017	3.2±0.30	1.60±0.20	1.25	17	22	27	46	1	0.7	0.008	200	740	1.8
VE1210K401R017	3.2±0.30	2.50±0.25	1.35	17	22	27	46	3	1.8	0.010	400	1,700	1.8
VE1812K801R017	4.7±0.40	3.20±0.30	1.25	17	22	27	46	5	2.8	0.015	800	3,500	2.5
VE2220K122R017	5.7±0.50	5.00±0.40	1.25	17	22	27	46	10	7.5	0.020	1,200	7,700	3.0
VE0603K300R020	1.6±0.20	0.80±0.10	0.95	20	26	33	56	1	0.3	0.003	30	175	1.0
VE0805K121R020	2.0±0.25	1.25±0.20	1.05	20	26	33	56	1	0.4	0.005	120	290	1.5
VE1206K201R020	3.2±0.30	1.60±0.20	1.25	20	26	33	56	1	0.8	0.008	200	620	1.8
VE1210K401R020	3.2±0.30	2.50±0.25	1.35	20	26	33	56	3	2.0	0.010	400	1,400	1.8
VE1812K801R020	4.7±0.40	3.20±0.30	1.55	20	26	33	56	5	3.0	0.015	800	3,000	2.5
VE2220K122R020	5.7±0.50	5.00±0.40	1.45	20	26	33	56	10	8.0	0.020	1,200	6,500	3.0
VE0603K300R025	1.6±0.20	0.80±0.10	0.95	25	31	39	67	1	0.1	0.003	30	165	1.0
VE0805K121R025	2.0±0.25	1.25±0.20	1.05	25	31	39	67	1	0.2	0.005	120	260	1.5
VE1206K201R025	3.2±0.30	1.60±0.20	1.25	25	31	39	67	1	1.0	0.008	200	510	1.8
VE1210K401R025	3.2±0.30	2.50±0.25	1.45	25	31	39	67	3	1.8	0.010	400	1,060	1.8
VE1812K801R025	4.7±0.40	3.20±0.30	1.55	25	31	39	67	5	3.9	0.015	800	2,300	2.5
VE2220K122R025	5.7±0.50	5.00±0.40	1.45	25	31	39	67	10	9.5	0.020	1,200	5,000	3.0
VE0603K300R030	1.6±0.20	0.80±0.10	0.95	30	38	47	79	1	0.1	0.003	30	160	1.0
VE0805K121R030	2.0±0.25	1.25±0.20	1.05	30	38	47	79	1	0.2	0.005	120	230	1.5
VE1206K201R030	3.2±0.30	1.60±0.20	1.25	30	38	47	79	1	1.2	0.008	200	450	1.8
VE1210K301R030	3.2±0.30	2.50±0.25	1.45	30	38	47	79	3	2.1	0.010	300	850	1.8
VE1812K801R030	4.7±0.40	3.20±0.30	1.55	30	38	47	79	5	4.4	0.015	800	1,800	2.5
VE2220K122R030	5.7±0.50	5.00±0.40	1.45	30	38	47	79	10	12.2	0.020	1,200	4,000	3.0
VE1206K121R035	3.2±0.30	1.60±0.20	1.25	35	45	56	92	1	0.6	0.008	120	400	1.8
VE1210K251R035	3.2±0.30	2.50±0.25	1.45	35	45	56	92	3	2.2	0.010	250	670	1.8
VE1812K601R035	4.7±0.40	3.20±0.30	1.55	35	45	56	92	5	4.2	0.015	600	1,340	2.5
VE2220K102R035	5.7±0.50	5.00±0.40	1.45	35	45	56	92	10	7.6	0.020	1,000	3,000	3.0
VE1206K121R040	3.2±0.30	1.60±0.20	1.25	40	56	68	112	1	0.8	0.008	120	370	1.8
VE1210K251R040	3.2±0.30	2.50±0.25	1.45	40	56	68	112	3	2.4	0.010	250	570	1.8
KEMET Part Number	**L mm**	**W mm**	**t_{max} mm**	**V_{rms} V**	**V_{dc} V**	**V_n 1 mA V**	**V_c V**	**I_c 8/20 µs A**	**W_{max} 10/1000 µs J**	**Pmax W**	**I_{max} 8/20 µs A**	**C_{typ} @ 1 kHz pF**	**L_{typ} 100mA/ns nH**

Table 1 – Ratings & Part Number Reference (cont'd)

KEMET Part Number	L (mm)	W (mm)	t_{max} (mm)	V_{rms}	VDC	V_n 1 mA	V_c	I_c 8/20 µs (A)	W_{max} 10/1000 µs (J)	P_{max} (W)	I_{max} 8/20 µs (A)	C_{typ} at 1 kHz (pF)	L_{typ} 100mA/ns (nH)
VE1812K601R040	4.7±0.40	3.20±0.30	1.55	40	56	68	112	5	4.8	0.015	600	1,000	2.5
VE2220K102R040	5.7±0.50	5.00±0.40	1.45	40	56	68	112	10	9.2	0.020	1,000	2,200	3.0
VE1206K121R050	3.2±0.30	1.60±0.20	1.65	50	65	82	137	1	0.8	0.008	120	340	1.8
VE1210K251R050	3.2±0.30	2.50±0.25	1.75	50	65	82	137	3	1.7	0.010	250	470	1.8
VE1812K401R050	4.7±0.40	3.20±0.30	1.85	50	65	82	137	5	4.8	0.015	400	710	2.5
VE2220K801R050	5.7±0.50	5.00±0.40	1.85	50	65	82	137	10	5.8	0.020	800	1,500	3.0
VE1206K121R060	3.2±0.30	1.60±0.20	1.65	60	85	100	167	1	0.9	0.008	120	330	1.8
VE1210K251R060	3.2±0.30	2.50±0.25	1.75	60	85	100	167	3	2.2	0.010	250	390	1.8
VE1812K401R060	4.7±0.40	3.20±0.30	1.85	60	85	100	167	5	5.8	0.015	400	580	2.5
VE2220K801R060	5.7±0.50	5.00±0.40	1.85	60	85	100	167	10	6.2	0.020	800	1,000	3.0
VE1812K401R075	4.7±0.40	3.20±0.30	1.90	75	100	120	202	5	5.8	0.015	400	440	2.5
VE2220K801R075	5.7±0.50	5.00±0.40	1.90	75	100	120	202	10	6.2	0.020	800	700	3.0
VE1812K301R095	4.7±0.40	3.20±0.30	1.90	95	125	150	252	5	5.2	0.015	300	340	2.5
VE2220K501R095	5.7±0.50	5.00±0.40	1.90	95	125	150	252	10	7.4	0.020	500	600	3.0
VE1812K301R115	4.7±0.40	3.20±0.30	1.90	115	150	180	302	5	5.2	0.015	300	310	2.5
VE2220K501R115	5.7±0.50	5.00±0.40	1.90	115	150	180	302	10	7.4	0.020	500	560	3.0
VE2220K501R130	5.7±0.50	5.00±0.40	1.90	130	170	205	342	10	7.4	0.020	500	500	3.0
KEMET Part Number	**L mm**	**W mm**	**t_{max} mm**	**V_{rms} V**	**V_{dc} V**	**V_n 1 mA V**	**V_c V**	**I_c 8/20 µs A**	**W_{max} 10/1000 µs J**	**Pmax W**	**I_{max} 8/20 µs A**	**C_{typ} @ 1 kHz pF**	**L_{typ} 100mA/ns nH**

Soldering

Popular soldering techniques used for surface mounted components are Wave and Infrared Reflow processes. Both processes can be performed with Pb-containing or Pb-free solders. The termination option available for these soldering techniques is Barrier Type End Terminations.

End Termination	Designation	Recommended and Suitable for	Component RoHS Compliant
Ni Sn Barrier Type End Termination	Ni R1	Pb-containing and Pb-free soldering	Yes

Wave Soldering – this process is generally associated with discrete components mounted on the underside of printed circuit boards, or for large top-side components with bottom-side mounting tabs to be attached, such as the frames of transformers, relays, connectors, etc. SMD varistors to be wave soldered are first glued to the circuit board, usually with an epoxy adhesive. When all components on the PCB have been positioned and an appropriate time is allowed for adhesive curing, the completed assembly is then placed on a conveyor and run through a single, double wave process.

Infrared Reflow Soldering – these reflow processes are typically associated with top-side component placement. This technique utilizes a mixture of adhesive and solder compounds (and sometimes fluxes) that are blended into a paste. The paste is then screened onto PCB soldering pads specifically designed to accept a particular sized SMD component. The recommended solder paste wet layer thickness is 100 to 300 µm. Once the circuit board is fully populated with MD components, it is placed in a reflow environment, where the paste is heated to slightly above its eutectic temperature. When the solder paste reflows, the SMD components are attached to the solder pads.

Solder Fluxes – solder fluxes are generally applied to populated circuit boards to clean oxides forming during the heating process and to facilitate the flowing of the solder. Solder fluxes can be either a part of the solder paste compound or can be separate materials, usually fluids. Recommended fluxes are:

- Non-activated (R) fluxes, whenever possible
- Mildly activated (RMA) fluxes of class L3CN
- Class ORLO

Activated (RA), water soluble or strong acidic fluxes with a chlorine content > 0.2 wt. % are NOT RECOMMENDED. The use of such fluxes could create high leakage current paths along the body of the varistor components.
When a flux is applied prior to wave soldering, it is important to completely dry any residual flux solvents prior to the soldering process.

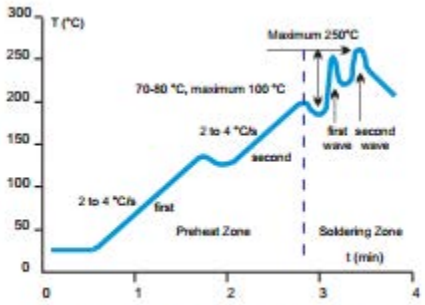

Fig. 1. Wave Soldering Temperature Profile for Pb-free and Pb-containing Soldering

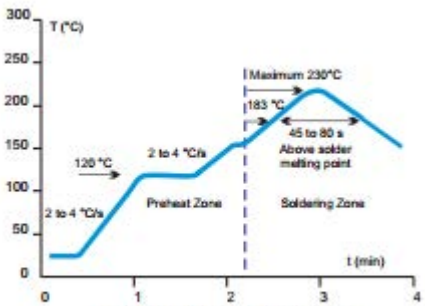

Fig. 2. Infrared Reflow Temperature Profile for Pb-containing Soldering

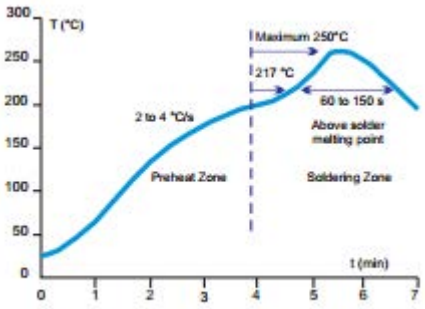

Fig. 3. Reflow Temperature Profile for Pb-free Soldering

Thermal Shock – to avoid the possibility of generating stresses in the varistor chip due to thermal shock, a preheat stage to within 100°C of the peak soldering process temperature is recommended. Additionally, SMD varistors should not be subjected to a temperature gradient greater than 4°C/second, with an ideal gradient being 2°C/second. Peak temperatures should be controlled. Wave and Reflow soldering conditions for SMD varistors with Pb-containing solders are shown in Fig. 1 and 2 respectively, while Wave and Reflow soldering conditions for SMD varistors with Pb-free solders are shown in Figures 1 and 3

Soldering cont'd

Whenever several different types of SMD components are being soldered, each having a specific soldering profile, the soldering profile with the least heat and the minimum amount of heating time is recommended. Once soldering has been completed, it is necessary to minimize the possibility of thermal shock by allowing the hot PCB to cool to less than 50°C before cleaning.

Inspection Criteria – the inspection criteria to determine acceptable solder joints, when Wave or Infrared Reflow processes are used, will depend on several key variables, principally termination material process profiles.

Pb-contining Wave and IR Reflow Soldering – typical "before" and "after" soldering results for Barrier Type End Terminations can be seen in Fig. 4. Barrier type terminated varistors form a reliable electrical contact and metallurgical bond between the end terminations and the solder pads. The bond between these two metallic surfaces is exceptionally strong and has been tested by both vertical pull and lateral (horizontal) push tests. The results exceed established industry standards for adhesion.

The solder joint appearance of a barrier type terminated varistor shows that solder forms a metallurgical junction with the thin tin-alloy (over the barrier layer), and due to its small volume "climbs" the outer surface of the terminations, the meniscus will be slightly lower. This optical appearance should be taken into consideration when programming visual inspection of the PCB after soldering.

Ni Sn Barrier Type End Terminations

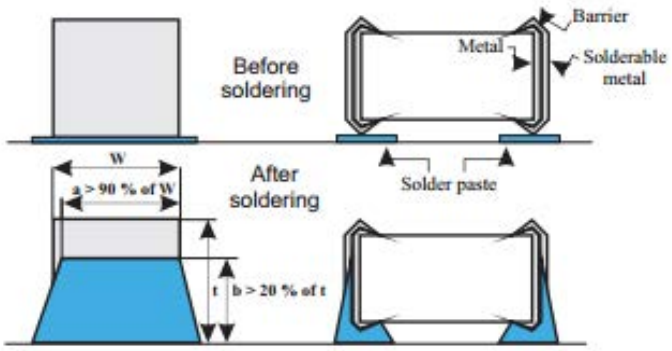

Figure 4: Soldering Criterion in case of Wave and IR Reflow Pb-containing Soldering

Pb-free Wave and IR Reflow Soldering – typical "before" and "after" soldering results for Barrier Type End Terminations are given in a phenomenon knows as "mirror" or "negative" meniscus. Solder forms a metallurgical junction with the entire volume of the end termination, i.e. it diffuses from pad to end termination across the inner side, forming a "mirror" or "negative" meniscus. The height of the solder penetration can be clearly seen on the end termination and is always 30% higher than the chip height.

Soldering cont'd

Solder Test and Retained Samples – reflow soldering test based on J-STD-020D.1 and soldering test by dipping based on IEC 60068-2 for Pb-free solders are preformed on each production lot as shown in the following chart. Test results and accompanying samples are retained for a minimum of two (2) years. The solderability of a specific lot can be checked at any time within this period should a customer require this information.

Test	Resistance to Flux	Solderability	Static leaching (Simulation of Reflow Soldering)	Dynamic Leaching (Simulation of Wave Soldering)
Parameter				
Soldering method	Dipping	Dipping	Dipping	Dipping with agitation
Flux	L3CN, ORL0	L3CN, ORL0, R	L3CN, ORL0, R	L3CN, ORL0, R
Pb Solder	62 Sn/36 Pb/2 Ag			
Pb Soldering temperature (°C)	235±5	235±5	260±5	235±5
Pb-FREE Solder	Sn96/Cu0,4–0,8/3–4Ag			
Pb-FREE Soldering Temperature (°C)	250±5	250±5	280±5	250±5
Soldering Time (s)	2	210	10	> 15
Burn-in Conditions	VDC_{max}, 48 h			
Acceptance Criterion	dVn < 5%, i_{dc} must stay unchanged	> 95% of end termination must be covered by solder	> 95% of end termination must be intact and covered by solder	> 95% of end termination must be intact and covered by solder

Rework Criteria Soldering Iron – unless absolutely necessary, the use of soldering irons is NOT recommended for reworking varistor chips. If no other means of rework is available, the following criteria must be strictly followed:

- Do not allow the tip of the iron to directly contact the top of the chip
- Do not exceed the following soldering iron specifications:

Output Power:	30 Watts maximum
Temperature of Soldering Iron Tip:	280°C maximum
Soldering Time:	10 Seconds maximum

Storage Conditions – SMD varistors should be used within 1 year of shipment from factory to avoid possible soldering problems caused by oxidized terminals. The storage environment should be controlled, with humidity less than 40% and temperature between -25 and 45 °C. Varistor chips should always be stored in their original packaged unit.

Soldering Pad Configuration

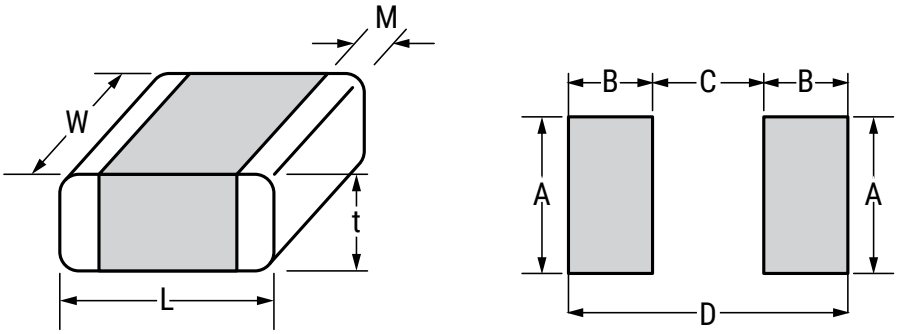

Size	L (mm)	W (mm)	h (mm)	t_{max} (mm)	A (mm)	B (mm)	C (mm)	D (mm)
0603	1.6±0.20	0.80±0.10	0.5±0.25	1.0	1.0	1.0	0.6	2.6
0805	2.0±0.25	1.25±0.20	0.5±0.25	1.1	1.4	1.2	1.0	3.4
1206	3.2±0.30	1.60±0.20	0.5±0.25	1.6	1.8	1.2	2.1	4.5
1210	3.2±0.30	2.50±0.25	0.5±0.25	1.8	2.8	1.2	2.1	4.5
1812	4.7±0.40	3.20±0.30	0.5±0.25	1.9	3.6	1.5	3.2	6.2
2220	5.7±0.50	5.00±0.40	0.5±0.25	1.9	5.5	1.5	4.2	7.2

Packaging

Voltage Range (V)	Chip Size					
	0603	0805	1206	1210	1812	2220
	Reel Size					
	180	180	180	180	180	180
2 – 14	4,000	4,000	4,000	4,000	1,500	1,500
17	3,500	3,500	2,500	2,500	1,500	1,500
20 – 40	3,500	3,500	2,500	2,500	1,000	1,000
50 – 130			2,000	2,000	1,000	1,000

Construction

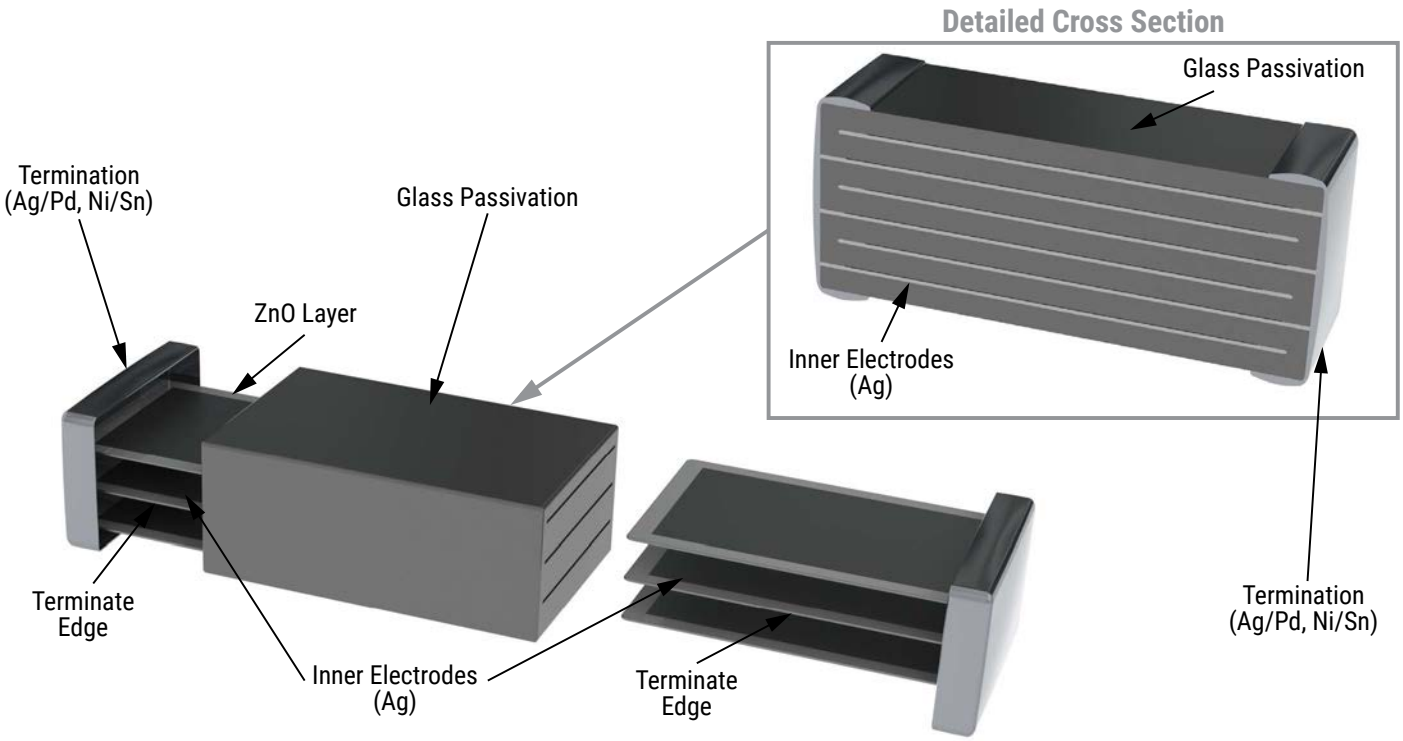

Taping & Reel Specifications

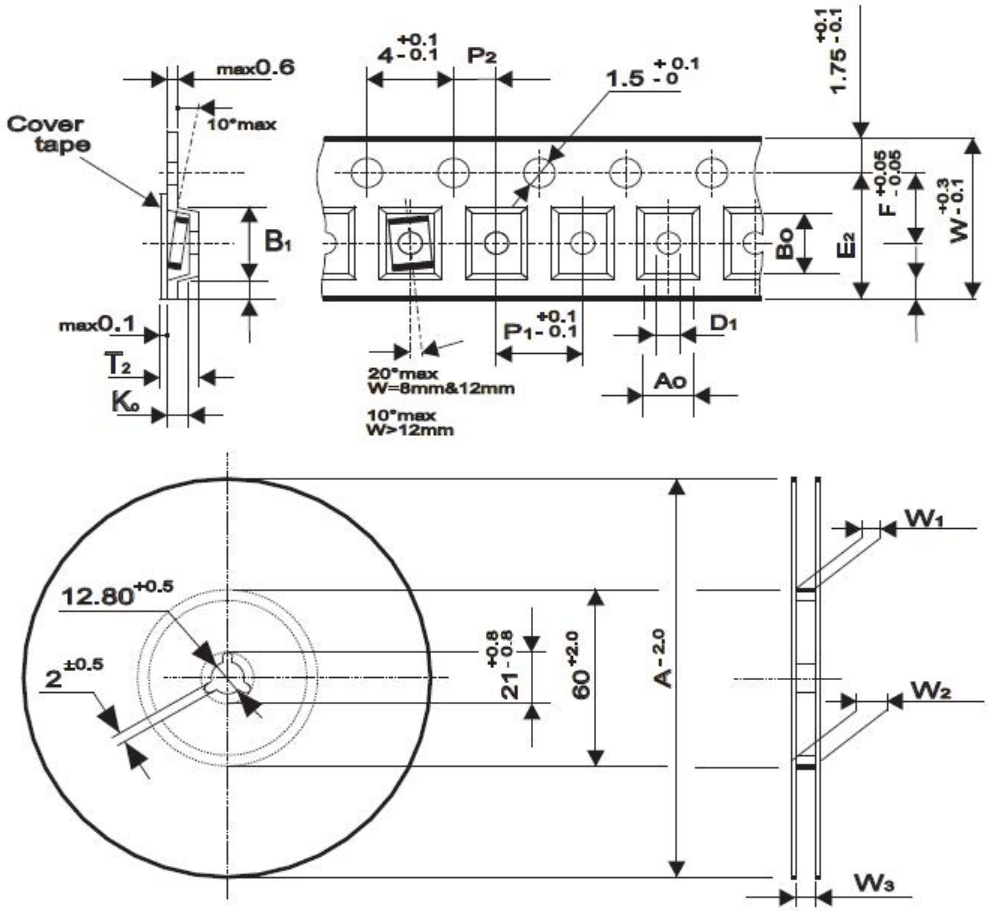

Tape Size (mm)	8 mm				12 mm	
	0603	0805	1206	1210	1812	2220
A_0	1.2	1.6	1.9	2.9	3.75	5.6
B_0	1.9	2.4	3.75	3.7	5.0	6.25
K_0 Maximum	1.1	1.1	1.8	2.0	2.0	2.0
B_1 Maximum	4.35	4.35	4.35	4.35	8.2	8.2
D_1 Minimum	0.3	0.3	0.3	0.3	1.5	1.5
E_2 Minimum	6.25	6.25	6.25	6.25	10.25	10.25
P_1	4.0	4.0	4.0	4.0	8.0	8.0
F	3.5	3.5	3.5	3.5	5.5	5.5
W	8.0	8.0	8.0	8.0	12.0	12.0
T_2 Maximum	3.5	3.5	3.5	3.5	6.5	6.5
W_1	8.4+1.5	8.4+1.5	8.4+1.5	8.4+1.5	12.4+2	12.4+2
W_2 Maximum	14.4	14.4	14.4	14.4	18.4	18.4
W_3	7.9 – 10.9	7.9 – 10.9	7.9 – 10.9	7.9 – 10.9	11.9 – 15.4	11.9 – 15.4
A	180	180	180	180	180	180

Terms and Definitions

Term	Symbol	Definition
Rated AC Voltage	V_{rms}	Maximum continuous sinusoidal AC voltage (< 5% total harmonic distortion) which may be applied to the component under continuous operation conditions at 25°C
Rated DC Voltage	V_{dc}	Maximum continuous DC voltage (< 5% ripple) which may be applied to the component under continuous operating conditions at 25°C
Supply Voltage	V	The voltage by which the system is designated and to which certain operating characteristics of the system are referred; V_{rms} = 1, 1 x V
Leakage Current	I_{dc}	The current passing through the varistor at Vdc and at 25°C or at any other specified temperature
Varistor Voltage	V_n	Voltage across the varistor measured at a given reference current In
Reference Current	I_n	Reference current = 1 mA DC
Clamping Voltage Protection Level	V_c	The peak voltage developed across the varistor under standard atmospheric conditions, when passing an 8/20 µs class current pulse
Class Current	I_c	A peak value of current which is 1/10 of the maximum peak current for 100 pulses at two per minute for the 8/20 µs pulse
Voltage Clamping Ratio	V_c/V_{app}	A figure of merit measure of the varistor clamping effectiveness as defined by the symbols V_c/V_{app}, where (V_{app} = V_{rms} or V_{dc})
Jump Start Transient	V_{jump}	The jump start transient resulting from the temporary application of an overvoltage in excess of the rated battery voltage. The circuit power supply may be subjected to a temporary overvoltage condition due to the voltage regulation failing or it may be deliberately generated when it becomes necessary to boost start the car
Rated Single Pulse Transient Energy	W_{max}	Energy which may be dissipated for a single 10/1,000 µs pulse of a maximum rated current, with rated AC voltage or rated DC voltage also applied, without causing device failure
Load Dump Transient	WLD	Load Dump is a transient which occurs in an automotive environment. It is an exponentially decaying positive voltage which occurs in the event of a battery disconect while the alternator is still generating charging current with other loads remaining on the alternator circuit at the time of battery disconect
Rated Peak Single Pulse Transient Current	I_{max}	Maximum peak current which may be applied for a single 8/20 µs pulse, with, rated line voltage also applies, without causing device failure
Rated Transient Average Power Dissipation	P	Maximum average power which may be dissipated due to a group of pulses occurring within a specified isolated time period, without causing device failure at 25°C
Capacitance	C	Capacitance between two terminals of the varistor measured at 1 kHz
Response Time	tr	The time lag between application of a surge and varistor's "turn-on" conduction action
Varistor Voltage Temperature Coefficient	TC	(V_n at 85°C – V_n at 25°C)/(V_n at 25°C) x 60°C) x 100
Insulation Resistance	IR	Minimum resistance between shorted terminals and varistor surface
Isolation Voltage		The maximum peak voltage which may be applied under continuous operating conditions between the varistor terminations and any conducting mounting surface
Operating Temperature		The range of ambient temperature for which the varistor is designed to operate continuously as defined by the temperature limits of its climatic category
Climatic Category	LCT/UCT/DHD	UCT = Upper Category Temperature – the maximum ambient temperature for which a varistor has been designed to operate continuously, LCT = Lower Category Temperature – the minimum ambient temperature at which a varistor has been designed to operate continuously DHD = Dump Heat Test Duration
Storage Temperature		Storage temperature range without voltage applied

KEMET Electronics Corporation Sales Offices

For a complete list of our global sales offices, please visit www.kemet.com/sales.

Disclaimer

All product specifications, statements, information and data (collectively, the "Information") in this datasheet are subject to change. The customer is responsible for checking and verifying the extent to which the Information contained in this publication is applicable to an order at the time the order is placed. All Information given herein is believed to be accurate and reliable, but it is presented without guarantee, warranty, or responsibility of any kind, expressed or implied.

Statements of suitability for certain applications are based on KEMET Electronics Corporation's ("KEMET") knowledge of typical operating conditions for such applications, but are not intended to constitute – and KEMET specifically disclaims – any warranty concerning suitability for a specific customer application or use. The Information is intended for use only by customers who have the requisite experience and capability to determine the correct products for their application. Any technical advice inferred from this Information or otherwise provided by KEMET with reference to the use of KEMET's products is given gratis, and KEMET assumes no obligation or liability for the advice given or results obtained.

Although KEMET designs and manufactures its products to the most stringent quality and safety standards, given the current state of the art, isolated component failures may still occur. Accordingly, customer applications which require a high degree of reliability or safety should employ suitable designs or other safeguards (such as installation of protective circuitry or redundancies) in order to ensure that the failure of an electrical component does not result in a risk of personal injury or property damage.

Although all product–related warnings, cautions and notes must be observed, the customer should not assume that all safety measures are indicted or that other measures may not be required.

KEMET is a registered trademark of KEMET Electronics Corporation.

OCEAN CHIPS
Океан Электроники
Поставка электронных компонентов

Компания «Океан Электроники» предлагает заключение долгосрочных отношений при поставках импортных электронных компонентов на взаимовыгодных условиях!

Наши преимущества:

- Поставка оригинальных импортных электронных компонентов напрямую с производств Америки, Европы и Азии, а так же с крупнейших складов мира;
- Широкая линейка поставок активных и пассивных импортных электронных компонентов (более 30 млн. наименований);
- Поставка сложных, дефицитных, либо снятых с производства позиций;
- Оперативные сроки поставки под заказ (от 5 рабочих дней);
- Экспресс доставка в любую точку России;
- Помощь Конструкторского Отдела и консультации квалифицированных инженеров;
- Техническая поддержка проекта, помощь в подборе аналогов, поставка прототипов;
- Поставка электронных компонентов под контролем ВП;
- Система менеджмента качества сертифицирована по Международному стандарту ISO 9001;
- При необходимости вся продукция военного и аэрокосмического назначения проходит испытания и сертификацию в лаборатории (по согласованию с заказчиком);
- Поставка специализированных компонентов военного и аэрокосмического уровня качества (Xilinx, Altera, Analog Devices, Intersil, Interpoint, Microsemi, Actel, Aeroflex, Peregrine, VPT, Syfer, Eurofarad, Texas Instruments, MS Kennedy, Miteq, Cobham, E2V, MA-COM, Hittite, Mini-Circuits, General Dynamics и др.);

Компания «Океан Электроники» является официальным дистрибьютором и эксклюзивным представителем в России одного из крупнейших производителей разъемов военного и аэрокосмического назначения **«JONHON»**, а так же официальным дистрибьютором и эксклюзивным представителем в России производителя высокотехнологичных и надежных решений для передачи СВЧ сигналов **«FORSTAR»**.

AVIC JONHON

«JONHON» (основан в 1970 г.)

Разъемы специального, военного и аэрокосмического назначения:

(Применяются в военной, авиационной, аэрокосмической, морской, железнодорожной, горно- и нефтедобывающей отраслях промышленности)

«FORSTAR» (основан в 1998 г.)

ВЧ соединители, коаксиальные кабели, кабельные сборки и микроволновые компоненты:

(Применяются в телекоммуникациях гражданского и специального назначения, в средствах связи, РЛС, а так же военной, авиационной и аэрокосмической отраслях промышленности).

FORSTAR®

Телефон: 8 (812) 309-75-97 (многоканальный)
Факс: 8 (812) 320-03-32
Электронная почта: ocean@oceanchips.ru
Web: http://oceanchips.ru/
Адрес: 198099, г. Санкт-Петербург, ул. Калинина, д. 2, корп. 4, лит. А