ANALOG SIGNAL INPUT 2.5W STEREO Class-D POWER AMPLIFIER

■ GENERAL DESCRIPTION

The **NJU8757** is an analog signal input stereo class-D power amplifier. The **NJU8757** incorporates BTL amplifiers, which eliminate AC coupling capacitors, and it is capable of driving up to 2.5W/channel into R_L=4ohms with simple external LC low-pass filters.

The **NJU8757** includes PWM modulators, an output short protector, a low voltage detector and a pop noise reduction function.

Class-D operation achieves high power-efficiency, which achieves longer battery life for battery powered applications, thus the **NJU8757** is suited for multimedia speaker, PC, etc.

■ PACKAGE OUTLINE

NJU8757V

NJU8757KN2

■ FEATURES

- 2-Channel Analog Differential Input
- 2-Channel BTL Outputs:2.5W/ch at 5V into 4 ohms
- Standby(Hi-Z), Mute Control
- Built-in Low Voltage Detector
- Built-in Short Protector for each channel
- Built-in Pop noise reduction
- Operating Voltage:2.7 to 5.25V
- CMOS Technology
- Package Outline:SSOP32, QFN28-N2

■ PIN CONFIGURATION

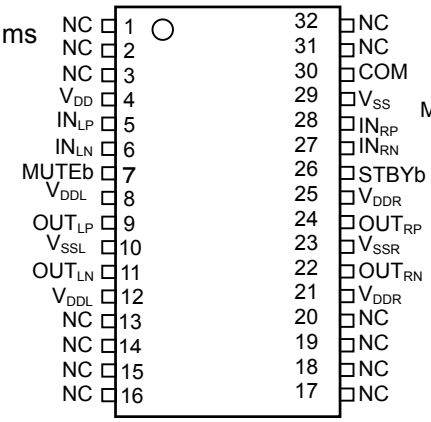

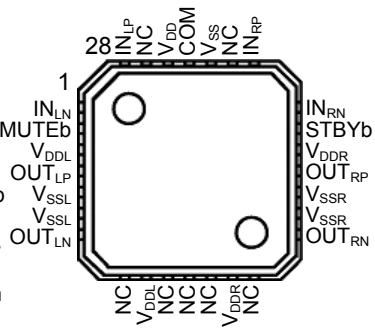

■ BLOCK DIAGRAM

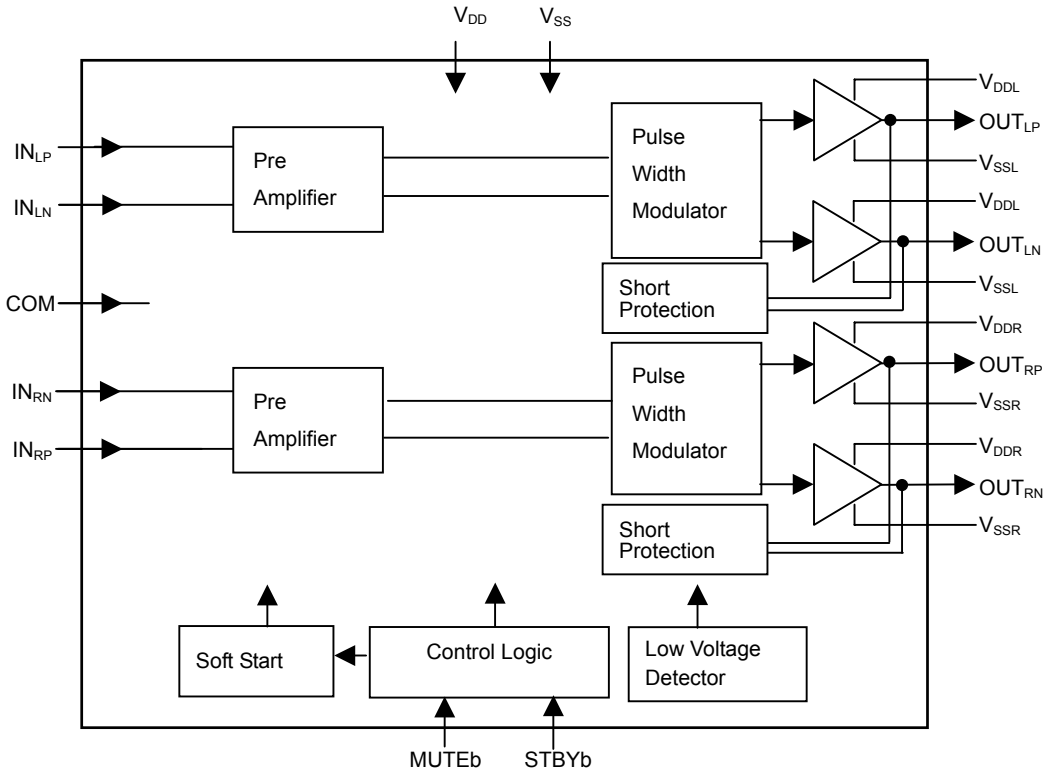

■ PIN DESCRIPTION

No.		SYMBOL	I/O	FUNCTION
SSOP32	QFN28-N2			
4	26	V_{DD}	-	Power Supply : V_{DD}=5.0V
5	28	IN_{LP}	I	L-channel Positive input
6	1	IN_{LN}	I	L-channel Negative input
7	2	MUTEb	I	Mute control Low : Mute ON High : Mute OFF
8,12	3,9	V_{DDL}	-	L-channel Power Supply : V_{DDL}=5.0V
9	4	OUT_{LP}	O	L-channel positive output
10	5,6	V_{SSL}	-	L-channel Power GND
11	7	OUT_{LN}	O	L-channel negative output
21,25	13,19	V_{DDR}	-	R-channel Power Supply : V_{DDR}=5.0V
22	15	OUT_{RN}	O	R-channel negative output
23	16,17	V_{SSR}	-	R-channel Power GND : V_{SSR}=0V
24	18	OUT_{RP}	O	R-channel positive output
26	20	STBYb	I	Standby control Low : Standby ON High : Standby OFF
27	21	IN_{RN}	I	R-channel Negative input
28	22	IN_{RP}	I	L-channel Positive input
29	24	V_{SS}	-	Power GND : V_{SS}=0V
30	25	COM	I	Analog common

Note 1) The relations of "V_{SS}= V_{SSL}= V_{SSR}=0V" and "V_{DD}= V_{DDL}=V_{DDR}" must be maintained.
Note 2) MUTEb and STBYb must be connected to V_{DD}, when these pins are not used.

■ FUNCTIONAL DESCRIPTION

(1) Signal Output

The $OUT_{LP/LN}$ and $OUT_{RP/RN}$ generate respectively L-channel and R-channel PWM output signals, which will be converted to analog signal via external 2nd-order or higher LC filter. A switching regulator with a high response against a voltage fluctuation is the best selection for the V_{DDL} and V_{DDR}, which are the power supply for output drivers. To obtain better THD+N performance, the stabilization of the power is required.

(2) Standby

By setting the STBYB pin to “L”, the standby mode is enabled. In the standby mode, the entire functions of the **NJU8757** enter a low-power state, and the output pins($OUT_{LP/LN}$ and $OUT_{RP/RN}$) are high impedance.

(3) Mute

By setting the MUTEB pin to “L”, the Mute function is enabled. In the Mute mode, the output pins($OUT_{LP/LN}$ and $OUT_{RP/RN}$) output square wave(Duty: 50%).

(4) Low Voltage Detector

When the power supply voltage drops down to below V_{DD}(MIN), the internal oscillation is halted for prevention to generate unwanted frequency, and the output pins($OUT_{LP/LN}$ and $OUT_{RP/RN}$) become in high impedance.

(5) Short Protection

The short protector, which protects the **NJU8757** against high short-circuit current, turns off the output drivers of L-channel and R-channel independently. About 8 seconds after the protection, the **NJU8757** returns to normal operation. When only single-channel shorted, the other channel operates normally unless shorted. However If power supply voltage exceeds operating voltage range, both of short protectors may work together.

The short-protector operates at following accidents.

- Short between OUT_{LP} and OUT_{LN}
- Short between OUT_{LP} and V_{SSL}
- Short between OUT_{LN} and V_{SSL}
- Short between OUT_{RP} and OUT_{RN}
- Short between OUT_{RP} and V_{SSR}
- Short between OUT_{RN} and V_{SSR}

Note 3) The detectable current and the period for the protection depend on the power supply voltage and ambient temperature.

Note 4) The short protector is not effective for a long term short-circuit but for an instantaneous accident. Continuous high-current may cause permanent damage to the **NJU8757**.

■ ABSOLUTE MAXIMUM RATINGS

(Ta=25°C)

PARAMETER	SYMBOL	CONDITIONS	RATING	UNIT
Supply Voltage	V_{DD} V_{DDL} V_{DDR}	OUT_{LP}–V_{DDL},OUT_{LN}–V_{DDL} OUT_{RP}–V_{DDR},OUT_{RN}–V_{DDR} With Schottky barrier diode	-0.3 to + 5.5	V
		OUT_{LP}–V_{DDL},OUT_{LN}–V_{DDL} OUT_{RP}–V_{DDR},OUT_{RN}–V_{DDR} Without Schottky barrier diode	-0.3 to + 5.0	
Input Voltage	Vin	-	-0.3 to V_{DD}+0.3	V
Junction Temperature	Tj	-	-40 to +125	°C
Ambient Temperature	Ta	-	-40 to +85	°C
Storage Temperature	Tstg	-	-40 to +125	°C
Power Dissipation	P_{DS2}	2 layers(EIAJ) SSOP32	1.0	W
	P_{DS4}	4 layers(EIAJ) SSOP32	1.5	
	P_{DQ2}	2 layers(EIAJ) QFN28-N2	0.75	
	P_{DQ4}	4 layers(EIAJ) QFN28-N2	1.8	

Note 5) All voltage are relative to "V_{SS}= V_{SSL}= V_{SSR}=0V" reference.

Note 6) The LSI must be used inside of the "Absolute maximum ratings". Otherwise, a stress may cause permanent damage to the LSI.

Note 7) Refer to "Typical Application Circuit" for the Schottky barrier diode.

Note 8) Power Dissipation

The class-D amplifiers operate with high power efficiency and low dissipation power compared to general analog-amplifiers. In theory, the NJU8757 actualize quite high output-power such as 2.5W/channel at 5V operation into 4 ohms load, and total power is supposed to be 5.0W. For this reason, it looks as if the **NJU8757** exceeds the absolute maximum rating of the power dissipation. However, in practice, the effective output-power of usual music sound is only about 1/5 to 1/10 of its maximum output power, thus it may never exceed the absolute maximum rating.

The maximum power dissipation in the system is calculated, as shown below.

Pdmax(W) = (Tjmax(°C) - Ta(°C)) /θja

Pdmax: Maximum Power Dissipation, Tjmax: Junction Temperature = 125°C
Ta: Ambient Temperature, θja: Thermal Resistance of package.

θja = 100°C / W ,2 layers(EIAJ) SSOP32
θja = 66.7°C / W ,4 layers(EIAJ) SSOP32
θja = 133.3°C / W ,2 layers(EIAJ) QFN28-N2
θja = 55.6°C / W ,4 layers(EIAJ) QFN28-N2

Power dissipation of the **NJU8757** itself is calculated, as shown below.

Pd(W) = P_O(W) X R_O(Ω) / R_L(Ω) + Pd_{IC}(W)

Pd: Power Dissipation, P_O: Output Power, R_O: Internal Resistance(output driver)
R_L: Load Resistance, Pd_{IC}: Power internal circuit

■ ELECTRICAL CHARACTERISTICS

(Ta=25°C, V_{DD}= V_{DDL}= V_{DDR}=5.0V, Input Signal=1kHz, Input Signal Level=200mVrms, Frequency Band=20Hz~20kHz, Load Impedance=4Ω, LC Filter(L=10μH, C=1μF)

PARAMETER	CONDITIONS	SYMBOL	MIN	TYP	MAX	UNIT
V_{DD},V_{DDP},V_{DDN} Supply Voltage	OUT_{LP}–V_{DDL},OUT_{LN}–V_{DDL} OUT_{RP}–V_{DDR},OUT_{RN}–V_{DDR} With Schottky barrier diode	V_{DD1}	2.7	5.0	5.25	V
	OUT_{LP}–V_{DDL},OUT_{LN}–V_{DDL} OUT_{RP}–V_{DDR},OUT_{RN}–V_{DDR} Without Schottky barrier diode	V_{DD2}	2.7	-	4.5	
Input Voltage	MUTEb,STBYb	V_{IH}	0.7VDD	-	VDD	V
		V_{IL}	0	-	0.3VDD	V
Drain-Source On-state Resistance (Low-side)	OUT_{LP}=0.01V,OUT_{LN}=0.01V OUT_{RP}=0.01V,OUT_{RN}=0.01V	R_{DSL}	-	0.4	-	Ω
Drain-Source On-state Resistance (High-side)	OUT_{LP}=V_{DDL}-0.01V,OUT_{LN}=V_{DDL}-0.01V OUT_{RP}=V_{DDR}-0.01V,OUT_{RN}=V_{DDR}-0.01V	R_{DSH}	-	0.4	-	Ω
Operating Current (Standby)	-	I_{ST}	-	0.1	1	μA
Operating Current (No signal input)	No Filter, No Load	I_{DD}	-	7.5	10	mA
Startup Time	MUTEb=L	T_{ON}	-	180	360	ms
Input Resistance	IN_{RP},IN_{LP}	R_{INP}	-	35	-	kΩ
	IN_{RN},IN_{LN}	R_{INN}	-	280	-	
Input Leakage Current	MUTEb,STBYb=5V or 0V	I_{LK}	-	-	±1	μA
	IN_{RP},IN_{LP}=5V or 0V	I_{LKP}	-	-	±50	
	IN_{RN},IN_{LN}=5V or 0V	I_{LKN}	-	-	±25	
Voltage Gain	No Filter, No Load	A_V	-	22.9	-	dB

Note 9) Startup Time : It is a time until the output driver is worked from the STBYb ON.

(Ta=25°C, V_{DD}= V_{DDL}= V_{DDR}=5.0V, Input Signal=1kHz, Input Signal Level=200mVrms, Frequency Band=20Hz~20kHz, Load Impedance=8Ω, LC Filter(L=22μH, C=0.47μF)

PARAMETER	CONDITIONS	SYMBOL	MIN	TYP	MAX	UNIT
Output Power Efficiency	THD+N=10%	$Eeff_8$	-	87	-	%
THD+N	Po=0.5W	$THD+N_8$	-	0.02	-	%
Output Power	THD+N=10%	Po_8	-	1.5	-	W/ch
S/N	A-weight	SNR_8	-	83	-	dB
Channel Separation	1kHz	$Echn_8$	-	78	-	dB
Maximum Mute Attenuation	1kHz	MAT_8	-	85	-	dB
Noise floor	A-weight	V_{N8}	-	200	-	μVrms

(Ta=25°C, V_{DD}= V_{DDL}= V_{DDR}=5.0V, Input Signal=1kHz, Input Signal Level=200mVrms, Frequency Band=20Hz~20kHz, Load Impedance=4Ω, LC Filter(L=10μH, C=1μF)

PARAMETER	CONDITIONS	SYMBOL	MIN	TYP	MAX	UNIT
Output Power Efficiency	THD+N =10%	$Eeff_4$	-	79	-	%
THD+N	Po=1W	$THD+N_4$	-	0.02	-	%
Output Power	THD+N=10%	Po_4	-	2.5	-	W/ch
S/N	A-weight	SNR_4	-	83	-	dB
Channel Separation	1kHz	$Echn_4$	-	78	-	dB
Maximum Mute Attenuation	1kHz	MAT_4	-	85	-	dB
Noise floor	A-weight	V_{N4}	-	200	-	μVrms

Note 10) Test system of the output THD+N.
The output THD+N is tested in the system shown in Figure1, where a 2nd-order LC LPF and another filter incorporated in an audio analyzer are used.

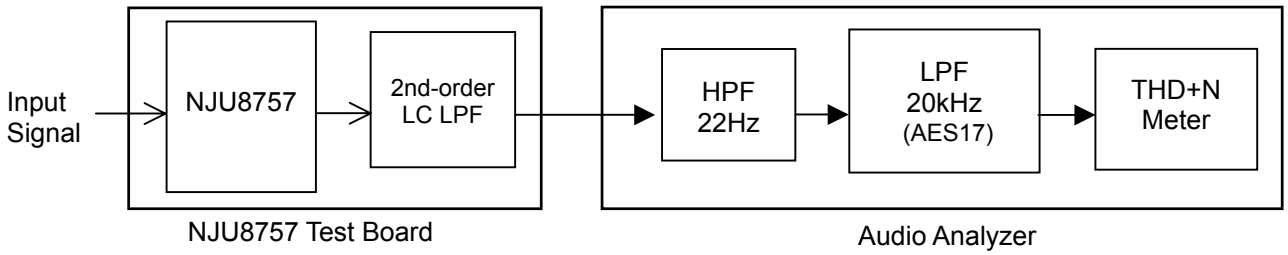

Figure 1. Output THD+N

2nd-order LPF : Refer to “Typical Application Circuit”.
Filters : 22Hz HPF + 20kHz LPF(AES17)

■ TYPICAL APPLICATION CIRCUIT

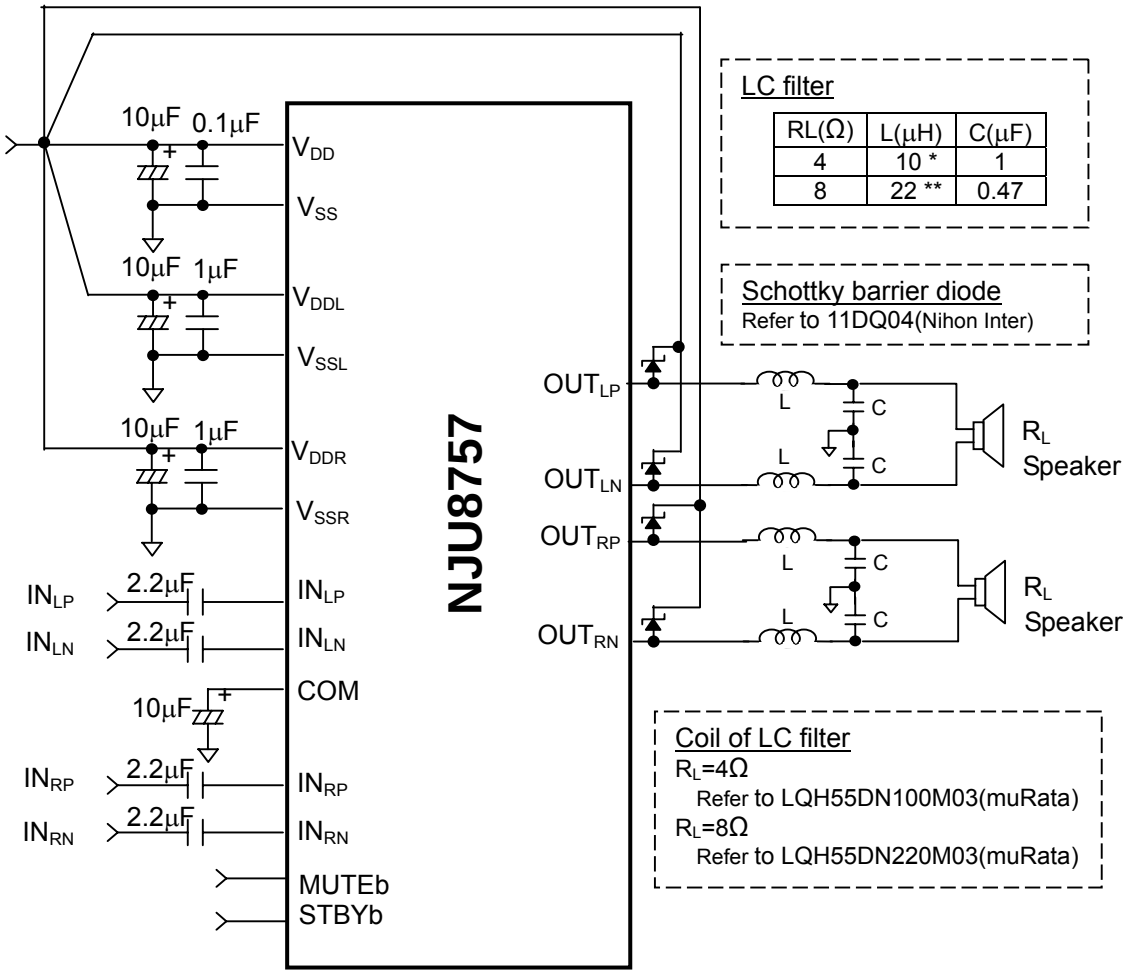

Figure2. Application Circuit example

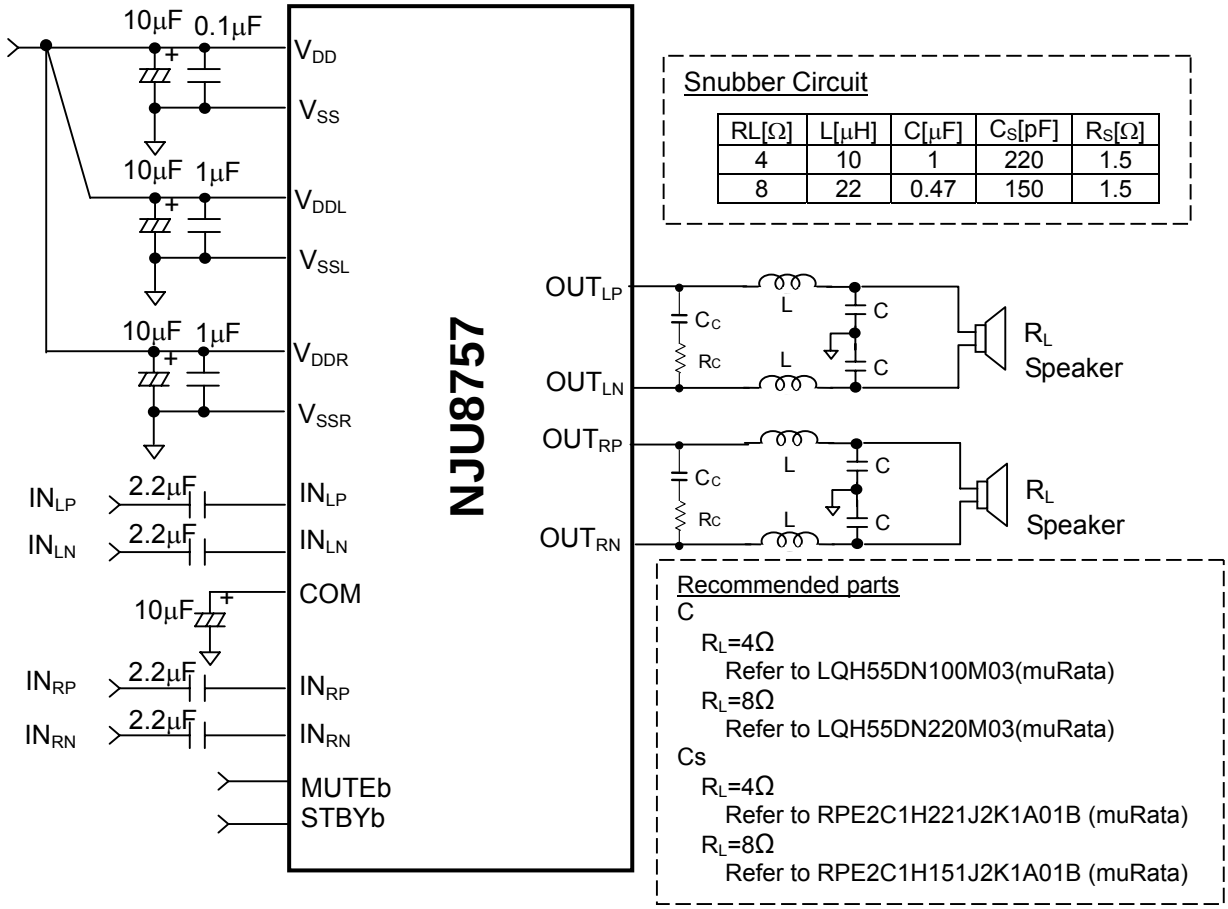

Figure3. Application Circuit example

Note 11) De-coupling capacitors must be connected between each power supply pin and GND.
The capacity value should be adjusted on the application circuit and the operation temperature. It may malfunction if capacity value is small.

Note 12) The power supply for V_{DDL} and V_{DDR} require fast driving response performance such as a switching regulator for better THD+N.

Note 13) THD+N performance becomes worse by ripple if the capacity of De-coupling capacitor is small.

Note 14) The transition time for MUTEb and STBYb signals must be less than 100μs. Otherwise, a malfunction may be occurred.

Note 15) It is necessary to connect the schottky barrier diode and snubber circuit to OUT_{LP}, OUT_{LN}, OUT_{RP} and OUT_{RN} terminal for terminal protection. (Recommended schottky barrier diode: Reverse Current is less than 10mA under the condition of Ta=150°C,V_{DD}=5V and Forward Voltage is about 0.55V under the condition of Ta=25°C,I_F =1A. Recommended Cs of snubber circuit: temperature compensating type, Rs: rated wattage is more than 1/4W.

Note 16) Recommended Coil of LC filter: Rated current is more than 1700mA under the condition of R_L=4Ωand more than 800mA under the condition of R_L=8Ω

Note 17) The cutoff frequency of the LC filter influences the quality of sound.
The Q factor of the LC filter must be less than "1". Otherwise, the operating current increase when the frequency of input signal is closed to the cutoff frequency.

Note 18) The above circuit shows only application example and does not guarantee the any electrical characteristics. Therefore, please test the circuit carefully to fit your application.

[CAUTION]
The specifications on this databook are only given for information , without any guarantee as regards either mistakes or omissions. The application circuits in this databook are described only to show representative usages of the product and not intended for the guarantee or permission of any right including the industrial rights.

Mouser Electronics

Authorized Distributor

Click to View Pricing, Inventory, Delivery & Lifecycle Information:

NJR:

NJU8757V-TE1 NJU8757KN1

OCEAN CHIPS
Океан Электроники
Поставка электронных компонентов

Компания «Океан Электроники» предлагает заключение долгосрочных отношений при поставках импортных электронных компонентов на взаимовыгодных условиях!

Наши преимущества:

- Поставка оригинальных импортных электронных компонентов напрямую с производств Америки, Европы и Азии, а так же с крупнейших складов мира;
- Широкая линейка поставок активных и пассивных импортных электронных компонентов (более 30 млн. наименований);
- Поставка сложных, дефицитных, либо снятых с производства позиций;
- Оперативные сроки поставки под заказ (от 5 рабочих дней);
- Экспресс доставка в любую точку России;
- Помощь Конструкторского Отдела и консультации квалифицированных инженеров;
- Техническая поддержка проекта, помощь в подборе аналогов, поставка прототипов;
- Поставка электронных компонентов под контролем ВП;
- Система менеджмента качества сертифицирована по Международному стандарту ISO 9001;
- При необходимости вся продукция военного и аэрокосмического назначения проходит испытания и сертификацию в лаборатории (по согласованию с заказчиком);
- Поставка специализированных компонентов военного и аэрокосмического уровня качества (Xilinx, Altera, Analog Devices, Intersil, Interpoint, Microsemi, Actel, Aeroflex, Peregrine, VPT, Syfer, Eurofarad, Texas Instruments, MS Kennedy, Miteq, Cobham, E2V, MA-COM, Hittite, Mini-Circuits, General Dynamics и др.);

Компания «Океан Электроники» является официальным дистрибьютором и эксклюзивным представителем в России одного из крупнейших производителей разъемов военного и аэрокосмического назначения **«JONHON»**, а так же официальным дистрибьютором и эксклюзивным представителем в России производителя высокотехнологичных и надежных решений для передачи СВЧ сигналов **«FORSTAR»**.

AVIC JONHON

«JONHON» (основан в 1970 г.)

Разъемы специального, военного и аэрокосмического назначения:

(Применяются в военной, авиационной, аэрокосмической, морской, железнодорожной, горно- и нефтедобывающей отраслях промышленности)

«FORSTAR» (основан в 1998 г.)

ВЧ соединители, коаксиальные кабели, кабельные сборки и микроволновые компоненты:

(Применяются в телекоммуникациях гражданского и специального назначения, в средствах связи, РЛС, а так же военной, авиационной и аэрокосмической отраслях промышленности).

FORSTAR®

Телефон: 8 (812) 309-75-97 (многоканальный)
Факс: 8 (812) 320-03-32
Электронная почта: ocean@oceanchips.ru
Web: http://oceanchips.ru/
Адрес: 198099, г. Санкт-Петербург, ул. Калинина, д. 2, корп. 4, лит. А