19-5625; Rev 11/10

DS1225AB/AD
64k Nonvolatile SRAM

www.maxim-ic.com

FEATURES

- 10 years minimum data retention in the absence of external power
- Data is automatically protected during power loss
- Directly replaces 8k x 8 volatile static RAM or EEPROM
- Unlimited write cycles
- Low-power CMOS
- JEDEC standard 28-pin DIP package
- Read and write access times of 70 ns
- Lithium energy source is electrically disconnected to retain freshness until power is applied for the first time
- Full ±10% V_{CC} operating range (DS1225AD)
- Optional ±5% V_{CC} operating range (DS1225AB)
- Optional industrial temperature range of -40°C to +85°C, designated IND

PIN ASSIGNMENT

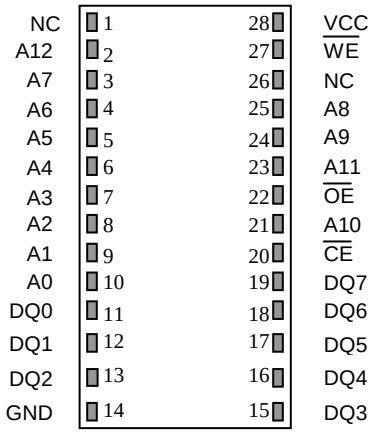

28-Pin ENCAPSULATED PACKAGE
720-mil EXTENDED

PIN DESCRIPTION

A0-A12	- Address Inputs
DQ0-DQ7	- Data In/Data Out
$\overline{CE}$	- Chip Enable
$\overline{WE}$	- Write Enable
$\overline{OE}$	- Output Enable
V_{CC}	- Power (+5V)
GND	- Ground
NC	- No Connect

DESCRIPTION

The DS1225AB and DS1225AD are 65,536-bit, fully static, nonvolatile SRAMs organized as 8192 words by 8 bits. Each NV SRAM has a self-contained lithium energy source and control circuitry which constantly monitors V_{CC} for an out-of-tolerance condition. When such a condition occurs, the lithium energy source is automatically switched on and write protection is unconditionally enabled to prevent data corruption. The NV SRAMs can be used in place of existing 8k x 8 SRAMs directly conforming to the popular bytewide 28-pin DIP standard. The devices also match the pinout of the 2764 EPROM and the 2864 EEPROM, allowing direct substitution while enhancing performance. There is no limit on the number of write cycles that can be executed and no additional support circuitry is required for microprocessor interfacing.

READ MODE

The DS1225AB and DS1225AD execute a read cycle whenever $\overline{WE}$ (Write Enable) is inactive (high) and $\overline{CE}$ (Chip Enable) and $\overline{OE}$ (Output Enable) are active (low). The unique address specified by the 13 address inputs (A_0 -A_{12}) defines which of the 8192 bytes of data is to be accessed. Valid data will be available to the eight data output drivers within t_{ACC} (Access Time) after the last address input signal is stable, providing that $\overline{CE}$ and $\overline{OE}$ access times are also satisfied. If $\overline{CE}$ and $\overline{OE}$ access times are not satisfied, then data access must be measured from the later-occurring signal and the limiting parameter is either t_{CO} for $\overline{CE}$ or t_{OE} for $\overline{OE}$ rather than address access.

WRITE MODE

The DS1225AB and DS1225AD execute a write cycle whenever the $\overline{WE}$ and $\overline{CE}$ signals are active (low) after address inputs are stable. The later-occurring falling edge of $\overline{CE}$ or $\overline{WE}$ will determine the start of the write cycle. The write cycle is terminated by the earlier rising edge of $\overline{CE}$ or $\overline{WE}$. All address inputs must be kept valid throughout the write cycle. $\overline{WE}$ must return to the high state for a minimum recovery time (t_{WR}) before another cycle can be initiated. The $\overline{OE}$ control signal should be kept inactive (high) during write cycles to avoid bus contention. However, if the output drivers are enabled ($\overline{CE}$ and $\overline{OE}$ active) then $\overline{WE}$ will disable the outputs in t_{ODW} from its falling edge.

DATA RETENTION MODE

The DS1225AB provides full functional capability for V_{CC} greater than 4.75 volts and write protects by 4.5 volts. The DS1225AD provides full-functional capability for V_{CC} greater than 4.5 volts and write protects by 4.25 volts. Data is maintained in the absence of V_{CC} without any additional support circuitry. The nonvolatile static RAMs constantly monitor V_{CC}. Should the supply voltage decay, the NV SRAMs automatically write protect themselves, all inputs become “don’t care,” and all outputs become high-impedance. As V_{CC} falls below approximately 3.0 volts, the power switching circuit connects the lithium energy source to RAM to retain data. During power-up, when V_{CC} rises above approximately 3.0 volts, the power switching circuit connects external V_{CC} to RAM and disconnects the lithium energy source. Normal RAM operation can resume after V_{CC} exceeds 4.75 volts for the DS1225AB and 4.5 volts for the DS1225AD.

FRESHNESS SEAL

Each DS1225 is shipped from Maxim with the lithium energy source disconnected, guaranteeing full energy capacity. When V_{CC} is first applied at a level of greater than V_{TP} , the lithium energy source is enabled for battery backup operation.

ABSOLUTE MAXIMUM RATINGS

Voltage on Any Pin Relative to Ground	-0.3V to +6.0V
Operating Temperature	
Commercial:	0°C to +70°C
Industrial:	-40°C to +85°C
Storage Temperature	-40°C to +85°C
Lead Temperature (soldering, 10s)	+260°C

Note: EDIP is wave or hand soldered only.

This is a stress rating only and functional operation of the device at these or any other conditions above those indicated in the operation sections of this specification is not implied. Exposure to absolute maximum rating conditions for extended periods of time may affect reliability.

RECOMMENDED DC OPERATING CONDITIONS

(T_A: See Note 10)

PARAMETER	SYMBOL	MIN	TYP	MAX	UNITS	NOTES
DS1225AB Power Supply Voltage	V_{CC}	4.75	5.0	5.25	V	
DS1225AD Power Supply Voltage	V_{CC}	4.50	5.0	5.5	V	
Logic 1	V_{IH}	2.2		V_{CC}	V	
Logic 0	V_{IL}	0.0		+0.8	V	

DC ELECTRICAL CHARACTERISTICS

(T_A: See Note 10)
(V_{CC} =5V ± 5% for DS1225AB)
(V_{CC} =5V ± 10% for DS1225AD)

PARAMETER	SYMBOL	MIN	TYP	MAX	UNITS	NOTES
Input Leakage Current	I_{IL}	-1.0		+1.0	µA	
I/O Leakage Current $\overline{CE} > V_{IH} < V_{CC}$	I_{IO}	-1.0		+1.0	µA	
Output Current @ 2.4V	I_{OH}	-1.0			mA	
Output Current @ 0.4V	I_{OL}	2.0			mA	
Standby Current $\overline{CE}$ =2.2V	I_{CCS1}		5.0	10.0	mA	
Standby Current $\overline{CE}$ =V_{CC} -0.5V	I_{CCS2}		3.0	5.0	mA	
Operating Current (Commercial)	I_{CC01}			75	mA	
Operating Current (Industrial)	I_{CC01}			85	mA	
Write Protection Voltage (DS1225AB)	V_{TP}	4.50	4.62	4.75	V	
Write Protection Voltage (DS1225AD)	V_{TP}	4.25	4.37	4.5	V	

CAPACITANCE

(T_A = +25°C)

PARAMETER	SYMBOL	MIN	TYP	MAX	UNITS	NOTES
Input Capacitance	C_{IN}		5	10	pF	
Input/Output Capacitance	$C_{I/O}$		5	10	pF	

AC ELECTRICAL CHARACTERISTICS

(T_A: See Note 10)
(V_{CC} =5V ± 5% for DS1225AB)
(V_{CC} =5V ± 10% for DS1225AD)

PARAMETER	SYMBOL	DS1225AB-70 DS1225AD-70		UNITS	NOTES
		MIN	MAX		
Read Cycle Time	t_{RC}	70		ns	
Access Time	t_{ACC}		70	ns	
$\overline{OE}$ to Output Valid	t_{OE}		35	ns	
$\overline{CE}$ to Output Valid	t_{CO}		70	ns	
$\overline{OE}$ or $\overline{CE}$ to Output Active	t_{COE}	5		ns	5
Output High Z from Deselection	t_{OD}		25	ns	5
Output Hold from Address Change	t_{OH}	5		ns	
Write Cycle Time	t_{WC}	70		ns	
Write Pulse Width	t_{WP}	55		ns	3
Address Setup Time	t_{AW}	0		ns	
Write Recovery Time	t_{WR1} t_{WR2}	0 10		ns ns	12 13
Output High Z from $\overline{WE}$	t_{ODW}		25	ns	5
Output Active from $\overline{WE}$	t_{OEW}	5		ns	5
Data Setup Time	t_{DS}	30		ns	4
Data Hold Time	t_{DH1} t_{DH2}	0 10		ns ns	12 13

READ CYCLE

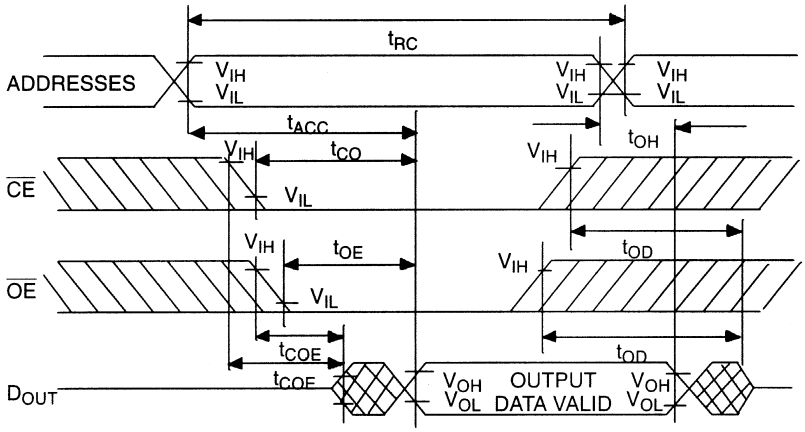

SEE NOTE 1

WRITE CYCLE 1

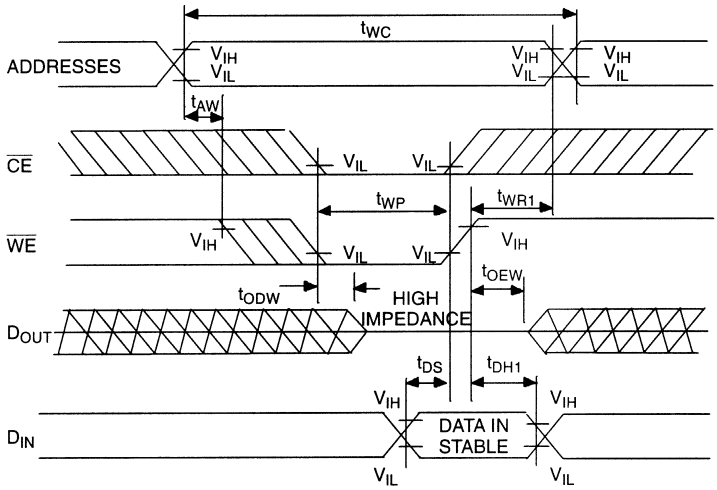

SEE NOTES 2, 3, 4, 6, 7, 8 AND 12

WRITE CYCLE 2

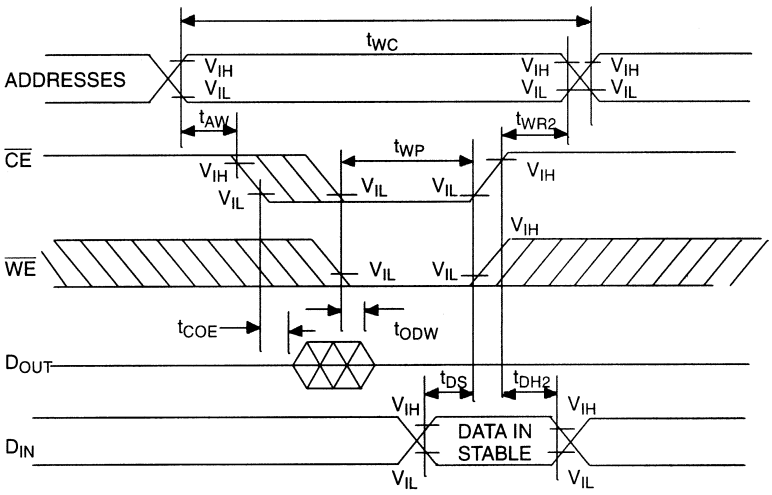

SEE NOTES 2, 3, 4, 6, 7, 8 AND 13

POWER-DOWN/POWER-UP CONDITION

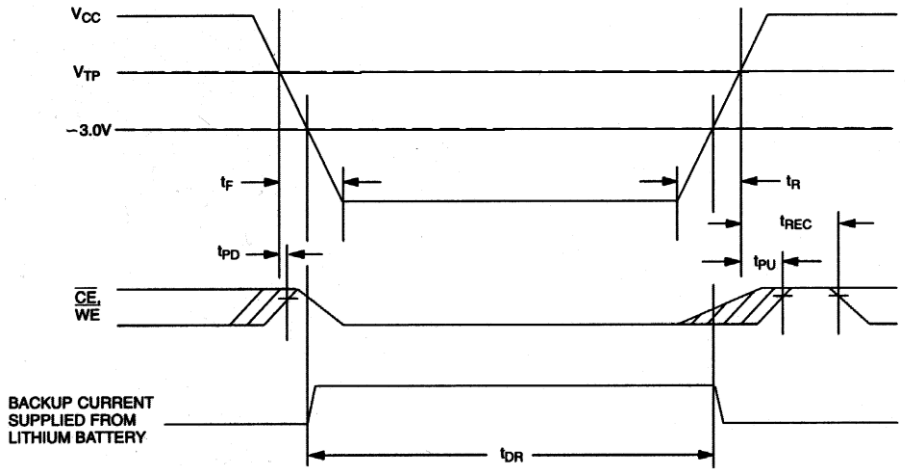

SEE NOTE 11

POWER-DOWN/POWER-UP TIMING

(T_A : See Note 10)

PARAMETER	SYMBOL	MIN	TYP	MAX	UNITS	NOTES
V_{CC} Fail Detect to $\overline{CE}$ and $\overline{WE}$ Inactive	t_{PD}			1.5	µs	11
V_{CC} slew from V_{TP} to 0V	t_F	300			µs	
V_{CC} slew from 0V to V_{TP}	t_R	300			µs	
V_{CC} Valid to $\overline{CE}$ and $\overline{WE}$ Inactive	t_{PU}			2	ms	
V_{CC} Valid to End of Write Protection	t_{REC}			125	ms	

(T_A = +25°C)

PARAMETER	SYMBOL	MIN	TYP	MAX	UNITS	NOTES
Expected Data Retention Time	t_{DR}	10			years	9

WARNING:

Under no circumstance are negative undershoots, of any amplitude, allowed when device is in battery backup mode.

NOTES:

1. $\overline{WE}$ is high for a read cycle.
2. $\overline{OE}$ = V_{IH} or V_{IL}. If $\overline{OE}$ = V_{IH} during write cycle, the output buffers remain in a high-impedance state.
3. t_{WP} is specified as the logical AND of $\overline{CE}$ and $\overline{WE}$. t_{WP} is measured from the latter of $\overline{CE}$ or $\overline{WE}$ going low to the earlier of $\overline{CE}$ or $\overline{WE}$ going high.
4. t_{DS} are measured from the earlier of $\overline{CE}$ or $\overline{WE}$ going high.
5. These parameters are sampled with a 5 pF load and are not 100% tested.
6. If the $\overline{CE}$ low transition occurs simultaneously with or later than the $\overline{WE}$ low transition, the output buffers remain in a high-impedance state during this period.
7. If the $\overline{CE}$ high transition occurs prior to or simultaneously with the $\overline{WE}$ high transition, the output buffers remain in a high-impedance state during this period.
8. If $\overline{WE}$ is low or the $\overline{WE}$ low transition occurs prior to or simultaneously with the $\overline{CE}$ low transition, the output buffers remain in a high-impedance state during this period.
9. Each DS1225AB and each DS1225AD has a built-in switch that disconnects the lithium source until V_{CC} is first applied by the user. The expected t_{DR} is defined as accumulative time in the absence of V_{CC} starting from the time power is first applied by the user. This parameter is guaranteed by design and is not 100% tested.
10. All AC and DC electrical characteristics are valid over the full operating temperature range. For commercial products, this range is 0°C to 70°C. For industrial products (IND), this range is -40°C to +85°C.
11. In a power down condition the voltage on any pin may not exceed the voltage on V_{CC}.
12. t_{WR1} , t_{DH1} are measured from $\overline{WE}$ going high.
13. t_{WR2} , t_{DH2} are measured from $\overline{CE}$ going high.
14. DS1225 modules are recognized by Underwriters Laboratories (UL) under file E99151.

DC TEST CONDITIONS

Outputs Open
Cycle = 200ns for Operating Current
All Voltages Are Referenced to Ground

AC TEST CONDITIONS

Output Load: 100 pF + 1TTL Gate
Input Pulse Levels: 0 - 3.0V
Timing Measurement Reference Levels
Input: 1.5V
Output: 1.5V
Input Pulse Rise and Fall Times: 5ns

ORDERING INFORMATION

PART	TEMP RANGE	SUPPLY TOLERANCE	PIN-PACKAGE	SPEED GRADE (ns)
DS1225AB-70+	0°C to +70°C	5V ± 5%	28 720 EDIP	70
DS1225AB-70IND+	-40°C to +85°C	5V ± 5%	28 720 EDIP	70
DS1225AD-70+	0°C to +70°C	5V ± 10%	28 720 EDIP	70
DS1225AD-70IND+	-40°C to +85°C	5V ± 10%	28 720 EDIP	70

+Denotes a lead(Pb)-free/RoHS-compliant package.

PACKAGE INFORMATION

For the latest package outline information and land patterns, go to **www.maxim-ic.com/packages**. Note that a "+", "#", or "-" in the package code indicates RoHS status only. Package drawings may show a different suffix character, but the drawing pertains to the package regardless of RoHS status.

PACKAGE TYPE	PACKAGE CODE	OUTLINE NO.	LAND PATTERN NO.
28 EDIP	MDT28+2	**21-0245**	—

REVISION HISTORY

REVISION DATE	DESCRIPTION	PAGES CHANGED
121907	Added package information table; removed the DIP module package drawing and dimension table	9
11/10	Updated the storage information, soldering temperature, and lead temperature information in the *Absolute Maximum Ratings* section; removed the -85, -150, and -200 MIN/MAX information from the *AC Electrical Characteristics* table; updated the *Ordering Information* table (removed -85, -150, and -200 parts and leaded -70 parts)	1, 3, 4, 8

OCEAN CHIPS
Океан Электроники
Поставка электронных компонентов

Компания «Океан Электроники» предлагает заключение долгосрочных отношений при поставках импортных электронных компонентов на взаимовыгодных условиях!

Наши преимущества:

- Поставка оригинальных импортных электронных компонентов напрямую с производств Америки, Европы и Азии, а так же с крупнейших складов мира;
- Широкая линейка поставок активных и пассивных импортных электронных компонентов (более 30 млн. наименований);
- Поставка сложных, дефицитных, либо снятых с производства позиций;
- Оперативные сроки поставки под заказ (от 5 рабочих дней);
- Экспресс доставка в любую точку России;
- Помощь Конструкторского Отдела и консультации квалифицированных инженеров;
- Техническая поддержка проекта, помощь в подборе аналогов, поставка прототипов;
- Поставка электронных компонентов под контролем ВП;
- Система менеджмента качества сертифицирована по Международному стандарту ISO 9001;
- При необходимости вся продукция военного и аэрокосмического назначения проходит испытания и сертификацию в лаборатории (по согласованию с заказчиком);
- Поставка специализированных компонентов военного и аэрокосмического уровня качества (Xilinx, Altera, Analog Devices, Intersil, Interpoint, Microsemi, Actel, Aeroflex, Peregrine, VPT, Syfer, Eurofarad, Texas Instruments, MS Kennedy, Miteq, Cobham, E2V, MA-COM, Hittite, Mini-Circuits, General Dynamics и др.);

Компания «Океан Электроники» является официальным дистрибьютором и эксклюзивным представителем в России одного из крупнейших производителей разъемов военного и аэрокосмического назначения **«JONHON»**, а так же официальным дистрибьютором и эксклюзивным представителем в России производителя высокотехнологичных и надежных решений для передачи СВЧ сигналов **«FORSTAR»**.

AVIC JONHON

«JONHON» (основан в 1970 г.)

Разъемы специального, военного и аэрокосмического назначения:

(Применяются в военной, авиационной, аэрокосмической, морской, железнодорожной, горно- и нефтедобывающей отраслях промышленности)

«FORSTAR» (основан в 1998 г.)

ВЧ соединители, коаксиальные кабели, кабельные сборки и микроволновые компоненты:

(Применяются в телекоммуникациях гражданского и специального назначения, в средствах связи, РЛС, а так же военной, авиационной и аэрокосмической отраслях промышленности).

FORSTAR®

Телефон: 8 (812) 309-75-97 (многоканальный)
Факс: 8 (812) 320-03-32
Электронная почта: ocean@oceanchips.ru
Web: http://oceanchips.ru/
Адрес: 198099, г. Санкт-Петербург, ул. Калинина, д. 2, корп. 4, лит. А