Quad T1/E1/J1 Long Haul / Short Haul Transceiver

IDT82P2284

Version 3
March 22, 2004

2975 Stender Way, Santa Clara, California 95054
Telephone: (800) 345-7015 • TWX: 910-338-2070 • FAX: (408) 492-8674
Printed in U.S.A.
© 2001 Integrated Device Technology, Inc.

DISCLAIMER

Integrated Device Technology, Inc. reserves the right to make changes to its products or specifications at any time, without notice, in order to improve design or performance and to supply the best possible product. IDT does not assume any responsibility for use of any circuitry described other than the circuitry embodied in an IDT product. The Company makes no representations that circuitry described herein is free from patent infringement or other rights of third parties which may result from its use. No license is granted by implication or otherwise under any patent, patent rights or other rights, of Integrated Device Technology, Inc.

LIFE SUPPORT POLICY

Integrated Device Technology's products are not authorized for use as critical components in life support devices or systems unless a specific written agreement pertaining to such intended use is executed between the manufacturer and an officer of IDT.

1. Life support devices or systems are devices or systems which (a) are intended for surgical implant into the body or (b) support or sustain life and whose failure to perform, when properly used in accordance with instructions for use provided in the labeling, can be reasonably expected to result in a significant injury to the user.

2. A critical component is any components of a life support device or system whose failure to perform can be reasonably expected to cause the failure of the life support device or system, or to affect its safety or effectiveness.

Table of Contents

FEATURES 1
APPLICATIONS 1
BLOCK DIAGRAM 2
1 PIN ASSIGNMENT 3
2 PIN DESCRIPTION 4
3 FUNCTIONAL DESCRIPTION 12
3.1 T1 / E1 / J1 MODE SELECTION 14
3.2 RECEIVER IMPEDANCE MATCHING 15
3.3 ADAPTIVE EQUALIZER 17
3.4 DATA SLICER 17
3.5 CLOCK AND DATA RECOVERY 17
3.6 RECEIVE JITTER ATTENUATOR 18
3.7 DECODER 19
3.7.1 Line Code Rule 19
3.7.1.1 T1 / J1 Mode 19
3.7.1.2 E1 Mode 19
3.7.2 Decode Error Detection 19
3.7.2.1 T1 / J1 Mode 19
3.7.2.2 E1 Mode 19
3.7.3 LOS Detection 20
3.8 FRAME PROCESSOR 23
3.8.1 T1/J1 Mode 23
3.8.1.1 Synchronization Searching 23
3.8.1.1.1 Super Frame (SF) Format 23
3.8.1.1.2 Extended Super Frame (ESF) Format 24
3.8.1.1.3 T1 Digital Multiplexer (DM) Format (T1 only) 25
3.8.1.1.4 Switch Line Carrier - 96 (SLC-96) Format (T1 only) 26
3.8.1.2 Error Event And Out Of Synchronization Detection 27
3.8.1.2.1 Super Frame (SF) Format 27
3.8.1.2.2 Extended Super Frame (ESF) Format 27
3.8.1.2.3 T1 Digital Multiplexer (DM) Format (T1 only) 27
3.8.1.2.4 Switch Line Carrier - 96 (SLC-96) Format (T1 only) 27
3.8.1.3 Overhead Extraction (T1 Mode SLC-96 Format Only) 28
3.8.1.4 Interrupt Summary 28
3.8.2 E1 Mode 30
3.8.2.1 Synchronization Searching 32
3.8.2.1.1 Basic Frame 32
3.8.2.1.2 CRC Multi-Frame 33
3.8.2.1.3 CAS Signaling Multi-Frame 34
3.8.2.2 Error Event And Out Of Synchronization Detection 34
3.8.2.2.1 Out Of Basic Frame Synchronization 35
3.8.2.2.2 Out Of CRC Multi-Frame Synchronization 35
3.8.2.2.3 Out Of CAS Signaling Multi-Frame Synchronization 35
3.8.2.3 Overhead Extraction 35
3.8.2.3.1 International Bit Extraction 35
3.8.2.3.2 Remote Alarm Indication Bit Extraction 35

3.8.2.3.3 National Bit Extraction 35
3.8.2.3.4 National Bit Codeword Extraction 35
3.8.2.3.5 Extra Bit Extraction 35
3.8.2.3.6 Remote Signaling Multi-Frame Alarm Indication Bit Extraction 35
3.8.2.3.7 Sa6 Code Detection Per ETS 300 233 35
3.8.2.4 V5.2 Link 36
3.8.2.5 Interrupt Summary 36
3.9 PERFORMANCE MONITOR 38
3.9.1 T1/J1 Mode 38
3.9.2 E1 Mode 40
3.10 ALARM DETECTOR 42
3.10.1 T1/J1 Mode 42
3.10.2 E1 Mode 44
3.11 HDLC RECEIVER 45
3.11.1 HDLC Channel Configuration 45
3.11.2 Two HDLC Modes 45
3.11.2.1 HDLC Mode 45
3.11.2.2 SS7 Mode 47
3.12 BIT-ORIENTED MESSAGE RECEIVER (T1/J1 ONLY) 49
3.13 INBAND LOOPBACK CODE DETECTOR (T1/J1 ONLY) 49
3.14 ELASTIC STORE BUFFER 50
3.15 RECEIVE CAS/RBS BUFFER 50
3.15.1 T1/J1 Mode 50
3.15.2 E1 Mode 51
3.16 RECEIVE PAYLOAD CONTROL 53
3.17 RECEIVE SYSTEM INTERFACE 55
3.17.1 T1/J1 Mode 55
3.17.1.1 Receive Clock Master Mode 55
3.17.1.1.1 Receive Clock Master Full T1/J1 Mode 55
3.17.1.1.2 Receive Clock Master Fractional T1/J1 Mode 56
3.17.1.2 Receive Clock Slave Mode 56
3.17.1.3 Receive Multiplexed Mode 57
3.17.1.4 Offset 57
3.17.1.5 Output On RSDn/MRSDA(MRSDB) & RSIGn/MRSIGA(MRSIGB) 59
3.17.2 E1 Mode 60
3.17.2.1 Receive Clock Master Mode 60
3.17.2.1.1 Receive Clock Master Full E1 Mode 60
3.17.2.1.2 Receive Clock Master Fractional E1 Mode 60
3.17.2.2 Receive Clock Slave Mode 60
3.17.2.3 Receive Multiplexed Mode 61
3.17.2.4 Offset 61
3.17.2.5 Output On RSDn/MRSDA(MRSDB) & RSIGn/MRSIGA(MRSIGB) 61
3.18 TRANSMIT SYSTEM INTERFACE 62
3.18.1 T1/J1 Mode 62
3.18.1.1 Transmit Clock Master Mode 62
3.18.1.1.1 Transmit Clock Master Full T1/J1 Mode 63
3.18.1.1.2 Transmit Clock Master Fractional T1/J1 Mode 63
3.18.1.2 Transmit Clock Slave Mode 63
3.18.1.3 Transmit Multiplexed Mode 64
3.18.1.4 Offset 65
3.18.2 E1 Mode 67
3.18.2.1 Transmit Clock Master Mode 67
3.18.2.1.1 Transmit Clock Master Full E1 Mode 67
3.18.2.1.2 Transmit Clock Master Fractional E1 Mode 67

3.18.2.2 Transmit Clock Slave Mode 67
3.18.2.3 Transmit Multiplexed Mode 68
3.18.2.4 Offset 68
3.19 TRANSMIT PAYLOAD CONTROL 69
3.20 FRAME GENERATOR 70
3.20.1 Generation 70
3.20.1.1 T1 / J1 Mode 70
3.20.1.1.1 Super Frame (SF) Format 70
3.20.1.1.2 Extended Super Frame (ESF) Format 70
3.20.1.1.3 T1 Digital Multiplexer (DM) Format (T1 only) 70
3.20.1.1.4 Switch Line Carrier - 96 (SLC-96) Format (T1 only) 70
3.20.1.1.5 Interrupt Summary 71
3.20.1.2 E1 Mode 72
3.20.1.2.1 Interrupt Summary 73
3.20.2 HDLC Transmitter 75
3.20.2.1 HDLC Channel Configuration 75
3.20.2.2 Two HDLC Modes 75
3.20.2.2.1 HDLC Mode 75
3.20.2.2.2 SS7 Mode 75
3.20.2.3 Interrupt Summary 76
3.20.2.4 Reset 76
3.20.3 Automatic Performance Report Message (T1/J1 Only) 77
3.20.4 Bit-Oriented Message Transmitter (T1/J1 Only) 78
3.20.5 Inband Loopback Code Generator (T1/J1 Only) 78
3.20.6 All ‘Zero’s & All ‘One’s 78
3.20.7 Change Of Frame Alignment 78
3.21 TRANSMIT BUFFER 79
3.22 ENCODER 79
3.22.1 Line Code Rule 79
3.22.1.1 T1/J1 Mode 79
3.22.1.2 E1 Mode 79
3.22.2 BPV Error Insertion 79
3.22.3 All ‘One’s Insertion 79
3.23 TRANSMIT JITTER ATTENUATOR 80
3.24 WAVEFORM SHAPER / LINE BUILD OUT 81
3.24.1 Preset Waveform Template 81
3.24.1.1 T1/J1 Mode 81
3.24.1.2 E1 Mode 81
3.24.2 Line Build Out (LBO) (T1 Only) 82
3.24.3 User-Programmable Arbitrary Waveform 82
3.25 LINE DRIVER 89
3.26 TRANSMITTER IMPEDANCE MATCHING 90
3.27 TESTING AND DIAGNOSTIC FACILITIES 91
3.27.1 PRBS Generator / Detector 91
3.27.1.1 Pattern Generator 91
3.27.1.2 Pattern Detector 91
3.27.2 Loopback 92
3.27.2.1 System Loopback 92
3.27.2.1.1 System Remote Loopback 92
3.27.2.1.2 System Local Loopback 92
3.27.2.2 Payload Loopback 92
3.27.2.3 Local Digital Loopback 1 92
3.27.2.4 Remote Loopback 92
3.27.2.5 Local Digital Loopback 2 92

3.27.2.6 Analog Loopback 92
3.27.3 G.772 Non-Intrusive Monitoring 92
3.28 INTERRUPT SUMMARY 95
4 OPERATION 96
4.1 POWER-ON SEQUENCE 96
4.2 RESET 96
4.3 RECEIVE / TRANSMIT PATH POWER DOWN 96
4.4 MICROPROCESSOR INTERFACE 97
4.4.1 SPI Mode 97
4.4.2 Parallel Microprocessor Interface 98
4.5 INDIRECT REGISTER ACCESS SCHEME 99
4.5.1 Indirect Register Read Access 99
4.5.2 Indirect Register Write Access 99
5 PROGRAMMING INFORMATION 100
5.1 REGISTER MAP 100
5.1.1 T1/J1 Mode 100
5.1.1.1 Direct Register 100
5.1.1.2 Indirect Register 105
5.1.2 E1 Mode 106
5.1.2.1 Direct Register 106
5.1.2.2 Indirect Register 111
5.2 REGISTER DESCRIPTION 113
5.2.1 T1/J1 Mode 114
5.2.1.1 Direct Register 114
5.2.1.2 Indirect Register 216
5.2.2 E1 Mode 229
5.2.2.1 Direct Register 229
5.2.2.2 Indirect Register 332
6 IEEE STD 1149.1 JTAG TEST ACCESS PORT 347
6.1 JTAG INSTRUCTIONS AND INSTRUCTION REGISTER (IR) 348
6.2 JTAG DATA REGISTER 349
6.2.1 Device Identification Register (IDR) 349
6.2.2 Bypass Register (BYP) 349
6.2.3 Boundary Scan Register (BSR) 349
6.3 TEST ACCESS PORT CONTROLLER 352
7 PHYSICAL AND ELECTRICAL SPECIFICATIONS 355
7.1 ABSOLUTE MAXIMUM RATINGS 355
7.2 RECOMMENDED OPERATING CONDITIONS 355
7.3 D.C. CHARACTERISTICS 356
7.4 DIGITAL I/O TIMING CHARACTERISTICS 357
7.5 CLOCK FREQUENCY REQUIREMENT 357
7.6 T1/J1 LINE RECEIVER ELECTRICAL CHARACTERISTICS 358
7.7 E1 LINE RECEIVER ELECTRICAL CHARACTERISTICS 359
7.8 T1/J1 LINE TRANSMITTER ELECTRICAL CHARACTERISTICS 360
7.9 E1 LINE TRANSMITTER ELECTRICAL CHARACTERISTICS 361
7.10 JITTER TOLERANCE 362
7.10.1 T1/J1 Mode 362
7.10.2 E1 Mode 363
7.11 JITTER TRANSFER 364
7.11.1 T1/J1 Mode 364
7.11.2 E1 Mode 365
7.12 MICROPROCESSOR TIMING SPECIFICATION 366
7.12.1 Motorola Non-Multiplexed Mode 366

7.12.1.1 Read Cycle Specification 366
7.12.1.2 Write Cycle Specification 367
7.12.2 Intel Non-Multiplexed Mode 368
7.12.2.1 Read Cycle Specification 368
7.12.2.2 Write Cycle Specification 369
7.12.3 SPI Mode 370
ORDERING INFORMATION 373

List of Tables

Table 1: Operating Mode Selection 14
Table 2: Related Bit / Register In Chapter 3.1 14
Table 3: Impedance Matching Value For The Receiver 15
Table 4: Related Bit / Register In Chapter 3.2 16
Table 5: Related Bit / Register In Chapter 3.3 & Chapter 3.4 17
Table 6: Criteria Of Speed Adjustment Start 18
Table 7: Related Bit / Register In Chapter 3.6 18
Table 8: Excessive Zero Error Definition 19
Table 9: LOS Condition In T1/J1 Mode 21
Table 10: LOS Condition In E1 Mode 21
Table 11: Related Bit / Register In Chapter 3.7 22
Table 12: The Structure of SF 23
Table 13: The Structure of ESF 24
Table 14: The Structure of T1 DM 25
Table 15: The Structure of SLC-96 26
Table 16: Interrupt Source In T1/J1 Frame Processor 28
Table 17: Related Bit / Register In Chapter 3.8.1 29
Table 18: The Structure Of TS0 In CRC Multi-Frame 33
Table 19: FAS/NFAS Bit/Pattern Error Criteria 34
Table 20: Interrupt Source In E1 Frame Processor 36
Table 21: Related Bit / Register In Chapter 3.8.2 37
Table 22: Monitored Events In T1/J1 Mode 38
Table 23: Related Bit / Register In Chapter 3.9.1 39
Table 24: Monitored Events In E1 Mode 40
Table 25: Related Bit / Register In Chapter 3.9.2 41
Table 26: RED Alarm, Yellow Alarm & Blue Alarm Criteria 42
Table 27: Related Bit / Register In Chapter 3.10.1 43
Table 28: Related Bit / Register In Chapter 3.10.2 44
Table 29: Related Bit / Register In Chapter 3.11.1 45
Table 30: Interrupt Summarize In HDLC Mode 46
Table 31: Related Bit / Register In Chapter 3.11.2 48
Table 32: Related Bit / Register In Chapter 3.12 49
Table 33: Related Bit / Register In Chapter 3.13 49
Table 34: Related Bit / Register In Chapter 3.14 50
Table 35: Related Bit / Register In Chapter 3.15 52
Table 36: A-Law Digital Milliwatt Pattern 53
Table 37: µ-Law Digital Milliwatt Pattern 53
Table 38: Related Bit / Register In Chapter 3.16 54
Table 39: Operating Modes Selection In T1/J1 Receive Path 55
Table 40: Operating Modes Selection In E1 Receive Path 60
Table 41: Related Bit / Register In Chapter 3.17 61
Table 42: Operating Modes Selection In T1/J1 Transmit Path 62
Table 43: Operating Modes Selection In E1 Transmit Path 67
Table 44: Related Bit / Register In Chapter 3.18 68
Table 45: Related Bit / Register In Chapter 3.19 69
Table 46: Related Bit / Register In Chapter 3.20.1.1 71
Table 47: E1 Frame Generation 72
Table 48: Control Over E Bits 72

Table 49: Interrupt Summary In E1 Mode 73
Table 50: Related Bit / Register In Chapter 3.20.1.2 74
Table 51: Related Bit / Register In Chapter 3.20.2.1 75
Table 52: Related Bit / Register In Chapter 3.20.2.2 ~ Chapter 3.20.2.4 76
Table 53: APRM Message Format 77
Table 54: APRM Interpretation 77
Table 55: Related Bit / Register In Chapter 3.20.3 78
Table 56: Related Bit / Register In Chapter 3.20.4 & Chapter 3.20.5 78
Table 57: Related Bit / Register In Chapter 3.20.6, Chapter 3.20.7 & Chapter 3.21 79
Table 58: Related Bit / Register In Chapter 3.22 79
Table 59: Related Bit / Register In Chapter 3.23 80
Table 60: PULS[3:0] Setting In T1/J1 Mode 81
Table 61: LBO PULS[3:0] Setting In T1 Mode 82
Table 62: Transmit Waveform Value For E1 75 Ω 83
Table 63: Transmit Waveform Value For E1 120 Ω 83
Table 64: Transmit Waveform Value For T1 0~133 ft 84
Table 65: Transmit Waveform Value For T1 133~266 ft 84
Table 66: Transmit Waveform Value For T1 266~399 ft 85
Table 67: Transmit Waveform Value For T1 399~533 ft 85
Table 68: Transmit Waveform Value For T1 533~655 ft 86
Table 69: Transmit Waveform Value For J1 0~655ft 86
Table 70: Transmit Waveform Value For DS1 0 dB LBO 87
Table 71: Transmit Waveform Value For DS1 -7.5 dB LBO 87
Table 72: Transmit Waveform Value For DS1 -15.0 dB LBO 88
Table 73: Transmit Waveform Value For DS1 -22.5 dB LBO 88
Table 74: Related Bit / Register In Chapter 3.24 88
Table 75: Impedance Matching Value For The Transmitter 90
Table 76: Related Bit / Register In Chapter 3.25 & Chapter 3.26 90
Table 77: Related Bit / Register In Chapter 3.27.1 91
Table 78: Related Bit / Register In Chapter 3.27.2 & Chapter 3.27.3 94
Table 79: Related Bit / Register In Chapter 3.28 95
Table 80: Parallel Microprocessor Interface 98
Table 81: Related Bit / Register In Chapter 4 99
Table 82: IR Code 348
Table 83: IDR 349
Table 84: Boundary Scan (BS) Sequence 349
Table 85: TAP Controller State Description 352

List of Figures

Figure 1. 208-Pin PBGA (Top View) ... 3
Figure 2. Receive / Transmit Line Circuit ... 15
Figure 3. Monitoring Receive Path ... 16
Figure 4. Monitoring Transmit Path ... 16
Figure 5. Jitter Attenuator ... 18
Figure 6. AMI Bipolar Violation Error ... 20
Figure 7. B8ZS Excessive Zero Error ... 20
Figure 8. HDB3 Code Violation & Excessive Zero Error ... 20
Figure 9. E1 Frame Searching Process ... 31
Figure 10. Basic Frame Searching Process ... 32
Figure 11. TS16 Structure Of CAS Signaling Multi-Frame ... 34
Figure 12. Standard HDLC Packet ... 45
Figure 13. Overhead Indication In The FIFO ... 46
Figure 14. Standard SS7 Packet ... 47
Figure 15. Signaling Output In T1/J1 Mode ... 51
Figure 16. Signaling Output In E1 Mode ... 51
Figure 17. T1/J1 To E1 Format Mapping - G.802 Mode ... 56
Figure 18. T1/J1 To E1 Format Mapping - One Filler Every Four Channels Mode ... 56
Figure 19. T1/J1 To E1 Format Mapping - Continuous Channels Mode ... 57
Figure 20. No Offset When FE = 1 & DE = 1 In Receive Path ... 58
Figure 21. No Offset When FE = 0 & DE = 0 In Receive Path ... 58
Figure 22. No Offset When FE = 0 & DE = 1 In Receive Path ... 59
Figure 23. No Offset When FE = 1 & DE = 0 In Receive Path ... 59
Figure 24. E1 To T1/J1 Format Mapping - G.802 Mode ... 63
Figure 25. E1 To T1/J1 Format Mapping - One Filler Every Four Channels Mode ... 63
Figure 26. E1 To T1/J1 Format Mapping - Continuous Channels Mode ... 64
Figure 27. No Offset When FE = 1 & DE = 1 In Transmit Path ... 65
Figure 28. No Offset When FE = 0 & DE = 0 In Transmit Path ... 65
Figure 29. No Offset When FE = 0 & DE = 1 In Transmit Path ... 66
Figure 30. No Offset When FE = 1 & DE = 0 In Transmit Path ... 66
Figure 31. DSX-1 Waveform Template ... 81
Figure 32. T1/J1 Pulse Template Measurement Circuit ... 81
Figure 33. E1 Waveform Template ... 81
Figure 34. E1 Pulse Template Measurement Circuit ... 81
Figure 35. G.772 Non-Intrusive Monitor ... 93
Figure 36. Hardware Reset When Powered-Up ... 96
Figure 37. Hardware Reset In Normal Operation ... 96
Figure 38. Read Operation In SPI Mode ... 97
Figure 39. Write Operation In SPI Mode ... 97
Figure 40. JTAG Architecture ... 347
Figure 41. JTAG State Diagram ... 354
Figure 42. I/O Timing in Mode ... 357
Figure 43. T1/J1 Jitter Tolerance Performance Requirement ... 362
Figure 44. E1 Jitter Tolerance Performance Requirement ... 363
Figure 45. T1/J1 Jitter Transfer Performance Requirement (AT&T62411 / GR-253-CORE / TR-TSY-000009) ... 364
Figure 46. E1 Jitter Transfer Performance Requirement (G.736) ... 365
Figure 47. Motorola Non-Multiplexed Mode Read Cycle ... 366
Figure 48. Motorola Non-Multiplexed Mode Write Cycle ... 367

Figure 49. Intel Non-Multiplexed Mode Read Cycle 368
Figure 50. Intel Non-Multiplexed Mode Write Cycle 369
Figure 51. SPI Timing Diagram 370

Quad T1/E1/J1 Long Haul / Short Haul Transceiver

IDT82P2284

FEATURES

LINE INTERFACE

- Each link can be configured as T1, E1 or J1
- Supports T1/E1/J1 long haul/short haul line interface
- HPS for 1+1 protection without external relays
- Receive sensitivity exceeds -36 dB @ 772 Hz and -43 dB @ 1024 Hz
- Selectable internal line termination impedance: 100 Ω (for T1), 75 Ω / 120 Ω (for E1) and 110 Ω (for J1)
- Supports AMI/B8ZS (for T1/J1) and AMI/HDB3 (for E1) line encoding/decoding
- Provides T1/E1/J1 short haul pulse templates, long haul LBO (per ANSI T1.403 and FCC68: 0 dB, -7.5 dB, -15 dB, -22 dB) and user-programmable arbitrary pulse template
- Supports G.772 non-intrusive monitoring
- Supports T1.102 line monitor
- Transmit line short-circuit detection and protection
- Separate Transmit and Receive Jitter Attenuators (2 per link)
- Indicates the interval between the write pointer and the read pointer of the FIFO in JA
- Loss of signal indication with programmable thresholds according to ITUT-T G.775, ETS 300 233 (E1) and ANSI T1.403 (T1/J1)
- Supports Analog Loopback, Digital Loopback and Remote Loopback
- Each receiver and transmitter can be individually powered down

FRAMER

- Each link can be configured as T1, E1 or J1
- Frame alignment/generation for T1 (per ITU-T G.704, TA-TSY-000278, TR-TSY-000008), E1 (per ITU-T G.704), J1 (per JT G.704) and un-framed mode
- Supports T1/J1 Super Frame and Extended Super Frame, T1 Digital Multiplexer and Switch Line Carrier - 96, E1 CRC Multi-frame and Signaling Multi-frame
- Signaling extraction/insertion for CAS and RBS signaling
- Provides programmable system interface supporting Mitel™ ST-bus, AT&T™ CHI and MVIP bus, 8.192 Mb/s multiplexed bus and 1.544 Mb/s or 2.048 Mb/s non-multiplexed bus
- Three HDLC controllers per link with separate 128-byte transmit and receive FIFOs per controller
- Supports Signaling System #7 (SS7)
- Programmable bit insertion and bit inversion on per channel/timeslot basis
- Provides Bit Oriented Message (BOM) generation and detection
- Provides Automatic Performance Report Message (APRM) generation
- Detects and generates alarms (AIS, RAI)
- Provides performance monitor to count Bipolar Violation error, Excess Zero error, CRC error, framing bit error, far end CRC error, out of frame and change of framing alignment position
- Supports System Loopback, Payload Loopback, Digital Loopback and Inband Loopback
- Detects and generates selectable PRBS and QRSS

CONTROL INTERFACE

- Supports Serial Peripheral Interface (SPI) microprocessor and parallel Intel/Motorola non-multiplexed microprocessor interface
- Global hardware and software reset
- Two general purpose I/O pins
- Per link power down

GENERAL

- Flexible reference clock (N x 1.544 MHz or N x 2.048 MHz) (0<N<5)
- JTAG boundary scan
- 3.3 V I/O with 5 V tolerant inputs
- Low power consumption (Typical 450 mW)
- 3.3 V and 1.8 V power supply
- 208-pin PBGA package

APPLICATIONS

- C.O, PABX, ISDN PRI
- Wireless Base Stations
- T1/E1/J1 ATM Gateways, Multiplexer
- T1/E1/J1 Access Networks
- LAN/WAN Router
- Digital Cross Connect
- SONET/SDH Add/Drop Equipment

The IDT and the IDT logo are registered trademarks of Integrated Device Technology, Inc.

© 2002 Integrated Device Technology, Inc.

BLOCK DIAGRAM

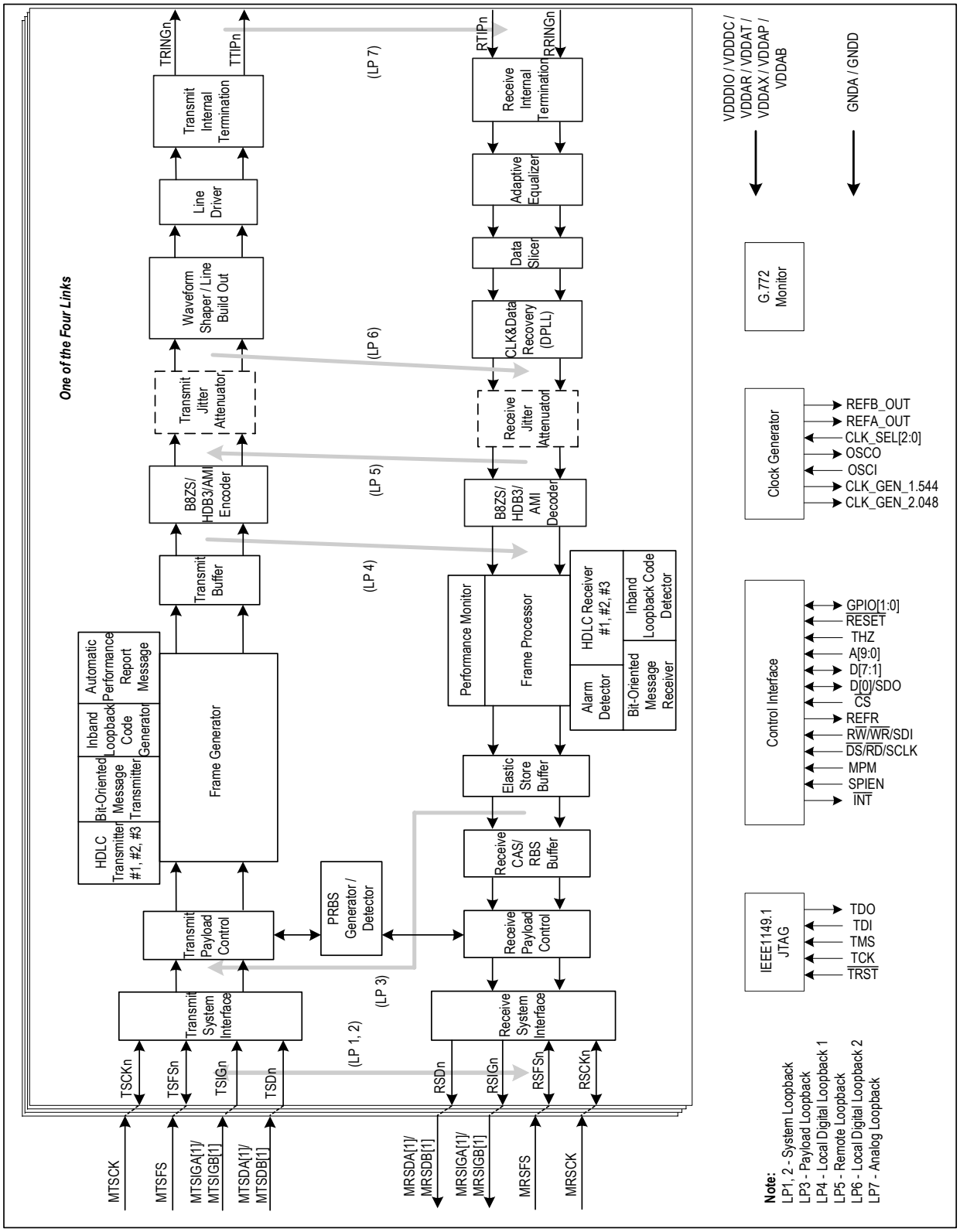

1 PIN ASSIGNMENT

	1	2	3	4	5	6	7	8	9	10	11	12	13	14	15	16	
A	TTIP4	TRING4	VDDAT4	VDDAR4	VDDAR3	TRING3	TTIP3	TTIP2	TRING2	VDDAR1	TRING1	TTIP1	VDDAP	$\overline{\text{RESET}}$	REFA_ OUT	CLK_GE N_1.544	A
B	NC	VDDAX4	GNDA	RTIP4	VDDAT3	GNDA	VDDAX3	VDDAX2	VDDAT2	GNDA	GNDA	VDDAT1	OSCI	REFB_ OUT	CLK_SEL 2	THZ	B
C	NC	NC	GNDA	RRING4	GNDA	GNDA	GNDA	GNDA	VDDAR2	GNDA	RTIP1	VDDAX1	OSCO	CLK_SEL 1	IC	REFR	C
D	NC	NC	GNDA	GNDA	RRING3	RTIP3	GNDA	RTIP2	RRING2	GNDA	RRING1	VDDAB	GPIO1	CLK_GE N_2.048	CLK_SEL 0	IC	D
E	TSIG2/ MTSIGB1	NC	NC	NC									GPIO0	VDDDIO	VDDDIO	NC	E
F	TSIG1/ MTSIGA1	TSD2/ MTSDB1	TSD4	TSIG4									GNDD	NC	GNDD	NC	F
G	TSFS4	TSD1/ MTSDA1	TSD3	TSIG3			GNDD	GNDD	GNDD	GNDD			GNDD	NC	GNDD	VDDDIO	G
H	TSFS3	TSCK4	NC	NC			VDDDC	VDDDC	GNDD	GNDD			NC	VDDDIO	VDDDIO	NC	H
J	TSCK3	TSFS2	NC	NC			VDDDC	VDDDC	VDDDC	VDDDC			NC	GNDD	VDDDIO	NC	J
K	TSCK2	TSFS1/ MTSFS	NC	NC			VDDDC	VDDDC	VDDDC	VDDDC			GNDD	GNDD	VDDDIO	NC	K
L	TSCK1/ MTSCK	NC	NC	NC									NC	GNDD	GNDD	NC	L
M	NC	NC	NC	NC									NC	GNDD	VDDDIO	VDDDIO	M
N	NC	NC	RSIG4	RSFS3	RSFS1/ MRSFS	A2	A6	NC	D1	$\overline{\text{CS}}$	IC	$\overline{\text{TRST}}$	GNDD	NC	NC	VDDDIO	N
P	RSD4	RSIG2/ MRSIGB1	RSD1/ MRSDA1	RSCK3	RSCK1/ MRSCK	A3	A7	D7	D2	$\overline{\text{RW}}$/$\overline{\text{WR}}$ /SDI	MPM	IC	GNDD	GNDD	GNDD	VDDDIO	P
R	RSIG3	RSD2/ MRSDB1	RSFS4	RSFS2	A0	A4	A8	D6	D3	$\overline{\text{DS}}$/$\overline{\text{RD}}$ /SCLK	SPIEN	NC	TDI	TMS	VDDDIO	NC	R
T	RSD3	RSIG1/ MRSIGA1	RSCK4	RSCK2	A1	A5	A9	D5	D4	D0/SDO	$\overline{\text{INT}}$	IC	TDO	TCK	NC	NC	T
	1	2	3	4	5	6	7	8	9	10	11	12	13	14	15	16	

Figure 1. 208-Pin PBGA (Top View)

2 PIN DESCRIPTION

Name	Type	Pin No.	Description
			Line and System Interface
RTIP[1] RTIP[2] RTIP[3] RTIP[4] RRING[1] RRING[2] RRING[3] RRING[4]	Input	C11 D8 D6 B4 D11 D9 D5 C4	**RTIP[1:4] / RRING[1:4]: Receive Bipolar Tip/Ring for Link 1 ~ 4** These pins are the differential line receiver inputs.
TTIP[1] TTIP[2] TTIP[3] TTIP[4] TRING[1] TRING[2] TRING[3] TRING[4]	Output	A12 A8 A7 A1 A11 A9 A6 A2	**TTIP[1:4] / TRING[1:4]: Transmit Bipolar Tip/Ring for Link 1 ~ 4** These pins are the differential line driver outputs and can be set to high impedance state globally or individually. A logic high on the THZ pin sets all these pins to high impedance state. When the T_HZ bit (b4, T1/J1-023H,... / b4, E1-023H,...) * is set to '1', the TTIPn/TRINGn pins in the corresponding link are set to high impedance state. Besides, TTIPn/TRINGn will also be set to high impedance state by other ways (refer to Chapter 3.25 Line Driver for details).
RSD[1] / MRSDA[1] RSD[2] / MRSDB[1] RSD[3] RSD[4]	High-Z Output	P3 R2 T1 P1	**RSD[1:4]: Receive Side System Data for Link 1 ~ 4** The processed data stream is output on these pins. In Receive Clock Master mode, the RSDn pins are updated on the active edge of the corresponding RSCKn. In Receive Clock Slave mode, selected by the RSLVCK bit (b4, T1/J1-010H / b4, E1-010H), the RSDn pins are updated on the active edge of the corresponding RSCKn or all four RSDn pins are updated on the active edge of RSCK[1]. **MRSDA[1] / MRSDB[1]: Multiplexed Receive Side System Data A / B for Link 1 ~ 4** In Receive Multiplexed mode, the MRSDA[1] pin or the MRSDB[1] pin is used to output the processed data stream. Using a byte-interleaved multiplexing scheme, the MRSDA[1]/MRSDB[1] pins output the data from Link 1 to Link 4. The data on the MRSDA[1]/MRSDB[1] pin is updated on the active edge of the MRSCK. The data on MRSDA[1] is the same as the data on MRSDB[1]. MRSDB[1] is for back-up purpose.
RSIG[1] / MRSIGA[1] RSIG[2] / MRSIGB[1] RSIG[3] RSIG[4]	High-Z Output	T2 P2 R1 N3	**RSIG[1:4]: Receive Side System Signaling for Link 1 ~ 4** The extracted signaling bits are output on these pins. They are located in the lower nibble (b5 ~ b8) and are channel/timeslot-aligned with the data output on the corresponding RSDn pin. In Receive Clock Master mode, the RSIGn pins are updated on the active edge of the corresponding RSCKn. In Receive Clock Slave mode, selected by the RSLVCK bit (b4, T1/J1-010H / b4, E1-010H), the RSIGn pins are updated on the active edge of the corresponding RSCKn or all four RSIGn are updated on the active edge of RSCK[1]. **MRSIGA[1] / MRSIGB[1]: Multiplexed Receive Side System Signaling A / B for Link 1 ~ 4** In Receive Multiplexed mode, the MRSIGA[1] pin or the MRSIGB[1] pin is used to output the extracted signaling bits. The signaling bits are located in the lower nibble (b5 ~ b8) and are channel/timeslot-aligned with the data output on the corresponding MRSDA[1]/MRSDB[1] pins. Using the byte-interleaved multiplexing scheme, the MRSIGA[1]/MRSIGB[1] pins output the signaling bits from Link 1 to Link 4. The signaling bits on the MRSIGA[1]/MRSIGB[1] pin is updated on the active edge of the MRSCK. The signaling bits on MRSIGA[1] is the same as the signaling bits on MRSIGB[1]. MRSIGB[1] is for back-up purpose.

Note:

* The contents in the brackets indicate the position of the preceding bit and the address of the register. After the address, if the punctuation ',...' is followed, this bit is in a per-link control register and the listed address belongs to Link 1. Users can find the omitted addresses in Chapter 5. If there is no punctuation followed the address, this bit is in a global control register.

Name	Type	Pin No.	Description
RSFS[1] / MRSFS RSFS[2] RSFS[3] RSFS[4]	Output / Input	N5 R4 N4 R3	**RSFS[1:4]: Receive Side System Frame Pulse for Link 1 ~ 4** In T1/J1 Receive Clock Master mode, RSFSn outputs the pulse to indicate each F-bit, every second F-bit in SF frame, the first F-bit of every SF/ESF/T1 DM/SLC-96 multi-frame or the first F-bit of every second SF multi-frame. In T1/J1 Receive Clock Slave mode, RSFSn inputs the pulse at a rate of integer multiple of 125 μs to indicate the start of a frame. In E1 Receive Clock Master mode, RSFSn outputs the pulse to indicate the Basic frame, CRC Multi-frame, Signaling Multi-frame, or both the CRC Multi-frame and Signaling Multi-frame, or the TS1 and TS16 overhead. In E1 Receive Clock Slave mode, RSFSn inputs the pulse at a rate of integer multiple of 125 μs to indicate the start of a frame. RSFSn is updated/sampled on the active edge of the corresponding RSCKn. The active polarity of RSFSn is selected by the FSINV bit (b4, T1/J1-048H,... / b4, E1-048H,...). **MRSFS: Multiplexed Receive Side System Frame Pulse for Link 1 ~ 4** In Receive Multiplexed mode, MRSFS inputs the pulse at a rate of integer multiple of 125 μs to indicate the start of a frame on the multiplexed data bus. MRSFS is sampled on the active edge of MRSCK. The active polarity of MRSFS is selected by the FSINV bit (b4, T1/J1-048H,... / b4, E1-048H,...). RSFS[1:4]/MRSFS are Schmitt-triggered inputs/outputs with pull-up resistors.
RSCK[1] / MRSCK RSCK[2] RSCK[3] RSCK[4]	Output / Input	P5 T4 P4 T3	**RSCK[1:4]: Receive Side System Clock for Link 1 ~ 4** In Receive Clock Master mode, the RSCKn pins output a (gapped) 1.544 MHz (for T1/J1 mode) / 2.048 MHz (for E1 mode) clock used to update the signal on the corresponding RSDn, RSIGn and RSFSn pins. In Receive Clock Slave mode, the RSCKn pins input a 1.544 MHz (for T1/J1 mode only), 2.048 MHz or 4.096 MHz clock used to update the signals on the corresponding RSDn and RSIGn pins and sample the signals on the corresponding RSFSn pins. Selected by the RSLVCK bit (b4, T1/J1-010H / b4, E1-010H), the RSCK[1] pin can be used for all four links. **MRSCK: Multiplexed Receive Side System Clock for Link 1 ~ 4** In Receive Multiplexed mode, MRSCK inputs a 8.192 MHz or 16.384 MHz clock used to update the signals on the corresponding MRSDA/MRSDB and MRSIGA/MRSIGB pins and sample the signal on the corresponding MRSFS pin. RSCK[1:4]/MRSCK are Schmitt-triggered inputs/outputs with pull-up resistors.
TSD[1] / MTSDA[1] TSD[2] / MTSDB[1] TSD[3] TSD[4]	Input	G2 F2 G3 F3	**TSD[1:4]: Transmit Side System Data for Link 1 ~ 4** The data stream from the system side is input on these pins. In Transmit Clock Master mode, the TSDn pins are sampled on the active edge of the corresponding TSCKn. In Transmit Clock Slave mode, selected by the TSLVCK bit (b1, T1/J1-010H / b1, E1-010H), the TSDn pins are sampled on the active edge of the corresponding TSCKn or all four TSDn pins are sampled on the active edge of TSCK[1]. **MTSDA[1] / MTSDB[1]: Multiplexed Transmit Side System Data A / B for Link 1 ~ 4** In Transmit Multiplexed mode, selected by the MTSDA bit (b2, T1/J1-010H / b2, E1-010H), the MTSDA[1] pin or the MTSDB[1] pin is used to input the data stream. Using a byte-interleaved multiplexing scheme, the MTSDA[1]/MTSDB[1] pins input the data for Link 1 to Link 4. The data on the MTSDA[1]/MTSDB[1] pins are sampled on the active edge of MTSCK. TSD[1:4]/MTSDA[1]/MTSDB[1] are Schmitt-triggered inputs.

Name	Type	Pin No.	Description
TSIG[1] / MTSIGA[1] TSIG[2] / MTSIGB[1] TSIG[3] TSIG[4]	Input	F1 E1 G4 F4	**TSIG[1:4]: Transmit Side System Signaling for Link 1 ~ 4** The signaling bits are input on these pins. They are located in the lower nibble (b5 ~ b8) and are channel/timeslot-aligned with the data input on the corresponding TSDn pin. In Transmit Clock Master mode, TSIGn is sampled on the active edge of the corresponding TSCKn. In Transmit Clock Slave mode, selected by the TSLVCK bit (b1, T1/J1-010H / b1, E1-010H), TSIGn is sampled on the active edge of the corresponding TSCKn or all four TSIGn are updated on the active edge of TSCK[1]. **MTSIGA[1] / MTSIGB[1]: Multiplexed Transmit Side System Signaling A / B for Link 1 ~ 4** In Transmit Multiplexed mode, selected by the MTSDA bit (b2, T1/J1-010H / b2, E1-010H), the MTSIGA[1] pin or the MTSIGB[1] pin is used to input the signaling bits. The signaling bits are located in the lower nibble (b5 ~ b8) and are channel/timeslot-aligned with the data input on the corresponding MTSDA[1]/MTSDB[1] pin. Using the byte-interleaved multiplexing scheme, the MTSIGA[1]/MTSIGB[1] pins input the signaling bits for Link 1 to Link 4. The signaling bits on the MTSIGA[1]/MTSIGB[1] pin is sampled on the active edge of MTSCK. TSIG[1:4]/MTSIGA[1]/MTSIGB[1] are Schmitt-triggered inputs.
TSFS[1] / MTSFS TSFS[2] TSFS[3] TSFS[4]	Output / Input	K2 J2 H1 G1	**TSFS[1:4]: Transmit Side System Frame Pulse for Link 1 ~ 4** In T1/J1 Transmit Clock Master mode, TSFSn outputs the pulse to indicate each F-bit or the first F-bit of every SF/ESF/T1 DM/SLC-96 multi-frame. In T1/J1 Transmit Clock Slave mode, TSFSn inputs the pulse to indicate each F-bit or the first F-bit of every SF/ESF/T1 DM/SLC-96 multi-frame. In E1 Transmit Clock Master mode, TSFSn outputs the pulse to indicate the Basic frame, CRC Multi-frame and/or Signaling Multi-frame. In E1 Transmit Clock Slave mode, TSFSn inputs the pulse to indicate the Basic frame, CRC Multi-frame and/or Signaling Multi-frame. TSFSn is updated/sampled on the active edge of the corresponding TSCKn. The active polarity of TSFSn is selected by the FSINV bit (b1, T1/J1-042H,... / b1, E1-042H,...). **MTSFS: Multiplexed Transmit Side System Frame Pulse for Link 1 ~ 4** In T1/J1 Transmit Multiplexed mode, MTSFS inputs the pulse to indicate each F-bit or the first F-bit of every SF/ESF/T1 DM/SLC-96 multi-frame of one link on the multiplexed data bus. In E1 Transmit Multiplexed mode, MTSFS inputs the pulse to indicate each Basic frame, CRC Multi-frame and/or Signaling Multi-frame of one link on the multiplexed data bus. MTSFS is sampled on the active edge of MTSCK. The active polarity of MTSFS is selected by the FSINV bit (b1, T1/J1-042H,... / b1, E1-042H,...). TSFS[1:4]/MTSFS are Schmitt-triggered inputs/outputs with pull-up resistors.
TSCK[1] / MTSCK TSCK[2] TSCK[3] TSCK[4]	Output / Input	L1 K1 J1 H2	**TSCK[1:4]: Transmit Side System Clock for Link 1 ~ 4** In Transmit Clock Master mode, TSCKn outputs a (gapped) 1.544 MHz (for T1/J1 mode) / 2.048 MHz (for E1 mode) clock used to sample the signal on the corresponding TSDn and TSIGn pins and update the signal on the corresponding TSFSn pin. In Transmit Clock Slave mode, TSCKn inputs a 1.544 MHz (for T1/J1 mode only), 2.048 MHz or 4.096 MHz clock used to sample the signal on the corresponding TSDn, TSIGn and TSFSn pins. Selected by the TSLVCK bit (b1, T1/J1-010H / b1, E1-010H), the TSCK[1] can be used for all four links. **MTSCK: Multiplexed Transmit Side System Clock for Link 1 ~ 4** In Transmit Multiplexed mode, MTSCK inputs a 8.192 MHz or 16.384 MHz clock used to sample the signal on the corresponding MTSDA/MTSDB, MTSIGA/MTSIGB and MTSFS pins. TSCK[1:4]/MTSCK are Schmitt-triggered inputs/outputs with pull-up resistors.
Clock Generator			

Name	Type	Pin No.	Description
OSCI	Input	B13	**OSCI: Crystal Oscillator Input** This pin is connected to an external clock source. The clock frequency of OSCI is defined by CLK_SEL[2:0]. The clock accuracy should be ±32 ppm and duty cycle should be from 40% to 60%.
OSCO	Output	C13	**OSCO: Crystal Oscillator Output** This pin outputs the inverted, buffered clock input from OSCI.
CLK_SEL[0] CLK_SEL[1] CLK_SEL[2]	Input	D15 C14 B15	**CLK_SEL[2:0]: Clock Selection** These three pins select the input clock signal: When the CLK_SEL[2] pin is low, the input clock signal is N X 1.544 MHz; when the CLK_SEL[2] pin is high, the input clock signal is N X 2.048 MHz. When the CLK_SEL[1:0] pins are '00', the N is 1; when the CLK_SEL[1:0] pins are '01', the N is 2; when the CLK_SEL[1:0] pins are '10', the N is 3; when the CLK_SEL[1:0] pins are '11', the N is 4. CLK_SEL[2:0] are Schmitt-trigger inputs.
CLK_GEN_1.544	Output	A16	**CLK_GEN_1.544: Clock Generator 1.544 MHz Output** This pin outputs the 1.544 MHz clock signal generated by the Clock Generator.
CLK_GEN_2.048	Output	D14	**CLK_GEN_2.048: Clock Generator 2.048 MHz Output** This pin outputs the 2.048 MHz clock signal generated by the Clock Generator.
REFA_OUT	Output	A15	**REFA_OUT: Reference Clock Output A** When no LOS is detected, this pin outputs a recovered clock from the Clock and Data Recovery function block of one of the four links. The link is selected by the RO1[1:0] bits (b1~0, T1/J1-007H / b1~0, E1-007H). When LOS is detected, this pin outputs MCLK or high level, as selected by the REFH_LOS bit (b0, T1/J1-03EH,... / b0, E1-03EH,...). *
REFB_OUT	Output	B14	**REFB_OUT: Reference Clock Output B** When no LOS is detected, this pin outputs a recovered clock from the Clock and Data Recovery function block of one of the four links. The link is selected by the RO2[1:0] bits (b4~3, T1/J1-007H / b4~3, E1-007H). When LOS is detected, this pin outputs MCLK or high level, as selected by the REFH_LOS bit (b0, T1/J1-03EH,... / b0, E1-03EH,...). *
Control Interface			
$\overline{\text{RESET}}$	Input	A14	**$\overline{\text{RESET}}$: Reset (Active Low)** A low pulse for more than 100 ns on this pin resets the device. All the registers are accessible 2 ms after the reset. The $\overline{\text{RESET}}$ pin is a Schmitt-trigger input with a weak pull-up resistor.
GPIO[0] GPIO[1]	Output / Input	E13 D13	**General Purpose I/O [1:0]** These two pins can be defined as input pins or output pins by the DIR[1:0] bits (b1~0, T1/J1-006H / b1~0, E1-006H) respectively. When the pins are input, their polarities are indicated by the LEVEL[1:0] bits (b3~2, T1/J1-006H / b3~2, E1-006H) respectively. When the pins are output, their polarities are controlled by the LEVEL[1:0] bits (b3~2, T1/J1-006H / b3~2, E1-006H) respectively. GPIO[1:0] are Schmitt-trigger input/output with a pull-up resistor.
THZ	Input	B16	**THZ: Transmit High-Z** A high level on this pin puts all the TTIPn/TRINGn pins into high impedance state. THZ is a Schmitt-trigger input.
$\overline{\text{INT}}$	Output	T11	**$\overline{\text{INT}}$: Interrupt (Active Low)** This is the open drain, active low interrupt output. This pin will stay low until all the active unmasked interrupt indication bits are cleared.
REFR	Output	C16	**REFR:** This pin should be connected to ground via an external 10K resistor.

Note:
* This feature is available in ZB revistion only.

Name	Type	Pin No.	Description
$\overline{CS}$	Input	N10	**$\overline{CS}$: Chip Select (Active Low)** This pin must be asserted low to enable the microprocessor interface. The signal must be asserted high at least once after power up to clear the internal test modes. A transition from high to low must occur on this pin for each Read/Write operation and can not return to high until the operation is completed. $\overline{CS}$ is a Schmitt-trigger input.
A[0] A[1] A[2] A[3] A[4] A[5] A[6] A[7] A[8] A[9]	Input	R5 T5 N6 P6 R6 T6 N7 P7 R7 T7	**A[9:0]: Address Bus** In parallel mode, the signals on these pins select the register for the microprocessor to access. In SPI mode, these pins should be connected to ground. A[9:0] are Schmitt-trigger inputs.
D[0] / SDO D[1] D[2] D[3] D[4] D[5] D[6] D[7]	Output / Input	T10 N9 P9 R9 T9 T8 R8 P8	**D[7:0]: Bi-directional Data Bus** In parallel mode, the signals on these pins are the data for Read / Write operation. In SPI mode, the D[7:1] pins should be connected to the ground through a 10 K resistor. D[7:0] are Schmitt-trigger inputs/outputs. **SDO: Serial Data Output** In SPI mode, the data is serially output on this pin.
MPM	Input	P11	**MPM: Micro Controller Mode** In parallel mode, set this pin low for Motorola mode or high for Intel mode. In SPI mode, set this pin to a fixed level (high or low). This pin is useless in SPI mode. MPM is a Schmitt-trigger input.
R$\overline{W}$ / $\overline{WR}$ / SDI	Input	P10	**R$\overline{W}$: Read / Write Select** In parallel Motorola mode, this pin is active high for read operation and active low for write operation. **$\overline{WR}$: Write Strobe (Active Low)** In parallel Intel mode, this pin is active low for write operation. **SDI: Serial Data Input** In SPI mode, the address/control and/or data are serially input on this pin. R$\overline{W}$ / $\overline{WR}$ / SDI is a Schmitt-trigger input.
$\overline{DS}$ / $\overline{RD}$ / SCLK	Input	R10	**$\overline{DS}$: Data Strobe (Active Low)** In parallel Motorola mode, this pin is active low. **$\overline{RD}$: Read Strobe (Active Low)** In parallel Intel mode, this pin is active low for read operation. **SCLK: Serial Clock** In SPI mode, this pin inputs the timing for the SDO and SDI pins. The signal on the SDO pin is updated on the falling edge of SCLK, while the signal on the SDI pin is sampled on the rising edge of SCLK. $\overline{DS}$ / $\overline{RD}$ / SCLK is a Schmitt-trigger input.
SPIEN	Input	R11	**SPIEN: Serial Microprocessor Interface Enable** When this pin is low, the microprocessor interface is in parallel mode. When this pin is high, the microprocessor interface is in SPI mode. SPIEN is a Schmitt-trigger input.
JTAG (per IEEE 1149.1)			

Name	Type	Pin No.	Description
$\overline{\text{TRST}}$	Input	N12	**$\overline{\text{TRST}}$: Test Reset (Active Low)** A low signal on this pin resets the JTAG test port. This pin is a Schmitt-triggered input with an internal pull-up resistor. It must be connected to the $\overline{\text{RESET}}$ pin or ground when JTAG is not used.
TMS	Input	R14	**TMS: Test Mode Select** The signal on this pin controls the JTAG test performance and is sampled on the rising edge of TCK. This pin is a Schmitt-triggered input with an internal pull-up resistor.
TCK	Input	T14	**TCK: Test Clock** The clock for the JTAG test is input on this pin. TDI and TMS are sampled on the rising edge of TCK and TDO is clocked out of the device on the falling edge of TCK. This pin is a Schmitt-triggered input with an internal pull-up resistor.
TDI	Input	R13	**TDI: Test Input** The test data is sampled at this pin on the rising edge of TCK. This pin is a Schmitt-triggered input with an internal pull-up resistor.
TDO	High-Z	T13	**TDO: Test Output** The test data are output on this pin. It is updated on the falling edge of TCK. This pin is High-Z except during the process of data scanning.
Power & Ground			
VDDDIO	Power	E14 E15 G16 H14 H15 J15 K15 M15 M16 N16 P16 R15	**VDDDIO: 3.3 V I/O Power Supply**
VDDDC	Power	H7 H8 J7 J8 J9 J10 K7 K8 K9 K10	**VDDDC: 1.8 V Digital Core Power Supply**
VDDAR[1] VDDAR[2] VDDAR[3] VDDAR[4]	Power	A10 C9 A5 A4	**VDDAR[8:1]: 3.3 V Power Supply for Receiver**
VDDAT[1] VDDAT[2] VDDAT[3] VDDAT[4]	Power	B12 B9 B5 A3	**VDDAT[8:1]: 3.3 V Power Supply for Transmitter**
VDDAX[1] VDDAX[2] VDDAX[3] VDDAX[4]	Power	C12 B8 B7 B2	**VDDAX[8:1]: 3.3 V Power Supply for Transmit Driver**

Name	Type	Pin No.	Description
VDDAP	Power	A13	**VDDAP: 3.3 V Power Analog PLL**
VDDAB	Power	D12	**VDDAB: 3.3 V Power Analog Bias**
GNDA	Ground	B3 B6 B10 B11 C3 C5 C6 C7 C8 C10 D3 D4 D7 D10	**GNDA: Analog Ground**
GNDD	Ground	F13 F15 G7 G8 G9 G10 G13 G15 H9 H10 J14 K13 K14 L14 L15 M14 N13 P13 P14 P15	**GNDD: Digital Ground**
TEST			
IC	-	C15 D16 N11 P12 T12	**IC: Internal Connected** These pins are for IDT use only and should be connected to ground.
Others			

Name	Type	Pin No.	Description
NC	-	B1, C1, C2, D1, D2, E2, E3, E4, E16, F14, F16, G14, H3, H4, H13, H16, J3, J4, J13, J16, K3, K4, K16, L2, L3, L4, L13, L16, M1, M2, M3, M4, M13, N1, N2, N8, N14, N15, R12, R16, T15, T16	**NC: Not Connected**

3 FUNCTIONAL DESCRIPTION

The IDT82P2284 is a highly featured single device solution for T1/E1/J1 trunks. Each link of the IDT82P2284 can be independently configured. The configuration is performed through an SPI or parallel microprocessor interface.

LINE INTERFACE - RECEIVE PATH

In the receive path, the signals from the line side are coupled into the RTIPn and RRINGn pins and pass through an Impedance Terminator. An Adaptive Equalizer is provided to increase the sensitivity for small signals. Clock and data are recovered from the digital pulses output from the slicer. After passing through the Receive Jitter Attenuator (can be enabled or disabled), the recovered data is decoded using B8ZS (for T1/J1) / HDB3 (for E1) or AMI line code rules and clocked into the Frame Processor. Loss of signal, line code violations and excessive zero are detected.

FRAMER - RECEIVE PATH

In T1/J1 Mode, the recovered data and clock of each link can be configured in Super Frame (SF), Extended Super Frame (ESF), T1 Digital Multiplexer (DM) or Switch Line Carrier - 96 (SLC-96) formats. (The T1 DM and SLC-96 formats only exist in T1 mode). The framing can also be bypassed (unframed mode). The Framer detects and indicates the out of SF/ESF/DM/SLC-96 synchronization event, the Yellow, Red and AIS alarms. The Framer also detects the presence of inband loopback codes and bit-oriented messages. Frame Alignment Signal errors, CRC-6 errors, out of SF/ESF/T1 DM/SLC-96 events and Frame Alignment position changes are counted. Up to three HDLC links (in ESF and T1 DM format) or two HDLC links (in SF and SLC-96 format) are provided to extract the HDLC message on the DL bit (in ESF format) / D bit in CH24 (in T1 DM format) or any arbitrary position. In the T1/J1 receive path, signaling debounce, signaling freeze, idle code substitution, digital milliwatt code insertion, idle code insertion, data inversion and pattern generation or detection are supported on a per-channel basis. An Elastic Store Buffer that supports controlled slip and adaptation to backplane timing may be enabled. In the Receive System Interface, various operating modes can be selected to output signals to the system.

In E1 Mode, the recovered data and clock of each link can be configured to frame to Basic Frame, CRC Multi-Frame and Signaling Multi-Frame. The framing can be bypassed (unframed mode). The Framer detects and indicates the following event: out of Basic Frame Sync, out of CRC Multi-Frame, out of Signaling Multi-Frame, Remote Alarm Indication signal and Remote Signaling Multi-Frame Alarm Indication signal. The Framer also monitors Red and AIS alarms. Basic Frame Alignment Signal errors, Far End Block Errors (FEBE) and CRC errors are counted. Up to three HDLC links are provided to extract the HDLC message on TS16, the Sa National bits or any arbitrary timeslot. In the E1 receive path, signaling debounce, signaling freezing, idle code substitution, digital milliwatt code insertion, trunk conditioning, data inversion and pattern generation or detection are also supported on a per-timeslot basis. An Elastic Store Buffer that supports slip buffering and adaptation to backplane timing may be enabled. In the Receive System Interface, various operating modes can be selected to output signals to the system.

SYSTEM INTERFACE

On the system side, if the device is in T1/J1 mode, the data stream of 1.544 Mbit/s can be converted to/from the data stream of 2.048 Mbit/s by software configuration. In addition, the four links can be grouped into one set. The set can be multiplexed to or de-multiplexed from one of the two 8.192 Mbit/s buses. If the device is in E1 mode, the four links can be multiplexed to or de-multiplexed from one of the two 8.192 Mbit/s buses.

FRAMER - TRANSMIT PATH

In the transmit path, the Transmit System Interface inputs the signals with various operating modes. In T1/J1 mode, the signals can be processed by a Transmit Payload Control to execute the signaling insertion, idle code substitution, data insertion, data inversion and test pattern generation or detection on a per-channel basis. The transmit path of each transceiver can be configured to generate SF, ESF, T1 DM or SLC-96. The framer can also be disabled (unframed mode). The Framer can transmit Yellow alarm and AIS alarm. Inband loopback codes and bit oriented message can be transmitted. Up to three HDLC links (in ESF and T1 DM format) or two HDLC links (in SF and SLC-96 format) are provided to insert the HDLC message on the DL bit (in ESF format) / D bit in CH24 (in T1 DM format) or any arbitrary position. After passing through a Transmit Buffer, the processed data and clock are input to the Encoder.

In E1 mode, the signals can be processed by a Transmit Payload Control to execute the signaling insertion, idle code substitution, data insertion, data inversion and test pattern generation or detection on a per-timeslot basis. The transmit path of each transceiver can be configured to generate Basic Frame, CRC Multi-Frame and Signaling Multi-Frame. The framer can be disabled (unframed mode). The Framer can transmit Remote Alarm Indication signal, the Remote Signaling Multi-Frame Alarm Indication signal, AIS alarm and FEBE. Three HDLC links are provided to insert the HDLC message on TS16, the Sa National bits or any arbitrary timeslot. The processed data and clock are input to the Encoder.

LINE INTERFACE - TRANSMIT PATH

The data is encoded using AMI or B8ZS (for T1/J1) and HDB3 (for E1) line code rules. The Transmit Jitter Attenuator, if enabled, is provided with a FIFO in the transmit data path. A de-jittered clock is generated by an integrated digital phase-locked loop and is used to read data from the FIFO. The shapes of the pulses are user programmable to ensure that the T1/E1/J1 pulse template is met after the signal passing through different cable lengths and types. Bipolar violation can be inserted for diagnostic purposes if AMI line code rule is enabled. The signal is transmitted on the TTIPn and TRINGn pins through an Impedance Terminator.

TEST AND DIAGNOSES

To facilitate the testing and diagnostic functions, Analog Loopback, Remote Digital Loopback, Remote Loopback, Local Digital Loopback, Payload Loopback and System Loopback are also integrated in the IDT82P2284. A programmable pseudo random bit sequence can be generated in receive/transmit direction and detected in the opposite direction for testing purpose.

The G.772 Non-intrusive monitoring and JTAG are also supported by the IDT82P2284.

3.1 T1 / E1 / J1 MODE SELECTION

Each link in the IDT82P2284 can be configured as a duplex T1 transceiver, or a duplex E1 transceiver, or a duplex J1 transceiver. When it is in T1 mode, Super Frame (SF), Extended Super Frame (ESF), T1 Digital Multiplexer (T1 DM) and Switch Line Carrier - 96 (SLC-96) framing formats can be selected. When it is in J1 mode, Super Frame (SF) and Extended Super Frame (ESF) formats can be selected. All the selections are made by the TEMODE bit, the T1/J1 bit and the FM[1:0] bits as shown in Table 1.

Table 1: Operating Mode Selection

TEMODE	T1/J1	FM[1:0]	Operating Mode
1	0	0 0	T1 mode SF format
		0 1	T1 mode ESF format
		1 0	T1 mode T1 DM format
		1 1	T1 mode SLC-96 format
	1	0 0	J1 mode SF format
		0 1	J1 mode ESF format
0	X	X	E1 mode

Table 2: Related Bit / Register In Chapter 3.1

Bit	Register	Address (Hex)
TEMODE	T1/J1 Or E1 Mode	020, 120, 220, 320
T1/J1		
FM[1:0]		

3.2 RECEIVER IMPEDANCE MATCHING

The receiver impedance matching can be realized by using internal impedance matching circuit or external impedance matching circuit.

When the R_TERM[2] bit is '0', the internal impedance matching circuit is enabled. 100 Ω, 110 Ω, 75 Ω or 120 Ω internal impedance matching circuit can be selected by the R_TERM[1:0] bits.

When the R_TERM[2] bit is '1', the internal impedance matching circuit is disabled, and different external resistors should be used to realize different impedance matching.

Figure 2 shows the appropriate components to connect with the cable for one link. Table 3 lists the recommended impedance matching value for the receiver.

Table 3: Impedance Matching Value For The Receiver

Cable Configuration	Internal Termination		External Termination	
	R_TERM[2:0]	R_R	R_TERM[2:0]	R_R
75 Ω (E1)	0 0 0	120 Ω	1 X X	75 Ω
120 Ω (E1)	0 0 1			120 Ω
100 Ω (T1)	0 1 0			100 Ω
110 Ω (J1)	0 1 1			110 Ω

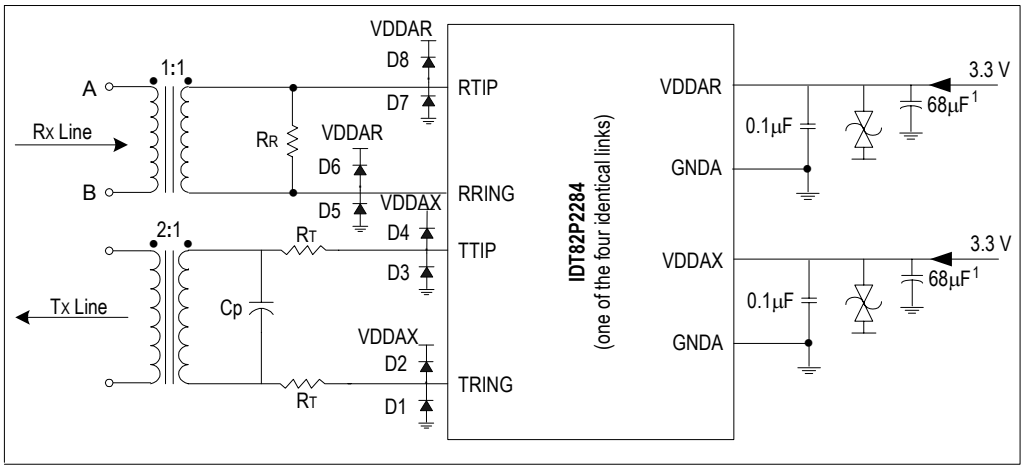

Note: 1. Common decoupling capacitor
2. Cp 0-560 (pF)
3. D1 - D8, Motorola - MBR0540T1; International Rectifier - 11DQ04 or 10BQ060

Figure 2. Receive / Transmit Line Circuit

In short haul applications, after the data stream passes through the receive internal impedance circuitry, the non-intrusive monitoring can be performed between two devices. The monitored link of one device is in normal operation, and the monitoring link of the other device taps the monitored one through a high impedance bridging circuit (refer to Figure 3 and Figure 4). Because of the high resistance bridging circuit, the signal arriving at the RTIPn/RRINGn of the monitoring link is dramatically attenuated. To compensate this attenuation, the Monitor Gain can be used to boost the signal by 22 dB, 26 dB and 32 dB selected by the MG[1:0] bits. For normal operation, the Monitor Gain should be set to 0 dB, i.e. the Monitor Gain of the monitored link should be 0 dB.

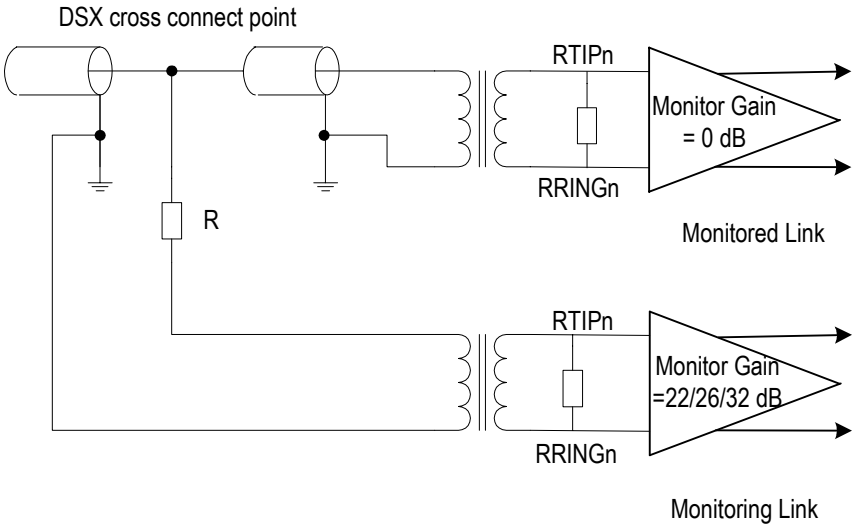

Figure 3. Monitoring Receive Path

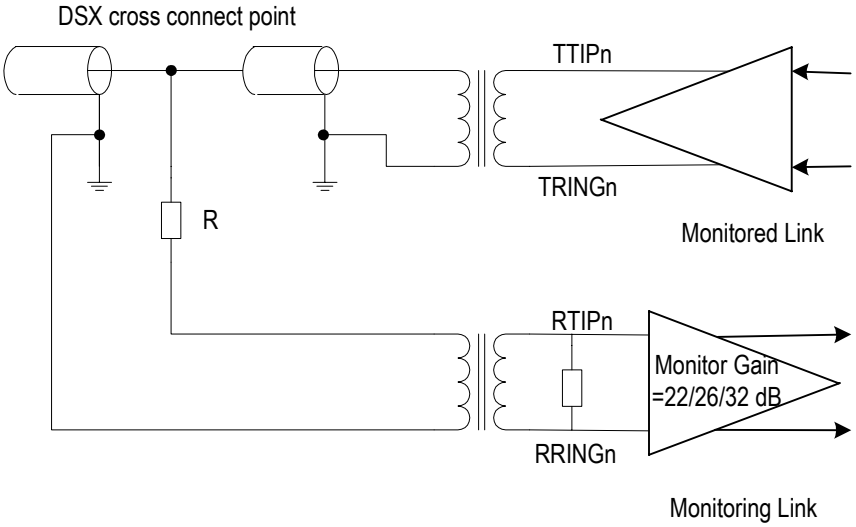

Figure 4. Monitoring Transmit Path

Table 4: Related Bit / Register In Chapter 3.2

Bit	Register	Address (Hex)
R_TERM[2:0]	Transmit And Receive Termination Configuration	032, 132, 232, 332
MG[1:0]	Receive Configuration 2	02A, 12A, 22A, 32A

3.3 ADAPTIVE EQUALIZER

The Adaptive Equalizer can remove most of the signal distortion due to intersymbol interference caused by cable attenuation and distortion. Usually, the Adaptive Equalizer is off in short haul applications and is on in long haul applications, which is configured by the EQ_ON bit.

The peak detector keeps on measuring the peak value of the incoming signals during a selectable observation period. The observation period is selected by the UPDW[1:0] bits. A shorter observation period allows quicker response to pulse amplitude variation, while a longer observation period can minimize the possible overshoots.

Based on the observed peak value for a period, the equalizer will be adjusted to achieve a normalized signal. The LATT[4:0] bits indicate the signal attenuation introduced by the cable in approximately 2 dB per step.

In short haul application, the receive sensitivity is -10 dB in both T1/J1 and E1 modes. In long haul application, the receive sensitivity is -36 dB in T1/J1 mode or -43 dB in E1 mode.

3.4 DATA SLICER

The Data Slicer is used to generate a standard amplitude mark or a space according to the amplitude of the input signals. The criteria of mark or space generation are based on a selected ratio of the incoming signal amplitude against the peak value detected during the observation period. This ratio is selected by the SLICE[1:0] bits. The output of the Data Slicer is forwarded to the Clock and Data Recovery unit.

Table 5: Related Bit / Register In Chapter 3.3 & Chapter 3.4

Bit	Register	Address (Hex)
EQ_ON	Receive Configuration 1	029, 129, 229, 329
UPDW[1:0]	Receive Configuration 2	02A, 12A, 22A, 32A
SLICE[1:0]		
LATT[4:0]	Line Status Register 1	037, 137, 237, 337

3.5 CLOCK AND DATA RECOVERY

The Clock and Data Recovery is used to recover the clock signal from the received data. It is accomplished by Digital Phase Locked Loop (DPLL). The recovered clock tracks the jitter in the data output from the Data Slicer and keeps the phase relationship between data and clock during the absence of the incoming pulse.

3.6 RECEIVE JITTER ATTENUATOR

The Receive Jitter Attenuator of each link can be chosen to be used or not. This selection is made by the RJA_E bit.

The Jitter Attenuator consists of a FIFO and a DPLL, as shown in Figure 5.

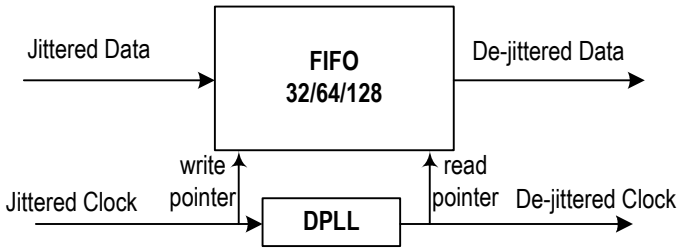

Figure 5. Jitter Attenuator

The FIFO is used as a pool to buffer the jittered input data, then the data is clocked out of the FIFO by a de-jittered clock. The depth of the FIFO can be 32 bits, 64 bits or 128 bits, as selected by the RJA_DP[1:0] bits. Accordingly, the constant delay produced by the Jitter Attenuator is 16 bits, 32 bits or 64 bits. The 128-bit FIFO is used when large jitter tolerance is expected, while the 32-bit FIFO is used in delay sensitive applications.

The DPLL is used to generate a de-jittered clock to clock out the data stored in the FIFO. The DPLL can only attenuate the incoming jitter whose frequency is above Corner Frequency (CF). The jitter whose frequency is lower than the CF passes through the DPLL without any attenuation. In T1/J1 applications, the CF of the DPLL can be 5 Hz or 1.26 Hz, as selected by the RJA_BW bit. In E1 applications, the CF of the DPLL can be 6.77 Hz or 0.87 Hz, as selected by the RJA_BW bit. The lower the CF is, the longer time is needed to achieve synchronization.

If the incoming data moves faster than the outgoing data, the FIFO will overflow. If the incoming data moves slower than the outgoing data, the FIFO will underflow. The overflow or underflow is captured by the RJA_IS bit. When the RJA_IS bit is ‘1’, an interrupt will be reported on the $\overline{\text{INT}}$ pin if enabled by the RJA_IE bit.

To avoid overflow or underflow, the JA-Limit function can be enabled by setting the RJA_LIMT bit. When the JA-Limit function is enabled, the speed of the outgoing data will be adjusted automatically if the FIFO is close to its full or emptiness. The criteria of speed adjustment start are listed in Table 6. Though the JA-Limit function can reduce the possibility of FIFO overflow and underflow, the quality of jitter attenuation is deteriorated.

Table 6: Criteria Of Speed Adjustment Start

FIFO Depth	Criteria Of Speed Adjustment Start
32 bits	2-bit close to full or empty
64 bits	3-bit close to full or empty
128 bits	4-bit close to full or empty

Selected by the RJITT_TEST bit, the real time interval between the read and write pointer of the FIFO or the peak-peak interval between the read and write pointer of the FIFO can be indicated in the RJITT[6:0] bits. When the RJITT_TEST bit is ‘0’, the current interval between the read and write pointer of the FIFO will be written into the RJITT[6:0] bits. When the RJITT_TEST bit is ‘1’, the current interval will be compared with the old one in the RJITT[6:0] bits and the larger one will be indicated by the RJITT[6:0] bits.

The performance of Receive Jitter Attenuator meets the ITU-T I.431, G.703, G.736 - 739, G.823, G.824, ETSI 300011, ETSI TBR 12/13, AT&T TR62411, TR43802, TR-TSY 009, TR-TSY 253, TR-TRY 499 standards. Refer to Chapter 7.10 Jitter Tolerance and Chapter 7.11 Jitter Transfer for details.

Table 7: Related Bit / Register In Chapter 3.6

Bit	Register	Address (Hex)
RJA_E	Receive Jitter Attenuation Configuration	027, 127, 227, 327
RJA_DP[1:0]		
RJA_BW		
RJA_LIMT		
RJITT_TEST		
RJA_IS	Interrupt Status 1	03B, 13B, 23B, 33B
RJA_IE	Interrupt Enable Control 1	034, 134, 234, 334
RJITT[6:0]	Receive Jitter Measure Value Indication	039, 139, 239, 339

3.7 DECODER

3.7.1 LINE CODE RULE

3.7.1.1 T1 / J1 Mode

In T1/J1 mode, the AMI and B8ZS line code rules are provided. The selection is made by the R_MD bit.

3.7.1.2 E1 Mode

In E1 mode, the AMI and HDB3 line code rules are provided. The selection is made by the R_MD bit.

3.7.2 DECODE ERROR DETECTION

3.7.2.1 T1 / J1 Mode

The decode errors can be divided into three types in T1/J1 mode:

1. Bipolar Violation (BPV) Error: When AMI line code rule is used, the BPV error will be detected if two consecutive pulses are received with the same polarity (refer to Figure 6). The event of the Bipolar Violation (BPV) Error is forwarded to the Performance Monitor.

2. B8ZS Code Violation (CV) Error: When B8ZS line code rule is used, a CV error is detected when the received code does not match the standard B8ZS line code pattern (expect the Excessive Zero error).

3. Excessive Zero (EXZ) Error: EXZ error can be detected in both AMI and B8ZS line code rules. There are two standards defining the EXZ error: ANSI and FCC. The EXZ_DEF bit chooses a standard for the corresponding link to judge the EXZ error. Table 8 shows the definition of EXZ. To count the event of the Excessive Zero (EXZ) Error, the EXZ_ERR[1:0] bits should be set to '01'. The Excessive Zero (EXZ) Error is counted in an internal 16-bit EXZ counter. The content in the EXZ counter is transferred to the EXZ Error Counter L-Byte & H-Byte registers in two ways:

a. When the CNT_MD bit is '0', the Manual-Report mode is selected. The EXZ counter transfers its content to the EXZ Error Counter L-Byte & H-Byte registers when there is a transition from '0' to '1' on the CNT_TRF bit;

b. When the CNT_MD bit is '1', the Auto-Report mode is selected. The EXZ counter transfers its content to the EXZ Error Counter L-Byte & H-Byte registers every one second automatically.

After the content in the counter is transferred to the EXZ Error Counter L-Byte & H-Byte registers, the counter will be cleared to '0' and start a new round counting automatically. No error event is lost during data transferring.

The overflow of the counter is reflected by the CNTOV_IS bit, and can trigger an interrupt if the corresponding CNT_IE bit is set.

When the Bipolar Violation (BPV) Error or the B8ZS Code Violation (CV) Error is detected, it will be indicated by the CV_IS bit. When the Excessive Zero (EXZ) Error is detected, it will be indicated by the EXZ_IS bit. When the CV_IS bit or the EXZ_IS bit is '1', an interrupt will be reported by the $\overline{\text{INT}}$ pin if enabled by the corresponding CV_IE bit or the EXZ_IE bit.

3.7.2.2 E1 Mode

The decode errors can be divided into three types in E1 mode:

1. Bipolar Violation (BPV) Error: When AMI line code rule is used, the BPV error will be detected if two consecutive pulses are received with the same polarity (refer to Figure 6). The event of the Bipolar Violation (BPV) Error is forwarded to the Performance Monitor.

2. HDB3 Code Violation (CV) Error: When HDB3 line code rule is used, a CV error is detected if two consecutive BPV errors are detected, and the pulses that have the same polarity as the previous pulse are not the HDB3 zero substitution pulsed (refer to Figure 8).

3. Excessive Zero (EXZ) Error: EXZ error can be detected in both AMI and HDB3 line code rules. There are two standards defining the EXZ error: ANSI and FCC. The EXZ_DEF bit chooses a standard for the corresponding link to judge the EXZ error. Table 8 shows the definition of EXZ. To count the event of the Excessive Zero (EXZ) Error, the EXZ_ERR[1:0] bits should be set to '01'. The Excessive Zero (EXZ) Error is counted in an internal 16-bit EXZ counter. The content in the EXZ counter is transferred to the EXZ Error Counter L-Byte & H-Byte registers in two ways:

a. When the CNT_MD bit is '0', the Manual-Report mode is selected. The EXZ counter transfers its content to the EXZ Error Counter L-Byte & H-Byte registers when there is a transition from '0' to '1' on the CNT_TRF bit;

b. When the CNT_MD bit is '1', the Auto-Report mode is selected. The EXZ counter transfers its content to the EXZ Error Counter L-Byte & H-Byte registers every one second automatically.

After the content in the counter is transferred to the EXZ Error Counter L-Byte & H-Byte registers, the counter will be cleared to '0' and start a new round counting automatically. No error event is lost during data transferring.

The overflow of the counter is reflected by the CNTOV_IS bit, and can trigger an interrupt if the corresponding CNT_IE bit is set.

When the Bipolar Violation (BPV) Error or the HDB3 Code Violation (CV) Error is detected, it will be indicated by the CV_IS bit. When the Excessive Zero (EXZ) Error is detected, it will be indicated by the EXZ_IS bit. When the CV_IS bit or the EXZ_IS bit is '1', an interrupt will be reported by the $\overline{\text{INT}}$ pin if enabled by the corresponding CV_IE bit or the EXZ_IE bit.

Table 8: Excessive Zero Error Definition

	ANSI	FCC
AMI	More than 15 consecutive 0s are detected.	More than 80 consecutive 0s are detected.
B8ZS	More than 7 consecutive 0s are detected (refer to Figure 7).	More than 7 consecutive 0s are detected (refer to Figure 7).
HDB3	More than 3 consecutive 0s are detected (refer to Figure 8).	More than 3 consecutive 0s are detected (refer to Figure 8).

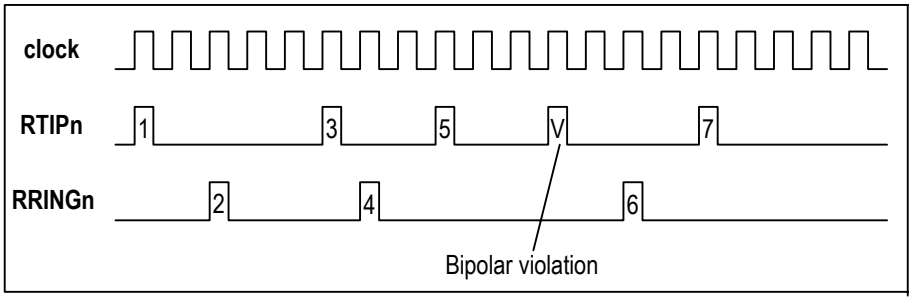

Figure 6. AMI Bipolar Violation Error

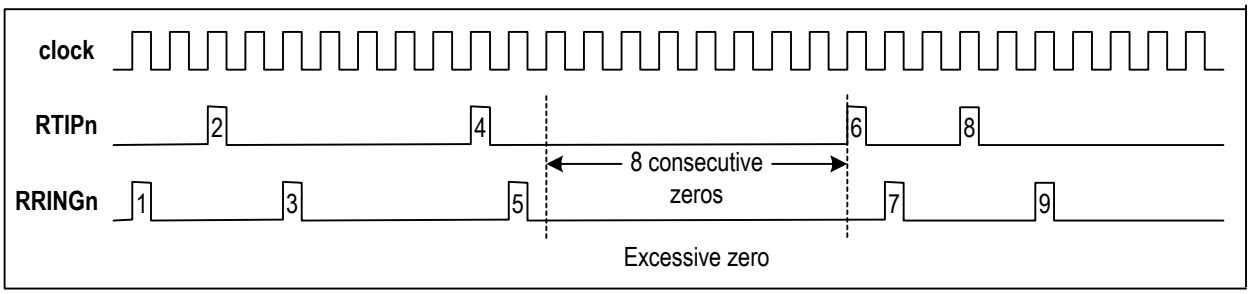

Figure 7. B8ZS Excessive Zero Error

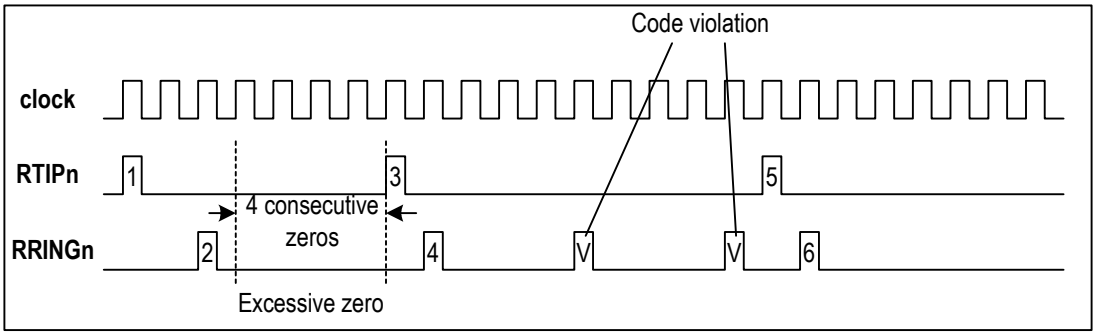

Figure 8. HDB3 Code Violation & Excessive Zero Error

3.7.3 LOS DETECTION

The Loss of Signal (LOS) Detector monitors the amplitude and density of the received signal. When the received signal is below an amplitude for continuous intervals, the LOS is detected. When the received signal is above the amplitude and the density of marks meets the requirement, the LOS is cleared.

The different criteria for LOS Declaring/Clearing are illustrated in Table 9 and Table 10. In T1/J1 mode, the LOS detection supports ANSI T1.231 and I.431. In E1 mode, the LOS detection supports ITU-T G.775 and I.431. The criteria are selected by the LAC bit.

When the LOS is detected, it will be indicated by the LOS_S bit. Selected by the LOS_IES bit, a transition from '0' to '1' on the LOS_S bit or any transition (from ‘0’ to ‘1’ or from ‘1’ to ‘0’) on the LOS_S bit will set the LOS_IS bit to ‘1’. When the LOS_IS bit is ‘1’, an interrupt will be reported by the $\overline{\text{INT}}$ pin if enabled by the LOS_IE bit.

During LOS, if the RAISE bit is set to ‘1’, all ’One’s will be inserted to the received data stream.

Table 9: LOS Condition In T1/J1 Mode

Loss of Signal in T1/J1 Mode		Short Haul Application		Long Haul Application	
		ANSI T1.231	I.431	ANSI T1.231	I.431
LOS Detected	Amplitude	below 800 mVpp	below 800 mVpp	below Q dB *	below Q dB *
	Continuous Intervals	175 bits	1544 bits	175 bits	1544 bits
LOS Cleared	Amplitude	above 1 Vpp	above 1 Vpp	above Q + 4 dB *	above Q + 4 dB *
	Mark Density	12.5% (16 marks in a hopping 128-bit window **) with less than 100 continuous zeros	12.5% (16 marks in a hopping 128-bit window **) with less than 100 continuous zeros	12.5% (16 marks in a hopping 128-bit window **) with less than 100 continuous zeros	12.5% (16 marks in a hopping 128-bit window **) with less than 100 continuous zeros

Note:
* The Q dB is set in the LOS[4:0] bits.
** A hopping 128-bit window means this: An entire 128 bits is taken from the data stream and is checked. If the criteria are not met, all the 128 bits are thrown and another 128 bits are caught for checking.

Table 10: LOS Condition In E1 Mode

Loss of Signal in E1 Mode		Short Haul Application		Long Haul Application	
		G.775	I.431	G.775	I.431
LOS Detected	Amplitude	below 800 mVpp	below 800 mVpp	below Q dB *	below Q dB *
	Continuous Intervals	32 bits	2048 bits	32 bits	2048 bits
LOS Cleared	Amplitude	above 1 Vpp	above 1 Vpp	above Q + 4 dB *	above Q + 4 dB *
	Mark Density	12.5% (4 marks in a hopping 32-bit window **) with less than 16 continuous zeros	12.5% (4 marks in a hopping 32-bit window **) with less than 16 continuous zeros	12.5% (4 marks in a hopping 32-bit window **) with less than 16 continuous zeros	12.5% (4 marks in a hopping 32-bit window **) with less than 16 continuous zeros

Note:
* The Q dB is set in the LOS[4:0] bits.
** A hopping 32-bit window means this: An entire 32 bits is taken from the data stream and is checked. If the criteria are not met, all the 32 bits are thrown and another 32 bits are caught for checking.

Table 11: Related Bit / Register In Chapter 3.7

Bit	Register	Address (Hex)
R_MD	Receive Configuration 0	028, 128, 228, 328
EXZ_ERR	Maintenance Function Control 2	031, 131, 231, 331
EXZ_DEF		
CNT_MD		
CNT_TRF		
CNTL[7:0]	EXZ Error Counter L-Byte	03D, 13D, 23D, 33D
CNTH[7:0]	EXZ Error Counter H-Byte	03C, 13C, 23C, 33C
CV_IS	Interrupt Status 1	03B, 13B, 23B, 33B
EXZ_IS		
CNTOV_IS		
CV_IE	Interrupt Enable Control 1	034, 134, 234, 334
EXZ_IE		
CNT_IE		
LAC	Maintenance Function Control 1	02C, 12C, 22C, 32C
RAISE		
LOS_S	Line Status Register 0	036, 136, 236, 336
LOS_IES	Interrupt Trigger Edges Select	035, 135, 235, 335
LOS_IS	Interrupt Status 0	03A, 13A, 23A, 33A
LOS_IE	Interrupt Enable Control 0	033, 133, 233, 333
LOS[4:0]	Receive Configuration 1	029, 129, 229, 329

3.8 FRAME PROCESSOR

3.8.1 T1/J1 MODE

In T1/J1 mode, the Frame Processor searches for the frame alignment patterns in the standard Super-Frame (SF), Extended Super-Frame (ESF), T1 Digital Multiplexer (DM) or Switch Line Carrier - 96 (SLC-96) framing formats. The T1 DM and SLC-96 formats are only supported in T1 mode. The Frame Processor acquires frame alignment per ITU-T requirement.

When frame alignment is achieved, the Framer Processor continues to monitor the received data stream. The Frame Processor will declare framing bit errors or bit error events if any. The Frame Processor can also detect out-of-frame events based on selected criteria.

The Frame Processor can also be bypassed by setting the UNFM bit.

3.8.1.1 Synchronization Searching

3.8.1.1.1 Super Frame (SF) Format

The structure of T1/J1 SF is illustrated in Table 12. The SF is made up of 12 frames. Each frame consists of one overhead bit (F-bit) and 24 8-bit channels. Its Frame Alignment Pattern is ‘100011011100’ for T1 and ‘10001101110X’ for J1 located in the F-bit position. The same pattern is a mimic pattern if it is received in the data stream other than F-bit. The synchronization criteria of SF format is selected by the MIMICC bit. When the MIMICC bit is set to ‘1’, the SF synchronization is acquired if two consecutive Frame Alignment Patterns are received error free in the data stream without a mimic pattern. When the MIMICC bit is set to ‘0’, the SF synchronization is acquired if two consecutive Frame Alignment Patterns are received error free in the data stream. In this case, the existence of mimic patterns is ignored. If a mimic pattern exists during the frame searching procedure, the MIMICI bit will be set to indicate the presence of a mimic pattern.

The SF synchronization is indicated by ‘0’ in the OOFV bit. The RMFBI bit is set at the first bit of each SF frame.

Table 12: The Structure of SF

Frame No. In The SF	F-Bit (Frame Alignment)		The Bit In Each Channel	
	Ft	Fs	Data Bit	Signaling Bit
1	1		1 - 8	-
2		0	1 - 8	-
3	0		1 - 8	-
4		0	1 - 8	-
5	1		1 - 8	-
6		1	1 - 7	A (bit 8)
7	0		1 - 8	-
8		1	1 - 8	-
9	1		1 - 8	-
10		1	1 - 8	-
11	0		1 - 8	-
12		X	1 - 7	B (bit 8)

Note:
‘X’ should be logic 0 in T1 FAS.
‘X’ can be logic 0 or 1 in J1 FAS because this position is used as Yellow Alarm Indication bit.

3.8.1.1.2 Extended Super Frame (ESF) Format

The structure of T1/J1 ESF is illustrated in Table 13. The ESF is made up of 24 frames. Each frame consists of one overhead bit (F-bit) and 24 8-bit channels. The F-bit in Frame (4n) (0<n<7) is for Frame Alignment; the F-bit in Frame (2n-1) (0<n<13) is for Data Link; and the F-bit in Frame (4n-2) (0<n<7) is for CRC checking.

The Frame Alignment Pattern is '001011', which is located in Frame (4n) (0<n<7). The same pattern is a mimic pattern if it is received in the data stream other than F-bit. The synchronization criteria of ESF format is selected by the MIMICC bit. When the MIMICC bit is set to '1', the ESF synchronization is acquired if four consecutive Frame Alignment Patterns are detected error free in the received data stream without a mimic pattern. When the MIMICC bit is set to '0', the ESF synchronization is acquired if a single correct Frame Alignment Pattern and a single correct CRC-6 based on this correct Frame Alignment Pattern are found. In this case, the existence of mimic patterns is ignored. If a mimic pattern exists during the frame searching procedure, the MIMICI bit will be set to indicate the presence of a mimic pattern.

The ESF synchronization is indicated by '0' in the OOFV bit. The RMFBI bit is set at the first bit of each ESF frame.

Table 13: The Structure of ESF

Frame No. In The ESF	F-Bit Assignment			The Bit In Each Channel	
	Frame Alignment	Data Link	CRC	Data Bit	Signaling Bit
1	-	DL	-	1 - 8	-
2	-	-	C1	1 - 8	-
3	-	DL	-	1 - 8	-
4	0	-	-	1 - 8	-
5	-	DL	-	1 - 8	-
6	-	-	C2	1 - 7	A (bit 8)
7	-	DL	-	1 - 8	-
8	0	-	-	1 - 8	-
9	-	DL	-	1 - 8	-
10	-	-	C3	1 - 8	-
11	-	DL	-	1 - 8	-
12	1	-	-	1 - 7	B (bit 8)
13	-	DL	-	1 - 8	-
14	-	-	C4	1 - 8	-
15	-	DL	-	1 - 8	-
16	0	-	-	1 - 8	-
17	-	DL	-	1 - 8	-
18	-	-	C5	1 - 7	C (bit 8)
19	-	DL	-	1 - 8	-
20	1	-	-	1 - 8	-
21	-	DL	-	1 - 8	-
22	-	-	C6	1 - 8	-
23	-	DL	-	1 - 8	-
24	1	-	-	1 - 7	D (bit 8)

3.8.1.1.3 T1 Digital Multiplexer (DM) Format (T1 only)

The structure of T1 DM is illustrated in Table 14. The T1 DM is made up of 12 frames. Each frame consists of one overhead bit (F-bit) and 24 8-bit channels. Except for channel 24, all other channels carry data. Channel 24 should be '0DY11101'. Its Frame Alignment Pattern is '100011011100' in the F-bit. The fixed 6 bits in channel 24 are called DDS.

The synchronization criteria of T1 DM format are selected by the DDSC bit. When the DDSC bit is '0', the T1 DM synchronization is acquired if one correct DDS pattern is received before the first F-bit of a single correct Frame Alignment Pattern. When the DDSC bit is '1', the T1 DM synchronization is acquired if a single correct Frame Alignment Pattern is received and twelve correct DDS patterns before each F-bit of the correct Frame Alignment Pattern are all detected.

The T1-DM synchronization is indicated by '0' in the OOFV bit. The RMFBI bit is set at the first bit of each T1 DM frame.

Table 14: The Structure of T1 DM

Frame No. In The T1 DM	F-Bit (Frame Alignment)		Channel 24
	Ft	Fs	
1	1		0DY11101
2		0	0DY11101
3	0		0DY11101
4		0	0DY11101
5	1		0DY11101
6		1	0DY11101
7	0		0DY11101
8		1	0DY11101
9	1		0DY11101
10		1	0DY11101
11	0		0DY11101
12		0	0DY11101

Note:
In Channel 24, the 'D' bit is used for data link, and the 'Y' bit is used for alarm. The other 6 bits are fixed and they are called 'DDS' pattern.

3.8.1.1.4 Switch Line Carrier - 96 (SLC-96) Format (T1 only)

The structure of SLC-96 is illustrated in Table 15. The SLC-96 is made up of 6 SFs, but some F-bit are used as Concentrator Bits, Spoiler Bits, Maintenance Bits, Alarm Bits and Switch Bits. Each frame consists of one overhead bit (F-bit) and 24 8-bit channels. Its Frame Alignment Pattern is '001000110111001000110111' in 24 consecutive F-bit positions. If the Frame Alignment Pattern is found in 24 consecutive F-bit positions in the data stream, the SLC-96 synchronization is acquired. The first frame is numbered from the frame whose F-bit contains the first '1' of the Frame Alignment Pattern.

The SLC-96 synchronization is indicated by '0' in the OOFV bit. The RMFBI bit is set at the first bit of each SLC-96 frame.

Table 15: The Structure of SLC-96

Frame No.	F-Bit (Frame Alignment) - Ft	The Bit In Each Channel		Frame No.	F-Bit (Frame Alignment) - Fs	The Bit In Each Channel	
		Data Bit	Signaling Bit			Data Bit	Signaling Bit
1	1	1 - 8	-	2	0	1 - 8	-
3	0	1 - 8	-	4	0	1 - 8	-
5	1	1 - 8	-	6	1	1 - 7	A (bit 8)
7	0	1 - 8	-	8	1	1 - 8	-
9	1	1 - 8	-	10	1	1 - 8	-
11	0	1 - 8	-	12	0	1 - 7	B (bit 8)
13	1	1 - 8	-	14	0	1 - 8	-
15	0	1 - 8	-	16	0	1 - 8	-
17	1	1 - 8	-	18	1	1 - 7	C (bit 8)
19	0	1 - 8	-	20	1	1 - 8	-
21	1	1 - 8	-	22	1	1 - 8	-
23	0	1 - 8	-	24	C1 (Concentrator Bit)	1 - 7	D (bit 8)
25	1	1 - 8	-	26	C2 (Concentrator Bit)	1 - 8	-
27	0	1 - 8	-	28	C3 (Concentrator Bit)	1 - 8	-
29	1	1 - 8	-	30	C4 (Concentrator Bit)	1 - 7	A (bit 8)
31	0	1 - 8	-	32	C5 (Concentrator Bit)	1 - 8	-
33	1	1 - 8	-	34	C6 (Concentrator Bit)	1 - 8	-
35	0	1 - 8	-	36	C7 (Concentrator Bit)	1 - 7	B (bit 8)
37	1	1 - 8	-	38	C8 (Concentrator Bit)	1 - 8	-
39	0	1 - 8	-	40	C9 (Concentrator Bit)	1 - 8	-
41	1	1 - 8	-	42	C10 (Concentrator Bit)	1 - 7	C (bit 8)
43	0	1 - 8	-	44	C11 (Concentrator Bit)	1 - 8	-
45	1	1 - 8	-	46	0 (Spoiler Bit)	1 - 8	-
47	0	1 - 8	-	48	1 (Spoiler Bit)	1 - 7	D (bit 8)
49	1	1 - 8	-	50	0 (Spoiler Bit)	1 - 8	-
51	0	1 - 8	-	52	M1 (Maintenance Bit)	1 - 8	-
53	1	1 - 8	-	54	M2 (Maintenance Bit)	1 - 7	A (bit 8)
55	0	1 - 8	-	56	M3 (Maintenance Bit)	1 - 8	-
57	1	1 - 8	-	58	A1 (Alarm Bit)	1 - 8	-
59	0	1 - 8	-	60	A2 (Alarm Bit)	1 - 7	B (bit 8)
61	1	1 - 8	-	62	S1 (Switch Bit)	1 - 8	-
63	0	1 - 8	-	64	S2 (Switch Bit)	1 - 8	-
65	1	1 - 8	-	66	S3 (Switch Bit)	1 - 7	C (bit 8)
67	0	1 - 8	-	68	S4 (Switch Bit)	1 - 8	-
69	1	1 - 8	-	70	1 (Spoiler Bit)	1 - 8	-
71	0	1 - 8	-	72	0	1 - 7	D (bit 8)

3.8.1.2 Error Event And Out Of Synchronization Detection

After the frame is in synchronization, the Frame Processor continues to monitor the received data stream to detect errors and judge if it is out of synchronization.

3.8.1.2.1 Super Frame (SF) Format

In SF format, two kinds of errors are detected:

1. Severely Ft Bit Error: Each received Ft bit is compared with the expected one (refer to Table 12). Each unmatched Ft bit leads to an Ft bit error event. When 2 or more Ft bit errors are detected in a 6-basic-frame fixed window, the severely Ft bit error occurs. This error event is captured by the SFEI bit.

2. F Bit Error: Each received F bit is compared with the expected one (refer to Table 12). Each unmatched F bit leads to an F bit error event. This error event is captured by the FERI bit and is forwarded to the Performance Monitor.

When the F Bit Error number exceeds the ratio set in the M2O[1:0] bits, it is out of synchronization. Then if the REFEN bit is ‘1’, the Frame Processor will start to search for synchronization again. If the REFEN bit is ‘0’, no error can lead to reframe except for manually setting. The manual reframe is executed by a transition from ‘0’ to ‘1’ on the REFR bit. During out of synchronization state, the error event detection is suspended.

Once resynchronized, if the new-found F bit position differs from the previous one, the change of frame alignment event is generated. This event is captured by the COFAI bit and is forwarded to the Performance Monitor.

3.8.1.2.2 Extended Super Frame (ESF) Format

In ESF format, four kinds of errors are detected:

1. Frame Alignment Bit Error: Each received Frame Alignment bit is compared with the expected one (refer to Table 13). Each unmatched bit leads to a frame alignment bit error event. This error event is captured by the FERI bit and is forwarded to the Performance Monitor.

2. CRC-6 Error: When the local calculated CRC-6 of the current received ESF frame does not match the received CRC-6 of the next received ESF frame, a single CRC-6 error event is generated. This error event is captured by the BEEI bit and is forwarded to the Performance Monitor.

3. Excessive CRC-6 Error: Once the accumulated CRC-6 errors exceed 319 occasions (> 319) in a 1 second fixed window, an excessive CRC-6 error event is generated. This error event is captured by the EXCRCERI bit and is forwarded to the Performance Monitor.

4. Severely Frame Alignment Bit Error: When 2 or more frame alignment bit errors are detected in a 1-ESF-frame fixed window, the severely frame alignment bit error occurs. This error event is captured by the SFEI bit.

When the Frame Alignment Bit Error number exceeds the ratio set in the M2O[1:0] bits, it is out of synchronization. Then if the REFEN bit is ‘1’, the Frame Processor will start to search for synchronization again. Additionally, the Excessive CRC-6 Error also leads to out of ESF synchronization. In this condition, both the REFEN bit being ‘1’ and the REFCRCE bit being ‘1’ will allow the Frame Processor to search for synchronization again. If the REFEN bit is ‘0’, no error can lead to reframe except for manually setting. The manual reframe is executed by a transition from ‘0’ to ‘1’ on the REFR bit. During out of synchronization state, the error event detection is suspended.

Once resynchronized, if the new-found F bit position differs from the previous one, the change of frame alignment event is generated. This event is captured by the COFAI bit and is forwarded to the Performance Monitor.

3.8.1.2.3 T1 Digital Multiplexer (DM) Format (T1 only)

In T1 DM format, three kinds of errors are detected:

1. Severely Ft Bit Error: Each received Ft bit is compared with the expected one (refer to Table 14). Each unmatched Ft bit leads to an Ft bit error event. When 2 or more Ft bit errors are detected in a 6-basic-frame fixed window, the severely Ft bit error occurs. This error event is captured by the SFEI bit.

2. F Bit Error: Each received F bit is compared with the expected one (refer to Table 14). Each unmatched F bit leads to an F bit error event. This error event is captured by the FERI bit and is forwarded to the Performance Monitor.

3. DDS Pattern Error: The received 6-bit DDS in each CH24 is compared with the DDS pattern - ‘0XX11101’ (MSB left and ‘X’ is not cared). When one or more bits do not match the DDS pattern, a single DDS pattern error event is generated. This error event is forwarded to the Performance Monitor.

The 6-bit DDS pattern and its following F-bit make up a 7-bit pattern. When one or more bits do not match its pattern (refer to Table 14), a single error is generated. When this error number exceeds the ratio set in the M2O[1:0] bits, it is out of synchronization. Then if the REFEN bit is ‘1’, the Frame Processor will start to search for synchronization again. If the REFEN bit is ‘0’, no error can lead to reframe except for manually setting. The manual reframe is executed by a transition from ‘0’ to ‘1’ on the REFR bit. During out of synchronization state, the error event detection is suspended.

Once resynchronized, if the new-found F bit position differs from the previous one, the change of frame alignment event is generated. This event is captured by the COFAI bit and is forwarded to the Performance Monitor.

3.8.1.2.4 Switch Line Carrier - 96 (SLC-96) Format (T1 only)

In SLC-96 format, only one kind of error is detected:

1. F Bit Error: The Ft bit in each odd frame and the Fs bit in Frame (2n) (0<n<12 and n=36) is compared with the expected one (refer to Table 15). Each unmatched bit leads to a F-bit error event. This error event is captured by the FERI bit and is forwarded to the Performance Monitor.

Each unmatched Ft bit in the odd frame and each unmatched Fs bit in Frame (2n) (0<n<12 and n=36) are also counted separately. When the number of either of them exceeds the ratio set in the M2O[1:0] bits, it is out of synchronization. Then if the REFEN bit is ‘1’, the Frame Processor will start to search for synchronization again. If the REFEN bit is ‘0’, no error can lead to reframe except for manually setting. The manual reframe is executed by a transition from ‘0’ to ‘1’ on the REFR bit. During out of synchronization state, the error event detection is suspended.

Once resynchronized, if the new-found F bit position differs from the previous one, the change of frame alignment event is generated. This event is captured by the COFAI bit and is forwarded to the Performance Monitor.

3.8.1.3 Overhead Extraction (T1 Mode SLC-96 Format Only)

In SLC-96 format, the Concentrator bits, Maintenance bits, Alarm bits and Switch bits are all extracted to the RDL0, RDL1 & RDL2 registers respectively.

All these extractions will be set to de-bounce if the SCDEB bit is set to '1'. Thus, the value in the RDL0, RDL1 & RDL2 registers are updated if the received corresponding code is the same for 2 consecutive SLC-96 frames. Whether de-bounced or not, a change indication will be set in the SCCI bit, SCMI bit, SCAI bit and SCSI bit respectively if the corresponding codes in the RDL0, RDL1 & RDL2 registers differ from the previous ones.

The value in the RDL0, RDL1 & RDL2 registers is held during out of SLC-96 synchronization state.

3.8.1.4 Interrupt Summary

The interrupt sources in this block are summarized in Table 16. When there are conditions meeting the interrupt sources, the corresponding Status bit will be asserted high. When there is a transition (from '1' to '0' or from '0' to '1') on the Status bit, the corresponding Status Interrupt Indication bit will be set to '1' (If the Status bit does not exist, the source will cause its Status Interrupt Indication bit to '1' directly) and the Status Interrupt Indication bit will be cleared by writing '1'. A '1' in the Status Interrupt Indication bit indicates an interrupt occurred. The interrupt is reported by the $\overline{INT}$ pin if its Status Interrupt Enable bit was set to '1'.

Table 16: Interrupt Source In T1/J1 Frame Processor

Sources	Status Bit	Interrupt Indication Bit	Interrupt Enable Bit
It is out of synchronization.	OOFV	OOFI	OOFE
The first bit of each SF / ESF / T1 DM / SLC-96 frame is received.	-	RMFBI	RMFBE
The new-found F bit position differs from the previous one.	-	COFAI	COFAE
In SF / T1 DM / SLC-96 format, the F Bit Error occurs. In ESF format, the Frame Alignment Bit Error occurs.	-	FERI	FERE
In ESF format, the CRC-6 Error occurs. (This interrupt does not exist in other formats.)	-	BEEI	BEEE
In SF / T1 DM format, the Severely Ft Bit Error occurs. In ESF format, the Severely Frame Alignment Bit Error occurs. (This interrupt does not exist in SLC-96 format.)	-	SFEI	SFEE
In SLC-96 format, the Concentrator bits differ from the previous ones.	-	SCCI	SCCE
In SLC-96 format, the Maintenance bits differ from the previous ones.	-	SCMI	SCME
In SLC-96 format, the Alarm bits differ from the previous ones.	-	SCAI	SCAE
In SLC-96 format, the Switch bits differ from the previous ones.	-	SCSI	SCSE

Table 17: Related Bit / Register In Chapter 3.8.1

Bit	Register	T1/J1 Address (Hex)
UNFM	FRMR Mode 0	04D, 14D, 24D, 34D
REFEN		
REFR		
REFCRCE		
MIMICC	FRMR Mode 1	04E, 14E, 24E, 34E
M2O[1:0]		
DDSC		
OOFV	FRMR Status	04F, 14F, 24F, 34F
MIMICI	FRMR Interrupt Indication 0	052, 152, 252, 352
EXCRCERI		
OOFI		
RMFBI	FRMR Interrupt Indication 1	053, 153, 253, 353
SFEI		
BEEI		
FERI		
COFAI		
OOFE	FRMR Interrupt Control 0	050, 150, 250, 350
RMFBE	FRMR Interrupt Control 1	051, 151, 251, 351
SFEE		
BEEE		
FERE		
COFAE		
C[11:1]	RDL1 & RDL0	057, 157, 257, 357 & 056, 156, 256, 356
M[3:1]	RDL1	057, 157, 257, 357
A[2:1]	RDL2	058, 158, 258, 358
S[4:1]		
SCAI	DLB Interrupt Indication	05D, 15D, 25D, 35D
SCSI		
SCMI		
SCCI		
SCDEB	DLB Interrupt Control	05C, 15C, 25C, 35C
SCAE		
SCSE		
SCME		
SCCE		

3.8.2 E1 MODE

In E1 mode, the Frame Processor searches for Basic Frame synchronization, CRC Multi-frame synchronization, and Channel Associated Signaling (CAS) Multi-frame synchronization in the received data stream. Figure 9 shows the searching process.

Once the frame is synchronized, the Frame Processor keeps on monitoring the received data stream. If there are any framing bit errors, CAS Multi-Frame alignment pattern errors, CRC Multi-Frame alignment pattern errors or CRC errors, the Frame Processor will indicate these errors. The status of loss of frame, loss of Signaling Multi-Frame and loss of CRC Multi-Frame can also be detected and declared based on user-selectable criteria. A software reset can also make the Frame Processor reframe.

The Frame Processor can extract the data stream in TS16, and output the extracted data on a separate pin. The Frame Processor also extracts the contents of the International bits (from both the FAS and the NFAS frames), the National bits and the Extra bits (from TS16 in the frame 0 of the Signaling Multi-Frame), and stores these data in registers. The CRC Sub Multi-Frame alignment 4 bit codeword in the National bit positions Sa4 to Sa8 can also be extracted and stored in registers, and updated every CRC Sub Multi-Frame.

The Framer Processor identifies the Remote Alarm bit (bit 3 of TS0 of NFAS frames) and Remote Signaling Multi-Frame Alarm (bit 6 of TS16 of the frame 0 of the Signaling Multi-Frame). The ‘de-bounced’ Remote Alarm and Remote Signaling Multi-Frame Alarm can be indicated if the corresponding bit has been a certain logic for 1 or 4 consecutive times. The AIS (Alarm Indication Signal) Alarm can also be detected. The Frame Processor can also declare a Red Alarm if the out-of-frame condition has persisted for at least 100 ms.

An interrupt output is provided to indicate status changes and the occurrence of some events. The interrupts may be generated every Basic Frame, CRC Sub Multi-Frame, CRC Multi-Frame or Signaling Multi-Frame.

The Frame Processor can also be bypassed by setting the UNFM bit.

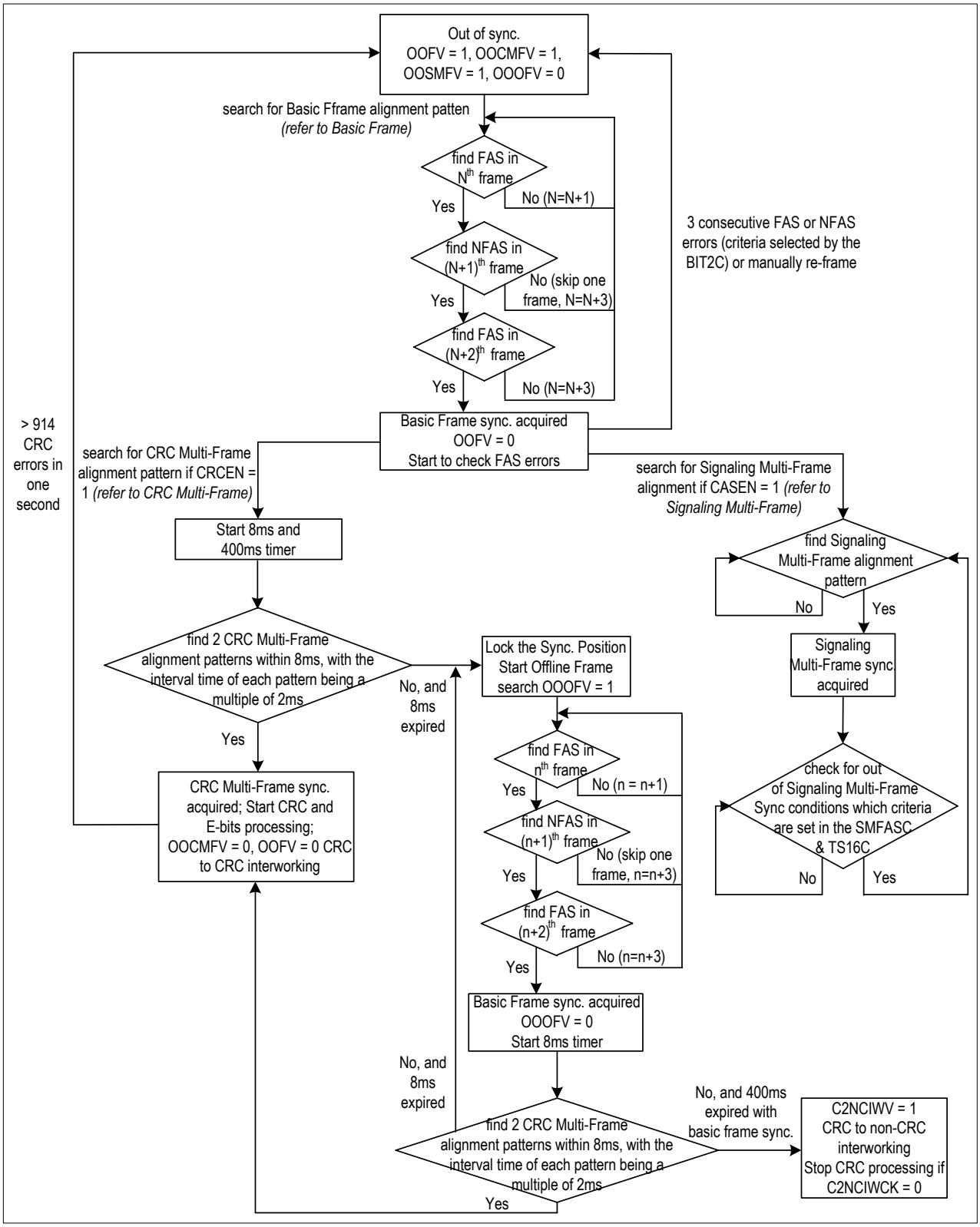

Figure 9. E1 Frame Searching Process

3.8.2.1 Synchronization Searching

3.8.2.1.1 Basic Frame

The algorithm used to search for the E1 Basic Frame alignment pattern (as shown in Figure 10) meets the ITU-T Recommendation G.706 4.1.2 and 4.2.

Generally, it is performed by detecting a successive FAS/NFAS/FAS sequence. If STEP 2 is not met, a new searching will start after the following frame is skipped. If STEP 3 is not met, a new searching will start immediately in the next frame. Once the Basic Frame alignment pattern is detected in the received PCM data stream, the Basic Frame synchronization is found and the OOFV bit will be set to '0' for indication.

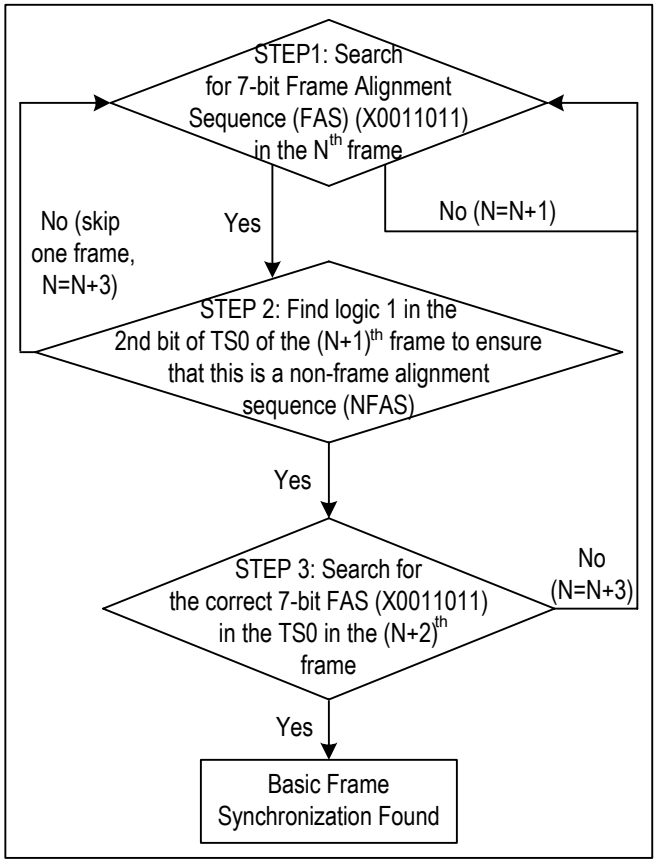

Figure 10. Basic Frame Searching Process

3.8.2.1.2 CRC Multi-Frame

The CRC Multi-Frame is provided to enhance the ability of verifying the data stream. The structure of TS0 of the CRC Multi-Frame is illustrated in Table 18.

A CRC Multi-Frame consists of 16 continuous Basic Frames (No. 0 – 15) which are numbered from a Basic Frame with FAS. Each CRC Multi-Frame can be divided into two Sub Multi-Frames (SMF I & SMF II).

The first bit of TS0 of each frame is called the International (Si) bit. The Si bit in each even frame is the CRC bit. Thus, there are C1, C2, C3, C4 in each SMF. The C1 is the most significant bit, while the C4 is the least significant bit. The Si bit in the first six odd frames is the CRC Multi-Frame alignment pattern. Its pattern is '001011'. The Si bit in Frame 13 and Frame 15 are E1 and E2 bits. The value of the E bits can indicate the Far End Block Errors (FEBE).

Table 18: The Structure Of TS0 In CRC Multi-Frame

	SMF	Basic Frame No. / Type	the Eight Bits in Timeslot 0							
			1 (Si bit)	2	3	4	5	6	7	8
CRC-4 Multi-Frame	SMF I	0 / FAS	C1	0	0	1	1	0	1	1
		1 / NFAS	0	1	A	Sa4	Sa5	Sa6	Sa7	Sa8
		2 / FAS	C2	0	0	1	1	0	1	1
		3 / NFAS	0	1	A	Sa4	Sa5	Sa6	Sa7	Sa8
		4 / FAS	C3	0	0	1	1	0	1	1
		5 / NFAS	1	1	A	Sa4	Sa5	Sa6	Sa7	Sa8
		6 / FAS	C4	0	0	1	1	0	1	1
		7 / NFAS	0	1	A	Sa4	Sa5	Sa6	Sa7	Sa8
	SMF II	8 / FAS	C1	0	0	1	1	0	1	1
		9 / NFAS	1	1	A	Sa4	Sa5	Sa6	Sa7	Sa8
		10 / FAS	C2	0	0	1	1	0	1	1
		11 / NFAS	1	1	A	Sa4	Sa5	Sa6	Sa7	Sa8
		12 / FAS	C3	0	0	1	1	0	1	1
		13 / NFAS	E1	1	A	Sa4	Sa5	Sa6	Sa7	Sa8
		14 / FAS	C4	0	0	1	1	0	1	1
		15 / NFAS	E2	1	A	Sa4	Sa5	Sa6	Sa7	Sa8

After the Basic Frame has been synchronized, the Frame Processor initiates an 8 and a 400 ms timer to check the CRC Multi-Frame alignment signal if the CRCEN bit is '1'. The CRC Multi-Frame synchronization is declared with a '0' in the OOCMFV bit only if at least two CRC Multi-Frame alignment patterns are found within 8 ms, with the interval time of each pattern being a multiple of 2 ms. Then if the received CRC Multi-Frame alignment signal does not meet its pattern, it will be indicated by the CMFERI bit.

If the 2 CRC Multi-Frame alignment patterns can not be found within 8ms with the interval time being a multiple of 2 ms, an offline search for the Basic Frame alignment pattern will start which is indicated in the OOOFV bit. The process is the same as shown in Figure 10. This offline operation searches in parallel with the pre-found Basic Frame synchronization searching process. After the new Basic Frame synchronization is found by this offline search, the 8 ms timer is restarted to check whether the two CRC Multi-Frame alignment patterns are found within 8 ms, with the interval time of each pattern being a multiple of 2 ms again. If the condition can not be met, the procedure will go on until the 400 ms timer ends. If the condition still can not be met at that time and the Basic Frame is still synchronized, the device declares by the C2NCIWV bit to run under the CRC to non-CRC interworking process. In this process, the CRC Multi-Frame alignment pattern can still be searched if the C2NCIWCK bit is logic 1.

3.8.2.1.3 CAS Signaling Multi-Frame

After the Basic Frame has been synchronized, the Frame Processor starts to search for CAS Signaling Multi-Frame alignment signal if the CASEN bit is '1'.

The Signaling Multi-Frame alignment pattern is located in the high nibble (Bit 1 ~ Bit 4) of TS16. Its pattern is '0000'. When the pattern is found in TS16 and the high nibble of the previous TS16 are not all zeros, the Signaling Multi-Frame synchronization is acquired and it is indicated with a '0' in the OOSMFV bit. The frame containing the Signaling Multi-Frame alignment pattern is Frame 0 of Signaling Multi-Frame. The TS16 structure of the Signaling Multi-Frame is shown in Figure 11. The entire content in TS16 of Frame 0 of Signaling Multi-Frame is '0000XYXX'. 'Y' is for remote Signaling Multi-Frame alarm indication and 'X's are extra bits. The codeword 'ABCD' are the signaling bits for different timeslots.

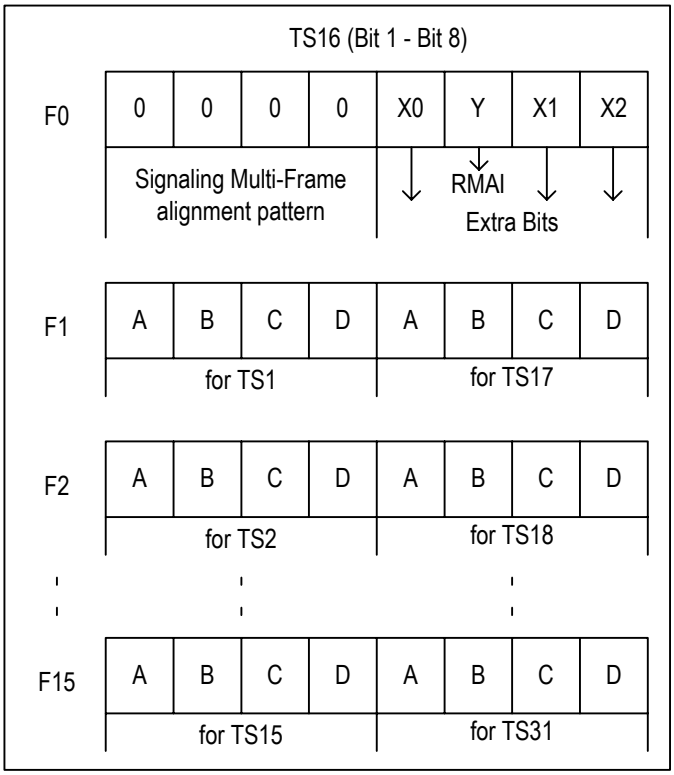

Figure 11. TS16 Structure Of CAS Signaling Multi-Frame

3.8.2.2 Error Event And Out Of Synchronization Detection

After the frame is in synchronization, the Frame Processor keeps on monitoring the received data stream to detect errors and judge if it is out of synchronization.

The following ten kinds of errors are detected:

1. FAS/NFAS Bit/Pattern Error: The criteria of this error are determined by the WORDERR bit and the CNTNFAS bit (refer to Table 19). This error event is captured by the FERI bit and is forwarded to the Performance Monitor.

Table 19: FAS/NFAS Bit/Pattern Error Criteria

WORDERR	CNTNFAS	Error Generation
0	0	Each bit error in FAS is counted as an error event.
1	0	A FAS pattern error is counted as an error event.
0	1	Each bit error in FAS or NFAS error is counted as an error event.
1	1	A FAS pattern error or NFAS error is counted as an error event.

2. CRC Multi-Frame Alignment Pattern Error: The received CRC Multi-Frame alignment signals are compared with the expected ones ('001011'). When one or more bits do not match, a single CRC Multi-Frame alignment pattern error event is generated. This error event is captured by the CMFERI bit.

3. CRC-4 Error: When the local calculated CRC-4 of the current received CRC Sub Multi-Frame does not match the received CRC-4 of the next received CRC Sub Multi-Frame, a single CRC-4 error event is generated. This error event is captured by the CRCEI bit and is forwarded to the Performance Monitor.

4. Excessive CRC-4 Error: Once the accumulated CRC-4 errors are not less than 915 occasions (915 is included) in a 1 second fixed window, an excessive CRC-4 error event is generated. This error event is captured by the EXCRCERI bit.

5. CAS Signaling Multi-Frame Alignment Pattern Error: The received Signaling Multi-Frame alignment signals are compared with the expected ones ('0000'). When one or more bits do not match, a single CAS Signaling Multi-Frame alignment pattern error event is generated. This error event is captured by the SMFERI bit.

6. Far End Block Error (FEBE): When any of the CRC error indication (E1 or E2) bits is received as a logic 0, a far end block error event is generated. This error event is captured by the FEBEI bit and is forwarded to the Performance Monitor.

7. Continuous RAI & FEBE Error: When a logic 1 is received in the A bit and a logic 0 is received in any of the E1 or E2 bit for 10 ms, the RAICRCV bit is set. This bit is cleared if any of the conditions is not met.

8. Continuous FEBE Error: When a logic 0 is received in any of the E1 or E2 bits on ≥ 990 occasions per second for the latest 5 consecutive seconds, the CFEBEV bit is set, otherwise this bit will be cleared.

9. NT FEBE Error (per ETS 300 233): If the 4-bit Sa6 codeword of a CRC Sub Multi-Frame is matched with '0001' or '0011', the Network Terminal Far End Block Error event is generated. This error event is captured by the TFEBEI bit and is forwarded to the Performance Monitor.

10. NT CRC Error (per ETS 300 233): If the 4-bit Sa6 codeword of a CRC Sub Multi-Frame is matched with '0010' or '0011', the Network Terminal CRC Error event is generated. This error event is captured by the TCRCEI bit and is forwarded to the Performance Monitor.

Various errors will lead to out of synchronization:

3.8.2.2.1 Out Of Basic Frame Synchronization

If there is one or more bit errors in a FAS pattern, a FAS pattern error will occur. If the NFAS bit position is received as zero, a NFAS error will occur. Determined by the BIT2C bit, if this bit is '0', 3 consecutive FAS pattern errors lead to out of Basic frame synchronization; if this bit is '1', 3 consecutive FAS pattern errors or 3 consecutive NFAS errors lead to out of Basic frame synchronization. Then if the REFEN bit is '1', the Frame Processor will start to search for synchronization again. Additionally, Excessive CRC-4 Error also leads to out of Basic frame synchronization. In this condition, both the REFEN bit being '1' and the REFCRCE bit being '1' will allow the Frame Processor to search for synchronization again. If the REFEN bit is '0', no error can lead to reframe except for manually setting. The manual reframe searches from Basic frame and is executed by a transition from '0' to '1' on the REFR bit. During out of Basic frame synchronization state, the FAS/NFAS Bit/Pattern Error detection is suspended.

Once resynchronized, if the new-found Basic frame alignment pattern position differs from the previous one, the change of frame alignment event is generated. This event is captured by the COFAI bit and is forwarded to the Performance Monitor.

3.8.2.2.2 Out Of CRC Multi-Frame Synchronization

The conditions introducing out of Basic frame synchronization will also cause out of CRC Multi-Frame synchronization. During out of CRC Multi-Frame synchronization state, the FAS/NFAS Bit/Pattern Error detection, CRC Multi-Frame Alignment Pattern Error detection, CRC-4 Error detection, Excessive CRC-4 Error detection, Far End Block Error detection, Continuous RAI & FEBE Error detection, Continuous FEBE Error detection, NT CRC Error detection and NT FEBE Error detection are suspended.

3.8.2.2.3 Out Of CAS Signaling Multi-Frame Synchronization

The conditions introducing out of Basic frame synchronization will also cause out of CAS Signaling Multi-Frame synchronization.

In addition, determined by the SMFASC bit and the TS16C bit, if the CAS Signaling Multi-Frame Alignment Pattern Error occurs or all the contents in TS16 are zeros, it is out of CAS Signaling Multi-Frame synchronization. Then no matter what the value in the REFEN bit is, the Frame Processor will search for the CAS Signaling Multi-Frame synchronization again only if the Basic frame is in synchronization. During out of CAS Signaling Multi-Frame synchronization state, the CAS Signaling Multi-Frame Alignment Pattern Error detection is suspended.

3.8.2.3 Overhead Extraction

3.8.2.3.1 International Bit Extraction

The International bits (Si bits, refer to Table 18) are extracted to the Si[0:1] bits in the TS0 International / National register. The Si[0:1] bits in the TS0 International / National register are updated on the boundary of the associated FAS/NFAS frame and are held during out of Basic frame state.

3.8.2.3.2 Remote Alarm Indication Bit Extraction

The Remote Alarm Indication bit (A bit, refer to Table 18) is extracted to the A bit in the TS0 International / National register. The A bit in the TS0 International / National register is updated on the boundary of the associated NFAS frame and is held during out of Basic frame state.

3.8.2.3.3 National Bit Extraction

The National bits (Sa bits, refer to Table 18) are extracted to the Sa[4:8] bits in the TS0 International / National register. The Sa[4:8] bits in the TS0 International / National register are updated on the boundary of the associated NFAS frame and are held during out of Basic frame.

3.8.2.3.4 National Bit Codeword Extraction

The five sets of the National Bit codewords (Sa4[1:4] to Sa8[1:4] in the CRC Sub Multi-Frame, refer to Table 18) are extracted to the corresponding SaX Codeword register. Here the 'X' is from 4 through 8. The National Bit codeword extraction will be set to de-bounce if the SaDEB bit is set to '1'. Thus, the SaX Codeword registers are updated if the received National Bit codeword is the same for 2 consecutive CRC Sub Multi-Frames. Whether de-bounced or not, a change indication will be set in the SaXI bit ('X' is from 4 through 8) if the corresponding codeword in the SaX Codeword register differs from the previous one.

The value in the SaX Codeword registers is held during out of CRC Multi-Frame synchronization state.

3.8.2.3.5 Extra Bit Extraction

The Extra bits (X bits, refer to Figure 11) are extracted to the X[0:2] bits in the TS16 Spare register. The X[0:2] bits in the TS16 Spare register are updated at the first bit of the next CAS Signaling Multi-Frame and are held during out of CAS Signaling Multi-Frame state.

3.8.2.3.6 Remote Signaling Multi-Frame Alarm Indication Bit Extraction

The Remote Signaling Multi-Frame Alarm Indication bit (Y bit, refer to Figure 11) are extracted to the Y bit in the TS16 Spare register. The Y bit in the TS16 Spare register is updated at the first bit of the next CAS Signaling Multi-Frame and is held during out of CAS Signaling Multi-Frame state.

3.8.2.3.7 Sa6 Code Detection Per ETS 300 233

When Basic frame is synchronized, any 12 consecutive Sa6 bits (MSB is the first received bit) are compared with 0x888, 0xAAA, 0xCCC, 0xEEE and 0xFFF. When CRC Multi-Frame is synchronized, any 3 consecutive 4-bit Sa6 codewords in the CRC Sub Multi-Frame are com-

pared if the Sa6SYN bit is '1'. If a matched code is detected, the corresponding indication bit in the Sa6 Code Indication register will be set.

3.8.2.4 V5.2 Link

The V5.2 link ID signal, i.e., 2 out of 3 sliding Sa7 bits being logic 0, is detected with the indication in the V52LINKV bit. This detection is disabled when the Basic Frame is out of synchronization.

3.8.2.5 Interrupt Summary

The interrupt sources in this block are summarized in Table 20. When there are conditions meeting the interrupt sources, the corresponding Status bit will be asserted high. When there is a transition (from '1' to '0' or from '0' to '1') on the Status bit, the corresponding Status Interrupt Indication bit will be set to '1' (If the Status bit does not exist, the source will cause its Status Interrupt Indication bit to '1' directly) and the Status Interrupt Indication bit will be cleared by a write signal. A '1' in the Status Interrupt Indication bit means an interrupt occurred. The interrupt will be reported by the $\overline{INT}$ pin if its Status Interrupt Enable bit is '1'.

Table 20: Interrupt Source In E1 Frame Processor

Sources	Status Bit	Interrupt Indication Bit	Interrupt Enable Bit
In CRC to Non-CRC inter-working.	C2NCIWV	C2NCIWI	C2NCIWE
It is out of Basic frame synchronization.	OOFV	OOFI	OOFE
It is out of CRC multi-frame synchronization.	OOCMFV	OOCMFI	OOCMFE
It is out of CAS Signaling multi-frame synchronization.	OOSMFV	OOSMFI	OOSMFE
The new-found Basic frame alignment pattern position differs from the previous one.	-	COFAI	COFAE
FAS/NFAS Bit/Pattern Error occurs.	-	FERI	FERE
CRC Multi-Frame Alignment Pattern Error occurs.	-	CMFERI	CMFERE
CAS Signaling Multi-Frame Alignment Pattern Error occurs.	-	SMFERI	SMFERE
CRC-4 Error occurs.	-	CRCEI	CRCEE
Offline Basic frame search indication.	OOOFV	OOOFI	OOOFE
Far End Block Error occurs.	-	FEBEI	FEBEE
Continuous RAI & FEBE Error occurs.	RAICRCV	RAICRCI	RAICRCE
Continuous FEBE Error occurs.	CFEBEV	CFEBEI	CFEBEE
At the first bit of each CRC Multi-Frame.	-	ICMFPI	ICMFPE
At the first bit of each CRC Sub Multi-Frame.	-	ICSMFPI	ICSMFPE
At the first bit of each CAS Signaling Multi-Frame.	-	ISMFPI	ISMFPE
There is change in the corresponding SaX[1:4] bits. The 'X' is from 4 through 8.	-	Sa4I / Sa5I / Sa6I / Sa7I / Sa8I	Sa4E / Sa5E / Sa6E / Sa7E / Sa8E
Any 12 consecutive Sa6 bits or any 3 consecutive 4-bit Sa6 codewords are matched with 0x888, 0xAAA, 0xCCC, 0xEEE or 0xFFF.	-	Sa6SCI	Sa6SCE
NT FEBE Error occurs.	-	TFEBEI	TFEBEE
NT CRC Error occurs.	-	TCRCEI	TCRCEE
2 out of 3 sliding Sa7 bits are received as logic 0.	V52LINKV	V52LINKI	V52LINKE

Table 21: Related Bit / Register In Chapter 3.8.2

Bit	Register	E1 Address (Hex)
UNFM	FRMR Mode 0	04D, 14D, 24D, 34D
REFEN		
REFCRCE		
REFR		
CRCEN	FRMR Mode 1	04E, 14E, 24E, 34E
C2NCIWCK		
CASEN		
WORDERR		
CNTNFAS		
BIT2C		
SMFASC		
TS16C		
OOFV	FRMR Status	04F, 14F, 24F, 34F
OOCMFV		
OOOFV		
C2NCIWV		
OOSMFV		
EXCRCERI	FRMR Interrupt Indication 0	052, 152, 252, 352
C2NCIWI		
OOFI		
OOCMFI		
OOSMFI		
OOOFI		
OOFE	FRMR Interrupt Control 0	050, 150, 250, 350
OOCMFE		
OOOFE		
C2NCIWE		
OOSMFE		
CMFERI	FRMR Interrupt Indication 1	053, 153, 253, 353
FERI		
CRCEI		
SMFERI		
COFAI		
ICMFPI		
ICSMFPI		
ISMFPI		
CMFERE	FRMR Interrupt Control 1	051, 151, 251, 351
FERE		
CRCEE		
SMFERE		
COFAE		
ICMFPE		
ICSMFPE		
ISMFPE		

Table 21: Related Bit / Register In Chapter 3.8.2 (Continued)

Bit	Register	E1 Address (Hex)
RAICRCV	Overhead Error Status	05F, 15F, 25F, 35F
CFEBEV		
V52LINKV		
FEBEI	Overhead Interrupt Indication	061, 161, 261, 361
TFEBEI		
TCRCEI		
RAICRCI		
CFEBEI		
V52LINKI		
FEBEE	Overhead Interrupt Control	060, 160, 260, 360
TFEBEE		
TCRCEE		
RAICRCE		
CFEBEE		
V52LINKE		
Si[0:1]	TS0 International / National	054, 154, 254, 354
A		
Sa[4:8]		
X[0:2]	TS16 Spare	055, 155, 255, 355
Y		
SaX[1:4] ('X' is from 4 to 8)	Sa4 Codeword ~ Sa8 Codeword	056 ~ 05A, 156 ~ 15A, 256 ~ 25A, 356 ~ 35A
SaXI ('X' is from 4 to 8)	Sa Codeword Interrupt Indication	05D, 15D, 25D, 35D
Sa6SCI		
SaXE ('X' is from 4 to 8)	Sa Codeword Interrupt Control	05C, 15C, 25C, 35C
SaDEB		
Sa6SYN		
Sa6SCE		
Sa6-8I	Sa6 Codeword Indication	05B, 15B, 25B, 35B
Sa6-AI		
Sa6-CI		
Sa6-EI		
Sa6-FI		

3.9 PERFORMANCE MONITOR

3.9.1 T1/J1 MODE

Several internal counters are used to count different events for performance monitoring. For different framing format, the counters are used differently. The overflow of each counter is reflected by an Overflow Indication Bit, and can trigger an interrupt if the corresponding Overflow Interrupt Enable Bit is set. This is shown in Table 22.

These internal counters are indirect registers, and can only be accessed through other direct registers. At one time, only one internal counter can be accessed. Users should use the LINKSEL[1:0] bits to select the Link, then use the ADDR[3:0] bits to select one internal counter. The content of the selected counter is transferred to the DATA[7:0] bits in the following two ways:

1. Auto-Report: When the AUTOUP bit is ‘1’, the selected counter transfers its content to the DATA[7:0] bits every one second automatically;

2. Manual-Report: No matter the AUTOUPD bit is ‘1’ or ‘0’, at any time, when there is a transition from ‘0’ to ‘1’ on the UPDAT bit, the selected counter will transfer its content to the DATA[7:0] bits.

After the content in the selected counter is transferred to the DATA[7:0] bits, all counters belong to the selected Link will be cleared to ‘0’ as a group and start a new round counting automatically. No error event is lost during updating.

Table 22: Monitored Events In T1/J1 Mode

Format	Event	Counter	Overflow Interrupt Indication Bit	Overflow Interrupt Enable Bit
SF	Bipolar Violation (BPV) Error (in AMI decoding) or B8ZS Code Violation (CV) Error (in B8ZS decoding)	LCV[15:0]	LCVOVI	LCVOVE
	F Bit Error	FER[11:0]	FEROVI	FEROVE
	The new-found F bit position differs from the previous one	COFA[2:0]	COFAOVI	COFAOVE
	Out of SF synchronization	OOF[4:0]	OOFOVI	OOFOVE
	PRGD Bit Error	PRGD[15:0]	PRGDOVI	PRGDOVE
ESF	Bipolar Violation (BPV) Error (in AMI decoding) or B8ZS Code Violation (CV) Error (in B8ZS decoding)	LCV[15:0]	LCVOVI	LCVOVE
	Frame Alignment Bit Error	FER[11:0]	FEROVI	FEROVE
	CRC-6 Error	CRCE[9:0]	CRCOVI	CRCOVE
	The new-found F bit position differs from the previous one	COFA[2:0]	COFAOVI	COFAOVE
	Out of ESF synchronization	OOF[4:0]	OOFOVI	OOFOVE
	PRGD Bit Error	PRGD[15:0]	PRGDOVI	PRGDOVE
T1 DM (T1 only)	Bipolar Violation (BPV) Error (in AMI decoding) or B8ZS Code Violation (CV) Error (in B8ZS decoding)	LCV[15:0]	LCVOVI	LCVOVE
	F Bit Error	FER[11:0]	FEROVI	FEROVE
	DDS Pattern Error	DDSE[9:0]	DDSOVI	DDSOVE
	The new-found F bit position differs from the previous one	COFA[2:0]	COFAOVI	COFAOVE
	Out of T1 DM synchronization	OOF[4:0]	OOFOVI	OOFOVE
	PRGD Bit Error	PRGD[15:0]	PRGDOVI	PRGDOVE
SLC-96 (T1 only)	Bipolar Violation (BPV) Error (in AMI decoding) or B8ZS Code Violation (CV) Error (in B8ZS decoding)	LCV[15:0]	LCVOVI	LCVOVE
	F Bit Error	FER[11:0]	FEROVI	FEROVE
	The new-found F bit position differs from the previous one	COFA[2:0]	COFAOVI	COFAOVE
	Out of SLC-96 synchronization	OOF[4:0]	OOFOVI	OOFOVE
	PRGD Bit Error	PRGD[15:0]	PRGDOVI	PRGDOVE

Table 23: Related Bit / Register In Chapter 3.9.1

Bit	Register	T1/J1 Address (Hex)
LCV[15:0]	ID* - LCV Counter Mapping 1 & 0	PMON ID - 09 & 08
FER[11:0]	ID - FER Counter Mapping 1 & 0	PMON ID - 03 & 02
COFA[2:0]	ID - COFA Counter Mapping	PMON ID - 04
OOF[4:0]	ID - OOF Counter Mapping	PMON ID - 05
PRGD[15:0]	ID - PRGD Counter Mapping 1 & 0	PMON ID - 07 & 06
CRCE[9:0]	ID - CRCE Counter Mapping 1 & 0	PMON ID - 01 & 00
DDSE[9:0]	ID - DDSE Counter Mapping 1 & 0	PMON ID - 0B & 0A
LCVOVI	PMON Interrupt 1	0C6, 1C6, 2C6, 3C6
FEROVI	PMON Interrupt 0	0C5, 1C5, 2C5, 3C5
COFAOVI		
OOFOVI		
PRGDOVI		
CRCOVI		
DDSOVI		
LCVOVE	PMON Interrupt Control 1	0C4, 1C4, 2C4, 3C4
FEROVE	PMON Interrupt Control 0	0C3, 1C3, 2C3, 3C3
COFAOVE		
OOFOVE		
PRGDOVE		
CRCOVE		
DDSOVE		
LINKSEL[1:0]	PMON Access Port	00E
ADDR[3:0]		
DATA[7:0]	PMON Access Data	00F
UPDAT	PMON Control	0C2, 1C2, 2C2, 3C2
AUTOUPD		

Note:
* ID means Indirect Register in the Performance Monitor function block.

3.9.2 E1 MODE

Several internal counters are used to count different events for performance monitoring. The overflow of each counter is reflected by an Overflow Indication Bit, and can trigger an interrupt if the corresponding Overflow Interrupt Enable Bit is set. This is shown in Table 24.

These internal counters are indirect registers, and can only be accessed through other direct registers. At one time, only one internal counter can be accessed. Users should use the LINKSEL[1:0] bits to select the Link, then use the ADDR[3:0] bits to select one internal counter. The content of the selected counter is transferred to the DATA[7:0] bits in the following two ways:

1. Auto-Report: When the AUTOUP bit is ‘1’, the selected counter transfers its content to the DATA[7:0] bits every one second automatically;

2. Manual-Report: No matter the AUTOUPD bit is ‘1’ or ‘0’, at any time, when there is a transition from ‘0’ to ‘1’ on the UPDAT bit, the selected counter will transfer its content to the DATA[7:0] bits.

After the content in the selected counter is transferred to the DATA[7:0] bits, all counters belong to the selected Link will be cleared to ‘0’ as a group and start a new round counting automatically. No error event is lost during updating.

Table 24: Monitored Events In E1 Mode

Event	Counter	Overflow Interrupt Indication Bit	Overflow Interrupt Enable Bit
Bipolar Violation (BPV) Error (in AMI decoding) or HDB3 Code Violation (CV) Error (in HDB3 decoding)	LCV[15:0]	LCVOVI	LCVOVE
FAS/NFAS Bit/Pattern Error	FER[11:0]	FEROVI	FEROVE
CRC-4 Error	CRCE[9:0]	CRCOVI	CRCOVE
Far End Block Error	FEBE[9:0]	FEBEOVI	FEBEOVE
The the new-found Basic frame alignment pattern position differs from the previous one	COFA[2:0]	COFAOVI	COFAOVE
Out of Basic frame synchronization	OOF[4:0]	OOFOVI	OOFOVE
PRGD Bit Error	PRGD[15:0]	PRGDOVI	PRGDOVE
NT FEBE Error	TFEBE[9:0]	TFEBEOVI	TFEBEOVE
NT CRC Error	TCRCE[9:0]	TCRCOVI	TCRCOVE

Table 25: Related Bit / Register In Chapter 3.9.2

Bit	Register	E1 Address (Hex)
LCV[15:0]	ID* - LCV Counter Mapping 1 & 0	PMON ID - 09 & 08
FER[11:0]	ID - FER Counter Mapping 1 & 0	PMON ID - 03 & 02
CRCE[9:0]	ID - CRCE Counter Mapping 1 & 0	PMON ID - 01 & 00
FEBE[9:0]	ID - FEBE Counter Mapping 1 & 0	PMON ID - 0D & 0C
COFA[2:0]	ID - COFA Counter Mapping	PMON ID - 04
OOF[4:0]	ID - OOF Counter Mapping	PMON ID - 05
PRGD[15:0]	ID - PRGD Counter Mapping 1 & 0	PMON ID - 07 & 06
TFEBE[9:0]	ID - TFEBE Counter Mapping 1 & 0	PMON ID - 0F & 0E
TCRCE[9:0]	ID - TCRCE Counter Mapping 1 & 0	PMON ID - 0B & 0A
LCVOVI	PMON Interrupt 1	0C6, 1C6, 2C6, 3C6
FEROVI	PMON Interrupt 0	0C5, 1C5, 2C5, 3C5
CRCOVI		
FEBEOVI		
COFAOVI		
OOFOVI		
PRGDOVI		
TFEBEOVI		
TCRCOVI		
LCVOVE	PMON Interrupt Control 1	0C4, 1C4, 2C4, 3C4
FEROVE	PMON Interrupt Control 0	0C3, 1C3, 2C3, 3C3
CRCOVE		
FEBEOVE		
COFAOVE		
OOFOVE		
PRGDOVE		
TFEBEOVE		
TCRCOVE		
LINKSEL[1:0]	PMON Access Port	00E
ADDR[3:0]		
DATA[7:0]	PMON Access Data	00F
UPDAT	PMON Control	0C2, 1C2, 2C2, 3C2
AUTOUPD		

Note:
* ID means Indirect Register in the Performance Monitor function block.

3.10 ALARM DETECTOR

3.10.1 T1/J1 MODE

The RED alarm, Yellow alarm and Blue alarm are detected in this block (refer to Table 26).

The status of the RED alarm, Yellow alarm and Blue alarm are indicated by the corresponding Status bit. Any transition (from '0' to '1' or from '1' to '0') on the Status bit will set the corresponding Interrupt Indication bit to '1' and the Interrupt Indication bit will be cleared by writing a '1'. A '1' in the Interrupt Indication bit means there is an interrupt. The interrupt will be reported by the $\overline{INT}$ pin if its Interrupt Enable bit is '1'.

Table 26: RED Alarm, Yellow Alarm & Blue Alarm Criteria

		Declare Condition	Clear Condition	Status Bit	Interrupt Indication Bit	Interrupt Enable Bit
RED Alarm (per T1.403, T1.231)		The out of SF/ESF/T1 DM/SLC-96 synchronization status persists Nx40 ms. Here 'N' is decided by the REDDTH[7:0] bits.	The in SF/ESF/T1 DM/SLC-96 synchronization status persists Mx120 ms. Here 'M' is decided by the REDCTH[7:0] bits.	RED	REDI	REDE
Yellow Alarm*	**T1 SF/ SLC-96 Format**	Less than 77 'One's are detected on the Bit 2 of each channel during a 40 ms fixed window and this status persists for Nx40 ms. Here 'N' is decided by the YELDTH[7:0] bits.	More than 76 'One's are detected on the Bit 2 of each channel during a 40 ms fixed window and this status persists for Mx40 ms. Here 'M' is decided by the YELCTH[7:0] bits.	YEL	YELI	YELE
	T1 ESF Format	More than 7 '0xFF00' (MSB first) are detected on the DL bits during a 40 ms fixed window and this status persists for Nx40 ms. Here 'N' is decided by the YELDTH[7:0] bits.	Less than 8 '0xFF00' (MSB first) are detected on the DL bits during a 40 ms fixed window and this status persists for Mx40 ms. Here 'M' is decided by the YELCTH[7:0] bits.	YEL	YELI	YELE
	T1 DM Format	Less than 4 'One's are detected on the Y bit (Bit 6 in each CH 24) during a 40 ms fixed window and this status persists for Nx40 ms. Here 'N' is decided by the YELDTH[7:0] bits.	More than 3 'One's are detected on the Y bit (Bit 6 in each CH 24) during a 40 ms fixed window and this status persists for Mx40 ms. Here 'M' is decided by the YELCTH[7:0] bits.	YEL	YELI	YELE
	J1 SF Format	Less than 4 zeros are detected on the F-bit of the 12nd frame during a 40 ms fixed window and this status persists for Nx40 ms. Here 'N' is decided by the YELDTH[7:0] bits.	More than 3 zeros are detected on the F-bit of the 12nd frame during a 40 ms fixed window and this status persists for Mx40 ms. Here 'M' is decided by the YELCTH[7:0] bits.	YEL	YELI	YELE
	J1 ESF Format	Less than 3 zeros are detected on the DL bits during a 40 ms fixed window and this status persists for Nx40 ms. Here 'N' is decided by the YELDTH[7:0] bits.	More than 2 zeros are detected on the DL bits during a 40 ms fixed window and this status persists for Mx40 ms. Here 'M' is decided by the YELCTH[7:0] bits.	YEL	YELI	YELE
Blue Alarm (per T1.231)		Less than 61 zeros are detected in a 40 ms fixed window and this status persists for Nx40 ms. Here 'N' is decided by the AISDTH[7:0] bits.	More than 60 zeros are detected in a 40 ms fixed window and this status persists for Mx40 ms. Here 'M' is decided by the AISCTH[7:0] bits.	AIS	AISI	AISE

Note: * The Yellow Alarm can only be detected when the frame is synchronized.

Table 27: Related Bit / Register In Chapter 3.10.1

Bit	Register	T1/J1 Address (Hex)
REDDTH[7:0]	RED Declare Threshold	0BC, 1BC, 2BC, 3BC
REDCTH[7:0]	RED Clear Threshold	0BD, 1BD, 2BD, 3BD
YELDTH[7:0]	Yellow Declare Threshold	0BE,1BE, 2BE, 3BE
YELCTH[7:0]	Yellow Clear Threshold	0BF, 1BF, 2BF, 3BF
AISDTH[7:0]	AIS Declare Threshold	0C0, 1C0, 2C0, 3C0
AISCTH[7:0]	AIS Clear Threshold	0C1, 1C1, 2C1, 3C1
RED	Alarm Status	0B9, 1B9, 2B9, 3B9
YEL		
AIS		
REDI	Alarm Indication	0BB, 1BB, 2BB, 3BB
YELI		
AISI		
REDE	Alarm Control	0BA, 1BA, 2BA, 3BA
YELE		
AISE		

3.10.2 E1 MODE

The Remote alarm, Remote Signaling Multi-Frame alarm, RED alarm, AIS alarm, AIS in TS16 and LOS in TS16 are detected in this block.

The Remote Alarm Indication bit is the A bit (refer to Table 18). It is detected on the base of Basic frame synchronization. The criteria of Remote alarm detection are defined by the RAIC bit. If the RAIC bit is '0', the Remote alarm will be declared when 4 consecutive A bits are received as '1', and the Remote alarm will be cleared when a single A bit is received as '0'. If the RAIC bit is '1', the Remote alarm will be declared when a single A bit is received as '1', and the Remote alarm will be cleared when a single A bit is received as '0'. The Remote alarm status is reflected by the RAIV bit. Any transition (from '0' to '1' or from '1' to '0') on the RAIV bit will set the RAII bit to '1' and the RAII bit will be cleared by writing a '1'. A '1' in the RAII bit means there is an interrupt. The interrupt will be reported by the $\overline{INT}$ pin if the RAIE bit is '1'.

The Remote Signaling Multi-Frame Alarm Indication bit is the Y bit (refer to Figure 11). It is detected on the base of CAS Signaling Multi-Frame synchronization. The Remote Signaling Multi-Frame alarm will be declared when 3 consecutive Y bits are received as '1', and the Remote Signaling Multi-Frame alarm will be cleared when a single Y bit is received as '0'. The Remote Signaling Multi-Frame alarm status is reflected by the RMAIV bit. Any transition (from '0' to '1' or from '1' to '0') on the RMAIV bit will set the RMAII bit to '1' and the RMAII bit will be cleared by writing a '1'. A '1' in the RMAII bit means there is an interrupt. The interrupt will be reported by the $\overline{INT}$ pin if the RMAIE bit is '1'.

The criteria of RED alarm detection meet I.431. The RED alarm will be declared when out of Basic frame synchronization persists for 100 ms, and the RED alarm will be cleared when in Basic frame synchronization persists for 100 ms. The RED alarm status is reflected by the RED bit. Any transition (from '0' to '1' or from '1' to '0') on the RED bit will set the REDI bit to '1' and the REDI bit will be cleared by writing a '1'. A '1' in the REDI bit means there is an interrupt. The interrupt will be reported by the $\overline{INT}$ pin if the REDE bit is '1'.

The AIS alarm is detected whether it is in synchronization or not. The criteria of AIS alarm are defined by the AISC bit. When the AISC bit is '0', the criteria meet I.431. The AIS alarm will be declared when less than 3 zeros are detected in a 512-bit fixed window and it is out of Basic frame synchronization, and the AIS alarm will be cleared when more than 2 zeros are detected in a 512-bit fixed window. When the AISC bit is '1', the criteria meet G.775. The AIS alarm will be declared when less than 3 zeros are detected in each of 2 consecutive 512-bit fixed windows, and the AIS alarm will be cleared when more than 2 zeros are detected in each of 2 consecutive 512-bit fixed windows. The AIS alarm status is reflected by the AIS bit. Any transition (from '0' to '1' or from '1' to '0') on the AIS bit will set the AISI bit to '1' and the AISI bit will be cleared by writing a '1'. A '1' in the AISI bit means there is an interrupt. The interrupt will be reported by the $\overline{INT}$ pin if the AISE bit is '1'.

The AIS in TS16 is detected on the base of Basic frame synchronization. The AIS in TS16 will be declared when TS16 contains less than 4 zeros in each of two 16-consecutive-Basic-frame periods. The AIS in TS16 will be cleared when TS16 contains more than 3 zeros in a 16-consecutive-Basic-frame period. The AIS in TS16 status is reflected by the TS16AISV bit. Any transition (from '0' to '1' or from '1' to '0') on the TS16AISV bit will set the TS16AISI bit to '1' and the TS16AISI bit will be cleared by writing a '1'. A '1' in the TS16AISI bit means there is an interrupt. The interrupt will be reported by the $\overline{INT}$ pin if the TS16AISE bit is '1'.

The LOS in TS16 is detected on the base of Basic frame synchronization. The LOS in TS16 will be declared when 16 consecutive TS16 are all received as '0'. The LOS in TS16 will be cleared when 16 consecutive TS16 are not all received as '0'. The LOS in TS16 status is reflected by the TS16LOSV bit. Any transition (from '0' to '1' or from '1' to '0') on the TS16LOSV bit will set the TS16LOSI bit to '1' and the TS16LOSI bit will be cleared by writing a '1'. A '1' in the TS16LOSI bit means there is an interrupt. The interrupt will be reported by the $\overline{INT}$ pin if the TS16LOSE bit is '1'.

Table 28: Related Bit / Register In Chapter 3.10.2

Bit	Register	E1 Address (Hex)
RAIC	Alarm Criteria Control	0BC, 1BC, 2BC, 3BC
AISC		
RAIV	Alarm Status	0B9, 1B9, 2B9, 3B9
RMAIV		
RED		
AIS		
TS16AISV		
TS16LOSV		
RAII	Alarm Indication	0BB, 1BB, 2BB, 3BB
RMAII		
REDI		
AISI		
TS16AISI		
TS16LOSI		
RAIE	Alarm Control	0BA, 1BA, 2BA, 3BA
RMAIE		
REDE		
AISE		
TS16AISE		
TS16LOSE		

3.11 HDLC RECEIVER

The HDLC Receiver extracts the HDLC/SS7 data stream from the selected position and processes the data according to the selected mode.

3.11.1 HDLC CHANNEL CONFIGURATION

In T1/J1 mode ESF & T1 DM formats, three HDLC Receivers (#1, #2 & #3) per link are provided for HDLC extraction from the received data stream. In T1/J1 mode SF & SLC-96 formats, two HDLC Receivers (#2 & #3) per link are provided for HDLC extraction. In E1 mode, three HDLC Receivers (#1, #2 & #3) per link are provided for HDLC extraction. Except in T1/J1 mode ESF & T1 DM formats, the HDLC channel of HDLC #1 is fixed in the DL bit (in ESF format) and D bit in CH24 (in T1 DM format) respectively (refer to Table 13 & Table 14), the other HDLC channels are configured as follows:

1. Set the EVEN bit and/or the ODD bit to select the even and/or odd frames;
2. Set the TS[4:0] bits to define the channel/timeslot of the assigned frame;
3. Set the BITEN[7:0] bits to select the bits of the assigned channel/timeslot.

Then all the functions of the HDLC Receiver will be enabled only if the corresponding RDLEN bit is set to '1'.

Table 29: Related Bit / Register In Chapter 3.11.1

Bit	Register	Address (Hex)
EVEN	RHDLC1 Assignment (E1 only) / RHDLC2 Assignment / RHDLC3 Assignment	08C, 18C, 28C, 38C (E1 only) / 08D, 18D, 28D, 38D / 08E, 18E, 28E, 38E
ODD		
TS[4:0]		
BITEN[7:0]	RHDLC1 Bit Select (E1 only) / RHDLC2 Bit Select / RHDLC3 Bit Select	08F, 18F, 28F, 38F (E1 only) / 090, 190, 290, 390 / 091, 191, 291, 391
RDLEN3	RHDLC Enable Control	08B, 18B, 28B, 38B
RDLEN2		
RDLEN1		

3.11.2 TWO HDLC MODES

Two modes are selected by the RHDLCM bit in the corresponding HDLC Receiver. The two modes are: HDLC mode (per Q.921) and SS7 mode (per Q.703).

3.11.2.1 HDLC Mode

The structure of a standard HDLC packet consists of the following parts as shown in Figure 12. Each HDLC packet starts with a 7E (Hex) opening flag and ends with the same flag. The closing flag may also serve as the opening flag of the next HDLC packet. Following the opening flag, two-byte address is compared if the address comparison mode is selected. Before the closing flag, two bytes of CRC-CCITT frame check sequences (FCS) are provided to check all the HDLC packet (excluding the opening flag and closing flag).

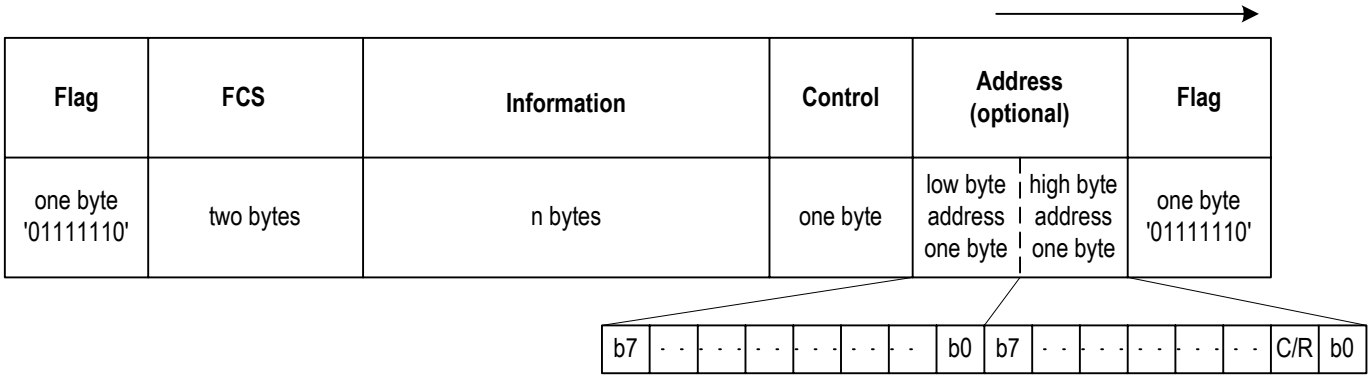

Figure 12. Standard HDLC Packet

After the stuffed zero (the zero following five consecutive 'One's) is discarded, the data stream between the opening flag and the FCS is divided into blocks. Each block (except the last block) has 32 bytes. The block will be pushed into a FIFO with one-byte overhead ahead until any of the following invalid packet conditions occurs:

- A packet with error FCS;

- The data between the opening flag and the closing flag is less than 5 bytes (including the FCS, excluding the flags);

- The extracted HDLC packet does not consist of an integral number of octets;

- A 7F (Hex) abort sequence is received;

- Address is not matched if the address comparison is enabled. (The address comparison mode is selected by the ADRM[1:0] bits. If high byte address comparison is required, the high byte address position (the byte following the opening flag) is compared with the value in the HA[7:0] bits, or with ‘0xFC’ or ‘0xFE’. Here the ‘C/R’ bit position is excluded to compare. If low byte address comparison is required, the high byte address position is compared with the value in the LA[7:0] bits. Here the ‘C/R’ bit position is included to compare. If both bytes address comparison is required, the high byte address position is compared with the value in the HA[7:0] bits, or with ‘0xFC’ or ‘0xFE’. Here the ‘C/R’ bit position is excluded to compare. And the low byte position (the byte following the high byte address position) is compared with the value in the LA[7:0] bits.

If any of the above conditions is detected, the current block will be discarded, but the one-byte overhead will still be written into the FIFO. The overhead consists of the M[2:0] bits and the length indication bits as shown in Figure 13.

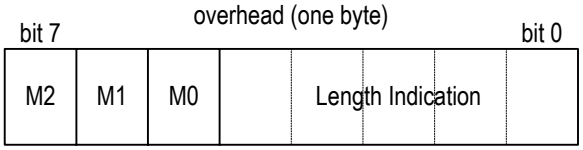

M[2:0]:
= 000: A valid short HDLC/SS7 packet is received, i.e., the data stream between the opening flag and the FCS is less than 32 bytes (including 32 bytes).
= 001: The current block is not the last block of the HDLC/SS7 packet.
= 010: The current block is the last block of a valid long (more than 32 bytes) HDLC/SS7 packet.
= 011: Reserved.
= 100: An invalid short HDLC/SS7 packet is received and the current block is discarded.
= 101: The current block is the last block of an invalid long HDLC/SS7 packet and the block is discarded.
= 110: Reserved.
= 111: Reserved.

The Length Indication is valid when the M2 bit is zero: Length Indication = N - 1 (N is the number of byte).
Otherwise, the Length Indication is zero.

Figure 13. Overhead Indication In The FIFO

The FIFO depth is 128 bytes. The FIFO is accessed by the DAT[7:0] bits. When the overhead is read from the FIFO, it will be indicated by the PACK bit. When all valid HDLC blocks are pushed into the FIFO or all the blocks are read from the FIFO, it will be indicated by the EMP bit.

The interrupt sources in this block are summarized in Table 30. When there are conditions meeting the interrupt sources, the corresponding Interrupt Indication bit will be set to ‘1’ and the Interrupt Indication bit will be cleared by writing a ‘1’. A ‘1’ in the Interrupt Indication bit means there is an interrupt. The interrupt will be reported by the $\overline{INT}$ pin if its Interrupt Enable bit is ‘1’.

Table 30: Interrupt Summarize In HDLC Mode

Sources	Interrupt Indication Bit	Interrupt Enable Bit
A block is pushed into the FIFO.	RMBEI	RMBEE
Data is still attempted to write into the FIFO when the FIFO has been already full (128 bytes).	OVFLI	OVFLE

The HDLC Receiver will be reset when there is a transition from ‘0’ to ‘1’ on the RRST bit. The reset will clear the FIFO, the PACK bit and the EMP bit.

3.11.2.2 SS7 Mode

In SS7 mode, there are three kinds of signaling units - MSU, LSSU and FISU (refer to Figure 14). Their opening flag and closing flag are both 7E (Hex). The closing flag may also serve as the opening flag of the next HDLC packet.

Message Signaling Unit (MSU)

Flag	FCS	Signaling Field	Service Information Octet		Length Indication	Forward Indication Bit	Forward Sequence Number	Backward Indication Bit	Backward Sequence Number	Flag
one byte '01111110'	two bytes	n bytes (n>1)	one byte	two bits	six bits (> 2)	one bit	seven bits	one bit	seven bits	one byte '01111110'

Link Status Signaling Unit (LSSU)

Flag	FCS	Status		Length Indication	Forward Indication Bit	Forward Sequence Number	Backward Indication Bit	Backward Sequence Number	Flag
one byte '01111110'	two bytes	one or two bytes	two bits	six bits (= 1 or 2)	one bit	seven bits	one bit	seven bits	one byte '01111110'

Fill In Signaling Unit (FISU)

Flag	FCS		Length Indication	Forward Indication Bit	Forward Sequence Number	Backward Indication Bit	Backward Sequence Number	Flag
one byte '01111110'	two bytes	two bits	six bits (= 0)	one bit	seven bits	one bit	seven bits	one byte '01111110'

Figure 14. Standard SS7 Packet

After the stuffed zero (the zero following five consecutive 'One's) is discarded, the extracted SS7 data stream is compared with the standard SS7 packet. If the value of the 6-bit length indication is equal to '0', the SS7 packet is FISU; if it is equal to '1' or '2', the SS7 packet is LSSU; if it is more than '2', the SS7 packet is MSU.

The data stream between the opening flag and the FCS are divided into blocks. Each block (except the last block) has 32 bytes. The block will be pushed into a FIFO with one-byte overhead until any of the following invalid packet conditions occurs:

- A packet with error FCS;
- The data between the opening flag and the closing flag is less than 5 bytes (including the FCS, excluding the flags);
- The extracted SS7 packet does not consist of an integral number of octets;
- A 7F (Hex) abort sequence is received;
- If the SS7 packet is FISU, the data between the opening flag and the closing flag is not 5 bytes (including the FCS, excluding the flags);
- If the SS7 packet is LSSU, the data between the opening flag and the closing flag is not 6 or 7 bytes (including the FCS, excluding the flags);
- If the SS7 packet is MSU, the data between the opening flag and the closing flag is less than 8 bytes or more than 271 bytes (including the FCS, excluding the flags).

If any of the above conditions is detected, the current block will be discarded, but the one-byte overhead will still be written into the FIFO. The overhead consists of the M[2:0] bits and the length indication bits as shown in Figure 13. In FISU/LSSU, if the FISU/LSSU filter is set by the FISUFIL/LSSUFIL bit respectively, the current FISU/LSSU will be discarded if it is the same with the previous FISU/LSSU. In this condition, no data and overhead of the current FISU/LSSU will be written into the FIFO.

The FIFO depth is 128 bytes. The FIFO is accessed by the DAT[7:0] bits. When the overhead is read from the FIFO, it will be indicated by the PACK bit. When all valid SS7 blocks are pushed into the FIFO or all the blocks are read from the FIFO, it will be indicated by the EMP bit.

The interrupt sources in this block are summarized in the Table 30. When there are conditions meeting the interrupt sources, the corresponding Interrupt Indication bit will be set to '1' and the Interrupt Indication bit will be cleared by writing a '1'. A '1' in the Interrupt Indication bit

means there is an interrupt. The interrupt will be reported by the $\overline{INT}$ pin if its Interrupt Enable bit is ‘1’.

The HDLC Receiver will be reset when there is a transition from ‘0’ to ‘1’ on the RRST bit. The reset will clear the FIFO, the PACK bit and the EMP bit.

Table 31: Related Bit / Register In Chapter 3.11.2

Bit	Register	Address (Hex)
RHDLCM	RHDLC1 Control Register / RHDLC2 Control Register / RHDLC3 Control Register	092, 192, 292, 392 / 093, 193, 293, 393 / 094, 194, 294, 394
ADRM[1:0]		
RRST		
FISUFIL		
LSSUFIL		
HA[7:0]	RHDLC1 High Address / RHDLC2 High Address / RHDLC3 High Address	0A1, 1A1, 2A1, 3A1 / 0A2, 1A2, 2A2, 3A2 / 0A3, 1A3, 2A3, 3A3
LA[7:0]	RHDLC1 Low Address / RHDLC2 Low Address / RHDLC3 Low Address	0A4, 1A4, 2A4, 3A4 / 0A5, 1A5, 2A5, 3A5 / 0A6, 1A6, 2A6, 3A6
DAT[7:0]	RHDLC1 Data / RHDLC2 Data / RHDLC3 Data	098, 198, 298, 398 / 099, 199, 299, 399 / 09A, 19A, 29A, 39A, 49A
PACK	RHDLC1 RFIFO Access Status /	095, 195, 295, 395 / 096, 196, 296, 396 / 097, 197, 297, 397
EMP		
RMBEI	RHDLC1 Interrupt Indication / RHDLC2 Interrupt Indication / RHDLC3 Interrupt Indication	09E, 19E, 29E, 39E / 09F, 19F, 29F, 39F / 0A0, 1A0, 2A0, 3A0
OVFLI		
RMBEE	RHDLC1 Interrupt Control / RHDLC2 Interrupt Control / RHDLC3 Interrupt Control	09B, 19B, 29B, 39B / 09C, 19C, 29C, 39C / 09D, 19D, 29D, 39D
OVFLE		

3.12 BIT-ORIENTED MESSAGE RECEIVER (T1/J1 ONLY)

The Bit-Oriented Message (BOM) can only be received in the ESF format in T1/J1 mode.

The BOM pattern is '111111110XXXXXX0' which occupies the DL of the F-bit in the ESF format (refer to Table 13). The six 'X's represent the message. The BOM is declared only when the pattern is matched and the received message is identical 4 out of 5 consecutive times or 8 out of 10 consecutive times and differs from the previous message. The identification time is selected by the AVC bit. After a new BOM is declared, the message is loaded into the BOC[5:0] bits. Every time when the BOC[5:0] bits are updated, it will be indicated by the BOCI bit. A '1' in the BOCI bit means there is an interrupt. The interrupt will be reported by the $\overline{INT}$ pin if the BOCE bit is '1'.

Table 32: Related Bit / Register In Chapter 3.12

Bit	Register	T1/J1 Address (Hex)
AVC	BOC Control	081, 181, 281, 381
BOCE		
BOC[5:0]	RBOC Code	083, 183, 283, 383
BOCI	BOC Interrupt Indication	082, 182, 282, 382

3.13 INBAND LOOPBACK CODE DETECTOR (T1/J1 ONLY)

The Inband Loopback Code Detector tracks the loopback activate/deactivate codes only in framed or unframed T1/J1 data stream, and meets ANSI T1.403 9.3.1.

The received data stream is compared with the target activate/deactivate code whose length and content are programmed in the ASEL[1:0]/DSEL[1:0] bits and the ACT[7:0]/DACT[7:0] bits respectively. In framed mode, the F-bit is selected by the IBCDIDLE bit to compare with the target activate/deactivate code or not. In unframed mode, all 193 bits are compared with the target activate/deactivate code.

After four consecutive correct activate/deactivate codes are found in the received data stream, the Inband Loopback Code Detector keeps on monitoring the bit error, i.e., the bit differs from the target activate/deactivate code. If in more than 126 consecutive 39.8ms fixed periods, less than 600 bit errors are detected in each 39.8ms, the activate/deactivate code is detected and the corresponding LBA/LBD bit will indicate it. Once more than 600 bit errors are detected in a 39.8ms fixed period, the activate/deactivate code is out of synchronization and the corresponding LBA/LBD bit will be cleared. However, even if the F-bit is compared, whether it is matched or not, the result will not cause bit errors, that is, the comparison result of the F-bit is discarded.

Any transition (from '0' to '1' or from '1' to '0') on the LBA/LBD bit will set the LBAI/LBDI bit, which means there is an interrupt. The interrupt will be reported by the $\overline{INT}$ pin if the corresponding LBAE/LBDE bit is set to '1'.

Table 33: Related Bit / Register In Chapter 3.13

Bit	Register	T1/J1 Address (Hex)
ASEL[1:0]	IBCD Detector Configuration	076, 176, 276, 376
DSEL[1:0]		
IBCDIDLE		
ACT[7:0]	IBCD Activate Code	078, 178, 278, 378
DACT[7:0]	IBCD Deactivate Code	079, 179, 279, 379
LBA	IBCD Detector Status	077, 177, 277, 377
LBD		
LBAI	IBCD Interrupt Indication	07B, 17B, 27B, 37B
LBDI		
LBAE	IBCD Interrupt Control	07A, 17A, 27A, 37A
LBDE		

3.14 ELASTIC STORE BUFFER

In Receive Clock Slave mode and Receive Multiplexed mode, a 2-basic-frame depth Elastic Store Buffer is used to synchronize the incoming frames to the (Multiplexed) Receive Side System Clock derived from the RSCKn/MRSCK pin, and to the (Multiplexed) Receive Side System Frame Pulse derived from the RSFSn/MRSFS pin. A write pointer is used to write the data to the Elastic Store Buffer, while a read pointer is used to read the data from the Elastic Store Buffer.

When the average frequency of the incoming data is greater than the average frequency of the (Multiplexed) Receive Side System Clock (RSCKn/MRSCK), the write pointer will be faster than the read pointer and the Elastic Store Buffer will be filled. Until there is less than or equal to 2 bytes between the write pointer and the read pointer, a frame will be deleted after its prior frame is read. When the read pointer crosses the frame boundary, a controlled slip will occur with a ‘1’ indicated in the SLIPD bit.

When the average frequency of the incoming data is less than the average frequency of the RSCKn/MRSCK, the write pointer will be slower than the read pointer and the Elastic Store Buffer will be empty. Until there is less than or equal to 2 bytes between the write pointer and the read pointer, the frame will be repeated after it is read. When the read pointer crosses the next frame boundary, a controlled slip will occur with a ‘0’ indicated in the SLIPD bit.

When the slip occurs, the SLIPI bit will indicate it. An interrupt on the $\overline{\text{INT}}$ pin will occur if the SLIPE bit is ‘1’.

In Receive Clock Slave mode and Receive Multiplexed mode, if it is out of synchronization, the trunk code programmed in the TRKCODE[7:0] bits will be set to replace the data if the TRKEN bit is set to ‘1’.

In Receive Clock Master mode, the Elastic Store Buffer is bypassed unless the device is in the Payload Loopback diagnosis mode (refer to Chapter 3.27.2.2 Payload Loopback).

Table 34: Related Bit / Register In Chapter 3.14

Bit	Register	Address (Hex)
SLIPD	ELST Configuration	07C, 17C, 27C, 37C
SLIPE		
TRKEN		
SLIPI	ELST Interrupt Indication	07D, 17D, 27D, 37D
TRKCODE[7:0]	ELST Trunk Code	07E, 17E, 27E, 37E

3.15 RECEIVE CAS/RBS BUFFER

The Receive CAS/RBS Buffer extracts the signaling bits from the received data stream.

3.15.1 T1/J1 MODE

In SF/ESF/SLC-96 format, the signaling bits are located in the Bit 8 of Frame 6n (n = 1,2 in SF format; $1 \leq n \leq 4$ in ESF format; $1 \leq n \leq 12$ in SLC-96 format) (refer to Table 12, Table 13 and Table 15 respectively). The signaling codewords (AB or ABCD) are clocked out on the RSIGn/MRSIGA(MRSIGB) pins. They are in the lower nibble of the channel with its corresponding data serializing on the RSDn/MRSDA(MRSIGB) pins (as shown in Figure 15).

When the EXTRACT bit is set to ‘1’, the signaling bits in its corresponding channel are extracted to the A,B,C,D bits in the Extracted Signaling Data/Extract Enable register. In SF format, the C,D bits in the register are the repetition of the signaling bits A,B. The data in the A,B,C,D bits in the Extracted Signaling Data/Extract Enable register are the data to be output on the RSIGn/MRSIGA(MRSIGB) pins. However, in T1-DM format, there is no signaling bits.

Signaling de-bounce will be executed when the DEB bit is set to ‘1’. Thus, the A,B,C,D bits in the Extracted Signaling Data/Extract Enable register are updated only if 2 consecutive received AB/ABCD codewords of the same channel are identical.

Signaling freezing is performed automatically when it is out of frame synchronization or when slips occurs in the Elastic Store Buffer. It is also performed when the FREEZE bit is set to ‘1’. The signaling freezing freezes the signaling data in the A,B,C,D bits in the Extracted Signaling Data/Extract Enable register as the previous valid value.

In the ESF and SLC-96 format, if the SIGF bit is set to ‘0’, the extracted signaling bits are in 4 states signaling, i.e., the signaling bits on Framer 6 & 18 of a signaling multi-frame are recognized as ‘A’ and the signaling bits on Framer 12 & 24 are recognized as ‘B’. Only the signaling bits A & B will be saved in the Extracted Signaling Data/Extract Enable register, and the C & D bits in the Extracted Signaling Data/Extract Enable register are Don’t-Care. If the SIGF bit is set to ‘1’, the extracted signaling bits are in 16 states signaling, i.e., four signaling bits A, B, C & D are all saved in the Extracted Signaling Data/Extract Enable register.

Each time the extracted signaling bits stored in the Extracted Signaling Data/Extract Enable register are changed, it is captured by the corresponding COSI[X] bit ($1 \leq X \leq 24$). When the SIGE bit is set to ‘1’, any one of the COSI[X] bits being ‘1’ will generate an interrupt and will be reported by the $\overline{\text{INT}}$ pin.

The EXTRACT bit and the A,B,C,D bits are in the indirect registers of the Receive CAS/RBS Buffer. They are accessed by specifying the address in the ADDRESS[6:0] bits. Whether the data is read from or written into the specified indirect register is determined by the RWN bit and the data is in the D[7:0] bits. The access status is indicated in the BUSY bit. Refer to Chapter 4.5 Indirect Register Access Scheme for details about the indirect registers write/read access.

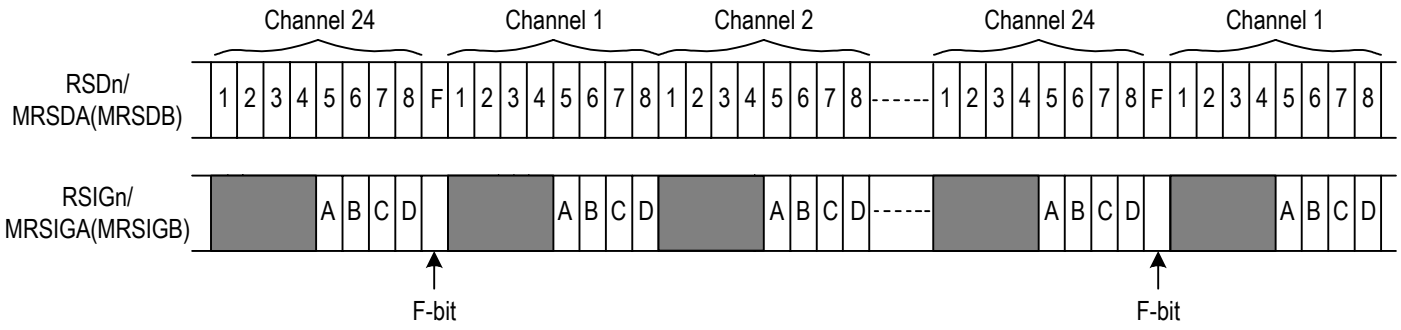

Figure 15. Signaling Output In T1/J1 Mode

3.15.2 E1 MODE

In Signaling Multi-Frame, the signaling bits are located in TS16 (refer to Figure 11), which are Channel Associated Signalings (CAS). The signaling codewords (ABCD) are clocked out on the RSIGn/MRSIGA(MRSIGB) pins. They are in the lower nibble of the timeslot with its corresponding data serializing on the RSDn/MRSDA(MRSDB) pins (as shown in Figure 16).

When the EXTRACT bit is set to '1', the signaling bits in its corresponding timeslot are extracted to the A,B,C,D bits in the Extracted Signaling Data/Extract Enable register. The data in the A,B,C,D bits in the register are the data to be output on the RSIGn/MRSIGA(MRSIGB) pins. The bits corresponding to TS0 and TS16 output on the RSIGn/MRSIGA(MRSIGB) pins are Don't-Care.

Signaling de-bounce will be executed when the DEB bit is set to '1'. Thus, the A,B,C,D bits in the Extracted Signaling Data/Extract Enable register are updated only if 2 consecutive received ABCD codewords of the same timeslot are identical.

Signaling freezing is performed automatically when it is out of Basic frame synchronization, out of Signaling multi-frame synchronization or slips occurs in the Elastic Store Buffer. It is also performed when the FREEZE bit is set to '1'. The signaling freezing freezes the signaling data in the A,B,C,D bits in the Extracted Signaling Data/Extract Enable register as the previous valid value.

Each time the extracted signaling bits in the A,B,C,D bits in the Extracted Signaling Data/Extract Enable register are changed, it is captured by the corresponding COSI[X] bit ($1 \leq X \leq 30$). When the SIGE bit is set to '1', any one of the COSI[X] bits being '1' will generate an interrupt and will be reported by the $\overline{\text{INT}}$ pin.

The EXTRACT bit and the A,B,C,D bits are in the indirect registers of the Receive CAS/RBS Buffer. They are accessed by specifying the address in the ADDRESS[6:0] bits. Whether the data is read from or written into the specified indirect register is determined by the RWN bit and the data is in the D[7:0] bits. The access status is indicated in the BUSY bit. Refer to Chapter 4.5 Indirect Register Access Scheme for details about the indirect registers write/read access.

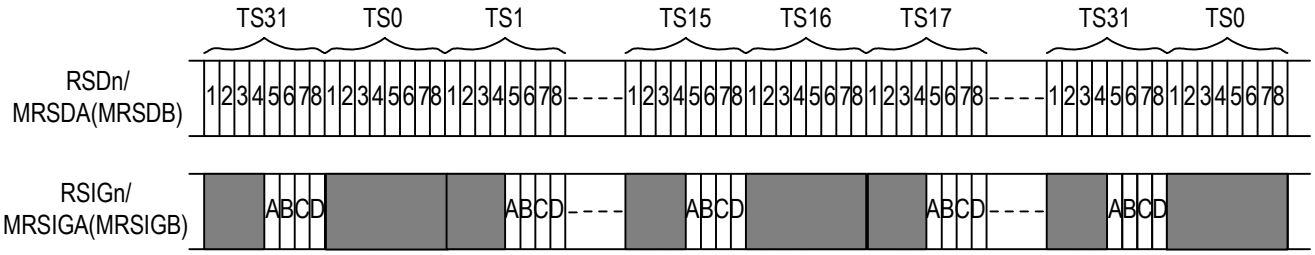

Figure 16. Signaling Output In E1 Mode

Table 35: Related Bit / Register In Chapter 3.15

Bit	Register	Address (Hex)
EXTRACT	ID* - Extracted Signaling Data/Extract Enable	RCRB ID - 01~18 (for T1/J1) / 01~0F & 11~1F (for E1)
A,B,C,D		
DEB	RCRB Configuration	0D2, 1D2, 2D2, 3D2
FREEZE		
SIGF (T1/J1 only)		
SIGE		
COSI[X] ($1 \leq X \leq 24$ in T1/J1) ($1 \leq X \leq 30$ in E1)	RCRB State Change Indication 3 (E1 only) & RCRB State Change Indication 2 ~ 0	0D9, 1D9, 2D9, 3D9 (E1 only) & 0D8, 1D8, 2D8, 3D8 & 0D7, 1D7, 2D7, 3D7 & 0D6, 1D6, 2D6, 3D6
ADDRESS[6:0]	RCRB Access Control	0D4, 1D4, 2D4, 3D4
RWN		
D[7:0]	RCRB Access Data	0D5, 1D5, 2D5, 3D5
BUSY	RCRB Access Status	0D3, 1D3, 2D3, 3D3

Note:
* ID means Indirect Register in the Receive CAS/RBS Buffer function block.

3.16 RECEIVE PAYLOAD CONTROL

Different test patterns can be inserted in the received data stream or the received data stream can be extracted to the PRBS Generator/ Detector for test in this block.

To enable all the functions in the Receive Payload Control, the PCCE bit must be set to '1'.

The following methods can be executed on the data to be output on the RSDn/MRSDA(MRSDB) pins on a per-channel/per-TS basis or on a global basis of the corresponding link (the methods are arranged from the highest to the lowest in priority):

- When the TESTEN bit is enabled and the PRBSDIR bit is '0', the received data will be extracted to the PRBS Generator/Detector. The received data can be extracted in unframed mode, in 8-bit-based mode or in 7-bit-based mode. This selection is made by the PRBSMODE[1:0] bits. In unframed mode, all the received data stream is extracted and the per-channel/per-TS configuration in the TEST bit is ignored. In 8-bit-based mode or in 7-bit-based mode, the received data will only be extracted on the channel/timeslot configured by the TEST bit. Refer to Chapter 3.27.1 PRBS Generator / Detector for details.

- Selected by the GSUBST[2:0] bits, the data of all channels/ timeslots of the corresponding link will be replaced by the data trunk code set in the DTRK[7:0] bits, or the milliwatt pattern defined in the Table 36 and Table 37. When the GSUBST[2:0] bits are set to '000', these replacements will be performed on a per-channel/per-TS basis by setting the SUBST[2:0] bits in the corresponding channel/timeslot.

- When the SIGFIX bit is set to '1', the signaling bits (ABCD) will be fixed to the value set in the POL bit. This function is only supported in the SF, ESF and SLC-96 formats in T1/J1 mode.

- Invert the most significant bit, the even bits and/or the odd bits by setting the SINV, OINV, EINV bits.

- When the TESTEN bit is enabled and the PRBSDIR bit is '1', the received data will be replaced by the test pattern generated from the PRBS Generator/Detector. The received data can be replaced in unframed mode, in 8-bit-based mode or in 7-bit-based mode. This selection is made by the PRBSMODE[1:0] bits. In unframed mode, all the received data stream is replaced and the per-channel/per-TS configuration in the TEST bit is ignored. In 8-bit-based mode or in 7-bit-based mode, the received data will only be replaced on the channel/timeslot configured by the TEST bit. Refer to Chapter 3.27.1 PRBS Generator / Detector for details.

Table 36: A-Law Digital Milliwatt Pattern

	Bit 0	Bit 1	Bit 2	Bit 3	Bit 4	Bit 5	Bit 6	Bit 7
Byte 1	0	0	1	1	0	1	0	0
Byte 2	0	0	1	0	0	0	0	1
Byte 3	0	0	1	0	0	0	0	1
Byte 4	0	0	1	1	0	1	0	0
Byte 5	1	0	1	1	0	1	0	0
Byte 6	1	0	1	0	0	0	0	1
Byte 7	1	0	1	0	0	0	0	1
Byte 8	1	0	1	1	0	1	0	0

Table 37: µ-Law Digital Milliwatt Pattern

	Bit 0	Bit 1	Bit 2	Bit 3	Bit 4	Bit 5	Bit 6	Bit 7
Byte 1	0	0	0	1	1	1	1	0
Byte 2	0	0	0	0	1	0	1	1
Byte 3	0	0	0	0	1	0	1	1
Byte 4	0	0	0	1	1	1	1	0
Byte 5	1	0	0	1	1	1	1	0
Byte 6	1	0	0	0	1	0	1	1
Byte 7	1	0	0	0	1	0	1	1
Byte 8	1	0	0	1	1	1	1	0

The following methods can be executed on the signaling bits to be output on the RSIGn/MRSIGA(MRSIGB) pins on a per-channel/per-TS basis or on a global basis of the corresponding link (the methods are arranged from the highest to the lowest in priority):

- Selected by the ABXX bit, the signaling bits can be valid in the upper 2-bit positions of the lower nibble of each channel or in the lower nibble of each channel. The other bits of the channel are Don't Care conditions. This function is only supported in T1/J1 mode ESF/SLC-96 format.

- Enabled by the SIGSNAP bit, the signaling snapshot will be executed. The signaling snapshot means that the signaling bits of the first basic frame are locked and output as the signaling bits of the current whole multi-frame. This function is not supported in T1 DM format.

- Enabled by the GSTRKEN bit, the signaling bits (ABCD) of all channels/timeslots of the corresponding link will be replaced by the signaling trunk conditioning code in the A,B,C,D bits. When the GSTRKEN bit is '0', the replacement will be performed on a per-channel/per-TS basis by setting the STRKEN bit in the corresponding channel/timeslot.

The indirect registers of the Receive Payload Control are accessed by specifying the address in the ADDRESS[6:0] bits. Whether the data is

read from or written into the specified indirect register is determined by the RWN bit and the data is in the D[7:0] bits. The access status is indicated in the BUSY bit. Refer to Chapter 4.5 Indirect Register Access Scheme for details about the indirect registers write/read access.

Table 38: Related Bit / Register In Chapter 3.16

Bit	Register	Address (Hex)
PCCE	RPLC Control Enable	0D1, 1D1, 2D1, 3D1
SIGFIX (T1/J1 only)		
POL (T1/J1 only)		
ABXX (T1/J1 only)		
TESTEN	TPLC / RPLC / PRGD Test Configuration	0C7, 1C7, 2C7, 3C7
PRBSDIR		
PRBSMODE[1:0]		
TEST	ID * - Signaling Trunk Conditioning Code	RPLC ID - 41~58 (for T1/J1) / 41~4F & 51~5F (for E1)
STRKEN		
A,B,C,D		
GSUBST[2:0]	RPLC Configuration	0D0, 1D0, 2D0, 3D0
SIGSNAP		
GSTRKEN		
DTRK[7:0]	ID - Data Trunk Conditioning Code	RPLC ID - 21~38 (for T1/J1) / 20~3F (for E1)
SUBST[2:0]	ID - Channel Control (for T1/J1) / Timeslot Control (for E1)	RPLC ID - 01~18 (for T1/J1) / 00~1F (for E1)
SINV		
OINV		
EINV		
ADDRESS[6:0]	RPLC Access Control	0CE, 1CE, 2CE, 3CE
RWN		
D[7:0]	RPLC Access Data	0CF, 1CF, 2CF, 3CF
BUSY	RPLC Access Status	0CD, 1CD, 2CD, 3CD

Note:
* ID means Indirect Register in the Receive Payload Control function block.

3.17 RECEIVE SYSTEM INTERFACE

The Receive System Interface determines how to output the received data stream to the system backplane. The data from the four links can be aligned with each other or be output independently. The timing clocks and framing pulses can be provided by the system backplane or obtained from the far end. The Receive System Interface supports various configurations to meet various requirements in different applications.

3.17.1 T1/J1 MODE

In T1/J1 mode, the Receive System Interface can be set in Non-multiplexed Mode or Multiplexed Mode. In the Non-multiplexed Mode, the RSDn pin is used to output the received data from each link at the bit rate of 1.544 Mb/s or 2.048 Mb/s (T1/J1 mode E1 rate). While in the Multiplexed Mode, the received data from the four links is converted to 2.048 Mb/s format and byte interleaved to form one high speed data stream and output on the MRSDA1 (MRSDB1) pins at the bit rate of 8.192 Mb/s.

In the Non-multiplexed Mode, if the receive system interface and the receive line side are timed to a same clock source, the Receive System Interface is in Receive Clock Master mode. If the receive system interface and the receive line side are timed to different clock sources, the Receive System Interface is in Receive Clock Slave mode.

In the Receive Clock Master mode, if RSCKn outputs pulses during the entire T1/J1 frame, the Receive System Interface is in Receive Clock Master Full T1/J1 mode. If only the clocks aligned to the selected channels are output on RSCKn, the Receive System Interface is in Receive Clock Master Fractional T1/J1 mode.

In the Receive Clock Slave mode, the backplane data rate may be equal to 1.544 Mb/s (i.e., the line data rate) or 2.048 Mb/s. If the backplane data rate is 2.048 Mb/s, the Receive System Interface is in T1/J1 mode E1 rate and the received data stream (1.544 Mb/s) should be mapped per 3 kinds of schemes.

In the Receive Multiplexed mode, since the received data from the four links should be converted to 2.048 Mb/s format first and then multiplexed to 8.192 Mb/s, there are still 3 kinds of schemes to be selected.

Table 39 summarizes how to set the Receive System Interface of each link into various operating modes and the pins' direction of the Receive System Interface in different operating modes.

Table 39: Operating Modes Selection In T1/J1 Receive Path

RMUX	RMODE	G56K, GAP / FBITGAP	MAP[1:0] [2]	Operating Mode	Receive System Interface Pin	
					Input	Output
0	0	00 / 0	X	Receive Clock Master Full T1/J1	X	RSCKn, RSFSn, RSDn, RSIGn
		not all 0s [1]		Receive Clock Master Fractional T1/J1		
	1	X	00	Receive Clock Slave - T1/J1 Rate	RSCKn, RSFSn	RSDn, RSIGn
			01	Receive Clock Slave - T1/J1 Mode E1 Rate per G.802		
			10	Receive Clock Slave - T1/J1 Mode E1 Rate per One Filler Every Four CHs		
			11	Receive Clock Slave - T1/J1 Mode E1 Rate per Continuous CHs		
1	X	X	01	Receive Multiplexed - T1/J1 Mode E1 Rate per G.802	MRSCK, MRSFS	MRSDA[1], MRSIGA[1] (MRSDB[1], MRSIGB[1]) [3]
			10	Receive Multiplexed - T1/J1 Mode E1 Rate per One Filler Every Four CHs		
			11	Receive Multiplexed - T1/J1 Mode E1 Rate per Continuous CHs		

NOTE:
1. When the G56K, GAP bits in RPLC indirect registers are set, the PCCE bit must be set to '1'.
2. The MAP[1:0] bits can not be set to '00' in the Receive Multiplexed mode.
3. In Receive Multiplexed mode, two sets of multiplexed data and signaling pins (A and B) are provided. Their functions are the same. One is the backup for the other.

3.17.1.1 Receive Clock Master Mode

In the Receive Clock Master mode, each link uses its own timing signal on the RSCKn pin and framing pulse on the RSFSn pin to output the data on each RSDn pin. The signaling bits on the RSIGn pin are per-channel aligned with the data on the RSDn pin.

In the Receive Clock Master mode, the data on the system interface is clocked by the RSCKn. The active edge of the RSCKn used to update the pulse on the RSFSn is determined by the FE bit. The active edge of the RSCKn used to update the data on the RSDn and RSIGn is determined by the DE bit. If the FE bit and the DE bit are not equal, the pulse on the RSFSn is ahead.

In the Receive Clock Master mode, the RSFSn can indicate each F-bit or the first F-bit of every SF/ESF/T1 DM/SLC-96 multi-frame. In SF format, the RSFSn can also indicate every second F-bit or the first F-bit of every second SF multi-frame. All the indications are selected by the CMFS bit and the ALTIFS bit. The active polarity of the RSFSn is selected by the FSINV bit.

The Receive Clock Master mode includes two sub-modes: Receive Clock Master Full T1/J1 mode and Receive Clock Master Fractional T1/J1 mode.

3.17.1.1.1 Receive Clock Master Full T1/J1 Mode

Besides all the common functions described in the Receive Clock Master mode, the special feature in this mode is that the RSCKn is a standard 1.544 MHz clock, and the data in the F-bit and all 24 channels in a standard T1/J1 frame are clocked out by the RSCKn.

3.17.1.1.2 Receive Clock Master Fractional T1/J1 Mode

Besides all the common functions described in the Receive Clock Master mode, the special feature in this mode is that the RSCKn is a gapped 1.544 MHz clock (no clock signal during the selected position).

The RSCKn is gapped during the F-bit if the FBITGAP bit is set to '1'. The RSCKn is also gapped during the channels or the Bit 8 duration by selecting the G56K & GAP bits in the Receive Payload Control. The data in the corresponding gapped duration is a don't care condition.

3.17.1.2 Receive Clock Slave Mode

In the Receive Clock Slave mode, the system data rate can be 1.544 Mb/s or 2.048 Mb/s. If the system data rate is 1.544 Mb/s, it works in T1/J1 mode. If the system data rate is 2.048 Mb/s, the received data stream (1.544 Mb/s) should be mapped to the same rate as the system side, that is, to work in T1/J1 mode E1 rate. Three kinds of schemes are provided by selecting the MAP[1:0] bits:

1. T1/J1 Mode E1 Rate per G.802 (refer to Figure 17): Channel 1 to Channel 15 of Frame N from the device are converted into TS1 to TS15 of Frame N on the system side; Channel 16 to Channel 24 of Frame N from the device are converted into TS17 to TS25 of Frame N on the system side. The F-bit of Frame N from the device is converted into the first bit of TS26 of Frame (N-1) on the system side. TS0, TS16, TS27~TS31 and the other 7 bits in TS26 on the system side are all filled with '0's and they are meaningless.

2. T1/J1 Mode E1 Rate per One Filler Every Four CHs (refer to Figure 18): One dummy byte is inserted on the system side before 3 bytes of Frame N from the device are converted. This process repeats 8 times and the conversion of Frame N of 1.544 Mb/s data rate to 2.048 Mb/s data rate is completed. However, the F-bit of Frame N of the 1.544 Mb/s data rate is inserted as the 8th bit of Frame N of the 2.048 Mb/s data rate. The dummy bytes are filled with all '0's and they are meaningless.

3. T1/J1 Mode E1 Rate per Continuous CHs (refer to Figure 19): Channel 1 to Channel 24 of Frame N from the device are converted into TS1 to TS24 of Frame N on the system side. The F-bit of Frame N from the device is converted into the 8th bit of Frame N on the system side. The first 7 bits and TS25 to TS31 on the system side are all filled with '0's and they are meaningless.

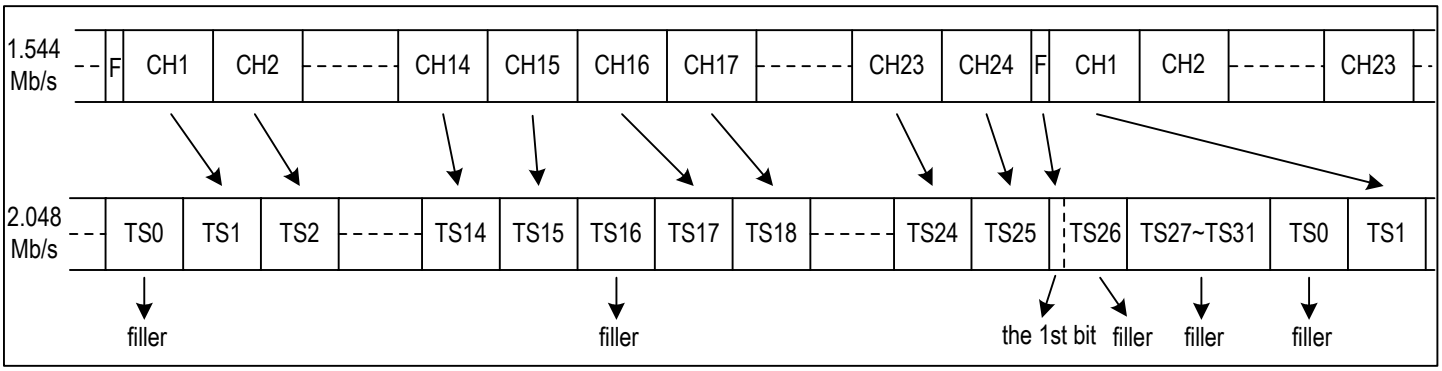

Figure 17. T1/J1 To E1 Format Mapping - G.802 Mode

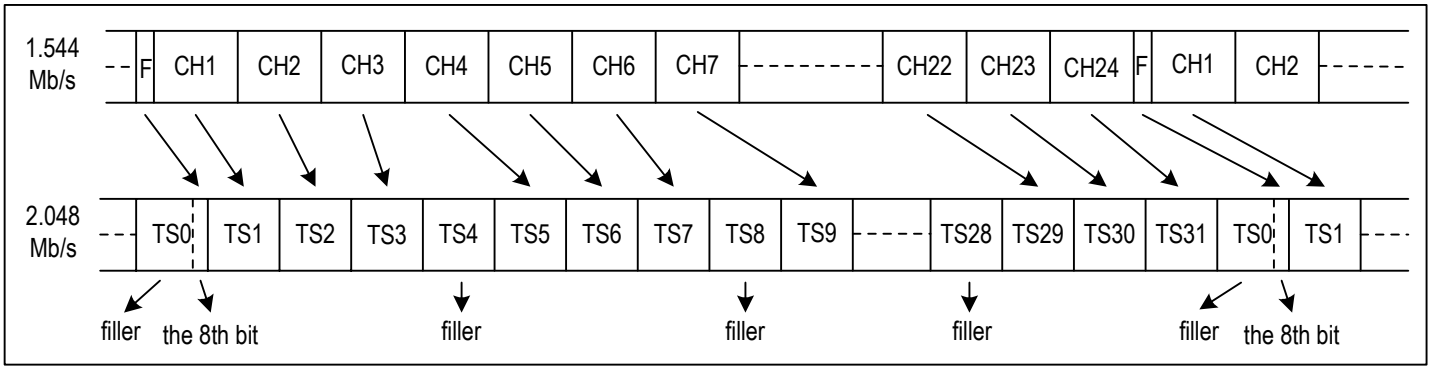

Figure 18. T1/J1 To E1 Format Mapping - One Filler Every Four Channels Mode

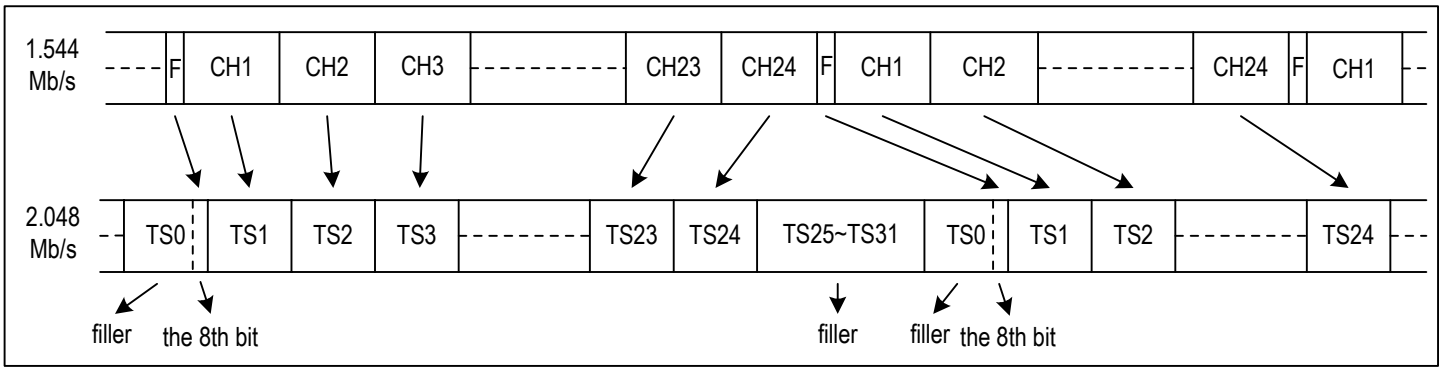

Figure 19. T1/J1 To E1 Format Mapping - Continuous Channels Mode

In the Receive Clock Slave mode, the timing signal on the RSCKn pin and the framing pulse on the RSFSn pin to output the data on the RSDn pin are provided by the system side. When the RSLVCK bit is set to '0', each link uses its own RSCKn and RSFSn; when the RSLVCK bit is set to '1' and all four links are in the Receive Clock Slave mode, the four links use the RSCK[1] and RSFS[1] to output the data. The signaling bits on the RSIGn pin are per-channel aligned with the data on the RSDn pin.

In the Receive Clock Slave mode, the data on the system interface is clocked by the RSCKn. The active edge of the RSCKn used to sample the pulse on the RSFSn is determined by the FE bit. The active edge of the RSCKn used to update the data on the RSDn and RSIGn is determined by the DE bit. If the FE bit and the DE bit are not equal, the pulse on the RSFSn is ahead. The data rate of the system side is 1.544 Mb/s or 2.048 Mb/s. When it is 2.048 Mb/s, the RSCKn can be selected by the CMS bit to be the same rate as the data rate on the system side (2.048 MHz) or double the data rate (4.096 MHz). If all four links use the RSCK[1] and RSFS[1] to output the data, the CMS bit of the four links should be set to the same value. If the speed of the RSCKn is double the data rate, there will be two active edges in one bit duration. In this case, the EDGE bit determines the active edge to update the data on the RSDn and RSIGn pins. The pulse on the RSFSn pin is always sampled on its first active edge.

In the Receive Clock Slave mode, the RSFSn asserts at a rate of integer multiple of 125 μs to indicate the start of a frame. The active polarity of the RSFSn is selected by the FSINV bit. If the pulse on the RSFSn pin is not an integer multiple of 125 μs, this detection will be indicated by the RCOFAI bit. If the RCOFAE bit is enabled, an interrupt will be reported by the $\overline{INT}$ pin when the RCOFAI bit is '1'.

3.17.1.3 Receive Multiplexed Mode

In the Receive Multiplexed mode, since the received data from the four links should be mapped to 2.048 Mb/s format first, the 3 kinds of schemes should be selected by the MAP[1:0] bits. The mapping per G.802, per One Filler Every Four CHs and per Continuous CHs are the same as the description in Chapter 3.17.1.2 Receive Clock Slave Mode.

In the Receive Multiplexed mode, a multiplexed bus is used to output the data from all four links. The data of Link 1 to Link 4 is byte-interleaved output on the multiplexed bus 1. When the data from the four links is output on one multiplexed bus, the sequence of the data is arranged by setting the channel offset. The data from different links on one multiplexed bus must be shifted at a different channel offset to avoid data mixing.

In the Receive Multiplexed mode, the timing signal on the MRSCK pin and the framing pulse on the MRSFS pin are provided by the system side and common to all four links. The signaling bits on the MRSIGA (MRSIGB) pin are per-channel aligned with the corresponding data on the MRSDA (MRSDB) pin.

In the Receive Multiplexed mode, the data on the system interface is clocked by the MRSCK. The active edge of the MRSCK used to sample the pulse on the MRSFS is determined by the FE bit. The active edge of the MRSCK used to update the data on the MRSDA (MRSDB) and MRSIGA (MRSIGB) is determined by the DE bit. The FE bit and the DE bit of the four links should be set to the same value respectively. If the FE bit and the DE bit are not equal, the pulse on the MRSFS is ahead. The MRSCK can be selected by the CMS bit to be the same rate as the data rate on the system side (8.192 MHz) or double the data rate (16.384 MHz). The CMS bit of the four links should be set to the same value. If the speed of the MRSCK is double the data rate, there will be two active edges in one bit duration. In this case, the EDGE bit determines the active edge to update the data on the MRSDA (MRSDB) and MRSIGA (MRSIGB) pins. The pulse on the MRSFS pin is always sampled on its first active edge.

In the Receive Multiplexed mode, the MRSFS asserts at a rate of integer multiple of 125 μs to indicate the start of a frame. The active polarity of the MRSFS is selected by the FSINV bit. The FSINV bit of the four links should be set to the same value. If the pulse on the MRSFS pin is not an integer multiple of 125 μs, this detection will be indicated by the RCOFAI bit. If the RCOFAE bit is enabled, an interrupt will be reported by the $\overline{INT}$ pin when the RCOFAI bit is '1'.

3.17.1.4 Offset

Bit offset and channel offset are both supported in all the operating modes. The offset is between the framing pulse on RSFSn/MRSFS pin and the start of the corresponding frame output on the RSDn/MRSDA(MRSDB) pin. The signaling bits on the RSIGn/

MRSIGA(MRSIGB) pin are always per-channel aligned with the data on the RSDn/MRSDA(MRSDB) pin.

Figure 20 to Figure 23 show the base line without offset.

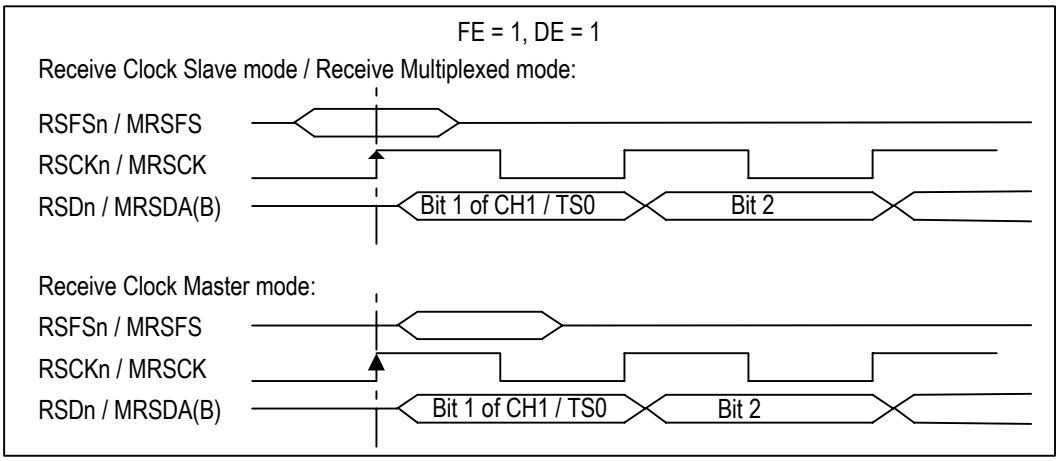

Figure 20. No Offset When FE = 1 & DE = 1 In Receive Path

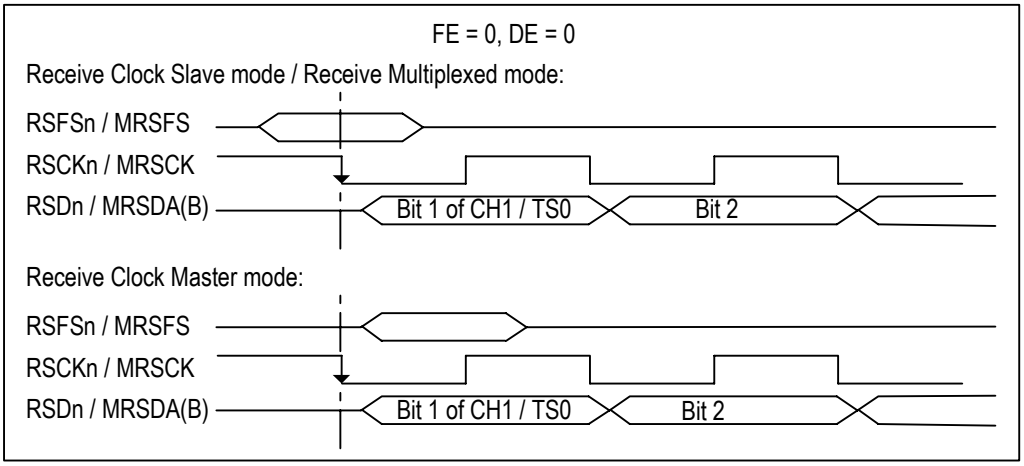

Figure 21. No Offset When FE = 0 & DE = 0 In Receive Path

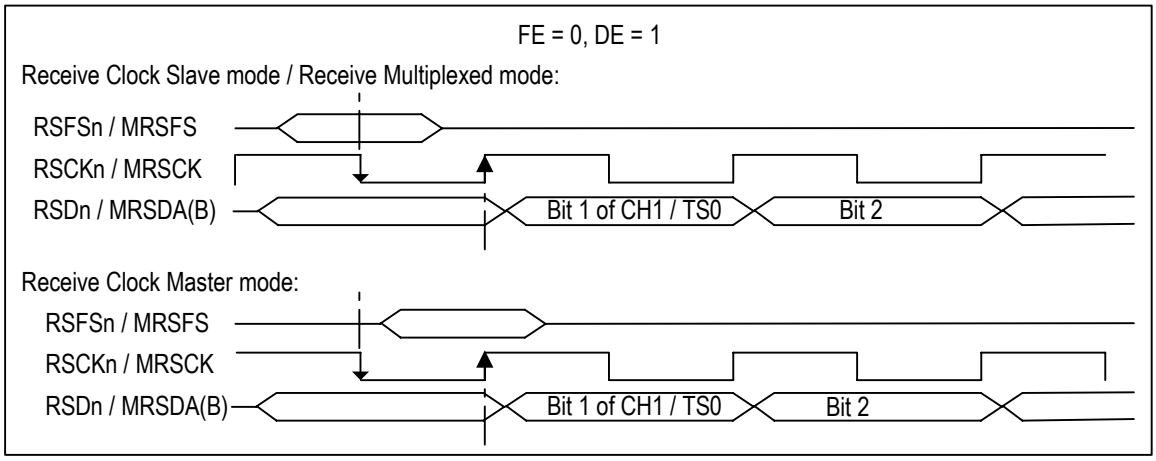

Figure 22. No Offset When FE = 0 & DE = 1 In Receive Path

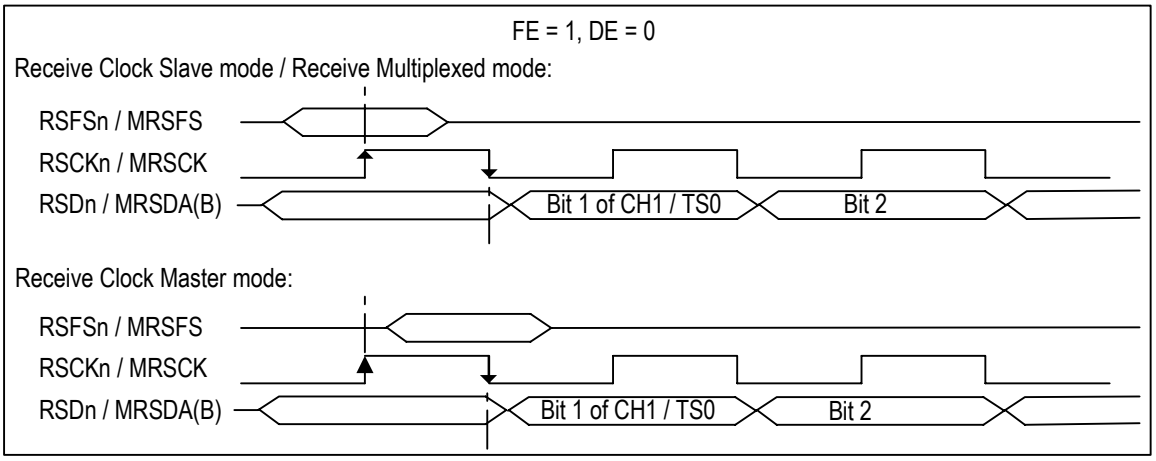

Figure 23. No Offset When FE = 1 & DE = 0 In Receive Path

The bit offset and channel offset are configured when the BOFF[2:0] bits and the TSOFF[6:0] bits are not '0' respectively.

When the CMS bit is '0' and the BOFF[2:0] bits are set, the start of the corresponding frame output on the RSDn/MRSDA(MRSDB) pin will delay 'N' clock cycles to the framing pulse on the RSFSn/MRSFS pin. (Here 'N' is defined by the BOFF[2:0] bits.) When the CMS bit is '0' and the TSOFF[6:0] bits are set, the start of the corresponding frame output on the RSDn/MRSDA(MRSDB) pin will delay '8 x M' clock cycles to the framing pulse on the RSFSn/MRSFS pin. (Here 'M' is defined by the TSOFF[6:0].)

When the CMS bit is '1' (i.e., in double clock mode) and the BOFF[2:0] bits are set, the start of the corresponding frame output on the RSDn/MRSDA(MRSDB) pin will delay '2 x N' clock cycles to the framing pulse on the RSFSn/MRSFS pin. (Here 'N' is defined by the BOFF[2:0] bits.) When the CMS bit is '1' (i.e., in double clock mode) and the TSOFF[6:0] bits are set, the start of the corresponding frame output on the RSDn/MRSDA(MRSDB) pin will delay '16 x M' clock cycles to the framing pulse on the RSFSn/MRSFS pin. (Here 'M' is defined by the TSOFF[6:0].)

In Non-multiplexed mode, the channel offset can be configured from 0 to 23 channels (0 & 23 are included). In Multiplexed mode, the channel offset can be configured from 0 to 127 channels (0 & 127 are included).

3.17.1.5 Output On RSDn/MRSDA(MRSDB) & RSIGn/MRSIGA(MRSIGB)

The output on the RSDn/MRSDA(MRSDB) and the RSIGn/MRSIGA(MRSIGB) pins can be configured by the TRI bit of the corresponding link to be in high impedance state or to output the processed data stream.

3.17.2 E1 MODE

In E1 mode, the Receive System Interface can be set in Non-multiplexed Mode or Multiplexed Mode. In the Non-multiplexed Mode, the RSDn pin is used to output the received data from each link at the bit rate of 2.048 Mb/s. While in the Multiplexed Mode, the received data from the four links is byte interleaved to form one high speed data stream and output on the MRSDA1 (MRSDB1) pins at the bit rate of 8.192 Mb/s.

In the Non-multiplexed Mode, if the receive system interface and the receive line side are timed to a same clock source, the Receive System Interface is in Receive Clock Master mode. If the receive system interface and the receive line side are timed to different clock sources, the Receive System Interface is in Receive Clock Slave mode.

In the Receive Clock Master mode, if RSCKn outputs pulses during the entire E1 frame, the Receive System Interface is in Receive Clock Master Full E1 mode. If only the clocks aligned to the selected timeslots are output on RSCKn, the Receive System Interface is in Receive Clock Master Fractional E1 mode.

Table 40 summarizes how to set the receive system interface of each link into various operating modes and the pins' direction of the receive system interface in different operating modes.

Table 40: Operating Modes Selection In E1 Receive Path

RMUX	RMODE	G56K, GAP	Operating Mode	Receive System Interface Pin	
				Input	Output
0	0	00	Receive Clock Master Full E1	X	RSCKn, RSFSn, RSDn, RSIGn
		not both 0s [1]	Receive Clock Master Fractional E1		
	1	X	Receive Clock Slave	RSCKn, RSFSn	RSDn, RSIGn
1	X	X	Receive Multiplexed	MRSCK, MRSFS	MRSDA[1], MRSIGA[1] (MRSDB[1], MRSIGB[1]) [2]

NOTE:
1. When the G56K, GAP bits in RPLC indirect registers are set, the PCCE bit must be set to '1'.
2. In Receive Multiplexed mode, two sets of multiplexed data and signaling pins (A and B) are provided. Their functions are the same. One is the backup for the other.

3.17.2.1 Receive Clock Master Mode

In the Receive Clock Master mode, each link uses its own timing signal on the RSCKn pin and framing pulse on the RSFSn pin to output the data on each RSDn pin. The signaling bits on the RSIGn pin are per-timeslot aligned with the data on the RSDn pin.

In the Receive Clock Master mode, the data on the system interface is clocked by the RSCKn. The active edge of the RSCKn used to update the pulse on the RSFSn is determined by the FE bit. The active edge of the RSCKn used to update the data on the RSDn and RSIGn is determined by the DE bit. If the FE bit and the DE bit are not equal, the pulse on the RSFSn is ahead.

In the Receive Clock Master mode, the RSFSn can indicate the Basic frame, CRC Multi-frame, Signaling Multi-frame, or both the CRC Multi-frame and Signaling Multi-frame, or the TS1 and TS 16 overhead. All the indications are selected by the OHD bit, the SMFS bit and the CMFS bit. The active polarity of the RSFSn is selected by the FSINV bit.

The Receive Clock Master mode includes two sub-modes: Receive Clock Master Full E1 mode and Receive Clock Master Fractional E1 mode.

3.17.2.1.1 Receive Clock Master Full E1 Mode

Besides all the common functions described in the Receive Clock Master mode, the special feature in this mode is that the RSCKn is a standard 2.048 MHz clock, and the data in all 32 timeslots in a standard E1 frame is clocked out by the RSCKn.

3.17.2.1.2 Receive Clock Master Fractional E1 Mode

Besides all the common functions described in the Receive Clock Master mode, the special feature in this mode is that the RSCKn is a gapped 2.048 MHz clock (no clock signal during the selected timeslot).

The RSCKn is gapped during the timeslots or the Bit 8 duration by selecting the G56K & GAP bits in the Receive Payload Control. The data in the corresponding gapped duration is a don't care condition.

3.17.2.2 Receive Clock Slave Mode

In the Receive Clock Slave mode, the timing signal on the RSCKn pin and framing pulse on the RSFSn pin to output the data on the RSDn pin are provided by the system side. When the RSLVCK bit is set to '0', each link uses its own RSCKn and RSFSn; when the RSLVCK bit is set to '1' and all four links are in the Receive Clock Slave mode, the four links use the RSCK[1] and RSFS[1] to output the data. The signaling bits on the RSIGn pin are per-timeslot aligned with the data on the RSDn pin.

In the Receive Clock Slave mode, the data on the system interface is clocked by the RSCKn. The active edge of the RSCKn used to sample the pulse on the RSFSn is determined by the FE bit. The active edge of the RSCKn used to update the data on the RSDn and RSIGn is determined by the DE bit. If the FE bit and the DE bit are not equal, the pulse on the RSFSn is ahead. The speed of the RSCKn can be selected by the CMS bit to be the same rate as the data rate on the system side (2.048 MHz) or double the data rate (4.096 MHz). If all four links use the RSCK[1] and RSFS[1] to output the data, the CMS bit of the four links should be set to the same value. If the speed of the RSCKn is double the data rate, there will be two active edges in one bit duration. In this case, the EDGE bit determines the active edge to update the data on the

RSDn and RSIGn pins. The pulse on the RSFSn pin is always sampled on its first active edge.

In the Receive Clock Slave mode, the RSFSn asserts at a rate of integer multiple of 125 μs to indicate the start of a frame. The active polarity of the RSFSn is selected by the FSINV bit. If the pulse on the RSFSn pin is not an integer multiple of 125 μs, this detection will be indicated by the RCOFAI bit. If the RCOFAE bit is enabled, an interrupt will be reported by the $\overline{INT}$ pin when the RCOFAI bit is '1'.

3.17.2.3 Receive Multiplexed Mode

In the Receive Multiplexed mode, one multiplexed bus is used to output the data from all four links. The data of Link 1 to Link 4 is byte-interleaved output on the multiplexed bus 1. When the data from the four links is output on one multiplexed bus, the sequence of the data is arranged by setting the timeslot offset. The data from different links on one multiplexed bus must be shifted at a different timeslot offset to avoid data mixing.

In the Receive Multiplexed mode, the timing signal on the MRSCK pin and the framing pulse on the MRSFS pin are provided by the system side and common to all four links. The signaling bits on the MRSIGA (MRSIGB) pin are per-timeslot aligned with the corresponding data on the MRSDA (MRSDB) pin.

In the Receive Multiplexed mode, the data on the system interface is clocked by the MRSCK. The active edge of the MRSCK used to sample the pulse on the MRSFS is determined by the FE bit. The active edge of the MRSCK used to update the data on the MRSDA (MRSDB) and MRSIGA (MRSIGB) is determined by the DE bit. The FE bit and the DE bit of the four links should be set to the same value respectively. If the FE bit and the DE bit are not equal, the pulse on the MRSFS is ahead. The MRSCK can be selected by the CMS bit to be the same rate as the data rate on the system side (8.192 MHz) or double the data rate (16.384 MHz). The CMS bit of the four links should be set to the same value. If the speed of the MRSCK is double the data rate, there will be two active edges in one bit duration. In this case, the EDGE bit determines the active edge to update the data on the MRSDA (MRSDB) and MRSIGA (MRSIGB) pins. The pulse on the MRSFS pin is always sampled on its first active edge.

In the Receive Multiplexed mode, the MRSFS asserts at a rate of integer multiple of 125 μs to indicate the start of a frame. The active polarity of the MRSFS is selected by the FSINV bit. The FSINV bit of the four links should be set to the same value. If the pulse on the MRSFS pin is not an integer multiple of 125 μs, this detection will be indicated by the RCOFAI bit. If the RCOFAE bit is enabled, an interrupt will be reported by the $\overline{INT}$ pin when the RCOFAI bit is '1'.

3.17.2.4 Offset

Except that in the Receive Master mode, when the OHD bit, the SMFS bit and the CMFS bit are set to TS1 and TS16 overhead indication, the bit offset and timeslot offset are both supported in all the other conditions. The offset is between the framing pulse on RSFSn/MRSFS pin and the start of the corresponding frame output on the RSDn/MRSDA(MRSDB) pin. The signaling bits on the RSIGn/MRSIGA(MRSIGB) pin are always per-timeslot aligned with the data on the RSDn/MRSDA(MRSDB) pin.

Refer to Chapter 3.17.1.4 Offset for the base line without offset in different operating modes and the configuration of the offset.

In Non-multiplexed mode, the timeslot offset can be configured from 0 to 31 timeslots (0 & 31 are included). In Multiplexed mode, the timeslot offset can be configured from 0 to 127 timeslots (0 & 127 are included).

3.17.2.5 Output On RSDn/MRSDA(MRSDB) & RSIGn/MRSIGA(MRSIGB)

The output on the RSDn/MRSDA(MRSDB) and the RSIGn/MRSIGA(MRSIGB) pins can be configured by the TRI bit of the corresponding link to be in high impedance state or to output the processed data stream.

Table 41: Related Bit / Register In Chapter 3.17

Bit	Register	Address (Hex)
RMUX	Backplane Global Configuration	010
RSLVCK		
RMODE	RBIF Mode	047, 147, 247, 347
MAP[1:0] (T1/J1 only)		
G56K	ID * - Channel Control (for T1/J1) / Timeslot Control (for E1)	RPLC ID - 01~18 (for T1/J1) / 00~1F (for E1)
GAP		
FBITGAP (T1/J1 only)	RBIF Operation	046, 146, 246, 346
FE		
DE		
CMS		
TRI		
PCCE	RPLC Control Enable	0D1, 1D1, 2D1, 3D1
CMFS	RBIF Frame Pulse	048, 148, 248, 348
ALTIFS (T1/J1 only)		
FSINV		
OHD (E1 only)		
SMFS (E1 only)		
EDGE	RBIF Bit Offset	04A, 14A, 24A, 34A
BOFF[2:0]		
RCOFAI	RTSFS Change Indication	04BH, 14B, 24B, 34B
RCOFAE	RTSFS Interrupt Control	04C, 14C, 24C, 34C
TSOFF[6:0]	RBIT TS Offset	049, 149, 249, 349

Note:
* ID means Indirect Register in the Receive Payload Control function block.

3.18 TRANSMIT SYSTEM INTERFACE

The Transmit System Interface determines how to input the data to the device. The data input to the four links can be aligned with each other or input independently. The timing clocks and framing pulses can be provided by the system backplane or obtained from the processed data of each link. The Transmit System Interface supports various configurations to meet various requirements in different applications.

3.18.1 T1/J1 MODE

In T1/J1 mode, the Transmit System Interface can be set in Non-multiplexed Mode or Multiplexed Mode. In the Non-multiplexed Mode, the TSDn pin is used to input the data to each link at the bit rate of 1.544 Mb/s or 2.048 Mb/s (T1/J1 mode E1 rate). While in the Multiplexed Mode, the data is byte-interleaved from one high speed data stream and inputs on the MTSDA1 (MTSDB1) pins at the bit rate of 8.192 Mb/s. The demultiplexed data input to the four links is 2.048 Mb/s on the system side and converted into 1.544 Mb/s format to the device.

In the Non-multiplexed mode, if the transmit system interface and the transmit line side are timed to a same clock source, the Transmit System Interface is in Transmit Clock Master mode. If the transmit system interface and the transmit line side are timed to different clock sources, the Transmit System Interface is in Transmit Clock Slave mode.

In the Transmit Clock Master mode, if TSCKn outputs pulses during the entire T1/J1 frame, the Transmit System Interface is in Transmit Clock Master Full T1/J1 mode. If only the clocks aligned to the selected channels are output on TSCKn, the Transmit System Interface is in Transmit Clock Master Fractional T1/J1 mode.

In the Transmit Clock Slave mode, the backplane data rate may be equal to 1.544 Mb/s (i.e., the line data rate) or 2.048 Mb/s. If the backplane data rate is 2.048 Mb/s, the Transmit System Interface is in T1/J1 mode E1 rate and the data to be transmitted should be mapped to 1.544 Mb/s per 3 kinds of schemes.

In the Transmit Multiplexed mode, since the demultiplexed data rate on the system side (2.048 Mb/s) should be mapped to the data rate in the line side (1.544 Mb/s), there are still 3 kinds of schemes to be selected.

Table 42 summarizes how to set the transmit system interface of each link into various operating modes and the pins' direction of the transmit system interface in different operating modes.

Table 42: Operating Modes Selection In T1/J1 Transmit Path

TMUX	TMODE	G56K, GAP / FBITGAP	MAP[1:0] [2]	Operating Mode	Transmit System Interface Pin	
					Input	Output
0	0	00 / 0	X	Transmit Clock Master Full T1/J1	TSDn, TSIGn	TSCKn, TSFSn
		not all 0s [1]		Transmit Clock Master Fractional T1/J1		
	1	X	00	Transmit Clock Slave - T1/J1 Rate	TSDn, TSIGn, TSCKn, TSFSn	X
			01	Transmit Clock Slave - T1/J1 Mode E1 Rate per G.802		
			10	Transmit Clock Slave - T1/J1 Mode E1 Rate per One Filler Every Four CHs		
			11	Transmit Clock Slave - T1/J1 Mode E1 Rate per Continuous CHs		
1	X	X	01	Transmit Multiplexed - T1/J1 Mode E1 Rate per G.802	MTSCK, MTSFS, MTSDA[1], MTSIGA[1] (MTSDB[1], MTSIGB[1]) [3]	X
			10	Transmit Multiplexed - T1/J1 Mode E1 Rate per One Filler Every Four CHs		
			11	Transmit Multiplexed - T1/J1 Mode E1 Rate per Continuous CHs		

NOTE:
1. When the G56K, GAP bits in TPLC indirect registers are set, the PCCE bit must be set to '1'.
2. The MAP[1:0] bits can not be set to '00' in the Transmit Multiplexed mode.
3. In Transmit Multiplexed mode, two sets of multiplexed data and signaling pins (A and B) are provided for one multiplexed bus. Their functions are the same. One is the backup for the other. One set is selected by the MTSDA bit when used.

3.18.1.1 Transmit Clock Master Mode

In the Transmit Clock Master mode, each link uses its own timing signal on the TSCKn pin and framing pulse on the TSFSn pin to input the data on each TSDn pin. The signaling bits on the TSIGn pin are per-channel aligned with the data on the TSDn pin.

In the Transmit Clock Master mode, the data on the system interface is clocked by the TSCKn. The active edge of the TSCKn used to update the pulse on the TSFSn is determined by the FE bit. The active edge of the TSCKn used to sample the data on the TSDn and TSIGn is determined by the DE bit. If the FE bit and the DE bit are not equal, the pulse on the TSFSn is ahead.

In the Transmit Clock Master mode, the TSFSn can indicate each F-bit or the first F-bit of every SF/ESF/T1 DM/SLC-96 multi-frame. The indications are selected by the FSTYP bit. The active polarity of the TSFSn is selected by the FSINV bit.

The Transmit Clock Master mode includes two sub-modes: Transmit Clock Master Full T1/J1 mode and Transmit Clock Master Fractional T1/J1 mode.

3.18.1.1.1 Transmit Clock Master Full T1/J1 Mode

Besides all the common functions described in the Transmit Clock Master mode, the special feature in this mode is that the TSCKn is a standard 1.544 MHz clock, and the data in the F-bit and all 24 channels in a standard T1/J1 frame are clocked in by the TSCKn.

3.18.1.1.2 Transmit Clock Master Fractional T1/J1 Mode

Besides all the common functions described in the Transmit Clock Master mode, the special feature in this mode is that the TSCKn is a gapped 1.544 MHz clock (no clock signal during the selected channel).

The TSCKn is gapped during the F-bit if the FBITGAP bit is set to '1'. The TSCKn is also gapped during the channels or the Bit 8 duration by selecting the G56K & GAP bits in the Transmit Payload Control. The data in the corresponding gapped duration is a Don't Care condition.

3.18.1.2 Transmit Clock Slave Mode

In the Transmit Clock Slave mode, the system data rate can be 1.544 Mb/s or 2.048 Mb/s. If the system data rate is 1.544 Mb/s, it works in T1/J1 mode. If the system data rate is 2.048 Mb/s, the data stream to be transmitted should be mapped to 1.544 Mb/s, that is, to work in T1/J1 mode E1 rate. Three kinds of schemes are provided by selecting the MAP[1:0] bits:

1. T1/J1 Mode E1 Rate per G.802 (refer to Figure 24): TS1 to TS15 of Frame N on the system side are converted into Channel 1 to Channel 15 of Frame N to the device; TS17 to TS25 of Frame N on the system side are converted into Channel 16 to Channel 24 of Frame N to the device. The first bit of TS26 of Frame (N-1) on the system side is converted into the F-bit of Frame N to the device. TS0, TS16, TS27~TS31 and the other 7 bits in TS26 on the system side are all discarded.

2. T1/J1 Mode E1 Rate per One Filler Every Four CHs (refer to Figure 25): The 8th bit of Frame N on the system side is converted to the F-bit of the Frame N to the device. Then one byte of the system side is discarded after the previous three bytes are converted into the device. This process repeats 8 times and the conversion of one frame is completed. Then the process goes on.

3. T1/J1 Mode E1 Rate per Continuous CHs (refer to Figure 26): TS1 to TS24 of Frame N on the system side are converted into Channel 1 to Channel 24 of Frame N to the device. The 8th bit of Frame N on the system side is converted into the F-bit of Frame N to the device. The first 7 bits and TS25 to TS31 on the system side are all discarded.

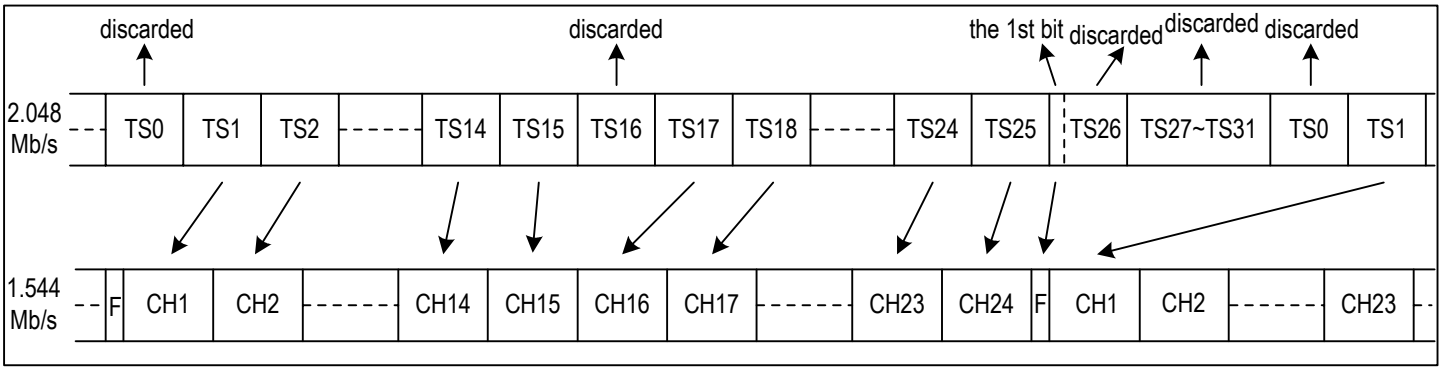

Figure 24. E1 To T1/J1 Format Mapping - G.802 Mode

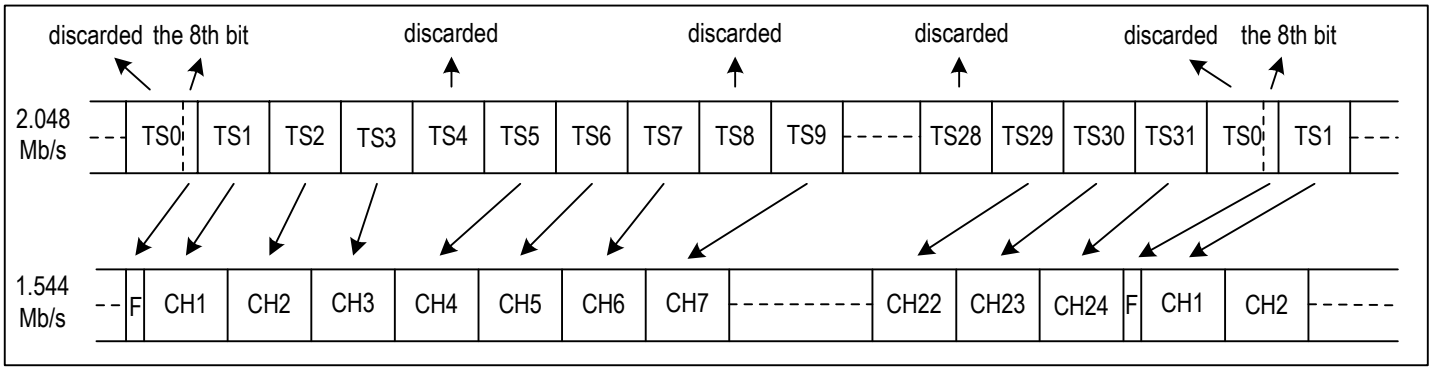

Figure 25. E1 To T1/J1 Format Mapping - One Filler Every Four Channels Mode

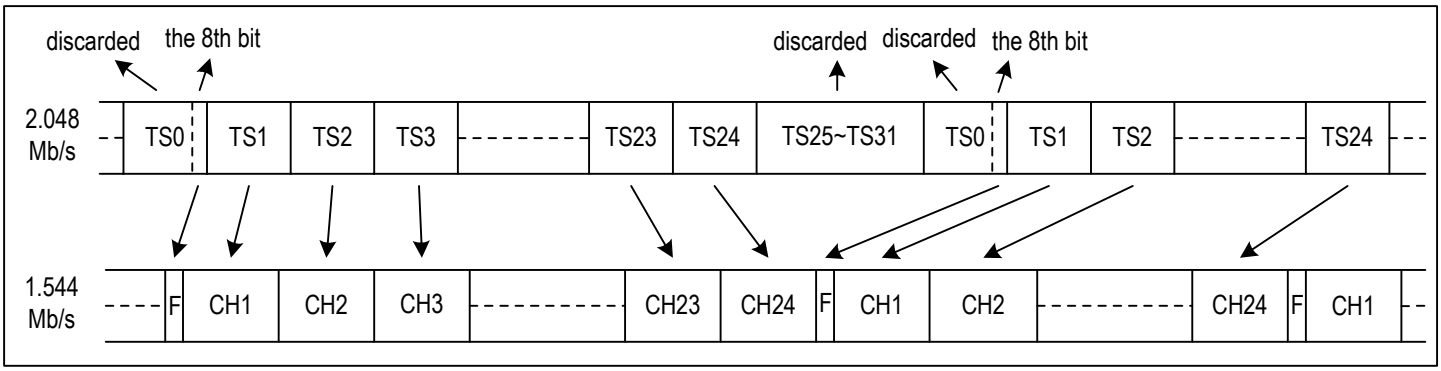

Figure 26. E1 To T1/J1 Format Mapping - Continuous Channels Mode

In the Transmit Clock Slave mode, the timing signal on the TSCKn pin and the framing pulse on the TSFSn pin to input the data on the TSDn pin are provided by the system side. When the TSLVCK bit is set to '0', each link uses its own TSCKn and TSFSn; when the TSLVCK bit is set to '1' and all four links are in the Transmit Clock Slave mode, the four links use the TSCK[1] and TSFS[1] to input the data. The signaling bits on the TSIGn pin are per-channel aligned with the data on the TSDn pin.

In the Transmit Clock Slave mode, the data on the system interface is clocked by the TSCKn. The active edge of the TSCKn used to sample the pulse on the TSFSn is determined by the FE bit. The active edge of the TSCKn used to sample the data on the TSDn and TSIGn is determined by the DE bit. If the FE bit and the DE bit are not equal, the pulse on the TSFSn is ahead. The data rate of the system side is 1.544 Mb/s or 2.048 Mb/s. When it is 2.048 Mb/s, the TSCKn can be selected by the CMS bit to be the same rate as the data rate on the system side (2.048 MHz) or double the data rate (4.096 MHz). If all four links use the TSCK[1] and TSFS[1] to input the data, the CMS bit of the four links should be set to the same value. If the speed of the TSCKn is double the data rate, there will be two active edges in one bit duration. In this case, the EDGE bit determines the active edge to sample the data on the TSDn and TSIGn pins. The pulse on the TSFSn pin is always sampled on its first active edge.

In the Transmit Clock Slave mode, the TSFSn can indicate each F-bit or the first F-bit of every SF/ESF/T1 DM/SLC-96 multi-frame. The indications are selected by the FSTYP bit. The active polarity of the TSFSn is selected by the FSINV bit. If the pulse on the TSFSn pin is not an integer multiple of 125 μs, this detection will be indicated by the TCOFAI bit. If the TCOFAE bit is enabled, an interrupt will be reported by the $\overline{\text{INT}}$ pin when the TCOFAI bit is '1'.

3.18.1.3 Transmit Multiplexed Mode

In the Transmit Multiplexed mode, since the demultiplexed data rate on the system side (2.048 Mb/s) should be mapped to the data rate in the line side (1.544 Mb/s), 3 kinds of schemes should be selected by the MAP[1:0] bits. The schemes per G.802, per One Filler Every Four CHs and per Continuous CHs are the same as the description in Chapter 3.18.1.2 Transmit Clock Slave Mode.

In the Transmit Multiplexed mode, one multiplexed bus is used to transmit the data to all four links. The data of Link 1 to Link 4 is byte-interleaved input from the multiplexed bus 1. When the data on the multiplexed bus is input to four links, the sequence of the data is arranged by setting the channel offset. The data to different links from one multiplexed bus must be shifted at a different channel offset to avoid data mixing.

In the Transmit Multiplexed mode, the timing signal on the MTSCK pin and the framing pulse on the MTSFS pin are provided by the system side and common to all four links. The signaling bits on the MTSIGA (MTSIGB) pin are per-channel aligned with the corresponding data on the MTSDA (MTSDB) pin.

In the Transmit Multiplexed mode, the data on the system interface is clocked by the MTSCK. The active edge of the MTSCK used to sample the pulse on the MTSFS is determined by the FE bit. The active edge of the MTSCK used to sample the data on the MTSDA (MTSDB) and MTSIGA (MTSIGB) is determined by the DE bit. The FE bit and the DE bit of the four links should be set to the same value respectively. If the FE bit and the DE bit are not equal, the pulse on the MTSFS is ahead. The MTSCK can be selected by the CMS bit to be the same rate as the data rate on the system side (8.192 MHz) or double the data rate (16.384 MHz). The CMS bit of the four links should be set to the same value. If the speed of the MTSCK is double the data rate, there will be two active edges in one bit duration. In this case, the EDGE bit determines the active edge to sample the data on the MTSDA (MTSDB) and MTSIGA (MTSIGB) pins. The pulse on the MTSFS pin is always sampled on its first active edge.

In the Transmit Multiplexed mode, the MTSFS can indicate each F-bit of the first link or the first F-bit of every SF/ESF/T1 DM/SLC-96 multi-frame of the first link. The indications are selected by the FSTYP bit. The active polarity of the MTSFS is selected by the FSINV bit. The FSTYP bit and the FSINV bit of the four links should be set to the same value. If the pulse on the MTSFS pin is not an integer multiple of 125 μs, this detection will be indicated by the TCOFAI bit. If the TCOFAE bit is enabled, an interrupt will be reported by the $\overline{\text{INT}}$ pin when the TCOFAI bit is '1'.

3.18.1.4 Offset

Bit offset and channel offset are both supported in all the operating modes. The offset is between the framing pulse on the TSFSn/MTSFS pin and the start of the corresponding frame input on the TSDn/MTSDA(MTSDB) pin. The signaling bits on the TSIGn/MTSIGA(MTSIGB) pin are always per-channel aligned with the data on the TSDn/MTSDA(MTSDB) pin.

Figure 27 to Figure 30 show the base line without offset.

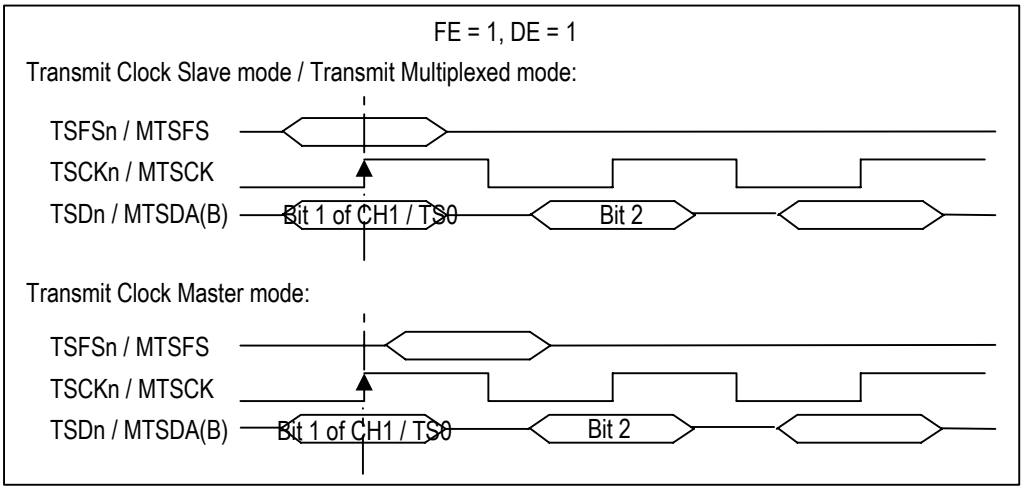

Figure 27. No Offset When FE = 1 & DE = 1 In Transmit Path

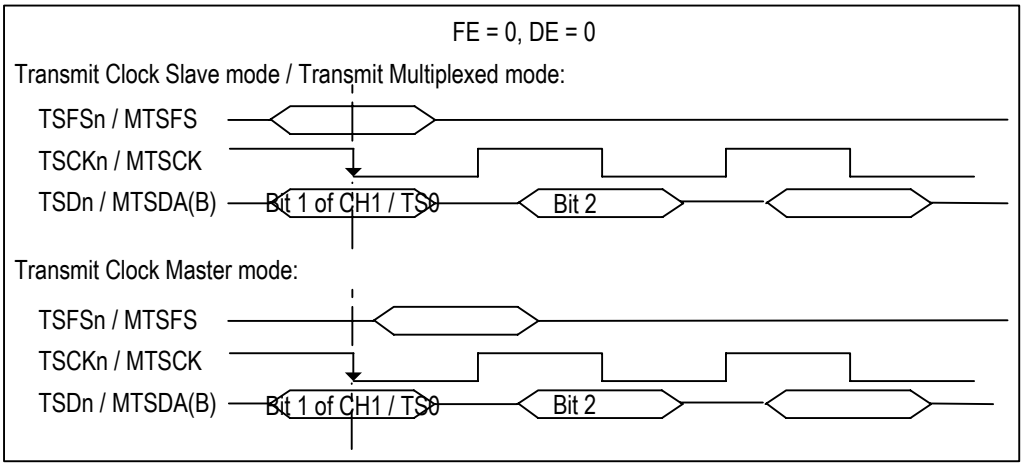

Figure 28. No Offset When FE = 0 & DE = 0 In Transmit Path

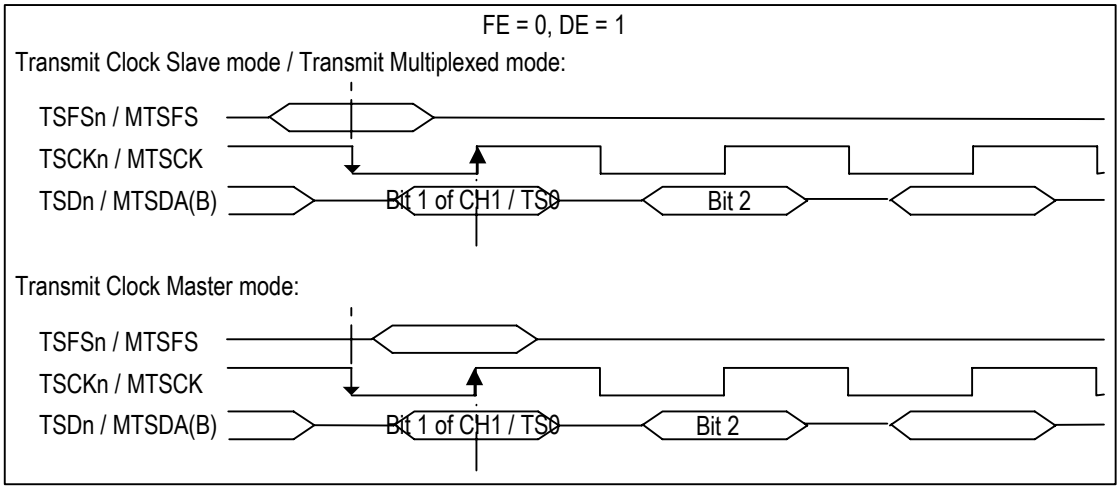

Figure 29. No Offset When FE = 0 & DE = 1 In Transmit Path

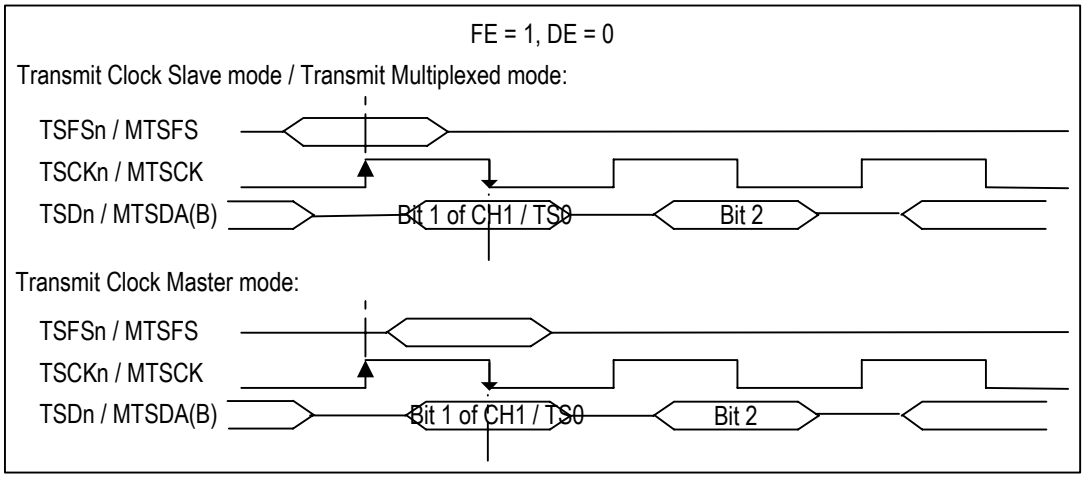

Figure 30. No Offset When FE = 1 & DE = 0 In Transmit Path

The bit offset and channel offset are configured when the BOFF[2:0] bits and the TSOFF[6:0] bits are not '0' respectively.

When the CMS bit is '0' and the BOFF[2:0] bits are set, the start of the corresponding frame input on the TSDn/MTSDA(MTSDB) pin will delay 'N' clock cycles to the framing pulse on the TSFSn/MTSFS pin. (Here 'N' is defined by the BOFF[2:0] bits.) When the CMS bit is '0' and the TSOFF[6:0] bits are set, the start of the corresponding frame input on the TSDn/MTSDA(MTSDB) pin will delay '8 x M' clock cycles to the framing pulse on the TSFSn/MTSFS pin. (Here 'M' is defined by the TSOFF[6:0].)

When the CMS bit is '1' (i.e., in double clock mode) and the BOFF[2:0] bits are set, the start of the corresponding frame input on the TSDn/MTSDA(MTSDB) pin will delay '2 x N' clock cycles to the framing pulse on the TSFSn/MTSFS pin. (Here 'N' is defined by the BOFF[2:0] bits.) When the CMS bit is '1' (i.e., in double clock mode) and the TSOFF[6:0] bits are set, the start of the corresponding frame input on the TSDn/MTSDA(MTSDB) pin will delay '16 x M' clock cycles to the framing pulse on the TSFSn/MTSFS pin. (Here 'M' is defined by the TSOFF[6:0].)

In Non-multiplexed mode, the channel offset can be configured from 0 to 23 channels (0 & 23 are included). In Multiplexed mode, the channel offset can be configured from 0 to 127 channels (0 & 127 are included).

3.18.2 E1 MODE

In E1 mode, the Transmit System Interface can be set in Non-multiplexed Mode or Multiplexed Mode. In the Non-multiplexed Mode, the TSDn pin is used to input the data to each link at the bit rate of 2.048 Mb/s. While in the Multiplexed Mode, the data is byte interleaved from one high speed data stream and inputs on the MTSDA1 (MTSDB1) pins at the bit rate of 8.192 Mb/s.

In the Non-multiplexed mode, if the transmit system interface and the transmit line side are timed to a same clock source, the Transmit System Interface is in Transmit Clock Master mode. If the transmit system interface and the transmit line side are timed to different clock sources, the Transmit System Interface is in Transmit Clock Slave mode.

In the Transmit Clock Master mode, if TSCKn outputs pulses during the entire E1 frame, the Transmit System Interface is in Transmit Clock Master Full E1 mode. If only the clocks aligned to the selected timeslots are output on TSCKn, the Transmit System Interface is in Transmit Clock Master Fractional E1 mode.

Table 43 summarizes how to set the transmit system interface of each link into various operating modes and the pins' direction of the transmit system interface in different operating modes.

Table 43: Operating Modes Selection In E1 Transmit Path

TMUX	TMODE	G56K, GAP	Operating Mode	Transmit System Interface Pin	
				Input	Output
0	0	00	Transmit Clock Master Full E1	TSDn, TSIGn	TSCKn, TSFSn
		not both 0s [1]	Transmit Clock Master Fractional E1		
	1	X	Transmit Clock Slave	TSCKn, TSFSn, TSDn, TSIGn	X
1	X	X	Transmit Multiplexed	MTSCK, MTSFS, MTSDA[1], MTSIGA[1] (MTSDB[1], MTSIGB[1]) [2]	X

NOTE:
1. When the G56K, GAP bits in TPLC indirect registers are set, the PCCE bit must be set to '1'.
2. In Transmit Multiplexed mode, two sets of multiplexed data and signaling pins (A and B) are provided for one multiplexed bus. Their functions are the same. One is the backup for the other. One set is selected by the MTSDA bit when used.

3.18.2.1 Transmit Clock Master Mode

In the Transmit Clock Master mode, each link uses its own timing signal on the TSCKn pin and framing pulse on the TSFSn pin to input the data on each TSDn pin. The signaling bits on the TSIGn pin are per-timeslot aligned with the data on the TSDn pin.

In the Transmit Clock Master mode, the data on the system interface is clocked by the TSCKn. The active edge of the TSCKn used to update the pulse on the TSFSn is determined by the FE bit. The active edge of the TSCKn used to sample the data on the TSDn and TSIGn is determined by the DE bit. If the FE bit and the DE bit are not equal, the pulse on the TSFSn is ahead.

In the Transmit Clock Master mode, the TSFSn can indicate the Basic frame, CRC Multi-frame and/or Signaling Multi-frame. The indications are selected by the FSTYP bit. The active polarity of the TSFSn is selected by the FSINV bit.

The Transmit Clock Master mode includes two sub-modes: Transmit Clock Master Full E1 mode and Transmit Clock Master Fractional E1 mode.

3.18.2.1.1 Transmit Clock Master Full E1 Mode

Besides all the common functions described in the Transmit Clock Master mode, the special feature in this mode is that the TSCKn is a standard 2.048 MHz clock, and the data in all 32 timeslots in a standard E1 frame are clocked in by the TSCKn.

3.18.2.1.2 Transmit Clock Master Fractional E1 Mode

Besides all the common functions described in the Transmit Clock Master mode, the special feature in this mode is that the TSCKn is a gapped 2.048 MHz clock (no clock signal during the selected timeslot).

The TSCKn is gapped during the timeslots or the Bit 8 duration by selecting the G56K & GAP bits in the Transmit Payload Control. The data in the corresponding gapped duration is a don't care condition.

3.18.2.2 Transmit Clock Slave Mode

In the Transmit Clock Slave mode, the timing signal on the TSCKn pin and the framing pulse on the TSFSn pin to input the data on the TSDn pin are provided by the system side. When the TSLVCK bit is set to '0', each link uses its own TSCKn and TSFSn; when the TSLVCK bit is set to '1' and all four links are in the Transmit Clock Slave mode, the four links use the TSCK[1] and TSFS[1] to input the data. The signaling bits on the TSIGn pin are per-timeslot aligned with the data on the TSDn pin.

In the Transmit Clock Slave mode, the data on the system interface is clocked by the TSCKn. The active edge of the TSCKn used to sample the pulse on the TSFSn is determined by the FE bit. The active edge of the TSCKn used to sample the data on the TSDn and TSIGn is determined by the DE bit. If the FE bit and the DE bit are not equal, the pulse on the TSFSn is ahead. The speed of the TSCKn can be selected by the CMS bit to be the same rate as the data rate on the system side (2.048 Mb/s) or double the data rate (4.096 Mb/s). If all four links use the TSCK[1] and TSFS[1] to input the data, the CMS bit of the four links should be set to the same value. If the speed of the TSCKn is double the data rate, there will be two active edges in one bit duration. In this case,

the EDGE bit determines the active edge to sample the data on the TSDn and TSIGn pins. The pulse on the TSFSn pin is always sampled on its first active edge.

In the Transmit Clock Slave mode, the TSFSn can indicate the Basic frame, CRC Multi-frame and/or Signaling Multi-frame. The indications are selected by the FSTYP bit. The active polarity of the TSFSn is selected by the FSINV bit. If the pulse on the TSFSn pin is not an integer multiple of 125 μs, this detection will be indicated by the TCOFAI bit. If the TCOFAE bit is enabled, an interrupt will be reported by the $\overline{INT}$ pin when the TCOFAI bit is '1'.

3.18.2.3 Transmit Multiplexed Mode

In the Transmit Multiplexed mode, one multiplexed bus is used to transmit the data to all four links. The data of Link 1 to Link 4 is byte-interleaved input from the multiplexed bus 1. When the data on the multiplexed bus is input to four links, the sequence of the data is arranged by setting the timeslot offset. The data to different links from one multiplexed bus must be shifted at a different timeslot offset to avoid data mixing.

In the Transmit Multiplexed mode, the timing signal on the MTSCK pin and the framing pulse on the MTSFS pin are provided by the system side and common to all four links. The signaling bits on the MTSIGA (MTSIGB) pin are per-timeslot aligned with the corresponding data on the MTSDA (MTSDB) pin.

In the Transmit Multiplexed mode, the data on the system interface is clocked by the MTSCK. The active edge of the MTSCK used to sample the pulse on the MTSFS is determined by the FE bit. The active edge of the MTSCK used to sample the data on the MTSDA (MTSDB) and MTSIGA (MTSIGB) is determined by the DE bit. The FE bit and the DE bit of the four links should be set to the same value respectively. If the FE bit and the DE bit are not equal, the pulse on the MTSFS is ahead. The MTSCK can be selected by the CMS bit to be the same rate as the data rate on the system side (8.192 MHz) or double the data rate (16.384 MHz). The CMS bit of the four links should be set to the same value. If the speed of the MTSCK is double the data rate, there will be two active edges in one bit duration. In this case, the EDGE bit determines the active edge to sample the data on the MTSDA (MTSDB) and MTSIGA (MTSIGB) pins. The pulse on the MTSFS pin is always sampled on its first active edge.

In the Transmit Multiplexed mode, the MTSFS can indicate the Basic frame, CRC Multi-frame and/or Signaling Multi-frame of the first link. The indications are selected by the FSTYP bit. The active polarity of the MTSFS is selected by the FSINV bit. The FSTYP bit and the FSINV bit of the four links should be set to the same value. If the pulse on the MTSFS pin is not an integer multiple of 125 μs, this detection will be indicated by the TCOFAI bit. If the TCOFAE bit is enabled, an interrupt will be reported by the $\overline{INT}$ pin when the TCOFAI bit is '1'.

3.18.2.4 Offset

Bit offset and timeslot offset are both supported in all the operating modes. The offset is between the framing pulse on the TSFSn/MTSFS pin and the start of the corresponding frame input on the TSDn/MTSDA(MTSDB) pin. The signaling bits on the TSIGn/MTSIGA(MTSIGB) pin are always per-timeslot aligned with the data on the TSDn/MTSDA(MTSDB) pin.

Refer to Chapter 3.18.1.4 Offset for the base line without offset in different operating modes and the configuration of the offset.

In Non-multiplexed mode, the timeslot offset can be configured from 0 to 31 timeslots (0 & 31 are included). In Multiplexed mode, the timeslot offset can be configured from 0 to 127 timeslots (0 & 127 are included).

Table 44: Related Bit / Register In Chapter 3.18

Bit	Register	Address (Hex)
TMUX	Backplane Global Configuration	010
MTSDA		
TSLVCK		
TMODE	TBIF Operating Mode	043, 143, 243, 343
MAP[1:0] (T1/J1 only)		
G56K	ID * - Channel Control (for T1/J1) / Timeslot Control (for E1)	TPLC ID * - 01~18 (for T1/J1) / 00~1F (for E1)
GAP		
PCCE	TPLC Control Enable	0CC, 1CC, 2CC, 3CC
FBITGAP (T1/J1 only)	TBIF Option Register	042, 142, 242, 342
FE		
DE		
FSTYP		
FSINV		
CMS		
EDGE	TBIF Bit Offset	045, 145, 245, 345
BOFF[2:0]		
TCOFAI	RTSFS Change Indication	04B, 14B, 24B, 34B
TCOFAE	RTSFS Interrupt Control	04C, 14C, 24C, 34C
TSOFF[6:0]	TBIF TS Offset	044, 144, 244, 344

Note:
* ID means Indirect Register in the Transmit Payload Control function block.

3.19 TRANSMIT PAYLOAD CONTROL

Different test patterns can be inserted in the data stream to be transmitted or the data stream to be transmitted can be extracted to the PRBS Generator/Detector for test in this block.

To enable all the functions in the Transmit Payload Control, the PCCE bit must be set to '1'.

The following methods can be executed on the data input from the TSDn/MTSDA (MTSDB) pins on a per-channel/per-TS basis or on a global basis of the corresponding link (the methods are arranged from the highest to the lowest in priority):

- When the TESTEN bit is enabled and the PRBSDIR bit is '1', the data to be transmitted will be extracted to the PRBS Generator/Detector. The data to be transmitted can be extracted in unframed mode, in 8-bit-based mode or in 7-bit-based mode. This selection is made by the PRBSMODE[1:0] bits. In unframed mode, all the data stream to be transmitted is extracted and the per-channel/per-TS configuration in the TEST bit is ignored. In 8-bit-based mode or in 7-bit-based mode, the data will only be extracted on the channel/timeslot configured by the TEST bit. Refer to Chapter 3.27.1 PRBS Generator / Detector for details.

- Configured by the ZCS[2:0] bits, four types of Zero Code Suppression can be selected to implement to the data of all the channels of the corresponding link. This function is only supported in T1/J1 mode.

- Selected by the GSUBST[2:0] bits, the data of all channels/timeslots of the corresponding link will be replaced by the trunk code set in the DTRK[7:0] bits, the milliwatt pattern defined in Table 36 and Table 37, or the payload loopback data from the Elastic Store Buffer (refer to Chapter 3.27.2.2 Payload Loopback). When the GSUBST[2:0] bits are set to '000', these replacements will be performed on a per-channel/per-TS basis by setting the SUBST[2:0] bits in the corresponding channel/timeslot.

- Controlled by the SIGINS bit, the signaling bits input from the TSIGn/MTSIGA (MTSIGB) pins (after processed by the signaling trunk conditioning replacement and/or valid signaling bits selection) can be inserted into its signaling bit position of the data stream to be transmitted.

- Invert the most significant bit, the even bits and/or the odd bits by setting the SINV, OINV, EINV bits.

- When the TESTEN bit is enabled and the PRBSDIR bit is '0', the data to be transmitted will be replaced by the test pattern generated from the PRBS Generator/Detector. The data to be transmitted can be replaced in unframed mode, in 8-bit-based mode or in 7-bit-based mode. This selection is made by the PRBSMODE[1:0] bits. In unframed mode, all the data stream to be transmitted is replaced and the per-channel/per-TS configuration in the TEST bit is ignored. In 8-bit-based mode or in 7-bit-based mode, the data will only be replaced on the channel/timeslot configured by the TEST bit. Refer to Chapter 3.27.1 PRBS Generator / Detector for details.

The following methods can be executed on the signaling bits input from the TSIGn/MTSIGA (MTSIGB) pins on a per-channel/per-TS basis or on a global basis of the corresponding link. The processed signaling bits will be inserted to the data stream to be transmitted if frame is generated. The methods are arranged from the highest to the lowest in priority:

- Selected by the ABXX bit, the signaling bits can be valid in the upper 2-bit positions of the lower nibble of each channel or in the lower nibble of each channel. The other bits of the channel are Don't Care conditions. This function is only supported in T1/J1 mode ESF/SLC-96 format.

- Enabled by the SIGSNAP bit, the signaling snapshot will be executed. The signaling snapshot means that the signaling bits of the first basic frame are locked and output as the signaling bits of the current whole multi-frame. This function is not supported in T1 DM format.

- Enabled by the GSTRKEN bit, the signaling bits (ABCD) of all channels/timeslots of the corresponding link will be replaced by the signaling trunk conditioning code in the A,B,C,D bits. When the GSTRKEN bit is '0', the replacement can be performed on a per-channel/per-TS basis by setting the STRKEN bit in the corresponding channel/timeslot.

The indirect registers of the Transmit Payload Control are accessed by specifying the address in the ADDRESS[6:0] bits. Whether the data is read from or written into the specified indirect register is determined by the RWN bit and the data is in the D[7:0] bits. The access status is indicated in the BUSY bit. Refer to Chapter 4.5 Indirect Register Access Scheme for details about the indirect registers write/read access.

Table 45: Related Bit / Register In Chapter 3.19

Bit	Register	Address (Hex)
PCCE	TPLC Control Enable	0CC, 1CC, 2CC, 3CC
ABXX (T1/J1 only)		
TESTEN	TPLC / RPLC / PRGD Test Configuration	0C7, 1C7, 2C7, 3C7
PRBSDIR		
PRBSMODE[1:0]		
TEST	ID * - Signaling Trunk Conditioning Code	TPLC ID * - 41~58 (for T1/J1) / 41~4F & 51~5F (for E1)
SIGINS (T1/J1 only)		
A,B,C,D		
STRKEN		
ZCS[2:0] (T1/J1 only)	TPLC Configuration	0CB, 1CB, 2CB, 3CB
GSUBST[2:0]		
SIGSNAP		
GSTRKEN		
DTRK[7:0]	ID * - Data Trunk Conditioning Code	TPLC ID * - 21~38 (for T1/J1) / 20~3F (for E1)
SUBST[2:0]	ID * - Channel Control (for T1/J1) / Timeslot Control (for E1)	TPLC ID * - 01~18 (for T1/J1) / 00~1F (for E1)
SINV		
OINV		
EINV		
ADDRESS[6:0]	TPLC Access Control	0C9, 1C9, 2C9, 3C9
RWN		
D[7:0]	TPLC Access Data	0CA, 1CA, 2CA, 3CA
BUSY	TPLC Access Status	0C8, 1C8, 2C8, 3C8

Note:
* ID means Indirect Register in the Transmit Payload Control function block.

3.20 FRAME GENERATOR

3.20.1 GENERATION

3.20.1.1 T1 / J1 Mode

In T1/J1 mode, the data to be transmitted can be generated as Super-Frame (SF), Extended Super-Frame (ESF), T1 Digital Multiplexer (DM) or Switch Line Carrier - 96 (SLC-96) format.

3.20.1.1.1 Super Frame (SF) Format

The SF is generated when the FDIS bit is '0'.

The Frame Alignment Pattern ('100011011100' for T1 / '10001101110X' for J1) will replace the F-bit of each frame if the FDIS bit is set to '0'. The F-bit of the 12th frame in J1 mode should be '0' unless Yellow alarm signal is transmitted.

When the FDIS bit is '0', one Ft bit (the F-bit in odd frame, refer to Table 12) will be inverted if the FtINV bit is set; one Fs bit (the F-bit in even frame, refer to Table 12) will be inverted if the FsINV bit is set.

When the FDIS bit is '0', configured by the MIMICEN bit, the mimic pattern can be inserted into the bit right after each F-bit. The content of the mimic pattern is the same as the F-bit. The mimic pattern insertion is for diagnostic purpose.

The Yellow alarm signal will be manually inserted in the data stream to be transmitted when the XYEL bit is set, or the Yellow alarm signal will be inserted automatically by setting the AUTOYELLOW bit when Red alarm is declared in the received data stream. The pattern and the position of the Yellow alarm is different in T1 and J1 modes:

- In T1 mode, the Yellow alarm signal is logic 0 on the 2nd bit of each channel;
- In J1 mode, the Yellow alarm signal is logic 1 on the 12th F-bit position.

3.20.1.1.2 Extended Super Frame (ESF) Format

The ESF is generated when the FDIS bit is '0'.

The Frame Alignment Pattern ('001011') will replace the F-bit in Frame (4n) (0<n<7) if the FDIS bit is set to '0'.

When the FDIS bit is '0', one Frame Alignment bit (refer to Table 13 for its position) will be inverted if the FsINV bit is set.

When the FDIS bit and the CRCBYP bit are both '0's, the calculated 6-bit CRC of the previous ESF frame will be inserted in the current CRC-bit positions in every 4th frame starting with Frame 2 (refer to Table 13) of the current ESF frame.

When the FDIS bit is '0', one 6-bit CRC pattern will be inverted if the CRCINV bit is set.

When the FDIS bit is '0', the DL bit (refer to Table 13) can be replaced with the Yellow alarm signal, the Bit-Oriented Code (refer to Chapter 3.20.4 Bit-Oriented Message Transmitter (T1/J1 Only)), the Automatic Performance Report Message (refer to Chapter 3.20.3 Automatic Performance Report Message (T1/J1 Only)), the HDLC data (refer to Chapter 3.20.2 HDLC Transmitter) or the idle code ('FFFF' for T1 / 'FF7E' for J1). The latter four kinds of replacements are enabled only if the FDLBYP bit is set to '0'. When all of the five kinds of replacements are enabled, the priority from highest to lowest is: Yellow alarm signal, Bit-Oriented Code, Automatic Performance Report Message, HDLC data and idle code.

The Yellow alarm signal will be manually inserted in the data stream to be transmitted when the XYEL bit is set, or the Yellow alarm signal will be inserted automatically by setting the AUTOYELLOW bit when Red alarm is declared in the received data stream. The Yellow alarm signal is transmitted in the DL bit position. Its pattern is 'FF00' in T1 mode or 'FFFF' in J1 mode.

When the FDIS bit is '0', configured by the MIMICEN bit, the mimic pattern can be inserted into the bit right after each F-bit. The content of the mimic pattern is the same as the F-bit. The mimic pattern insertion is for diagnostic purpose.

3.20.1.1.3 T1 Digital Multiplexer (DM) Format (T1 only)

The T1 DM is generated when the FDIS bit is '0'.

The Frame Alignment Pattern ('100011011100') will replace the F-bit of each frame if the FDIS bit is set to '0'.

When the FDIS bit is '0', one Ft bit (the F-bit in odd frame, refer to Table 14) will be inverted if the FtINV bit is set; one Fs bit (the F-bit in even frame, refer to Table 14) will be inverted if the FsINV bit is set.

When the FDIS bit is '0', configured by the MIMICEN bit, the mimic pattern can be inserted into the bit right after each F-bit. The content of the mimic pattern is the same as the F-bit. The mimic pattern insertion is for diagnostic purpose.

When the FDIS bit is '0', the DDS pattern ('0XX11101') will replace the Bit 8 & 5~1 of each Channel 24 (refer to Table 14).

When the FDIS bit is '0', one 6-bit DDS pattern will be inverted if the DDSINV bit is set.

The 'D' bit in Bit 7 of each Channel 24 can be replaced with the HDLC data when the FDIS bit and the FDLBYP bit are both '0's. (Refer to Chapter 3.20.2 HDLC Transmitter for details).

The Yellow alarm signal will be manually inserted in the data stream to be transmitted when the XYEL bit is set, or the Yellow alarm signal will be inserted automatically by setting the AUTOYELLOW bit when Red alarm is declared in the received data stream. The Yellow alarm signal is '0' transmitted in the 'Y' bit in Bit 6 of each Channel 24. The 'Y' bit should be '1' when there is no Yellow alarm signal to be transmitted.

3.20.1.1.4 Switch Line Carrier - 96 (SLC-96) Format (T1 only)

The SLC-96 is generated when the FDIS bit is '0'.

The Frame Alignment Pattern ('001000110111001000110111'), the Spoiler Bit and all the other Ft bits (the F-bit in odd frame) will replace their F-bit (refer to Table 15 for their values and positions) if the FDIS bit is set to '0'.

When the FDIS bit is '0', one Synchronization Fs bit will be inverted if the FsINV bit is set; one Ft bit will be inverted if the FtINV bit is set.

When the FDIS bit and the FDLBYP bit are both '0's, the contents in the XDL0, XDL1 & XDL2 registers will replace the Concentrator (C) bits, the Maintenance (M) bits, the Alarm (A) bits and the Switch (S) bits respectively (refer to Table 15).

When the FDIS bit is '0', configured by the MIMICEN bit, the mimic pattern can be inserted into the bit right after each F-bit. The content of

the mimic pattern is the same as the F-bit. The mimic pattern insertion is for diagnostic purpose.

The Yellow alarm signal will be manually inserted in the data stream to be transmitted when the XYEL bit is set, or the Yellow alarm signal will be inserted automatically by setting the AUTOYELLOW bit when Red alarm is declared in the received data stream. The Yellow alarm signal is logic 0 on the 2nd bit of each channel.

3.20.1.1.5 Interrupt Summary

At the first bit of each basic frame, the BFI bit will be set. In this condition, if the BFE bit is enabled, an interrupt will be reported by the $\overline{INT}$ pin.

At the first bit of each SF/ESF/T1 DM/SLC-96 multiframe, the MFI bit will be set. In this condition, if the MFE bit is enabled, an interrupt will be reported by the $\overline{INT}$ pin.

Table 46: Related Bit / Register In Chapter 3.20.1.1

Bit	Register	T1/J1 Address (Hex)
FDIS	T1/J1 Mode	062, 162, 262, 362
CRCBYP		
FDLBYP		
FtINV	Error Insertion	06F, 16F, 26F, 36F
FsINV		
CRCINV		
DDSINV		
MIMICEN	FGEN Maintenance 1	06C, 16C, 26C, 36C
XYEL	FGEN Maintenance 0	06B, 16B, 26B, 36B
AUTOYELLOW		
C[11:1]	XDL1 & XDL0	066, 166, 266, 366 & 065, 165, 265, 365
M[3:1]	XDL1	066, 166, 266, 366
A[2:1]	XDL2	067, 167, 267, 367
S[4:1]		
BFI	FGEN Interrupt Indication	06E, 16E, 26E, 36E
MFI		
BFE	FGEN Interrupt Control	06D, 16D, 26D, 36D
MFE		

3.20.1.2 E1 Mode

In E1 mode, the Frame Generator can generate Basic Frame, CRC-4 Multi-Frame and Channel Associated Signaling (CAS) Multi-Frame. The Frame Generator can also transmit alarm indication signal when special conditions occurs in the received data stream. International bits, National bits and Extra bits replacements and data inversions are all supported in the Frame Generator.

The generation of the Basic frame, CRC Multi-Frame and Channel Associated Signaling (CAS) Multi-Frame are controlled by the FDIS bit, the GENCRC bit, the CRCM bit and the SIGEN bit. Refer to Table 47 for details.

Table 47: E1 Frame Generation

Desired Frame Type	FDIS	GENCRC	CRCM	SIGEN
Basic Frame	0	0	X	X
	0	1	0	X
CRC Multi-Frame	0	1	0	X
Modified CRC Multi-Frame	0	1	1	X
Channel Associated Signaling (CAS) Multi-Frame	0	0	X	1
	0	1	0	1

When the Basic frame is generated, the Frame Alignment Sequence (FAS) ('0011011') will replace the Bit 2 ~ Bit 8 of TS0 of each even frame; the NFAS bit ('1') will replace the Bit 2 of TS0 of each odd frame. If the FAS1INV bit is set, one FAS bit will be inverted; if the FASALLINV bit is set, one 7-bit FAS pattern will be inverted; if the NFAS-INV bit is set, one NFAS bit will be inverted.

When the Basic frame is generated, if the SiDIS bit is '0', the value set in the Si[1] and Si[0] bits will replace the International bit (Bit 1) of FAS frame and NFAS frame respectively.

When the Basic frame is generated, the Remote Alarm Indication (RAI) can be transmitted as logic 1 in the A bit position. It is transmitted manually when the REMAIS bit is '1'. It can also be transmitted automatically when the AUTOYELLOW bit is set to '1'. In this case, the RAI transmission criteria are selected by the G706RAI bit.

When the Basic frame is generated, the setting in the SaX[1] bit will be transmitted in the Sa bit position if enabled by the corresponding SaXEN bit ('X' is from 4 to 8).

The CRC Multi-Frame is generated on the base of the Basic frame generation. When it is generated, the CRC Multi-Frame alignment pattern ('001011') will replace the Bit 1 of TS0 of the first 6 odd frames; the calculated 4-bit CRC of the previous Sub-Multi-Frame will be inserted in the CRC-bit positions of the current Sub-Multi-Frame. The CRC-bit position is the Bit 1 of TS0 of each even frame. Refer to Table 18 for the CRC Multi-Frame structure. If the CRCPINV bit is set, one 6-bit CRC Multi-Frame alignment pattern will be inverted; if the CRCINV bit is set, all 4 calculated CRC bits in one Sub-Multi-Frame will be inverted.

When the CRC Multi-Frame is generated, since 14 International bit positions have been occupied by the CRC Multi-Frame alignment pattern and CRC-4 checking bits, the remaining 2 International bit positions are inserted by the E bits. The control over the E bits is illustrated in Table 48.

Table 48: Control Over E Bits

FEBEDIS	OOCMFV	SiDIS	E Bits Insertion
0	0	X	A single zero is inserted into the E bit when a CRC-4 Error event is detected in the receive path. (the E1 bit corresponds to SMFI and the E2 bit corresponds to SMFII)
0	1	X	The value in the Si[1] bit is inserted into the E1 bit position. The value in the Si[0] bit is inserted into the E2 bit position.
1	X	0	The value in the Si[1] bit is inserted into the E1 bit position. The value in the Si[0] bit is inserted into the E2 bit position.
1	X	1	The E bit positions are unchanged.

When the CRC Multi-Frame is generated, the setting in the SaX[1:4] bits will be transmitted in the Sa bit position if enabled by the corresponding SaXEN bit ('X' is from 4 to 8).

The Channel Associated Signaling (CAS) Multi-Frame is generated on the base of the Basic frame generation. When it is generated, the Signaling Multi-Frame alignment pattern ('0000') will replace the high nibble (Bit 1 ~ Bit 4) of TS16 of every 16 Basic frames. If the CASPINV bit is set, one 4-bit Signaling Multi-Frame alignment pattern will be inverted.

When the Signaling Multi-Frame is generated, if the XDIS bit is '0', the value set in the FGEN Extra register will be inserted into the Extra bits (the Bit 5, 7 & 8 of TS16 of Frame 0 of the Signaling Multi-Frame).

When the Signaling Multi-Frame is generated, the value in the MFAIS bit will be continuously transmitted in the Y bit position (the Bit 6 of TS16 of Frame 0 of the Signaling Multi-Frame).

When the Signaling Multi-Frame is generated, all the bits in TS16 can be overwritten by all 'Zero's or all 'One's by setting the TS16LOS bit or the TS16AIS bit respectively. The all zeros overwritten takes a higher priority.

When the Modified CRC Multi-Frame is generated, only the Sa bit position and the calculated CRC-4 bit position can be changed. All the other bits are transparently transmitted unless all 'One's or all 'Zero's are transmitted (refer to Chapter 3.20.6 All 'Zero's & All 'One's).

The frame can only be generated on the base of the FDIS bit being '0'. If the FDIS bit is set to '1', the data received from the Transmit Payload Control will be transmitted transparently to the HDLC Transmitter.

3.20.1.2.1 Interrupt Summary

In E1 mode, the interrupt is summarized in Table 49.

When there are conditions meeting the interrupt sources, the corresponding Interrupt Indication bit will be set. When the Interrupt Indication bit is '1', if enabled by the corresponding Interrupt Enable bit, an interrupt will be reported by the $\overline{INT}$ pin.

Table 49: Interrupt Summary In E1 Mode

Interrupt Sources	Interrupt Indication Bit	Interrupt Enable Bit
At the first bit of each FAS.	FASI	FASE
At the first bit of each Basic frame.	BFI	BFE
At the first bit of each CRC Multi-Frame.	MFI	MFE
At the first bit of each CRC Sub Multi-Frame.	SMFI	SMFE
At the first bit of each Signaling Multi-Frame.	SIGMFI	SIGMFE

Table 50: Related Bit / Register In Chapter 3.20.1.2

Bit	Register	E1 Address (Hex)
FDIS	E1 Mode	062, 162, 262, 362
GENCRC		
CRCM		
SIGEN		
SiDIS		
FEBEDIS		
XDIS		
FAS1INV	Error Insertion	06F, 16F, 26F, 36F
FASALLINV		
NFASINV		
CRCPINV		
CASPINV		
CRCINV		
Si[1]	FGEN International Bit	063, 163, 263, 363
Si[0]		
REMAIS	FGEN Maintenance 0	06B, 16B, 26B, 36B
AUTOYELLOW		
G706RAI		
MFAIS		
TS16LOS		
TS16AIS		
SaX[1:4] (‘X’ is from 4 to 8)	Sa4 Code-word ~ Sa8 Code-word	065 ~ 069, 165 ~ 169, 265 ~ 269, 365 ~ 369
SaXEN (‘X’ is from 4 to 8)	FGEN Sa Control	064, 164, 264, 364
OOCMFV	FRMR Status	04F, 14F, 24F, 34F
X[0:2]	FGEN Extra	06A, 16A, 26A, 36A
FASI	FGEN Interrupt Indication	06E, 16E, 26E, 36E
BFI		
MFI		
SMFI		
SIGMFI		
FASE	FGEN Interrupt Control	06D, 16D, 26D, 36D
BFE		
MFE		
SMFE		
SIGMFE		

3.20.2 HDLC TRANSMITTER

The HDLC Transmitter inserts the data into the selected position to form HDLC or SS7 packet data stream.

3.20.2.1 HDLC Channel Configuration

In T1/J1 mode ESF & T1 DM formats, three HDLC Transmitters (#1, #2 & #3) per link are provided for HDLC insertion to the data stream to be transmitted. In T1/J1 mode SF & SLC-96 formats, two HDLC Transmitters (#2 & #3) per link are provided for HDLC insertion. In E1 mode, three HDLC Transmitters (#1, #2 & #3) per link are provided for HDLC insertion. Except in T1/J1 mode ESF & T1 DM formats, the HDLC channel of HDLC Transmitter #1 is fixed in the DL bit (in ESF format) and D bit in CH24 (in T1 DM format) respectively (refer to Table 13 & Table 14), the other HDLC channel is configured as the follows:

1. Set the EVEN bit and/or the ODD bit to select the even and/or odd frames;
2. Set the TS[4:0] bits to define the channel/timeslot of the assigned frame;
3. Set the BITEN[7:0] bits to select the bits of the assigned channel/timeslot.

Then all the functions of the HDLC Transmitter will be enabled only if the corresponding TDLEN bit is set to ‘1’.

Table 51: Related Bit / Register In Chapter 3.20.2.1

Bit	Register	Address (Hex)
EVEN	THDLC1 Assignment (E1 only) / THDLC2 Assignment / THDLC3 Assignment	085, 185, 285, 385(E1 only) / 086, 186, 286, 386 / 087, 187, 287, 387
ODD		
TS[4:0]		
BITEN[7:0]	THDLC1 Bit Select (E1 only) / THDLC2 Bit Select / THDLC3 Bit Select	088, 188, 288, 388 (E1 only) / 089, 189, 289, 389 / 08A, 18A, 28A, 38A
TDLEN3	THDLC Enable Control	084, 184, 284, 384
TDLEN2		
TDLEN1		

3.20.2.2 Two HDLC Modes

Two modes are selected by the THDLCM bit in the HDLC Transmitter. The two modes are: HDLC mode (per Q.921) and SS7 (per Q.703).

3.20.2.2.1 HDLC Mode

A FIFO buffer is used to store the HDLC data written in the DAT[7:0] bits. The FIFO depth is 128 bytes. When it is full, it will be indicated by the FUL bit. When it is empty, it will be indicated by the EMP bit.

If an entire HDLC packet is stored in the FIFO indicated by the EOM bit, or if the data in the FIFO exceeds the upper threshold set by the HL[1:0] bits, the data in the FIFO will be transmitted. The opening flag (‘01111110’) will be prepended before the data automatically. The transmission will not stop until the entire HDLC data are transmitted. Then the 2-byte FCS and the closing flag (‘01111110’) will be added to the end of the HDLC data automatically. During the HDLC data transmission, a zero is stuffed automatically into the serial output data if there are five consecutive ’One’s ahead.

The abort sequence (‘01111111’) will be inserted to the HDLC packet anytime when the ABORT bit is set. Or when the FIFO is empty and the transmitted last byte is not the end of the current HDLC packet, the abort sequence will be transmitted automatically.

If the TDLEN bit is enabled and there is no HDLC packet in the FIFO to be transmitted, the 7E (Hex) flag will always be transmitted.

3.20.2.2.2 SS7 Mode

A FIFO buffer is used to store the SS7 data written in the DAT[7:0] bits. The FIFO depth is 128 bytes. When it is full, it will be indicated by the FUL bit. When it is empty, it will be indicated by the EMP bit.

If an entire SS7 packet is stored in the FIFO indicated by the EOM bit, or if the data in the FIFO exceeds the upper threshold set by the HL[1:0] bits, the data in the FIFO will be transmitted. The opening flag (‘01111110’) will be prepended before the data automatically. The transmission will not stop until the entire SS7 data are transmitted. Then the 2-byte FCS and the closing flag (‘01111110’) will be added to the end of the SS7 data automatically. During the SS7 data transmission, a zero is stuffed automatically into the serial output data if there are five consecutive ’One’s ahead.

The abort sequence (‘01111111’) will be inserted to the SS7 packet anytime when the ABORT bit is set. Or when the FIFO is empty and the last transmitted byte is not the end of the current SS7 packet, the abort sequence will be transmitted automatically.

When the FIFO is empty, if less than 16 bytes are written into the FIFO and the XREP bit is set to ‘1’, these bytes in the FIFO will be transmitted repeatedly with the opening flag, FCS and closing flag, until the XREP bit is disabled and the current packet transmission is finished. However, during the cyclic transmission period, the data written into the FIFO will not be transmitted.

If the AUTOFISU bit is set and there is no data in the FIFO to be transmitted, the 7E (Hex) flags will be transmitted N times (the ‘N’ is determined by the FL[1:0] bits), then the FISU packet will be transmitted (refer to Figure 14) with the BSN and FSN the same as the last transmitted packet.

If the TDLEN bit is enabled and there is no SS7 packet in the FIFO to be transmitted, the 7E (Hex) flag will always be transmitted.

3.20.2.3 Interrupt Summary

In both of the two HDLC modes, when the data in the FIFO is below the lower threshold set by the LL[1:0] bits, it will be indicated by the RDY bit. When there is a transition (from '0' to '1') on the RDY bit, the RDYI bit will be set. In this case, if enabled by the RDYE bit, an interrupt will be reported by the $\overline{INT}$ pin.

In both of the two HDLC modes, when the FIFO is empty and the last transmitted byte is not the end of the current HDLC/SS7 packet, the UDRUNI bit will be set. In this case, if enabled by the UDRUNE bit, an interrupt will be reported by the $\overline{INT}$ pin.

3.20.2.4 Reset

The HDLC Transmitter will be reset when there is a transition from '0' to '1' on the TRST bit. The reset will clear the FIFO.

Table 52: Related Bit / Register In Chapter 3.20.2.2 ~ Chapter 3.20.2.4

Bit	Register	Address (Hex)
THDLCM	THDLC1 Control / THDLC2 Control / THDLC3 Control	0A7, 1A7, 2A7, 3A7 / 0A8, 1A8, 2A8, 3A8 / 0A9, 1A9, 2A9, 3A9
EOM		
ABORT		
XREP		
AUTOFISU		
TRST		
DAT[7:0]	THDLC1 Data / THDLC2 Data / THDLC3 Data	0AD, 1AD, 2AD, 3AD / 0AE, 1AE, 2AE, 3AE / 0AF, 1AF, 2AF, 3AF
FUL	TFIFO1 Status / TFIFO2 Status / TFIFO3 Status	0B0, 1B0, 2B0, 3B0 / 0B1, 1B1, 2B1, 3B1 / 0B2, 1B2, 2B2, 3B2
EMP		
RDY		
TDLEN3	THDLC Enable Control	084, 184, 284, 384
TDLEN2		
TDLEN1		
HL[1:0]	TFIFO1 Threshold / TFIFO2 Threshold / TFIFO3 Threshold	0AA, 1AA, 2AA, 3AA / 0AB, 1AB, 2AB, 3AB / 0AC, 1AC, 2AC, 3AC
FL[1:0]		
LL[1:0]		
RDYI	THDLC1 Interrupt Indication / THDLC2 Interrupt Indication / THDLC3 Interrupt Indication	0B6, 1B6, 2B6, 3B6 / 0B7, 1B7, 2B7, 3B7 / 0B8, 1B8, 2B8, 3B8
UDRUNI		
RDYE	THDLC1 Interrupt Control / THDLC2 Interrupt Control / THDLC3 Interrupt Control	0B3, 1B3, 2B3, 3B3 / 0B4, 1B4, 2B4, 3B4 / 0B5, 1B5, 2B5, 3B5
UDRUNE		

3.20.3 AUTOMATIC PERFORMANCE REPORT MESSAGE (T1/J1 ONLY)

The Automatic Performance Report Message (APRM) can only be transmitted in the ESF format in T1/J1 mode.

Five kinds of events are counted every second in the APRM:

1. The Bipolar Violation (BPV) Error / HDB3 Code Violation (CV) Error event detected in the B8ZS/HDL3/AMI Decoder;
2. The CRC-6 Error event detected in the Frame Processor;
3. The Frame Alignment Bit Error event detected in the Frame Processor;
4. The Severely Frame Alignment Bit Error event detected in the Frame Processor;
5. The Buffer Slip event occurred in the Elastic Store Buffer.

Enabled by the AUTOPRM bit, the Automatic Performance Report Message is generated every one second and transmitted on the DL bit positions. The APRM format is illustrated in Table 53.

Table 53: APRM Message Format

Octet No.	Bit 8	Bit 7	Bit 6	Bit 5	Bit 4	Bit 3	Bit 2	Bit 1
1	Flag (‘01111110’)							
2	SAPI (‘001110C/R0’)							
3	TEI (‘00000001’)							
4	Control (‘00000011’)							
5	G3	LV	G4	U1	U2	G5	SL	G6
6	FE	SE	LB	G1	R	G2	Nm	Ni
7	G3	LV	G4	U1	U2	G5	SL	G6
8	FE	SE	LB	G1	R	G2	Nm	Ni
9	G3	LV	G4	U1	U2	G5	SL	G6
10	FE	SE	LB	G1	R	G2	Nm	Ni
11	G3	LV	G4	U1	U2	G5	SL	G6
12	FE	SE	LB	G1	R	G2	Nm	Ni
13	FCS							
14								

The APRM is transmitted bit by bit from Bit 1 to Bit 8 and from Octet No. 1 to Octet No. 14. In the above table, the value in the C/R bit position, the R bit position, the U1 bit position, the U2 bit position and the LB bit position are determined by the CRBIT bit, the RBIT bit, the U1BIT bit, the U2BIT bit and the LBBIT bit in the APRM Control register respectively.

The Nm and Ni bit position is a module 4 counter.

The remaining bits in Octet No.5 to Octet No. 12 interpret the event numbers counted by the APRM. The details are listed in Table 54. Their default value are ‘0’s.

Table 54: APRM Interpretation

A Logic 1 In The Following Bit Position	Interpretation
G1	CRC-6 Error event = 1
G2	1 < CRC-6 Error event ≤ 5
G3	5 < CRC-6 Error event ≤ 10
G4	10 < CRC-6 Error event ≤ 100
G5	100 < CRC-6 Error event ≤ 319
G6	CRC-6 Error event > 320
SE	Severely Frame Alignment Bit Error event ≥ 1
FE	Frame Alignment Bit Error event ≥ 1
LV	Bipolar Violation (BPV) Error / HDB3 Code Violation (CV) Error event ≥ 1
SL	Buffer Slip event ≥ 1

Table 55: Related Bit / Register In Chapter 3.20.3

Bit	Register	T1/J1 Address (Hex)
AUTOPRM	APRM Control	07F, 17F, 27F, 37F
CRBIT		
RBIT		
U1BIT		
U2BIT		
LBBIT		

3.20.4 BIT-ORIENTED MESSAGE TRANSMITTER (T1/J1 ONLY)

The Bit Oriented Message (BOM) can only be transmitted in the ESF format in T1/J1 mode.

The BOM pattern is '111111110XXXXXX0' which occupies the DL of the F-bit in the ESF format. The six 'X's represent the code that is programmed in the XBOC[5:0] bits. The BOM is transmitted only if the XBOC[5:0] bits are not all 'One's.

3.20.5 INBAND LOOPBACK CODE GENERATOR (T1/J1 ONLY)

The Inband Loopback Code Generator can only transmit inband loopback code in a framed or unframed T1/J1 data stream.

The length and the content of the inband loopback code are programmed in the CL[1:0] bits and the IBC[7:0] bits respectively. The code can only be transmitted when the IBCDEN bit is enabled. In framed mode, which is configured by the IBCDUNFM bit, the bits in all 24 channels are overwritten with the inband loopback code and the F-bit is not changed. In unframed mode, which is configured by the IBCDUNFM bit, all the bits in 24 channels and the F-bit are overwritten with the inband loopback code.

Table 56: Related Bit / Register In Chapter 3.20.4 & Chapter 3.20.5

Bit	Register	T1/J1 Address (Hex)
XBOC[5:0]	XBOC Code	080, 180, 280, 380
IBC[7:0]	XIBC Code	075, 175, 275, 375
CL[1:0]	XIBC Control	074, 174, 274, 374
IBCDEN		
IBCDUNFM		

3.20.6 ALL 'ZERO'S & ALL 'ONE'S

After all the above processes, all 'One's or all 'Zero's will overwrite all the data stream if the TAIS bit and the TXDIS bit are set. The all zeros transmission takes a higher priority.

3.20.7 CHANGE OF FRAME ALIGNMENT

Any transition (from '0' to '1' or from '1' to '0') on the COFAEN bit will lead to one-bit deletion or one-bit repetition in the data stream to be transmitted, that is, to change the frame alignment position. The one-bit deletion or repetition occurs randomly.

3.21 TRANSMIT BUFFER

Transmit Buffer can be used in the circumstances that backplane timing is different from the line side timing in Transmit Slave mode.

The function of timing option is also integrated in this block. The source of the transmit clock can be selected in the recovered clock from the line side, the processed clock from the backplane or the master clock generated by the clock generator.

In Transmit Master mode, the Transmit Buffer is bypassed automatically. The source of the transmit clock can be selected between the recovered clock from the line side and the master clock generated by the internal clock generator (1.544 MHz in T1/J1 mode or 2.048 MHz in E1 mode). The selection is made by the XTS bit.

In Transmit Clock Slave T1/J1 mode E1 rate, for the backplane timing is 2.048 MHz from backplane and the line timing is 1.544 MHz from the internal clock generator, the Transmit Buffer is selected automatically to absorb high frequency mapping jitter due to the E1 to T1/J1 mapping scheme. In this case, 1.544 MHz must be locked to 2.048 MHz by PLL of the internal clock generator. The XTS bit in the Transmit Timing Option register does not take effect.

In other Transmit Clock Slave modes, whether the Transmit Buffer is bypassed and the source of the transmit clock selection are selected by the XTS bit. When the XTS bit is set to '1', line side timing is from internal clock generator, but backplane timing is from backplane, so the Transmit Buffer is selected to accommodate the different clocks. If these two clocks are not locked, an internal slip will occur in the Transmit Buffer. The source of the transmit clock is from the master clock generated by the internal clock generator (1.544 MHz in T1/J1 mode or 2.048 MHz in E1 mode). When the XTS bit is set to '0', the line side timing is also from the backplane timing, so the Transmit Buffer is bypassed. The source of the transmit clock is from the processed clock from the backplane.

In Transmit Multiplexed mode, whether the Transmit Buffer is bypassed and the source of the transmit clock selection are the same as that described in other Transmit Clock Slave modes.

In most applications of Transmit Clock Slave mode, the XTS bit can be set to '0' to bypass the Transmit Buffer (The Transmit Buffer is selected automatically in T1/J1 mode E1 rate).

Table 57: Related Bit / Register In Chapter 3.20.6, Chapter 3.20.7 & Chapter 3.21

Bit	Register	Address (Hex)
TAIS	FGEN Maintenance 1	06C, 16C, 26C, 36C
TXDIS		
COFAEN		
XTS	Transmit Timing Option	070, 170, 270, 370

3.22 ENCODER

3.22.1 LINE CODE RULE

3.22.1.1 T1/J1 Mode

In T1/J1 mode, the B8ZS line code rule or the AMI line code rule can be selected by the T_MD bit.

3.22.1.2 E1 Mode

In E1 mode, the HDB3 line code rule or the AMI line code rule can be selected by the T_MD bit.

3.22.2 BPV ERROR INSERTION

For test purpose, a BPV error can be inserted to the data stream to be transmitted by a transition from '0' to '1' on the BPV_INS bit.

3.22.3 ALL 'ONE'S INSERTION

When the LOS is detected in the receive path, all 'One's will be inserted automatically to the data stream to be transmitted by setting the ATAO bit.

Table 58: Related Bit / Register In Chapter 3.22

Bit	Register	Address (Hex)
T_MD	Transmit Configuration 0	022, 122, 222, 322
BPV_INS	Maintenance Function Control 2	031, 131, 231, 331
ATAO	Maintenance Function Control 1	02C, 12C, 22C, 32C

3.23 TRANSMIT JITTER ATTENUATOR

The Transmit Jitter Attenuator of each link can be chosen to be used or not. This selection is made by the TJA_E bit.

The Jitter Attenuator consists of a FIFO and a DPLL, as shown in Figure 5.

The FIFO is used as a pool to buffer the jittered input data, then the data is clocked out of the FIFO by a de-jittered clock. The depth of the FIFO can be 32 bits, 64 bits or 128 bits, as selected by the TJA_DP[1:0] bits. Accordingly, the constant delay produced by the Jitter Attenuator is 16 bits, 32 bits or 64 bits. The 128-bit FIFO is used when large jitter tolerance is expected, and the 32-bit FIFO is used in delay sensitive applications.

The DPLL is used to generate a de-jittered clock to clock out the data stored in the FIFO. The DPLL can only attenuate the incoming jitter whose frequency is above Corner Frequency (CF). The jitter which frequency is lower than the CF passes through the DPLL without any attenuation. In T1/J1 applications, the CF of the DPLL can be 5 Hz or 1.26 Hz, as selected by the TJA_BW bit. In E1 applications, the CF of the DPLL can be 6.77 Hz or 0.87 Hz, as selected by the TJA_BW bit. The lower the CF is, the longer time is needed to achieve synchronization.

If the incoming data moves faster than the outgoing data, the FIFO will overflow. If the incoming data moves slower than the outgoing data, the FIFO will underflow. The overflow or underflow is captured by the TJA_IS bit. When the TJA_IS bit is ‘1’, an interrupt will be reported on the $\overline{\text{INT}}$ pin if enabled by the TJA_IE bit.

To avoid overflowing or underflowing, the JA-Limit function can be enabled by setting the TJA_LIMT bit. When the JA-Limit function is enabled, the speed of the outgoing data will be adjusted automatically if the FIFO is close to its full or emptiness. The criteria of speed adjustment start are listed in Table 6. Though the LA-Limit function can reduce the possibility of FIFO overflow and underflow, the quality of jitter attenuation is deteriorated.

Selected by the TJITT_TEST bit, the real time interval between the read and write pointer of the FIFO or the peak-peak interval between the read and write pointer of the FIFO can be indicated in the TJITT[6:0] bits. When the TJITT_TEST bit is ‘0’, the current interval between the read and write pointer of the FIFO will be written into the TJITT[6:0] bits. When the TJITT_TEST bit is ‘1’, the current interval is compared with the old one in the TJITT[6:0] bits and the larger one will be indicated by the TJITT[6:0] bits.

The performance of Receive Jitter Attenuator meets the ITUT I.431, G.703, G.736 - 739, G.823, G.824, ETSI 300011, ETSI TBR 12/13, AT&T TR62411, TR43802, TR-TSY 009, TR-TSY 253, TR-TRY 499 standards. Refer to Chapter 7.10 Jitter Tolerance and Chapter 7.10 Jitter Tolerance for details.

Table 59: Related Bit / Register In Chapter 3.23

Bit	Register	Address (Hex)
TJA_E	Transmit Jitter Attenuation Configuration	021, 121, 221, 321
TJA_DP[1:0]		
TJA_BW		
TJA_LIMT		
TJITT_TEST		
TJA_IS	Interrupt Status 1	03B, 13B, 23B, 33B
TJA_IE	Interrupt Enable Control 1	034, 134, 234, 334
TJITT[6:0]	Transmit Jitter Measure Value Indication	038, 138, 238, 338

3.24 WAVEFORM SHAPER / LINE BUILD OUT

According to the various cables, configured by the PULS[3:0] bits, three ways of manipulating the waveform shaper can be selected before the data is transmitted:

1. Preset Waveform Template;
2. Line Build Out (LBO) Filter (T1 only);
3. User-Programmable Arbitrary Waveform.

3.24.1 PRESET WAVEFORM TEMPLATE

The preset waveform template is provided for short haul applications.

3.24.1.1 T1/J1 Mode

In T1/J1 applications, the waveform template is shown in Figure 31, which meets T1.102 and G.703, and it is measured in the far end as shown in Figure 32.

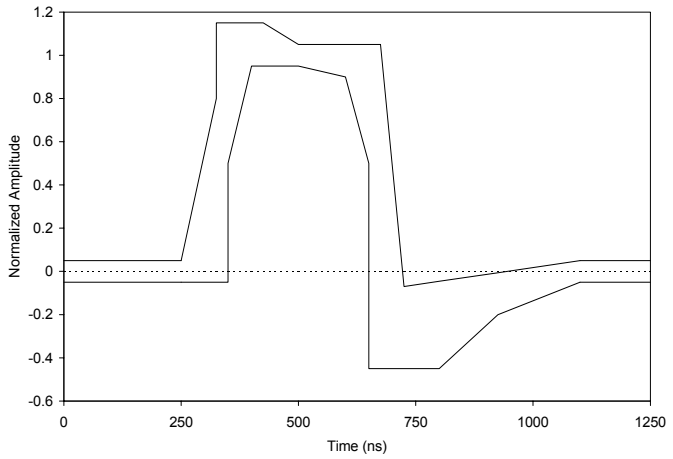

Figure 31. DSX-1 Waveform Template

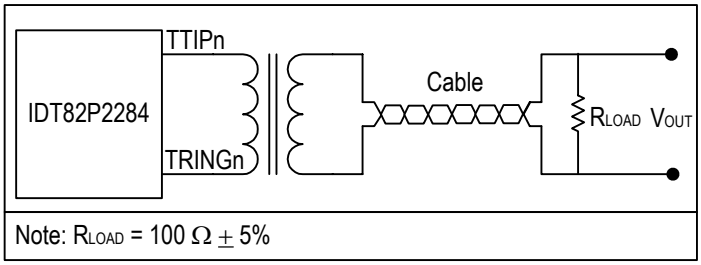

Figure 32. T1/J1 Pulse Template Measurement Circuit

In T1 applications, to meet the template, five preset waveform templates are provided corresponding to five grades of cable length. The selection is made by the PULS[3:0] bits. In J1 applications, the PULS[3:0] bits should be set to '0010'. The details are listed in Table 60.

Table 60: PULS[3:0] Setting In T1/J1 Mode

Cable Configuration	PULS[3:0]
T1 - 0 ~ 133 ft	0 0 1 0
T1 - 133 ~ 266 ft	0 0 1 1
T1 - 266 ~ 399 ft	0 1 0 0
T1 - 399 ~ 533 ft	0 1 0 1
T1 - 533 ~ 655 ft	0 1 1 0
J1 - 0 ~ 655 ft	0 0 1 0

3.24.1.2 E1 Mode

In E1 applications, the waveform template is shown in Figure 33, which meets G.703, and it is measured on the near line side as shown in Figure 34.

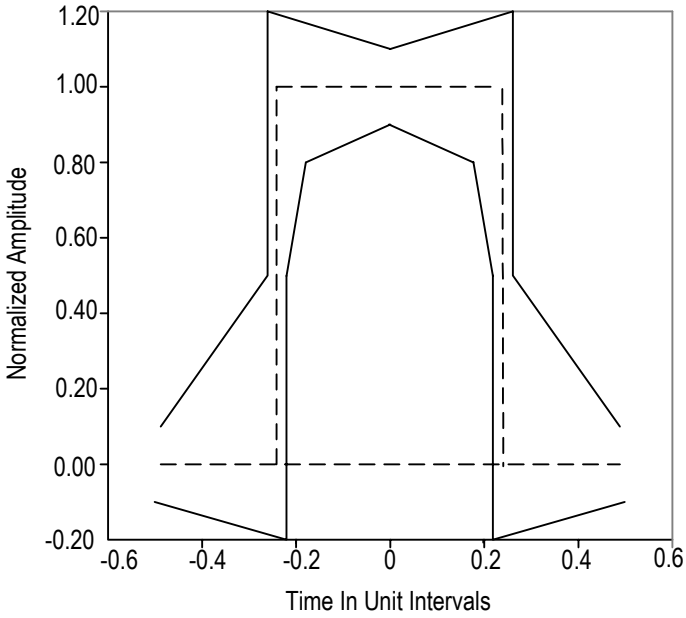

Figure 33. E1 Waveform Template

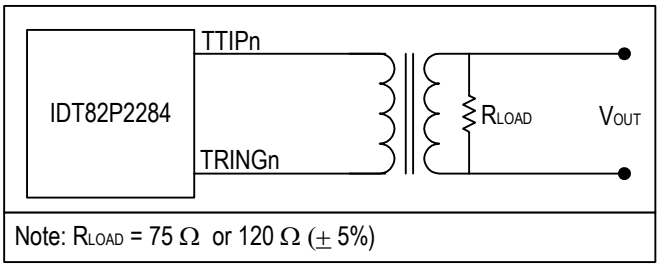

Figure 34. E1 Pulse Template Measurement Circuit

To meet the template, two preset waveform templates are provided corresponding to two kinds of cable impedance. The selection is made by the PULS[3:0] bits. In internal impedance matching mode, if the cable impedance is 75 Ω, the PULS[3:0] bits should be set to '0000'; if the cable impedance is 120 Ω, the PULS[3:0] bits should be set to '0001'. In external impedance matching mode, for both 75 Ω and 120 Ω cable impedance, the PULS[3:0] bits should be set to '0001'.

3.24.2 LINE BUILD OUT (LBO) (T1 ONLY)

In long haul applications, the output on the TTIPn/TRINGn pins should be attenuated before transmission to prevent the cross-talk in the far end. Three LBOs are used to implement the pulse attenuation. Four grades of attenuation with each step of 7.5 dB are specified in the FCC Part 68 Regulations. The attenuation grade is selected by the PULS[3:0] bits. The details are listed in Table 61.

Table 61: LBO PULS[3:0] Setting In T1 Mode

Cable Configuration	PULS[3:0]
0 dB LBO	0 0 1 0
-7.5 dB LBO	1 0 0 1
-15.0 dB LBO	1 0 1 0
-22.5 dB LBO	1 0 1 1

3.24.3 USER-PROGRAMMABLE ARBITRARY WAVEFORM

User-programmable arbitrary waveform can be used in both short haul applications and long haul applications if the PULS[3:0] bits are set to '11XX' in the corresponding link. This allows the transmitter performance to be tuned for a wide variety of line condition or special application.

Each pulse shape can extend up to 4 UIs (Unit Interval) addressed by the UI[1:0] bits, and each UI is divided into 16 sub-phases addressed by the SAMP[3:0] bits. The pulse amplitude of each phase is represented by a binary byte, within the range from +63 to -63, stored in the WDAT[6:0] bits in signed magnitude form. The maximum number +63 (D) represents the positive maximum amplitude of the transmit pulse while the most negative number -63 (D) represents the maximum negative amplitude of the transmit pulse. Thus, up to 64 bytes are used. For each channel, a 64 bytes RAM is available.

There are twelve standard templates which are stored in a local ROM. One of them can be selected as reference and made some changes to get the desired waveform.

To do this, the first step is to choose a set of waveform value, which is the most similar to the desired pulse shape, from the following 12 tables (Table 62 to Table 73), and set the SCAL[5:0] bits to the corresponding standard value. Table 62 to Table 73 list the sample data and the standard scaling value of each of the 12 templates.

Modifying the corresponding sample data can get the desired transmit pulse shape. By increasing or decreasing by '1' from the standard value in the SCAL[5:0] bits, the pulse amplitude can be scaled up or down at the percentage ratio against the standard pulse amplitude if necessary. For different pulse shapes, the value of the SCAL[5:0] bits and the scaling percentage ratio are different. The values are listed in Table 62 to Table 73.

Do the followings step by step, the desired waveform can be programmed based on the selected waveform template:

1. Select the UI by the UI[1:0] bits;
2. Specify the sample address in the selected UI by the SAMP[3:0] bits;
3. Write sample data to the WDAT[6:0] bits. It contains the data to be stored in the RAM, addressed by the selected UI and the corresponding sample address;
4. Set the RW bit to '0' to write data to RAM, or to '1' to read data from RAM;
5. Set the DONE bit to implement the read or write operation;

(Repeat the above steps until all the sample data are written to or read from the internal RAM).

6. Write the scaling data to the SCAL[5:0] bits to scale the amplitude of the waveform based on the selected standard pulse amplitude.

Table 62 to Table 73 give all the sample data based on preset pulse templates and LBOs in details for reference. For preset pulse templates and LBOs, scaling up/down against the pulse amplitude is not supported.

1. Table 62 - Transmit Waveform Value For E1 75 Ω
2. Table 63 - Transmit Waveform Value For E1 120 Ω
3. Table 64 - Transmit Waveform Value For T1 0~133 ft
4. Table 65 - Transmit Waveform Value For T1 133~266 ft
5. Table 66 - Transmit Waveform Value For T1 266~399 ft
6. Table 67 - Transmit Waveform Value For T1 399~533 ft
7. Table 68 - Transmit Waveform Value For T1 533~655 ft
8. Table 69 - Transmit Waveform Value For J1 0~655 ft
9. Table 70 - Transmit Waveform Value For DS1 0 dB LBO
10. Table 71 - Transmit Waveform Value For DS1 -7.5 dB LBO
11. Table 72 - Transmit Waveform Value For DS1 -15.0 dB LBO
12. Table 73 - Transmit Waveform Value For DS1 -22.5 dB LBO

Table 62: Transmit Waveform Value For E1 75 Ω

	UI 1	UI 2	UI 3	UI 4
Sample 1	0000000	0000000	0000000	0000000
Sample 2	0000000	0000000	0000000	0000000
Sample 3	0000000	0000000	0000000	0000000
Sample 4	0001100	0000000	0000000	0000000
Sample 5	0110000	0000000	0000000	0000000
Sample 6	0110000	0000000	0000000	0000000
Sample 7	0110000	0000000	0000000	0000000
Sample 8	0110000	0000000	0000000	0000000
Sample 9	0110000	0000000	0000000	0000000
Sample 10	0110000	0000000	0000000	0000000
Sample 11	0110000	0000000	0000000	0000000
Sample 12	0110000	0000000	0000000	0000000
Sample 13	0000000	0000000	0000000	0000000
Sample 14	0000000	0000000	0000000	0000000
Sample 15	0000000	0000000	0000000	0000000
Sample 16	0000000	0000000	0000000	0000000
The standard value of the SCAL[5:0] bits is '100001'. One step change of this value results in 3% scaling up/down against the pulse amplitude.				

Table 63: Transmit Waveform Value For E1 120 Ω

	UI 1	UI 2	UI 3	UI 4
Sample 1	0000000	0000000	0000000	0000000
Sample 2	0000000	0000000	0000000	0000000
Sample 3	0000000	0000000	0000000	0000000
Sample 4	0001111	0000000	0000000	0000000
Sample 5	0111100	0000000	0000000	0000000
Sample 6	0111100	0000000	0000000	0000000
Sample 7	0111100	0000000	0000000	0000000
Sample 8	0111100	0000000	0000000	0000000
Sample 9	0111100	0000000	0000000	0000000
Sample 10	0111100	0000000	0000000	0000000
Sample 11	0111100	0000000	0000000	0000000
Sample 12	0111100	0000000	0000000	0000000
Sample 13	0000000	0000000	0000000	0000000
Sample 14	0000000	0000000	0000000	0000000
Sample 15	0000000	0000000	0000000	0000000
Sample 16	0000000	0000000	0000000	0000000
The standard value of the SCAL[5:0] bits is '100001'. One step change of this value results in 3% scaling up/down against the pulse amplitude.				

Table 64: Transmit Waveform Value For T1 0~133 ft

	UI 1	UI 2	UI 3	UI 4
Sample 1	0010111	1000010	0000000	0000000
Sample 2	0100111	1000001	0000000	0000000
Sample 3	0100111	0000000	0000000	0000000
Sample 4	0100110	0000000	0000000	0000000
Sample 5	0100101	0000000	0000000	0000000
Sample 6	0100101	0000000	0000000	0000000
Sample 7	0100101	0000000	0000000	0000000
Sample 8	0100100	0000000	0000000	0000000
Sample 9	0100011	0000000	0000000	0000000
Sample 10	1001010	0000000	0000000	0000000
Sample 11	1001010	0000000	0000000	0000000
Sample 12	1001001	0000000	0000000	0000000
Sample 13	1000111	0000000	0000000	0000000
Sample 14	1000101	0000000	0000000	0000000
Sample 15	1000100	0000000	0000000	0000000
Sample 16	1000011	0000000	0000000	0000000

The standard value of the SCAL[5:0] bits is '110110'. One step change of this value results in 2% scaling up/down against the pulse amplitude.

Table 65: Transmit Waveform Value For T1 133~266 ft

	UI 1	UI 2	UI 3	UI 4
Sample 1	0011011	1000011	0000000	0000000
Sample 2	0101100	1000010	0000000	0000000
Sample 3	0101011	1000001	0000000	0000000
Sample 4	0101010	0000000	0000000	0000000
Sample 5	0101000	0000000	0000000	0000000
Sample 6	0101000	0000000	0000000	0000000
Sample 7	0100111	0000000	0000000	0000000
Sample 8	0100110	0000000	0000000	0000000
Sample 9	0100101	0000000	0000000	0000000
Sample 10	1010000	0000000	0000000	0000000
Sample 11	1001111	0000000	0000000	0000000
Sample 12	1001101	0000000	0000000	0000000
Sample 13	1001010	0000000	0000000	0000000
Sample 14	1001000	0000000	0000000	0000000
Sample 15	1000110	0000000	0000000	0000000
Sample 16	1000100	0000000	0000000	0000000

The standard value of the SCAL[5:0] bits is '110110'. One step change of this value results in 2% scaling up/down against the pulse amplitude.

Table 66: Transmit Waveform Value For T1 266~399 ft

	UI 1	UI 2	UI 3	UI 4
Sample 1	0011111	1000011	0000000	0000000
Sample 2	0110001	1000010	0000000	0000000
Sample 3	0101111	1000001	0000000	0000000
Sample 4	0101100	0000000	0000000	0000000
Sample 5	0101011	0000000	0000000	0000000
Sample 6	0101010	0000000	0000000	0000000
Sample 7	0101001	0000000	0000000	0000000
Sample 8	0101000	0000000	0000000	0000000
Sample 9	0100101	0000000	0000000	0000000
Sample 10	1010111	0000000	0000000	0000000
Sample 11	1010011	0000000	0000000	0000000
Sample 12	1010000	0000000	0000000	0000000
Sample 13	1001011	0000000	0000000	0000000
Sample 14	1001000	0000000	0000000	0000000
Sample 15	1000110	0000000	0000000	0000000
Sample 16	1000100	0000000	0000000	0000000

The standard value of the SCAL[5:0] bits is '110110'. One step change of this value results in 2% scaling up/down against the pulse amplitude.

Table 67: Transmit Waveform Value For T1 399~533 ft

	UI 1	UI 2	UI 3	UI 4
Sample 1	0100000	1000011	0000000	0000000
Sample 2	0111000	1000010	0000000	0000000
Sample 3	0110011	1000001	0000000	0000000
Sample 4	0101111	0000000	0000000	0000000
Sample 5	0101110	0000000	0000000	0000000
Sample 6	0101101	0000000	0000000	0000000
Sample 7	0101100	0000000	0000000	0000000
Sample 8	0101010	0000000	0000000	0000000
Sample 9	0101000	0000000	0000000	0000000
Sample 10	1011000	0000000	0000000	0000000
Sample 11	1011000	0000000	0000000	0000000
Sample 12	1010011	0000000	0000000	0000000
Sample 13	1001100	0000000	0000000	0000000
Sample 14	1001000	0000000	0000000	0000000
Sample 15	1000110	0000000	0000000	0000000
Sample 16	1000100	0000000	0000000	0000000

The standard value of the SCAL[5:0] bits is '110110'. One step change of this value results in 2% scaling up/down against the pulse amplitude.

Table 68: Transmit Waveform Value For T1 533~655 ft

	UI 1	UI 2	UI 3	UI 4
Sample 1	0100000	1000011	0000000	0000000
Sample 2	0111111	1000010	0000000	0000000
Sample 3	0111000	1000001	0000000	0000000
Sample 4	0110011	0000000	0000000	0000000
Sample 5	0101111	0000000	0000000	0000000
Sample 6	0101110	0000000	0000000	0000000
Sample 7	0101101	0000000	0000000	0000000
Sample 8	0101100	0000000	0000000	0000000
Sample 9	0101001	0000000	0000000	0000000
Sample 10	1011111	0000000	0000000	0000000
Sample 11	1011110	0000000	0000000	0000000
Sample 12	1010111	0000000	0000000	0000000
Sample 13	1001111	0000000	0000000	0000000
Sample 14	1001001	0000000	0000000	0000000
Sample 15	1000111	0000000	0000000	0000000
Sample 16	1000100	0000000	0000000	0000000

The standard value of the SCAL[5:0] bits is '110110'. One step change of this value results in 2% scaling up/down against the pulse amplitude.

Table 69: Transmit Waveform Value For J1 0~655ft

	UI 1	UI 2	UI 3	UI 4
Sample 1	0010111	1000010	0000000	0000000
Sample 2	0100111	1000001	0000000	0000000
Sample 3	0100111	0000000	0000000	0000000
Sample 4	0100110	0000000	0000000	0000000
Sample 5	0100101	0000000	0000000	0000000
Sample 6	0100101	0000000	0000000	0000000
Sample 7	0100101	0000000	0000000	0000000
Sample 8	0100100	0000000	0000000	0000000
Sample 9	0100011	0000000	0000000	0000000
Sample 10	1001010	0000000	0000000	0000000
Sample 11	1001010	0000000	0000000	0000000
Sample 12	1001001	0000000	0000000	0000000
Sample 13	1000111	0000000	0000000	0000000
Sample 14	1000101	0000000	0000000	0000000
Sample 15	1000100	0000000	0000000	0000000
Sample 16	1000011	0000000	0000000	0000000

The standard value of the SCAL[5:0] bits is '110110'. One step change of this value results in 2% scaling up/down against the pulse amplitude.

Table 70: Transmit Waveform Value For DS1 0 dB LBO

	UI 1	UI 2	UI 3	UI 4
Sample 1	0010111	1000010	0000000	0000000
Sample 2	0100111	1000001	0000000	0000000
Sample 3	0100111	0000000	0000000	0000000
Sample 4	0100110	0000000	0000000	0000000
Sample 5	0100101	0000000	0000000	0000000
Sample 6	0100101	0000000	0000000	0000000
Sample 7	0100101	0000000	0000000	0000000
Sample 8	0100100	0000000	0000000	0000000
Sample 9	0100011	0000000	0000000	0000000
Sample 10	1001010	0000000	0000000	0000000
Sample 11	1001010	0000000	0000000	0000000
Sample 12	1001001	0000000	0000000	0000000
Sample 13	1000111	0000000	0000000	0000000
Sample 14	1000101	0000000	0000000	0000000
Sample 15	1000100	0000000	0000000	0000000
Sample 16	1000011	0000000	0000000	0000000

The standard value of the SCAL[5:0] bits is '110110'. One step change of this value results in 2% scaling up/down against the pulse amplitude.

Table 71: Transmit Waveform Value For DS1 -7.5 dB LBO

	UI 1	UI 2	UI 3	UI 4
Sample 1	0000000	0010100	0000010	0000000
Sample 2	0000010	0010010	0000010	0000000
Sample 3	0001001	0010000	0000010	0000000
Sample 4	0010011	0001110	0000010	0000000
Sample 5	0011101	0001100	0000010	0000000
Sample 6	0100101	0001011	0000001	0000000
Sample 7	0101011	0001010	0000001	0000000
Sample 8	0110001	0001001	0000001	0000000
Sample 9	0110110	0001000	0000001	0000000
Sample 10	0111010	0000111	0000001	0000000
Sample 11	0111001	0000110	0000001	0000000
Sample 12	0110000	0000101	0000001	0000000
Sample 13	0101000	0000100	0000000	0000000
Sample 14	0100000	0000100	0000000	0000000
Sample 15	0011010	0000011	0000000	0000000
Sample 16	0010111	0000011	0000000	0000000

The standard value of the SCAL[5:0] bits is '010001'. One step change of this value results in 6.25% scaling up/down against the pulse amplitude.

Table 72: Transmit Waveform Value For DS1 -15.0 dB LBO

	UI 1	UI 2	UI 3	UI 4
Sample 1	0000000	0110101	0001111	0000011
Sample 2	0000000	0110011	0001101	0000010
Sample 3	0000000	0110000	0001100	0000010
Sample 4	0000001	0101101	0001011	0000010
Sample 5	0000100	0101010	0001010	0000010
Sample 6	0001000	0100111	0001001	0000001
Sample 7	0001110	0100100	0001000	0000001
Sample 8	0010100	0100001	0000111	0000001
Sample 9	0011011	0011110	0000110	0000001
Sample 10	0100010	0011100	0000110	0000001
Sample 11	0101010	0011010	0000101	0000001
Sample 12	0110000	0010111	0000101	0000001
Sample 13	0110101	0010101	0000100	0000001
Sample 14	0110111	0010100	0000100	0000000
Sample 15	0111000	0010010	0000011	0000000
Sample 16	0110111	0010000	0000011	0000000

The standard value of the SCAL[5:0] bits is '001000'. One step change of the value results in 12.5% scaling up/down against the pulse amplitude.

Table 73: Transmit Waveform Value For DS1 -22.5 dB LBO

	UI 1	UI 2	UI 3	UI 4
Sample 1	0000000	0101100	0011110	0001000
Sample 2	0000000	0101110	0011100	0000111
Sample 3	0000000	0110000	0011010	0000110
Sample 4	0000000	0110001	0011000	0000101
Sample 5	0000001	0110010	0010111	0000101
Sample 6	0000011	0110010	0010101	0000100
Sample 7	0000111	0110010	0010100	0000100
Sample 8	0001011	0110001	0010011	0000011
Sample 9	0001111	0110000	0010001	0000011
Sample 10	0010101	0101110	0010000	0000010
Sample 11	0011001	0101100	0001111	0000010
Sample 12	0011100	0101001	0001110	0000010
Sample 13	0100000	0100111	0001101	0000001
Sample 14	0100011	0100100	0001100	0000001
Sample 15	0100111	0100010	0001010	0000001
Sample 16	0101010	0100000	0001001	0000001

The standard value of the SCAL[5:0] bits is '000100'. One step change of this value results in 25% scaling up/down against the pulse amplitude.

When more than one UI are used to compose the pulse template and the pulse amplitude is not set properly, the overlap of two consecutive pulses will make the pulse amplitude overflow (exceed the maximum limitation). This overflow is captured by the DAC_IS bit, and if enabled by the DAC_IE bit, an interrupt will be reported by the $\overline{\text{INT}}$ pin.

Table 74: Related Bit / Register In Chapter 3.24

Bit	Register	Address (Hex)
PULS[3:0]	Transmit Configuration 1	023, 123, 223, 323
UI[1:0]	Transmit Configuration 3	025, 125, 225, 325
SAMP[3:0]		
RW		
DONE		
WDAT[6:0]	Transmit Configuration 4	026, 126, 226, 326
SCAL[5:0]	Transmit Configuration 2	024, 124, 224, 324
DAC_IS	Interrupt Status 1	03B, 13B, 23B, 33B
DAC_IE	Interrupt Enable Control 1	034, 134, 234, 334

3.25 LINE DRIVER

The Line Driver can be set to High-Z for redundant application.

The following ways will set the drivers to High-Z:

1. Setting the THZ pin to high will globally set all the Line Drivers to High-Z;

2. When there is no clock input on the OSCI pin, all the Line Drivers will be High-Z (no clock means this: the input on the OSCI pin is in high/low level, or the duty cycle is less than 30% or larger than 70%);

3. After software reset, hardware reset or power on, all the Line Drivers will be High-Z;

4. Setting the T_HZ bit to ‘1’ will set the corresponding Line Driver to High-Z;

5. In Transmit Clock Master mode, if the XTS bit is ‘1’, the source of the transmit clock is from the recovered clock from the line side. When the recovered clock from the line side is lost, the Line Driver in the corresponding link will be High-Z;

6. In Transmit Clock Slave mode, if the XTS bit is ‘0’, the source of the transmit clock is from the backplane timing clock. When the backplane timing clock is lost (i.e., no transition for more than 72 T1/E1/J1 cycles), the Line Driver in the corresponding link will be High-Z. However, there is an exception in this case. That is, if the link is in Remote Loopback mode, the Line Driver will not be High-Z.

7. When the transmit path is power down, the Line Driver in the corresponding link will be High-Z.

By these ways, the TTIPn and TRINGn pins will enter into high impedance state immediately.

Controlled by the DFM_ON bit, the output driver short-circuit protection can be enabled. The driver’s output current (peak to peak) is limited to 110 mA typically. When the output current exceeds the limitation, the transmit driver failure will be captured by the DF_S bit. Selected by the DF_IES bit, a transition from ‘0’ to ‘1’ on the DF_S bit or any transition from ‘0’ to ‘1’ or from ‘1’ to ‘0’ on the DF_S bit will set the DF_IS bit. When the DF_IS bit is ‘1’, an interrupt on the $\overline{\text{INT}}$ pin will be reported if enabled by the DF_IE bit.

3.26 TRANSMITTER IMPEDANCE MATCHING

In T1/J1 mode, the transmitter impedance matching can be realized by using internal impedance matching circuit. 100 Ω, 110 Ω, 75 Ω or 120 Ω internal impedance matching circuit can be selected by the T_TERM[1:0] bits. The external impedance circuitry is not supported in T1/J1 mode.

In E1 mode, the transmitter impedance matching can be realized by using internal impedance matching circuit or external impedance matching circuit. When the T_TERM[2] bit is '0', the internal impedance matching circuit is enabled. 100 Ω, 110 Ω, 75 Ω or 120 Ω internal impedance matching circuit can be selected by the T_TERM[1:0] bits. When the T_TERM[2] bit is '1', the internal impedance matching circuit is disabled, and different external resistors should be used to realize different impedance matching.

Figure 2 shows the appropriate components to connect with the cable for one link. Table 75 lists the recommended impedance matching values for the transmitter.

Table 75: Impedance Matching Value For The Transmitter

Cable Configuration	Internal Termination		External Termination	
	T_TERM[2:0]	R_T	T_TERM[2:0]	R_T
75 Ω (E1)	0 0 0	0 Ω	1 X X	9.4 Ω
120 Ω (E1)	0 0 1			
100 Ω (T1)	0 1 0		-	-
110 Ω (J1)	0 1 1		-	-

Table 76: Related Bit / Register In Chapter 3.25 & Chapter 3.26

Bit	Register	Address (Hex)
T_HZ	Transmit Configuration 1	023, 123, 223, 323
DFM_ON		
XTS	Transmit Timing Option	070, 170, 270, 370
DF_S	Line Status Register 0	036, 136, 236, 336
DF_IES	Interrupt Trigger Edges Select	035, 135, 235, 335
DF_IS	Interrupt Status 0	03A, 13A, 23A, 33A
DF_IE	Interrupt Enable Control 0	033, 133, 233, 333
T_TERM[2:0]	Transmit And Receive Termination Configuration	032, 132, 232, 332

3.27 TESTING AND DIAGNOSTIC FACILITIES

3.27.1 PRBS GENERATOR / DETECTOR

The PRBS Generator / Detector generates test pattern to either the transmit or receive direction, and detects the pattern in the opposite direction. The direction is determined by the PRBSDIR bit. The pattern can be generated or detected in unframed mode, in 8-bit-based mode or in 7-bit-based mode. This selection is made by the PRBSMODE[1:0] bits. In unframed mode, all the data streams are extracted or replaced and the per-channel/per-TS configuration in the TEST bit is ignored. In 8-bit-based mode or in 7-bit-based mode, the extracted or replaced channel/timeslot is specified by the TEST bit. (In 7-bit-based mode, only the higher 7 bits of the selected channel/timeslot are used for PRBS test).

3.27.1.1 Pattern Generator

Three patterns are generated: 2^{11}-1 pattern per O.150, 2^{15}-1 pattern per O.152 and 2^{20}-1 pattern per O.150-4.5. They are selected by the PATS[1:0] bits.

The selected pattern is generated once there is a transition from ‘0’ to ‘1’ on the TESTEN bit.

A single bit error will be inserted to the generated pattern when the INV bit is set to ‘1’. Before the insertion, the generated pattern can be inverted when the TINV bit is set.

3.27.1.2 Pattern Detector

When there is a transition from ‘0’ to ‘1’ on the TESTEN bit, the pattern detector starts to extract the data. The extracted data is used to re-generate a desired pattern which is selected by the PATS[1:0] bits. The extracted data is compared with the re-generated pattern. If the extracted data coincides with the pattern, the pattern is synchronized and it will be indicated by the SYNCV bit. In synchronization state, each mismatched bit will generate a PRGD Bit Error event. This event is captured by the BERI bit and is forwarded to the Performance Monitor. An interrupt reported on the $\overline{INT}$ pin will be enabled by the BERE bit if the BERI bit is ‘1’. When there are more than 10-bit errors detected in the fixed 48-bit window, the extracted data is out of synchronization and it also will be indicated by the SYNCV bit. Any transition (from ‘1’ to ‘0’ or from ‘0’ to ‘1’) on the SYNCV bit will set the SYNCI bit. An interrupt reported on the $\overline{INT}$ pin will be enabled by the SYNCE bit if the SYNCI bit is ‘1’.

Before the data extracted to the pattern detector, the data can be inverted by setting the RINV bit.

Table 77: Related Bit / Register In Chapter 3.27.1

Bit	Register	Address (Hex)
PRBSDIR	TPLC / RPLC / PRGD Test Configuration	0C7, 1C7, 2C7, 3C7
PRBSMODE[1:0]		
TESTEN		
TEST	ID * - Signaling Trunk Conditioning Code	RPLC & TPLC ID * - 41~58 (for T1/J1) / 41~4F & 51~5F (for E1)
PATS[1:0]	PRGD Control	071, 171, 271, 371
TINV		
RINV		
INV	PRGD Status/Error Control	072, 172, 272, 372
SYNCV		
BERE		
SYNCE		
BERI	PRGD Interrupt Indication	073, 173, 273, 373
SYNCI		

Note:
* ID means Indirect Register in the Receive & Transmit Payload Control function blocks.

3.27.2 LOOPBACK

System Loopback, Payload Loopback, Local Digital Loopback 1 & 2, Remote Loopback and Analog Loopback are all supported in the IDT82P2284. Their routes are shown in the Functional Block Diagram.

3.27.2.1 System Loopback

The System Loopback can only be implemented when the Receive System Interface and the Transmit System Interface are in different Non-multiplexed operating modes (one in Clock Master mode and the other in Clock Slave mode). However, in T1/J1 mode, when either the receive path or the transmit path is in T1/J1 mode E1 rate, the System Loopback is not supported.

Distinguished by the loopback direction, the System Loopback can be divided into System Remote Loopback and System Local Loopback. When the data and signaling bits from the transmit path are looped to the receive path, it is System Remote Loopback. When the data and signaling bits from the receive path are looped to the transmit path, it is System Local Loopback.

3.27.2.1.1 System Remote Loopback

Enabled by the SRLP bit, the System Remote Loopback is implemented. The data and signaling bits to be transmitted on the TSDn and TSIGn pins are internally looped to the RSDn and RSIGn pins. When the receive path is in Receive Clock Master mode and the transmit path is in Transmit Clock Slave mode, the clock signal and the framing pulse from the system side on the TSCKn and TSFSn pins are looped to the RSCKn and RSFSn pins respectively. When the transmit path is in Transmit Clock Master mode and the receive path is in Receive Clock Slave mode, the clock signal and the framing pulse from the system side on the RSCKn and RSFSn pins are looped to the TSCKn and TSFSn pins respectively.

In System Remote Loopback mode, the data stream to be transmitted is still output to the line side, while the data stream received from the line side is replaced by the System Remote Loopback data.

3.27.2.1.2 System Local Loopback

Enabled by the SLLP bit, the System Local Loopback is implemented. The received data and signaling bits to be output on the RSDn and RSIGn pins are internally looped to the TSDn and TSIGn pins. When the receive path is in Receive Clock Master mode and the transmit path is in Transmit Clock Slave mode, the recovered clock signal and framing pulse on the RSCKn and RSFSn pins are looped to the TSCKn and TSFSn pins respectively. When the transmit path is in Transmit Clock Master mode and the receive path is in Receive Clock Slave mode, the TSCKn and TSFSn pins are looped to the RSCKn and RSFSn pins respectively.

In System Local Loopback mode, the data stream received from the line side is still output to the system through the RSDn and RSIGn pins, while the data stream to be transmitted through the TSDn and TSIGn pins are replaced by the System Local Loopback data.

3.27.2.2 Payload Loopback

By programming the GSUBST[2:0] bits or the SUBST[2:0] bits, the Payload Loopback can be implemented. The received data output from the Elastic Store Buffer is internally looped to the Transmit Payload Control.

In Payload Loopback mode, the received data is still output to the system side, while the data to be transmitted from the system side is replaced by the Payload Loopback data.

3.27.2.3 Local Digital Loopback 1

Enabled by the DLLP bit, the Local Digital Loopback 1 is implemented. The data stream output from the Transmit Buffer is internally looped to the Frame Processor.

In Local Digital Loopback 1 mode, the data stream to be transmitted is still output to the line side, while the data stream received from the line side is replaced by the Local Digital Loopback 1 data.

3.27.2.4 Remote Loopback

Enabled by the RLP bit, the Remote Loopback is implemented. The data stream output from the optional Receive Jitter Attenuator is internally looped to the optional Transmit Jitter Attenuator.

In Remote Loopback mode, the data stream received from the line side is still output to the system, while the data stream to be transmitted is replaced by the Remote Loopback data.

3.27.2.5 Local Digital Loopback 2

Enabled by the DLP bit, the Local Digital Loopback 2 is implemented. The data stream output from the optional Transmit Jitter Attenuator is internally looped to the Optional Receive Jitter Attenuator.

In Local Digital Loopback 2 mode, the data stream to be transmitted is still output to the line side, while the data stream received from the line side is replaced by the Local Digital Loopback 2 data.

3.27.2.6 Analog Loopback

Enabled by the ALP bit, the Analog Loopback is implemented. The data stream to be transmitted on the TTIPn/TRINGn pins is internally looped to the RTIPn/RRINGn pins.

In Analog Loopback mode, the data stream to be transmitted is still output to the line side, while the data stream received from the line side is replaced by the Analog Loopback data.

3.27.3 G.772 NON-INTRUSIVE MONITORING

When the G.772 Non-Intrusive Monitoring is implemented, only three links are in normal operation and the Link 1 is configured to monitor the receive path or transmit path of any of the remaining links.

Whether the G.772 Non-Intrusive Monitoring is implemented and which direction (receive/transmit) and link is monitored are both determined by the MON[3:0] bits.

The G.772 Non-Intrusive Monitoring meets the ITU-T G.772. It is shown in Figure 35. The data stream of Link 1 is received from the selected path of any of the remaining links, then processed as normal. The operation of the monitored link is not effected.

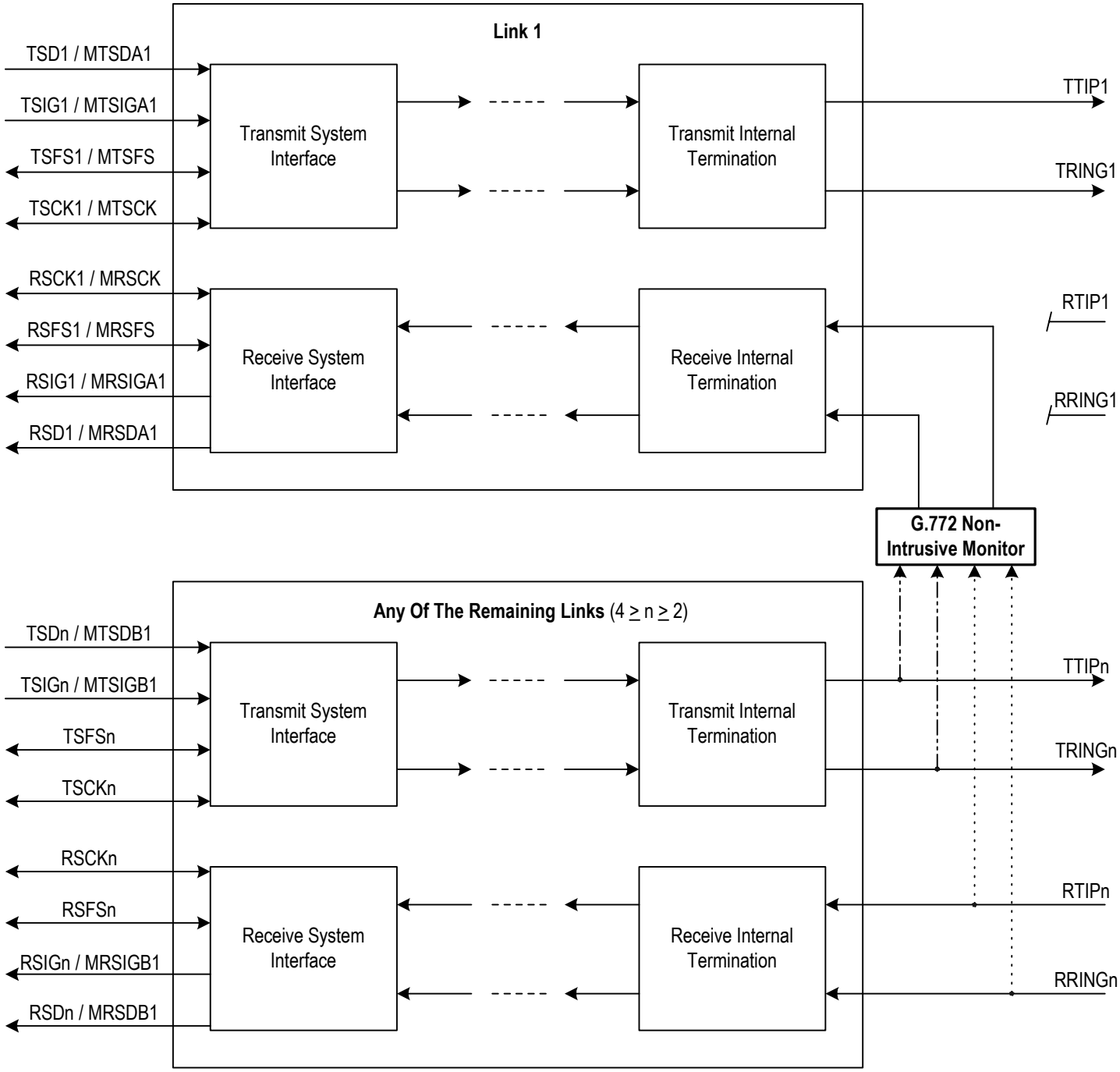

Figure 35. G.772 Non-Intrusive Monitor

Table 78: Related Bit / Register In Chapter 3.27.2 & Chapter 3.27.3

Bit	Register	Address (Hex)
SRLP	Maintenance Function Control 0	02B, 12B, 22B, 32B
SLLP		
DLLP		
RLP		
DLP		
ALP		
GSUBST[2:0]	TPLC Configuration	0CB, 1CB, 2CB, 3CB
SUBST[2:0]	ID * - Channel Control (for T1/J1) / Timeslot Control (for E1)	TPLC ID * - 01~18 (for T1/J1) / 00~1F (for E1)
MON[3:0]	G.772 Monitor Control	005

Note:
* ID means Indirect Register in the Transmit Payload Control function block.

3.28 INTERRUPT SUMMARY

When the $\overline{INT}$ pin is asserted low, it means at least one interrupt has occurred in the device. Reading the Timer Interrupt Indication register and Interrupt Requisition Link ID register will find whether the timer interrupt occurs or in which link the interrupt occurs.

If the TMOVI bit in the Timer Interrupt Indication register is '1' and the TMOVE bit in the Timer Interrupt Control register is enabled, the one second timer of the device generates an interrupt. Then the source is served after it is found.

After reading the Interrupt Requisition Link ID register, the Interrupt Module Indication registers of the interrupting link are read. The Interrupt Module Indication bits will be '1' if there are interrupts in the corresponding function block. To find the eventual interrupt sources, the Interrupt Indication and Status bits in the block are polled if their Interrupt Enable bits are enabled. Then the sources are served after they are found.

Table 79: Related Bit / Register In Chapter 3.28

Bit	Register	Address (Hex)
TMOVI	Timer Interrupt Indication	00B
INT[4:1]	Interrupt Requisition Link ID	009
TMOVE	Timer Interrupt Control	00A
LIU	Interrupt Module Indication 2	03F, 13F, 23F, 33F
IBCD (T1/J1 only)	Interrupt Module Indication 0	040, 140, 240, 340
RBOC (T1/J1 only)		
ALARM		
PMON		
PRGD		
RCRB		
FGEN		
FRMR		
THDLC3	Interrupt Module Indication 1	041, 141, 241, 341
THDLC2		
THDLC1		
RHDLC3		
RHDLC2		
RHDLC1		
ELST		
TRSI/RESI		

4 OPERATION

4.1 POWER-ON SEQUENCE

To power on the device, the following sequence should be followed:

1. Apply ground;
2. Apply 3.3 V;
3. Apply 1.8 V.

4.2 RESET

When the device is powered-up, all the registers contain random values.

The hardware reset pin $\overline{\text{RESET}}$ must be asserted low during the power-up and the low signal should last at least 10 ms to initialize the device. After the $\overline{\text{RESET}}$ pin is asserted high, all the registers are in their default values and can be accessed after 2 ms (refer to Figure 36).

During normal operation, the device can be reset by hardware or software anytime. When it is hardware reset, the $\overline{\text{RESET}}$ pin should be asserted low for at least 100 ns. Then all the registers are in their default values and can be accessed after 2 ms (refer to Figure 37). When it is software reset, a write signal to the Software Reset register will reset all the registers except the T1/J1 Or E1 Mode register to their default values. Then the registers are accessible after 2 ms. However, the T1/J1 Or E1 Mode register can not be reset by the software reset. It can only be reset by the hardware reset.

It should be mentioned that when the setting in the T1/J1 Or E1 Mode register is changed, a software reset must be applied.

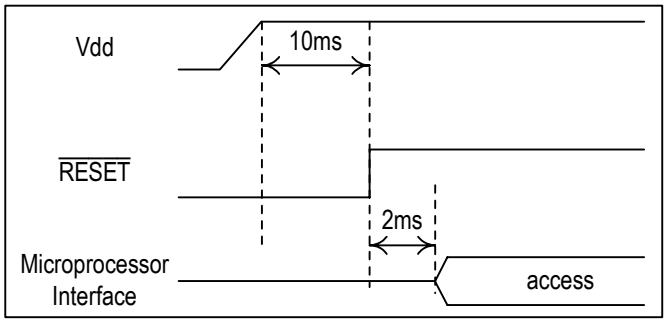

Figure 36. Hardware Reset When Powered-Up

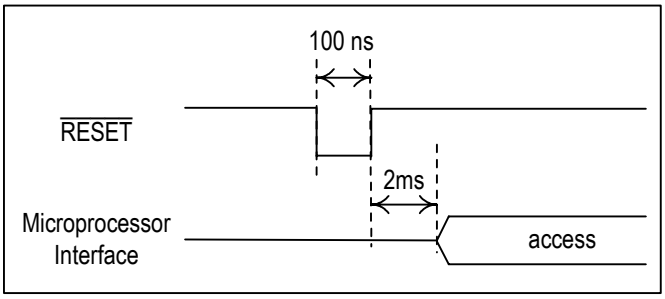

Figure 37. Hardware Reset In Normal Operation

4.3 RECEIVE / TRANSMIT PATH POWER DOWN

The receive path of any of the four links can be power down by setting the R_OFF bit. During the receive path power down, the output of the corresponding path is low.

The transmit path of any of the four links can be set to power down by the T_OFF bit. During the transmit path power down, the output of the corresponding path is High-Z.

4.4 MICROPROCESSOR INTERFACE

The microprocessor interface provides access to read and write the registers in the device. The interface consists of Serial Peripheral Interface (SPI) and parallel microprocessor interface.

4.4.1 SPI MODE

Pull the SPIEN pin to high, and the microprocessor interface will be set in SPI mode.

In this mode, only the $\overline{CS}$, SCLK, SDI and SDO pins are interfaced with the microprocessor. A falling transition on $\overline{CS}$ pin indicates the start of a read/write operation, and a rising transition indicates the end of the operation. After the $\overline{CS}$ pin is set to low, one instruction byte on the SDI pin is input to the device on the rising edge of the SCLK pin. If the MSB is '1', it is read operation. If the LSB is '0', it is write operation. Following the instruction byte, one address byte is clocked in on the SDI pin to specify the register. If the device is in read operation, the data read from the specified register is output on the SDO pin on the falling edge of the SCLK (refer to Figure 38). If the device is in write operation, the data written to the specified register is input on the SDI pin following the address byte (refer to Figure 39).

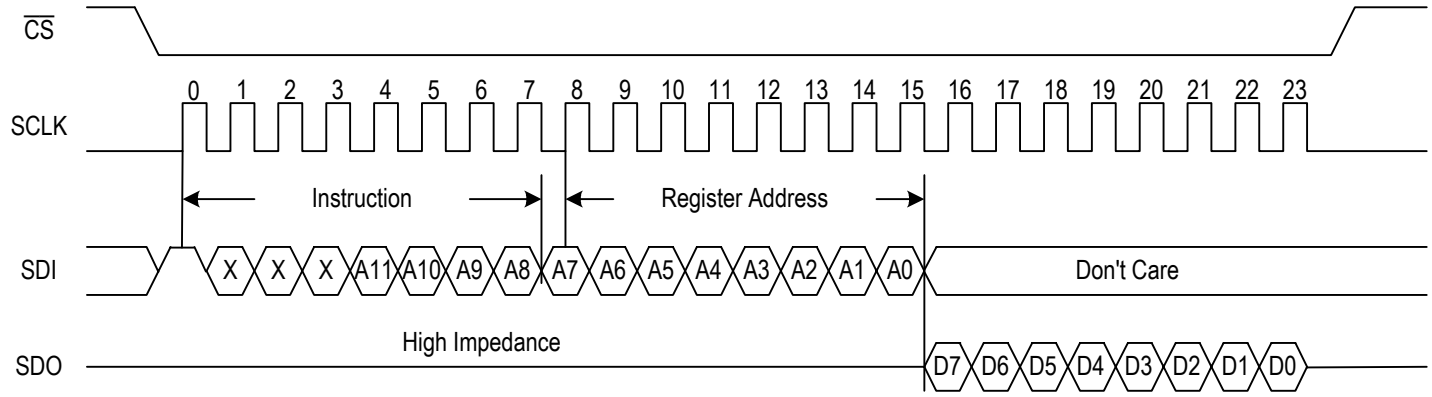

Figure 38. Read Operation In SPI Mode

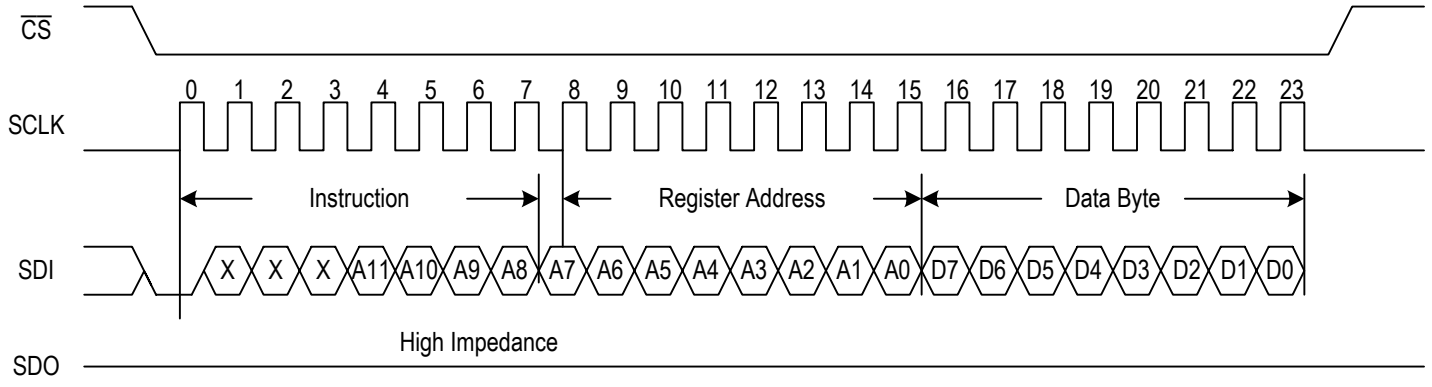

Figure 39. Write Operation In SPI Mode

4.4.2 PARALLEL MICROPROCESSOR INTERFACE

Pull the SPIEN pin to low, the microprocessor interface will be set in parallel mode. In this mode, the interface is compatible with the Motorola and the Intel microprocessor, which is selected by the MPM pin. The IDT82P2284 uses separate address bus and data bus. The mode selection and the interfaced pin are tabularized in Table 80.

Table 80: Parallel Microprocessor Interface

Pin MPM	Microprocessor Interface	Interfaced Pin
Low	Motorola	$\overline{CS}$, $\overline{DS}$, R$\overline{W}$, A[9:0], D[7:0]
High	Intel	$\overline{CS}$, $\overline{RD}$, $\overline{WR}$, A[9:0], D[7:0]

4.5 INDIRECT REGISTER ACCESS SCHEME

In Receive CAS/RBS Buffer, Receive Payload Control and Transmit Payload Control blocks, per-channel/per-timeslot indirect register is accessed by using an indirect register access scheme.

4.5.1 INDIRECT REGISTER READ ACCESS

The indirect register read access is as follows:

- Read the BUSY bit in the Access Status register to confirm the bit is ‘0’;
- Write the Access Control register to initiate the read operation and specify the indirect register address;
- Read the BUSY bit in the Access Status register again to confirm the bit is ‘0’;
- Read the indirect register data from the Access Data register.

An indirect register access request is completed within 4 μs.

4.5.2 INDIRECT REGISTER WRITE ACCESS

The indirect register write access is as follows:

- Read the BUSY bit in the Access Status register to confirm the bit is ‘0’;
- Write the Access Data register;
- Write the Access Control register to initiate the write operation and specify the indirect register address.

An indirect register access request is completed within 4 μs.

Table 81: Related Bit / Register In Chapter 4

Bit	Register	Address (Hex)
-	Software Reset	004
T1/J1	T1/J1 Or E1 Mode	020, 120, 220, 320
FM[1:0]		
TEMODE		
R_OFF	Receive Configuration 0	028, 128, 228, 328
T_OFF	Transmit Configuration 0	022, 122, 222, 322
BUSY	TPLC Access Status / RPLC Access Status / RCRB Access Status	0C8, 1C8, 2C8, 3C8 / 0CD, 1CD, 2CD, 3CD / 0D3, 1D3, 2D3, 3D3
RWN	TPLC Access Control / RPLC Access Control / RCRB Access Control	0C9, 1C9, 2C9, 3C9 / 0CE, 1CE, 2CE, 3CE / 0D4, 1D4, 2D4, 3D4
ADDRESS[6:0]		
D[7:0]	TPLC Access Data / RPLC Access Data / RCRB Access Data	0CA, 1CA, 2CA, 3CA / 0CF, 1CF, 2CF, 3CF / 0D5, 1D5, 2D5, 3D5

5 PROGRAMMING INFORMATION

5.1 REGISTER MAP

In the 'Reg' column, the 'X' represents 0 ~ 3, corresponding to the four links.

5.1.1 T1/J1 MODE

5.1.1.1 Direct Register

T1/J1 Reg (Hex)	Bit 7	Bit 6	Bit 5	Bit 4	Bit 3	Bit 2	Bit 1	Bit 0	Register Name	Reference Page
001	ID7	ID6	ID5	ID4	ID3	ID2	ID1	ID0	Chip ID For Quad Transceiver	P 114
002 ~ 003	-	-	-	-	-	-	-	-	Reserved	-
004	-	-	-	-	-	-	-	-	Software Reset	P 114
005	-	-	-	-	MON3	MON2	MON1	MON0	G.772 Monitor Control	P 115
006	-	-	-	-	LEVEL1	LEVEL0	DIR1	DIR0	GPIO Control	P 116
007	-	-	-	RO21	RO20	-	RO11	RO10	Reference Clock Output Select	P 117
008	-	-	-	-	-	-	-	-	Reserved	-
009	-	-	-	-	INT4	INT3	INT2	INT1	Interrupt Requisition Link ID	P 118
00A	-	-	-	-	-	-	-	TMOVE	Timer Interrupt Control	P 118
00B	-	-	-	-	-	-	-	TMOVI	Timer Interrupt Indication	P 118
00C ~ 00D	-	-	-	-	-	-	-	-	Reserved	-
00E	-	LINKSEL1	LINKSEL0	-	ADDR3	ADDR2	ADDR1	ADDR0	PMON Access Port	P 119
00F	DAT7	DAT6	DAT5	DAT4	DAT3	DAT2	DAT1	DAT0	PMON Access Data	P 119
010	-	-	-	RSLVCK	RMUX	MTSDA	TSLVCK	TMUX	Backplane Global Configuration	P 120
011 ~ 01F	-	-	-	-	-	-	-	-	Reserved	-
X20	-	-	-	-	T1/J1	FM1	FM0	TEMODE	T1/J1 Or E1 Mode	P 113
X21	-	-	TJITT_TEST	TJA_LIMT	TJA_E	TJA_DP1	TJA_DP0	TJA_BW	Transmit Jitter Attenuation Configuration	P 121
X22	-	-	-	T_OFF	-	-	-	T_MD	Transmit Configuration 0	P 122
X23	-	-	DFM_ON	T_HZ	PULS3	PULS2	PULS1	PULS0	Transmit Configuration 1	P 123
X24	-	-	SCAL5	SCAL4	SCAL3	SCAL2	SCAL1	SCAL0	Transmit Configuration 2	P 124
X25	DONE	RW	UI1	UI0	SAMP3	SAMP2	SAMP1	SAMP0	Transmit Configuration 3	P 125
X26	-	WDAT6	WDAT5	WDAT4	WDAT3	WDAT2	WDAT1	WDAT0	Transmit Configuration 4	P 126
X27	-	-	RJITT_TEST	RJA_LIMT	RJA_E	RJA_DP1	RJA_DP0	RJA_BW	Receive Jitter Attenuation Configuration	P 126
X28	-	-	-	R_OFF	-	-	-	R_MD	Receive Configuration 0	P 127
X29	-	EQ_ON	-	LOS4	LOS3	LOS2	LOS1	LOS0	Receive Configuration 1	P 128
X2A	-	-	SLICE1	SLICE0	UPDW1	UPDW0	MG1	MG0	Receive Configuration 2	P 129
X2B	-	DLLP	SLLP	SRLP	-	RLP	ALP	DLP	Maintenance Function Control 0	P 130
X2C	-	-	-	-	-	LAC	RAISE	ATAO	Maintenance Function Control 1	P 131
X2D ~ X30	-	-	-	-	-	-	-	-	Reserved	-
X31	-	BPV_INS	-	EXZ_DEF	EXZ_ERR1	EXZ_ERR0	CNT_MD	CNT_TRF	Maintenance Function Control 2	P 132
X32	-	-	T_TERM2	T_TERM1	T_TERM0	R_TERM2	R_TERM1	R_TERM0	Transmit And Receive Termination Configuration	P 133
X33	-	-	-	-	-	DF_IE	-	LOS_IE	Interrupt Enable Control 0	P 133

T1/J1 Reg (Hex)	Bit 7	Bit 6	Bit 5	Bit 4	Bit 3	Bit 2	Bit 1	Bit 0	Register Name	Reference Page
X34	-	DAC_IE	TJA_IE	RJA_IE	-	EXZ_IE	CV_IE	CNT_IE	Interrupt Enable Control 1	P 134
X35	-	-	-	-	-	DF_IES	-	LOS_IES	Interrupt Trigger Edges Select	P 135
X36	-	-	-	-	-	DF_S	-	LOS_S	Line Status Register 0	P 135
X37	-	-	-	LATT4	LATT3	LATT2	LATT1	LATT0	Line Status Register 1	P 136
X38	-	TJITT6	TJITT5	TJITT4	TJITT3	TJITT2	TJITT1	TJITT0	Transmit Jitter Measure Value Indication	P 137
X39	-	RJITT6	RJITT5	RJITT4	RJITT3	RJITT2	RJITT1	RJITT0	Receive Jitter Measure Value Indication	P 137
X3A	-	-	-	-	-	DF_IS	-	LOS_IS	Interrupt Status 0	P 138
X3B	-	DAC_IS	TJA_IS	RJA_IS	-	EXZ_IS	CV_IS	CNTOV_IS	Interrupt Status 1	P 139
X3C	CNTH[7]	CNTH[6]	CNTH[5]	CNTH[4]	CNTH[3]	CNTH[2]	CNTH[1]	CNTH[0]	EXZ Error Counter H-Byte	P 140
X3D	CNTL[7]	CNTL[6]	CNTL[5]	CNTL[4]	CNTL[3]	CNTL[2]	CNTL[1]	CNTL[0]	EXZ Error Counter L-Byte	P 140
X3E	-	-	-	-	-	-	-	REFH_LOS	Reference Clock Output Control *	P 140
X3F	-	-	-	-	-	-	-	LIU	Interrupt Module Indication 2	P 141
X40	IBCD	RBOC	ALARM	PMON	PRGD	RCRB	FGEN	FRMR	Interrupt Module Indication 0	P 142
X41	THDLC3	THDLC2	THDLC1	RHDLC3	RHDLC2	RHDLC1	ELST	TRSI/RESI	Interrupt Module Indication 1	P 143
X42	-	-	FBITGAP	DE	FE	CMS	FSINV	FSTYP	TBIF Option Register	P 144
X43	-	-	-	-	-	MAP1	MAP0	TMODE	TBIF Operating Mode	P 145
X44	-	TSOFF6	TSOFF5	TSOFF4	TSOFF3	TSOFF2	TSOFF1	TSOFF0	TBIF TS Offset	P 146
X45	-	-	-	-	EDGE	BOFF2	BOFF1	BOFF0	TBIF Bit Offset	P 146
X46	-	-	-	FBITGAP	DE	FE	CMS	TRI	RBIF Option Register	P 147
X47	-	-	-	-	-	MAP1	MAP0	RMODE	RBIF Mode	P 148
X48	-	-	-	FSINV	-	-	CMFS	ALTFIS	RBIF Frame Pulse	P 149
X49	-	TSOFF6	TSOFF5	TSOFF4	TSOFF3	TSOFF2	TSOFF1	TSOFF0	RBIF TS Offset	P 150
X4A	-	-	-	-	EDGE	BOFF2	BOFF1	BOFF0	RBIF Bit Offset	P 150
X4B	-	-	-	-	-	-	RCOFAI	TCOFAI	RTSFS Change Indication	P 151
X4C	-	-	-	-	-	-	RCOFAE	TCOFAE	RTSFS Interrupt Control	P 151
X4D	-	-	-	-	UNFM	REFCRCE	REFEN	REFR	FRMR Mode 0	P 152
X4E	-	-	-	-	DDSC	MIMICC	M2O1	M2O0	FRMR Mode 1	P 153
X4F	-	-	-	-	-	-	-	OOFV	FRMR Status	P 154
X50	-	-	-	-	-	-	-	OOFE	FRMR Interrupt Control 0	P 154
X51	-	-	-	RMFBE	SFEE	BEEE	FERE	COFAE	FRMR Interrupt Control 1	P 155
X52	-	-	EXCRCERI	MIMICI	-	-	-	OOFI	FRMR Interrupt Indication 0	P 156
X53	-	-	-	RMFBI	SFEI	BEEI	FERI	COFAI	FRMR Interrupt Indication 1	P 157
X54 ~ X55	-	-	-	-	-	-	-	-	Reserved	-
X56	C8	C7	C6	C5	C4	C3	C2	C1	RDL0	P 158
X57	-	-	M3	M2	M1	C11	C10	C9	RDL1	P 158
X58	-	-	S4	S3	S2	S1	A2	A1	RDL2	P 159
X59 ~ X5B	-	-	-	-	-	-	-	-	Reserved	-
X5C				SCDEB	SCAE	SCSE	SCME	SCCE	DLB Interrupt Control	P 160
X5D	-	-	-	-	SCAI	SCSI	SCMI	SCCI	DLB Interrupt Indication	P 161
X5E ~ X61	-	-	-	-	-	-	-	-	Reserved	-
X62	-	-	-	-	-	FDLBYP	CRCBYP	FDIS	T1/J1 Mode	P 162
X63 ~ X64	-	-	-	-	-	-	-	-	Reserved	-
X65	C8	C7	C6	C5	C4	C3	C2	C1	XDL0	P 163
X66	-	-	M3	M2	M1	C11	C10	C9	XDL1	P 163
X67	-	-	S4	S3	S2	S1	A2	A1	XDL2	P 164

T1/J1 Reg (Hex)	Bit 7	Bit 6	Bit 5	Bit 4	Bit 3	Bit 2	Bit 1	Bit 0	Register Name	Reference Page
X68 ~ X6A	-	-	-	-	-	-	-	-	Reserved	-
X6B	-	-	-	-	-	-	AUTOYEL-LOW	XYEL	FGEN Maintenance 0	P 164
X6C	-	-	-	-	MIMICEN	COFAEN	TXDIS	TAIS	FGEN Maintenance 1	P 165
X6D	-	-	-	-	-	-	MFE	BFE	FGEN Interrupt Control	P 166
X6E	-	-	-	-	-	-	MFI	BFI	FGEN Interrupt Indication	P 166
X6F	-	-	-	-	DDSINV	CRCINV	FsINV	FtINV	Error Insertion	P 167
X70	-	-	-	-	-	-	-	XTS	Transmit Timing Option	P 168
X71	-	-	-	-	RINV	TINV	PATS1	PATS0	PRGD Control	P 168
X72	-	-	-	-	BERE	INV	SYNCV	SYNCE	PRGD Status/Error Control	P 169
X73	-	-	-	-	BERI	-	-	SYNCI	PRGD Interrupt Indication	P 169
X74	-	-	-	-	IBCDEN	IBCDUNFM	CL1	CL0	XIBC Control	P 170
X75	IBC7	IBC6	IBC5	IBC4	IBC3	IBC2	IBC1	IBC0	XIBC Code	P 170
X76	-	-	-	IBCDIDLE	DSEL1	DSEL0	ASEL1	ASEL0	IBCD Detector Configuration	P 171
X77	-	-	-	-	-	-	LBA	LBD	IBCD Detector Status	P 172
X78	ACT7	ACT6	ACT5	ACT4	ACT3	ACT2	ACT1	ACT0	IBCD Activate Code	P 172
X79	DACT7	DACT6	DACT5	DACT4	DACT3	DACT2	DACT1	DACT0	IBCD Deactivate Code	P 172
X7A	-	-	-	-	-	-	LBAE	LBDE	IBCD Interrupt Control	P 173
X7B	-	-	-	-	-	-	LBAI	LBDI	IBCD Interrupt Indication	P 173
X7C	-	-	-	-	-	TRKEN	SLIPD	SLIPE	ELST Configuration	P 174
X7D	-	-	-	-	-	-	-	SLIPI	ELST Interrupt Indication	P 174
X7E	TRKCODE 7	TRKCODE 6	TRKCODE 5	TRKCODE 4	TRKCODE 3	TRKCODE2	TRKCODE 1	TRKCODE 0	ELST Trunk Code	P 174
X7F	-	-	LBBIT	U2BIT	U1BIT	RBIT	CRBIT	AUTOPRM	APRM Control	P 175
X80	-	-	XBOC5	XBOC4	XBOC3	XBOC2	XBOC1	XBOC0	XBOC Code	P 176
X81	-	-	-	-	-	-	AVC	BOCE	BOC Control	P 176
X82	-	-	-	-	-	-	-	BOCI	BOC Interrupt Indication	P 177
X83	-	-	BOC5	BOC4	BOC3	BOC2	BOC1	BOC0	RBOC Code	P 177
X84	-	-	-	-	-	TDLEN3	TDLEN2	TDLEN1	THDLC Enable Control	P 178
X85	-	-	-	-	-	-	-	-	Reserved	-
X86	-	EVEN	ODD	TS4	TS3	TS2	TS1	TS0	THDLC2 Assignment	P 179
X87	-	EVEN	ODD	TS4	TS3	TS2	TS1	TS0	THDLC3 Assignment	P 179
X88	-	-	-	-	-	-	-	-	Reserved	-
X89	BITEN7	BITEN6	BITEN5	BITEN4	BITEN3	BITEN2	BITEN1	BITEN0	THDLC2 Bit Select	P 180
X8A	BITEN7	BITEN6	BITEN5	BITEN4	BITEN3	BITEN2	BITEN1	BITEN0	THDLC3 Bit Select	P 180
X8B	-	-	-	-	-	RDLEN3	RDLEN2	RDLEN1	RHDLC Enable Control	P 181
X8C	-	-	-	-	-	-	-	-	Reserved	-
X8D	-	EVEN	ODD	TS4	TS3	TS2	TS1	TS0	RHDLC2 Assignment	P 182
X8E	-	EVEN	ODD	TS4	TS3	TS2	TS1	TS0	RHDLC3 Assignment	P 182
X8F	-	-	-	-	-	-	-	-	Reserved	-
X90	BITEN7	BITEN6	BITEN5	BITEN4	BITEN3	BITEN2	BITEN1	BITEN0	RHDLC2 Bit Select	P 183
X91	BITEN7	BITEN6	BITEN5	BITEN4	BITEN3	BITEN2	BITEN1	BITEN0	RHDLC3 Bit Select	P 183
X92	-	-	LSSUFIL	FISUFIL	ADRM1	ADRM0	RHDLCM	RRST	RHDLC1 Control Register	P 184
X93	-	-	LSSUFIL	FISUFIL	ADRM1	ADRM0	RHDLCM	RRST	RHDLC2 Control Register	P 184
X94	-	-	LSSUFIL	FISUFIL	ADRM1	ADRM0	RHDLCM	RRST	RHDLC3 Control Register	P 184
X95	-	-	-	-	-	-	EMP	PACK	RHDLC1 RFIFO Access Status	P 185
X96	-	-	-	-	-	-	EMP	PACK	RHDLC2 RFIFO Access Status	P 185
X97	-	-	-	-	-	-	EMP	PACK	RHDLC3 RFIFO Access Status	P 185

T1/J1 Reg (Hex)	Bit 7	Bit 6	Bit 5	Bit 4	Bit 3	Bit 2	Bit 1	Bit 0	Register Name	Reference Page
X98	DAT7	DAT6	DAT5	DAT4	DAT3	DAT2	DAT1	DAT0	RHDLC1 Data	P 186
X99	DAT7	DAT6	DAT5	DAT4	DAT3	DAT2	DAT1	DAT0	RHDLC2 Data	P 186
X9A	DAT7	DAT6	DAT5	DAT4	DAT3	DAT2	DAT1	DAT0	RHDLC3 Data	P 186
X9B	-	-	-	-	-	-	OVFLE	RMBEE	RHDLC1 Interrupt Control	P 187
X9C	-	-	-	-	-	-	OVFLE	RMBEE	RHDLC2 Interrupt Control	P 187
X9D	-	-	-	-	-	-	OVFLE	RMBEE	RHDLC3 Interrupt Control	P 187
X9E	-	-	-	-	-	-	OVFLI	RMBEI	RHDLC1 Interrupt Indication	P 188
X9F	-	-	-	-	-	-	OVFLI	RMBEI	RHDLC2 Interrupt Indication	P 188
XA0	-	-	-	-	-	-	OVFLI	RMBEI	RHDLC3 Interrupt Indication	P 188
XA1	HA7	HA6	HA5	HA4	HA3	HA2	HA1	HA0	RHDLC1 High Address	P 189
XA2	HA7	HA6	HA5	HA4	HA3	HA2	HA1	HA0	RHDLC2 High Address	P 189
XA3	HA7	HA6	HA5	HA4	HA3	HA2	HA1	HA0	RHDLC3 High Address	P 189
XA4	LA7	LA6	LA5	LA4	LA3	LA2	LA1	LA0	RHDLC1 Low Address	P 190
XA5	LA7	LA6	LA5	LA4	LA3	LA2	LA1	LA0	RHDLC2 Low Address	P 190
XA6	LA7	LA6	LA5	LA4	LA3	LA2	LA1	LA0	RHDLC3 Low Address	P 190
XA7	-	-	AUTOFISU	EOM	XREP	ABORT	THDLCM	TRST	THDLC1 Control	P 191
XA8	-	-	AUTOFISU	EOM	XREP	ABORT	THDLCM	TRST	THDLC2 Control	P 191
XA9	-	-	AUTOFISU	EOM	XREP	ABORT	THDLCM	TRST	THDLC3 Control	P 191
XAA	-	-	FL1	FL0	LL1	LL0	HL1	HL0	TFIFO1 Threshold	P 193
XAB	-	-	FL1	FL0	LL1	LL0	HL1	HL0	TFIFO2 Threshold	P 193
XAC	-	-	FL1	FL0	LL1	LL0	HL1	HL0	TFIFO3 Threshold	P 193
XAD	DAT7	DAT6	DAT5	DAT4	DAT3	DAT2	DAT1	DAT0	THDLC1 Data	P 194
XAE	DAT7	DAT6	DAT5	DAT4	DAT3	DAT2	DAT1	DAT0	THDLC2 Data	P 194
XAF	DAT7	DAT6	DAT5	DAT4	DAT3	DAT2	DAT1	DAT0	THDLC3 Data	P 194
XB0	-	-	-	-	-	FUL	EMP	RDY	TFIFO1 Status	P 195
XB1	-	-	-	-	-	FUL	EMP	RDY	TFIFO2 Status	P 195
XB2	-	-	-	-	-	FUL	EMP	RDY	TFIFO3 Status	P 195
XB3	-	-	-	-	-	-	UDRUNE	RDYE	THDLC1 Interrupt Control	P 196
XB4	-	-	-	-	-	-	UDRUNE	RDYE	THDLC2 Interrupt Control	P 196
XB5	-	-	-	-	-	-	UDRUNE	RDYE	THDLC3 Interrupt Control	P 196
XB6	-	-	-	-	-	-	UDRUNI	RDYI	THDLC1 Interrupt Indication	P 197
XB7	-	-	-	-	-	-	UDRUNI	RDYI	THDLC2 Interrupt Indication	P 197
XB8	-	-	-	-	-	-	UDRUNI	RDYI	THDLC3 Interrupt Indication	P 197
XB9	-	-	-	-	-	AIS	YEL	RED	Alarm Status	P 198
XBA	-	-	-	-	-	AISE	YELE	REDE	Alarm Control	P 199
XBB	-	-	-	-	-	AISI	YELI	REDI	Alarm Indication	P 199
XBC	REDDTH7	REDDTH6	REDDTH5	REDDTH4	REDDTH3	REDDTH2	REDDTH1	REDDTH0	RED Declare Threshold	P 200
XBD	REDCTH7	REDCTH6	REDCTH5	REDCTH4	REDCTH3	REDCTH2	REDCTH1	REDCTH0	RED Clear Threshold	P 200
XBE	YELDTH7	YELDTH6	YELDTH5	YELDTH4	YELDTH3	YELDTH2	YELDTH1	YELDTH0	Yellow Declare Threshold	P 201
XBF	YELCTH7	YELCTH6	YELCTH5	YELCTH4	YELCTH3	YELCTH2	YELCTH1	YELCTH0	Yellow Clear Threshold	P 201
XC0	AISDTH7	AISDTH6	AISDTH5	AISDTH4	AISDTH3	AISDTH2	AISDTH1	AISDTH0	AIS Declare Threshold	P 202
XC1	AISCTH7	AISCTH6	AISCTH5	AISCTH4	AISCTH3	AISCTH2	AISCTH1	AISCTH0	AIS Clear Threshold	P 202
XC2	-	-	-	-	-	-	UPDAT	AUTOUPD	PMON Control	P 203
XC3	PRDGOVE	-	-	DDSOVE	COFAOVE	OOFOVE	FEROVE	CRCOVE	PMON Interrupt Control 0	P 204
XC4	-	-	-	-	-	-	-	LCVOVE	PMON Interrupt Control 1	P 204
XC5	PRDGOVI	-	-	DDSOVI/	COFAOVI	OOFOVI	FEROVI	CRCOVI	PMON Interrupt Indication 0	P 205
XC6	-	-	-	-	-	-	-	LCVOVI	PMON Interrupt Indication 1	P 205

T1/J1 Reg (Hex)	Bit 7	Bit 6	Bit 5	Bit 4	Bit 3	Bit 2	Bit 1	Bit 0	Register Name	Reference Page
XC7	-	-	-	-	PRBSMODE1	PRBSMODE0	PRBSDIR	TESTEN	TPLC / RPLC / PRGD Test Configuration	P 206
XC8	-	-	-	-	-	-	-	BUSY	TPLC Access Status	P 207
XC9	RWN	ADDRESS6	ADDRESS5	ADDRESS4	ADDRESS3	ADDRESS2	ADDRESS1	ADDRESS0	TPLC Access Control	P 207
XCA	D7	D6	D5	D4	D3	D2	D1	D0	TPLC Access Data	P 207
XCB	SIGSNAP	GSTRKEN	ZCS2	ZCS1	ZCS0	GSUBST2	GSUBST1	GSUBST0	TPLC Configuration	P 208
XCC	-	-	-	-	ABXX	-	-	PCCE	TPLC Control Enable	P 209
XCD	-	-	-	-	-	-	-	BUSY	RPLC Access Status	P 210
XCE	RWN	ADDRESS6	ADDRESS5	ADDRESS4	ADDRESS3	ADDRESS2	ADDRESS1	ADDRESS0	RPLC Access Control	P 210
XCF	D7	D6	D5	D4	D3	D2	D1	D0	RPLC Access Data	P 210
XD0	SIGSNAP	GSTRKEN	-	-	-	GSUBST2	GSUBST1	GSUBST0	RPLC Configuration	P 211
XD1	-	-	-	-	ABXX	SIGFIX	POL	PCCE	RPLC Control Enable	P 212
XD2	-	-	-	-	FREEZE	DEB	SIGE	SIGF	RCRB Configuration	P 213
XD3	-	-	-	-	-	-	-	BUSY	RCRB Access Status	P 214
XD4	RWN	ADDRESS6	ADDRESS5	ADDRESS4	ADDRESS3	ADDRESS2	ADDRESS1	ADDRESS0	RCRB Access Control	P 214
XD5	D7	D6	D5	D4	D3	D2	D1	D0	RCRB Access Data	P 214
XD6	COSI8	COSI7	COSI6	COSI5	COSI4	COSI3	COSI2	COSI1	RCRB State Change Indication 0	P 215
XD7	COSI16	COSI15	COSI14	COSI13	COSI12	COSI11	COSI10	COSI9	RCRB State Change Indication 1	P 215
XD8	COSI24	COSI23	COSI22	COSI21	COSI20	COSI19	COSI18	COSI17	RCRB State Change Indication 2	P 215

Note:
* The Reference Clock Output Control register (addressed X3E) is available in ZB revision only, otherwise, it is reserved.

5.1.1.2 Indirect Register

PMON

Address (Hex)	Bit 7	Bit 6	Bit 5	Bit 4	Bit 3	Bit 2	Bit 1	Bit 0	Register	Reference Page
00	CRCE7	CRCE6	CRCE5	CRCE4	CRCE3	CRCE2	CRCE1	CRCE0	CRCE Counter Mapping 0	P 216
01	-	-	-	-	-	-	CRCE9	CRCE8	CRCE Counter Mapping 1	P 216
02	FER7	FER6	FER5	FER4	FER3	FER2	FER1	FER0	FER Counter Mapping 0	P 217
03	-	-	-	-	FER11	FER10	FER9	FER8	FER Counter Mapping 1	P 217
04	-	-	-	-	-	COFA2	COFA1	COFA0	COFA Counter Mapping	P 218
05	-	-	-	OOF4	OOF3	OOF2	OOF1	OOF0	OOF Counter Mapping	P 218
06	PRGD7	PRGD6	PRGD5	PRGD4	PRGD3	PRGD2	PRGD1	PRGD0	PRGD Counter Mapping 0	P 219
07	PRGD15	PRGD14	PRGD13	PRGD12	PRGD11	PRGD10	PRGD9	PRGD8	PRGD Counter Mapping 1	P 219
08	LCV7	LCV6	LCV5	LCV4	LCV3	LCV2	LCV1	LCV0	LCV Counter Mapping 0	P 220
09	LCV15	LCV14	LCV13	LCV12	LCV11	LCV10	LCV9	LCV8	LCV Counter Mapping 1	P 220
0A	DDSE7	DDSE6	DDSE5	DDSE4	DDSE3	DDSE2	DDSE1	DDSE0	DDSE Counter Mapping 0	P 221
0B	-	-	-	-	-	-	DDSE9	DDSE8	DDSE Counter Mapping 1	P 221

RCRB

Address (Hex)	Bit 7	Bit 6	Bit 5	Bit 4	Bit 3	Bit 2	Bit 1	Bit 0	Register	Reference Page
01 ~ 18	-	-	-	EXTRACT	A	B	C	D	Extracted Signaling Data/Extract Enable Register for CH1 ~ CH24	P 222

RPLC

Address (Hex)	Bit 7	Bit 6	Bit 5	Bit 4	Bit 3	Bit 2	Bit 1	Bit 0	Register	Reference Page
01 ~ 18	SUBST2	SUBST1	SUBST0	SINV	OINV	EINV	G56K	GAP	Channel Control Register for CH1 ~ CH24	P 223
21 ~ 38	DTRK7	DTRK6	DTRK5	DTRK4	DTRK3	DTRK2	DTRK1	DTRK0	Data Trunk Conditioning Code Register for CH1 ~ CH24	P 224
41 ~ 58	-	TEST	-	STRKEN	A	B	C	D	Signaling Trunk Conditioning Code Register for CH1 ~ CH24	P 225

TPLC

Address (Hex)	Bit 7	Bit 6	Bit 5	Bit 4	Bit 3	Bit 2	Bit 1	Bit 0	Register	Reference Page
01 ~ 18	SUBST2	SUBST1	SUBST0	SINV	OINV	EINV	G56K	GAP	Channel Control Register for CH1 ~ CH24	P 226
21 ~ 38	DTRK7	DTRK6	DTRK5	DTRK4	DTRK3	DTRK2	DTRK1	DTRK0	Data Trunk Conditioning Code Register for CH1 ~ CH24	P 227
41 ~ 58	-	TEST	SIGINS	STRKEN	A	B	C	D	Signaling Trunk Conditioning Code Register for CH1 ~ CH24	P 228

5.1.2 E1 MODE

5.1.2.1 Direct Register

E1 Reg (Hex)	Bit 7	Bit 6	Bit 5	Bit 4	Bit 3	Bit 2	Bit 1	Bit 0	Register Name	Reference Page
001	ID7	ID6	ID5	ID4	ID3	ID2	ID1	ID0	Chip ID For Quad Transceiver	P 229
002 ~ 003	-	-	-	-	-	-	-	-	Reserved	-
004	-	-	-	-	-	-	-	-	Software Reset	P 229
005	-	-	-	-	MON3	MON2	MON1	MON0	G.772 Monitor Control	P 230
006	-	-	-	-	LEVEL1	LEVEL0	DIR1	DIR0	GPIO Control	P 231
007	-	-	-	RO21	RO20	-	RO11	RO10	Reference Clock Output Select	P 232
008	-	-	-	-	-	-	-	-	Reserved	-
009	-	-	-	-	INT4	INT3	INT2	INT1	Interrupt Requisition Link ID	P 233
00A	-	-	-	-	-	-	-	TMOVE	Timer Interrupt Control	P 233
00B	-	-	-	-	-	-	-	TMOVI	Timer Interrupt Indication	P 233
00C ~ 00D	-	-	-	-	-	-	-	-	Reserved	-
00E	-	LINKSEL1	LINKSEL0	-	ADDR3	ADDR2	ADDR1	ADDR0	PMON Access Port	P 234
00F	DAT7	DAT6	DAT5	DAT4	DAT3	DAT2	DAT1	DAT0	PMON Access Data	P 234
010	-	-	-	RSLVCK	RMUX	MTSDA	TSLVCK	TMUX	Backplane Global Configuration	P 235
011 ~ 01F	-	-	-	-	-	-	-	-	Reserved	-
X20	-	-	-	-	T1/J1	FM1	FM0	TEMODE	T1/J1 Or E1 Mode	P 113
X21	-	-	TJITT_TEST	TJA_LIMT	TJA_E	TJA_DP1	TJA_DP0	TJA_BW	Transmit Jitter Attenuation Configuration	P 236
X22	-	-	-	T_OFF	-	-	-	T_MD	Transmit Configuration 0	P 237
X23	-	-	DFM_ON	T_HZ	PULS3	PULS2	PULS1	PULS0	Transmit Configuration 1	P 238
X24	-	-	SCAL5	SCAL4	SCAL3	SCAL2	SCAL1	SCAL0	Transmit Configuration 2	P 239
X25	DONE	RW	UI1	UI0	SAMP3	SAMP2	SAMP1	SAMP0	Transmit Configuration 3	P 240
X26	-	WDAT6	WDAT5	WDAT4	WDAT3	WDAT2	WDAT1	WDAT0	Transmit Configuration 4	P 241
X27	-	-	RJITT_TEST	RJA_LIMT	RJA_E	RJA_DP1	RJA_DP0	RJA_BW	Receive Jitter Attenuation Configuration	P 242
X28	-	-	-	R_OFF	-	-	-	R_MD	Receive Configuration 0	P 243
X29	-	EQ_ON	-	LOS4	LOS3	LOS2	LOS1	LOS0	Receive Configuration 1	P 244
X2A	-	-	SLICE1	SLICE0	UPDW1	UPDW0	MG1	MG0	Receive Configuration 2	P 245
X2B	-	DLLP	SLLP	SRLP	-	RLP	ALP	DLP	Maintenance Function Control 0	P 246
X2C	-	-	-	-	-	LAC	RAISE	ATAO	Maintenance Function Control 1	P 247
X2D ~ X30	-	-	-	-	-	-	-	-	Reserved	-
X31	-	BPV_INS	-	EXZ_DEF	EXZ_ERR1	EXZ_ERR0	CNT_MD	CNT_TRF	Maintenance Function Control 2	P 248
X32	-	-	T_TERM2	T_TERM1	T_TERM0	R_TERM2	R_TERM1	R_TERM0	Transmit And Receive Termination Configuration	P 249
X33	-	-	-	-	-	DF_IE	-	LOS_IE	Interrupt Enable Control 0	P 249
X34	-	DAC_IE	TJA_IE	RJA_IE	-	EXZ_IE	CV_IE	CNT_IE	Interrupt Enable Control 1	P 250
X35	-	-	-	-	-	DF_IES	-	LOS_IES	Interrupt Trigger Edges Select	P 251
X36	-	-	-	-	-	DF_S	-	LOS_S	Line Status Register 0	P 251
X37	-	-	-	LATT4	LATT3	LATT2	LATT1	LATT0	Line Status Register 1	P 252

E1 Reg (Hex)	Bit 7	Bit 6	Bit 5	Bit 4	Bit 3	Bit 2	Bit 1	Bit 0	Register Name	Reference Page
X38	-	TJITT6	TJITT5	TJITT4	TJITT3	TJITT2	TJITT1	TJITT0	Transmit Jitter Measure Value Indication	P 253
X39	-	RJITT6	RJITT5	RJITT4	RJITT3	RJITT2	RJITT1	RJITT0	Receive Jitter Measure Value Indication	P 253
X3A	-	-	-	-	-	DF_IS	-	LOS_IS	Interrupt Status 0	P 254
X3B	-	DAC_IS	TJA_IS	RJA_IS	-	EXZ_IS	CV_IS	CNTOV_IS	Interrupt Status 1	P 255
X3C	CNTH[7]	CNTH[6]	CNTH[5]	CNTH[4]	CNTH[3]	CNTH[2]	CNTH[1]	CNTH[0]	EXZ Error Counter H-Byte	P 256
X3D	CNTL[7]	CNTL[6]	CNTL[5]	CNTL[4]	CNTL[3]	CNTL[2]	CNTL[1]	CNTL[0]	EXZ Error Counter L-Byte	P 256
X3E	-	-	-	-	-	-	-	REFH_LOS	Reference Clock Output Control *	P 256
X3F	-	-	-	-	-	-	-	LIU	Interrupt Module Indication 2	P 257
X40	-	-	ALARM	PMON	PRGD	RCRB	FGEN	FRMR	Interrupt Module Indication 0	P 257
X41	THDLC3	THDLC2	THDLC1	RHDLC3	RHDLC2	RHDLC1	ELST	TRSI/RESI	Interrupt Module Indication 1	P 258
X42	-	-	-	DE	FE	CMS	FSINV	FSTYP	TBIF Option Register	P 259
X43	-	-	-	-	-	-	-	TMODE	TBIF Operating Mode	P 260
X44	-	TSOFF6	TSOFF5	TSOFF4	TSOFF3	TSOFF2	TSOFF1	TSOFF0	TBIF TS Offset	P 261
X45	-	-	-	-	EDGE	BOFF2	BOFF1	BOFF0	TBIF Bit Offset	P 261
X46	-	-	-	-	DE	FE	CMS	TRI	RBIF Option Register	P 262
X47	-	-	-	-	-	-	-	RMODE	RBIF Mode	P 263
X48	-	-	-	FSINV	OHD	SMFS	CMFS	-	RBIF Frame Pulse	P 263
X49	-	TSOFF6	TSOFF5	TSOFF4	TSOFF3	TSOFF2	TSOFF1	TSOFF0	RBIF TS Offset	P 264
X4A	-	-	-	-	EDGE	BOFF2	BOFF1	BOFF0	RBIF Bit Offset	P 264
X4B	-	-	-	-	-	-	RCOFAI	TCOFAI	RTSFS Change Indication	P 265
X4C	-	-	-	-	-	-	RCOFAE	TCOFAE	RTSFS Interrupt Control	P 265
X4D	-	-	-	-	UNFM	REFCRCE	REFEN	REFR	FRMR Mode 0	P 266
X4E	BIT2C	CASEN	CRCEN	CNTNFAS	WORDERR	TS16C	SMFASC	C2NCIWCK	FRMR Mode 1	P 267
X4F	-	-	-	C2NCIWV	OOSMFV	OOCMFV	OOOFV	OOFV	FRMR Status	P 268
X50	-	-	-	C2NCIWE	OOSMFE	OOCMFE	OOOFE	OOFE	FRMR Interrupt Control 0	P 269
X51	ISMFPE	ICSMFPE	SMFERE	ICMFPE	CMFERE	CRCEE	FERE	COFAE	FRMR Interrupt Control 1	P 270
X52	-	-	EXCRCERI	C2NCIWI	OOSMFI	OOCMFI	OOOFI	OOFI	FRMR Interrupt Indication 0	P 271
X53	ISMFPI	ICSMFPI	SMFERI	ICMFPI	CMFERI	CRCEI	FERI	COFAI	FRMR Interrupt Indication 1	P 272
X54	Si0	Si1	A	Sa4	Sa5	Sa6	Sa7	Sa8	TS0 International / National	P 273
X55	-	-	-	-	X0	Y	X1	X2	TS16 Spare	P 274
X56	-	-	-	-	Sa41	Sa42	Sa43	Sa44	Sa4 Codeword	P 274
X57	-	-	-	-	Sa51	Sa52	Sa53	Sa54	Sa5 Codeword	P 275
X58	-	-	-	-	Sa61	Sa62	Sa63	Sa64	Sa6 Codeword	P 275
X59	-	-	-	-	Sa71	Sa72	Sa73	Sa74	Sa7 Codeword	P 276
X5A	-	-	-	-	Sa81	Sa82	Sa83	Sa84	Sa8 Codeword	P 276
X5B	-	-	-	Sa6-FI	Sa6-EI	Sa6-CI	Sa6-AI	Sa6-8I	Sa6 Codeword Indication	P 277
X5C	Sa6SYN	SaDEB	Sa6SCE	Sa4E	Sa5E	Sa6E	Sa7E	Sa8E	Sa Codeword Interrupt Control	P 278
X5D	-	-	Sa6SCI	Sa4I	Sa5I	Sa6I	Sa7I	Sa8I	Sa Codeword Interrupt Indication	P 279
X5E	-	-	-	-	-	-	-	-	Reserved	-
X5F	-	-	-	-	-	RAICRCV	CFEBEV	V52LINKV	Overhead Error Status	P 280
X60	-	-	TCRCEE	TFEBEE	FEBEE	RAICRCE	CFEBEE	V52LINKE	Overhead Interrupt Control	P 281
X61	-	-	TCRCEI	TFEBEI	FEBEI	RAICRCI	CFEBEI	V52LINKI	Overhead Interrupt Indication	P 282
X62	-	XDIS	SiDIS	FEBEDIS	CRCM	SIGEN	GENCRC	FDIS	E1 Mode	P 283
X63	-	-	-	-	-	-	Si0	Si1	FGEN International Bit	P 284

E1 Reg (Hex)	Bit 7	Bit 6	Bit 5	Bit 4	Bit 3	Bit 2	Bit 1	Bit 0	Register Name	Reference Page
X64	-	-	-	Sa4EN	Sa5EN	Sa6EN	Sa7EN	Sa8EN	FGEN Sa Control	P 285
X65	-	-	-	-	Sa41	Sa42	Sa43	Sa44	Sa4 Code-word	P 286
X66	-	-	-	-	Sa51	Sa52	Sa53	Sa54	Sa5 Code-word	P 286
X67	-	-	-	-	Sa61	Sa62	Sa63	Sa64	Sa6 Code-word	P 286
X68	-	-	-	-	Sa71	Sa72	Sa73	Sa74	Sa7 Code-word	P 287
X69	-	-	-	-	Sa81	Sa82	Sa83	Sa84	Sa8 Code-word	P 287
X6A	-	-	-	-	X0	-	X1	X2	FGEN Extra	P 287
X6B	-	-	TS16LOS	TS16AIS	MFAIS	G706RAI	AUTOYEL-LOW	REMAIS	FGEN Maintenance 0	P 288
X6C	-	-	-	-	-	COFAEN	TXDIS	TAIS	FGEN Maintenance 1	P 289
X6D	-	-	-	SMFE	FASE	SIGMFE	MFE	BFE	FGEN Interrupt Control	P 290
X6E	-	-	-	SMFI	FASI	SIGMFI	MFI	BFI	FGEN Interrupt Indication	P 291
X6F	-	-	CRCINV	CRCPINV	CASPINV	NFASINV	FASALLINV	FAS1INV	Error Insertion	P 292
X70	-	-	-	-	-	-	-	XTS	Transmit Timing Option	P 293
X71	-	-	-	-	RINV	TINV	PATS1	PATS0	PRGD Control	P 293
X72	-	-	-	-	BERE	INV	SYNCV	SYNCE	PRGD Status/Error Control	P 294
X73	-	-	-	-	BERI	-	-	SYNCI	PRGD Interrupt Indication	P 294
X74 ~ X7B	-	-	-	-	-	-	-	-	Reserved	-
X7C	-	-	-	-	-	TRKEN	SLIPD	SLIPE	ELST Configuration	P 295
X7D	-	-	-	-	-	-	-	SLIPI	ELST Interrupt Indication	P 295
X7E	TRKCODE7	TRKCODE 6	TRKCODE 5	TRKCODE 4	TRKCODE 3	TRKCODE2	TRKCODE1	TRKCODE0	ELST Trunk Code	P 295
X7F ~ X83	-	-	-	-	-	-	-	-	Reserved	-
X84	-	-	-	-	-	TDLEN3	TDLEN2	TDLEN1	THDLC Enable Control	P 296
X85	-	EVEN	ODD	TS4	TS3	TS2	TS1	TS0	THDLC1 Assignment	P 297
X86	-	EVEN	ODD	TS4	TS3	TS2	TS1	TS0	THDLC2 Assignment	P 297
X87	-	EVEN	ODD	TS4	TS3	TS2	TS1	TS0	THDLC3 Assignment	P 297
X88	BITEN7	BITEN6	BITEN5	BITEN4	BITEN3	BITEN2	BITEN1	BITEN0	THDLC1 Bit Select	P 298
X89	BITEN7	BITEN6	BITEN5	BITEN4	BITEN3	BITEN2	BITEN1	BITEN0	THDLC2 Bit Select	P 298
X8A	BITEN7	BITEN6	BITEN5	BITEN4	BITEN3	BITEN2	BITEN1	BITEN0	THDLC3 Bit Select	P 298
X8B	-	-	-	-	-	RDLEN3	RDLEN2	RDLEN1	RHDLC Enable Control	P 299
X8C	-	EVEN	ODD	TS4	TS3	TS2	TS1	TS0	RHDLC1 Assignment	P 300
X8D	-	EVEN	ODD	TS4	TS3	TS2	TS1	TS0	RHDLC2 Assignment	P 300
X8E	-	EVEN	ODD	TS4	TS3	TS2	TS1	TS0	RHDLC3 Assignment	P 300
X8F	BITEN7	BITEN6	BITEN5	BITEN4	BITEN3	BITEN2	BITEN1	BITEN0	RHDLC1 Bit Select	P 301
X90	BITEN7	BITEN6	BITEN5	BITEN4	BITEN3	BITEN2	BITEN1	BITEN0	RHDLC2 Bit Select	P 301
X91	BITEN7	BITEN6	BITEN5	BITEN4	BITEN3	BITEN2	BITEN1	BITEN0	RHDLC3 Bit Select	P 301
X92	-	-	LSSUFIL	FISUFIL	ADRM1	ADRM0	RHDLCM	RRST	RHDLC1 Control Register	P 302
X93	-	-	LSSUFIL	FISUFIL	ADRM1	ADRM0	RHDLCM	RRST	RHDLC2 Control Register	P 302
X94	-	-	LSSUFIL	FISUFIL	ADRM1	ADRM0	RHDLCM	RRST	RHDLC3 Control Register	P 302
X95	-	-	-	-	-	-	EMP	PACK	RHDLC1 RFIFO Access Status	P 303
X96	-	-	-	-	-	-	EMP	PACK	RHDLC2 RFIFO Access Status	P 303
X97	-	-	-	-	-	-	EMP	PACK	RHDLC3 RFIFO Access Status	P 303
X98	DAT7	DAT6	DAT5	DAT4	DAT3	DAT2	DAT1	DAT0	RHDLC1 Data	P 304
X99	DAT7	DAT6	DAT5	DAT4	DAT3	DAT2	DAT1	DAT0	RHDLC2 Data	P 304
X9A	DAT7	DAT6	DAT5	DAT4	DAT3	DAT2	DAT1	DAT0	RHDLC3 Data	P 304

E1 Reg (Hex)	Bit 7	Bit 6	Bit 5	Bit 4	Bit 3	Bit 2	Bit 1	Bit 0	Register Name	Reference Page
X9B	-	-	-	-	-	-	OVFLE	RMBEE	RHDLC1 Interrupt Control	P 305
X9C	-	-	-	-	-	-	OVFLE	RMBEE	RHDLC2 Interrupt Control	P 305
X9D	-	-	-	-	-	-	OVFLE	RMBEE	RHDLC3 Interrupt Control	P 305
X9E	-	-	-	-	-	-	OVFLI	RMBEI	RHDLC1 Interrupt Indication	P 306
X9F	-	-	-	-	-	-	OVFLI	RMBEI	RHDLC2 Interrupt Indication	P 306
XA0	-	-	-	-	-	-	OVFLI	RMBEI	RHDLC3 Interrupt Indication	P 306
XA1	HA7	HA6	HA5	HA4	HA3	HA2	HA1	HA0	RHDLC1 High Address	P 307
XA2	HA7	HA6	HA5	HA4	HA3	HA2	HA1	HA0	RHDLC2 High Address	P 307
XA3	HA7	HA6	HA5	HA4	HA3	HA2	HA1	HA0	RHDLC3 High Address	P 307
XA4	LA7	LA6	LA5	LA4	LA3	LA2	LA1	LA0	RHDLC1 Low Address	P 308
XA5	LA7	LA6	LA5	LA4	LA3	LA2	LA1	LA0	RHDLC2 Low Address	P 308
XA6	LA7	LA6	LA5	LA4	LA3	LA2	LA1	LA0	RHDLC3 Low Address	P 308
XA7	-	-	AUTOFISU	EOM	XREP	ABORT	THDLCM	TRST	THDLC1 Control	P 309
XA8	-	-	AUTOFISU	EOM	XREP	ABORT	THDLCM	TRST	THDLC2 Control	P 309
XA9	-	-	AUTOFISU	EOM	XREP	ABORT	THDLCM	TRST	THDLC3 Control	P 309
XAA	-	-	FL1	FL0	LL1	LL0	HL1	HL0	TFIFO1 Threshold	P 311
XAB	-	-	FL1	FL0	LL1	LL0	HL1	HL0	TFIFO2 Threshold	P 311
XAC	-	-	FL1	FL0	LL1	LL0	HL1	HL0	TFIFO3 Threshold	P 311
XAD	DAT7	DAT6	DAT5	DAT4	DAT3	DAT2	DAT1	DAT0	THDLC1 Data	P 312
XAE	DAT7	DAT6	DAT5	DAT4	DAT3	DAT2	DAT1	DAT0	THDLC2 Data	P 312
XAF	DAT7	DAT6	DAT5	DAT4	DAT3	DAT2	DAT1	DAT0	THDLC3 Data	P 312
XB0	-	-	-	-	-	FUL	EMP	RDY	TFIFO1 Status	P 313
XB1	-	-	-	-	-	FUL	EMP	RDY	TFIFO2 Status	P 313
XB2	-	-	-	-	-	FUL	EMP	RDY	TFIFO3 Status	P 313
XB3	-	-	-	-	-	-	UDRUNE	RDYE	THDLC1 Interrupt Control	P 314
XB4	-	-	-	-	-	-	UDRUNE	RDYE	THDLC2 Interrupt Control	P 314
XB5	-	-	-	-	-	-	UDRUNE	RDYE	THDLC3 Interrupt Control	P 314
XB6	-	-	-	-	-	-	UDRUNI	RDYI	THDLC1 Interrupt Indication	P 315
XB7	-	-	-	-	-	-	UDRUNI	RDYI	THDLC2 Interrupt Indication	P 315
XB8	-	-	-	-	-	-	UDRUNI	RDYI	THDLC3 Interrupt Indication	P 315
XB9	-	-	TS16LOSV	TS16AISV	RMAIV	AIS	RAIV	RED	Alarm Status	P 316
XBA	-	-	TS16LOSE	TS16AISE	RMAIE	AISE	RAIE	REDE	Alarm Control	P 317
XBB	-	-	TS16LOSI	TS16AISI	RMAII	AISI	RAII	REDI	Alarm Indication	P 318
XBC	-	-	-	-	-	-	AISC	RAIC	Alarm Criteria Control	P 319
XBD ~ XC1	-	-	-	-	-	-	-	-	Reserved	-
XC2	-	-	-	-	-	-	UPDAT	AUTOUPD	PMON Control	P 319
XC3	PRDGOVE	TFEBEOVE	FEBEOVE	TCRCOVE	COFAOVE	OOFOVE	FEROVE	CRCOVE	PMON Interrupt Control 0	P 320
XC4	-	-	-	-	-	-	-	LCVOVE	PMON Interrupt Control 1	P 321
XC5	PRDGOVI	TFEBEOVI	FEBEOVI	TCRCOVI	COFAOVI	OOFOVI	FEROVI	CRCOVI	PMON Interrupt Indication 0	P 322
XC6	-	-	-	-	-	-	-	LCVOVI	PMON Interrupt Indication 1	P 323
XC7	-	-	-	-	PRBSMOD E1	PRBSMOD E0	PRBSDIR	TESTEN	TPLC / RPLC / PRGD Test Configuration	P 323
XC8	-	-	-	-	-	-	-	BUSY	TPLC Access Status	P 324
XC9	RWN	ADDRESS6	ADDRESS5	ADDRESS4	ADDRESS3	ADDRESS2	ADDRESS1	ADDRESS0	TPLC Access Control	P 324
XCA	D7	D6	D5	D4	D3	D2	D1	D0	TPLC Access Data	P 324
XCB	SIGSNAP	GSTRKEN	-	-	-	GSUBST2	GSUBST1	GSUBST0	TPLC Configuration	P 325
XCC	-	-	-	-	-	-	-	PCCE	TPLC Control Enable	P 325

E1 Reg (Hex)	Bit 7	Bit 6	Bit 5	Bit 4	Bit 3	Bit 2	Bit 1	Bit 0	Register Name	Reference Page
XCD	-	-	-	-	-	-	-	BUSY	RPLC Access Status	P 326
XCE	RWN	ADDRESS6	ADDRESS5	ADDRESS4	ADDRESS3	ADDRESS2	ADDRESS1	ADDRESS0	RPLC Access Control	P 326
XCF	D7	D6	D5	D4	D3	D2	D1	D0	RPLC Access Data	P 326
XD0	SIGSNAP	GSTRKEN	-	-	-	GSUBST2	GSUBST1	GSUBST0	RPLC Configuration	P 327
XD1	-	-	-	-	-	-	-	PCCE	RPLC Control Enable	P 328
XD2	-	-	-	-	FREEZE	DEB	SIGE	-	RCRB Configuration	P 328
XD3	-	-	-	-	-	-	-	BUSY	RCRB Access Status	P 329
XD4	RWN	ADDRESS6	ADDRESS5	ADDRESS4	ADDRESS3	ADDRESS2	ADDRESS1	ADDRESS0	RCRB Access Control	P 329
XD5	D7	D6	D5	D4	D3	D2	D1	D0	RCRB Access Data	P 329
XD6	COSI8	COSI7	COSI6	COSI5	COSI4	COSI3	COSI2	COSI1	RCRB State Change Indication 0	P 330
XD7	COSI16	COSI15	COSI14	COSI13	COSI12	COSI11	COSI10	COSI9	RCRB State Change Indication 1	P 330
XD8	COSI24	COSI23	COSI22	COSI21	COSI20	COSI19	COSI18	COSI17	RCRB State Change Indication 2	P 331
XD9	-	-	COSI30	COSI29	COSI28	COSI27	COSI26	COSI25	RCRB State Change Indication 3	P 331

Note:
* The Reference Clock Output Control register (addressed X3E) is available in ZB revision only, otherwise, it is reserved.

5.1.2.2 Indirect Register

PMON

Address (Hex)	Bit 7	Bit 6	Bit 5	Bit 4	Bit 3	Bit 2	Bit 1	Bit 0	Register	Reference Page
00	CRCE7	CRCE6	CRCE5	CRCE4	CRCE3	CRCE2	CRCE1	CRCE0	CRCE Counter Mapping 0	P 332
01	-	-	-	-	-	-	CRCE9	CRCE8	CRCE Counter Mapping 1	P 332
02	FER7	FER6	FER5	FER4	FER3	FER2	FER1	FER0	FER Counter Mapping 0	P 333
03	-	-	-	-	FER11	FER10	FER9	FER8	FER Counter Mapping 1	P 333
04	-	-	-	-	-	COFA2	COFA1	COFA0	COFA Counter Mapping	P 334
05	-	-	-	OOF4	OOF3	OOF2	OOF1	OOF0	OOF Counter Mapping	P 334
06	PRGD7	PRGD6	PRGD5	PRGD4	PRGD3	PRGD2	PRGD1	PRGD0	PRGD Counter Mapping 0	P 335
07	PRGD15	PRGD14	PRGD13	PRGD12	PRGD11	PRGD10	PRGD9	PRGD8	PRGD Counter Mapping 1	P 335
08	LCV7	LCV6	LCV5	LCV4	LCV3	LCV2	LCV1	LCV0	LCV Counter Mapping 0	P 336
09	LCV15	LCV14	LCV13	LCV12	LCV11	LCV10	LCV9	LCV8	LCV Counter Mapping 1	P 336
0A	TCRCE7	TCRCE6	TCRCE5	TCRCE4	TCRCE3	TCRCE2	TCRCE1	TCRCE0	TCRCE Counter Mapping 0	P 337
0B	-	-	-	-	-	-	TCRCE9	TCRCE8	TCRCE Counter Mapping 1	P 337
0C	FEBE7	FEBE6	FEBE5	FEBE4	FEBE3	FEBE2	FEBE1	FEBE0	FEBE Counter Mapping 0	P 338
0D	-	-	-	-	-	-	FEBE9	FEBE8	FEBE Counter Mapping 1	P 338
0E	TFEBE7	TFEBE6	TFEBE5	TFEBE4	TFEBE3	TFEBE2	TFEBE1	TFEBE0	TFEBE Counter Mapping 0	P 339
0F	-	-	-	-	-	-	TFEBE9	TFEBE8	TFEBE Counter Mapping 1	P 339

RCRB

Address (Hex)	Bit 7	Bit 6	Bit 5	Bit 4	Bit 3	Bit 2	Bit 1	Bit 0	Register	Reference Page
01 ~ 0F	-	-	-	EXTRACT	A	B	C	D	Extracted Signaling Data/Extract Enable Register for TS1 ~ TS15	P 340
11 ~ 1F	-	-	-	EXTRACT	A	B	C	D	Extracted Signaling Data/Extract Enable Register for TS17 ~ TS31	P 340

RPLC

Address (Hex)	Bit 7	Bit 6	Bit 5	Bit 4	Bit 3	Bit 2	Bit 1	Bit 0	Register	Reference Page
00 ~ 1F	SUBST2	SUBST1	SUBST0	SINV	OINV	EINV	G56K	GAP	Timeslot Control Register for TS0 ~ TS31	P 341
20 ~ 3F	DTRK7	DTRK6	DTRK5	DTRK4	DTRK3	DTRK2	DTRK1	DTRK0	Data Trunk Conditioning Code Register for TS0 ~ TS31	P 342
41 ~ 4F	-	TEST	-	STRKEN	A	B	C	D	Signaling Trunk Conditioning Code Register for TS1 ~ TS15	P 343
51 ~ 5F	-	TEST	-	STRKEN	A	B	C	D	Signaling Trunk Conditioning Code Register for TS17 ~ TS31	P 343

TPLC

Address (Hex)	Bit 7	Bit 6	Bit 5	Bit 4	Bit 3	Bit 2	Bit 1	Bit 0	Register	Reference Page
00 ~ 1F	SUBST2	SUBST1	SUBST0	SINV	OINV	EINV	G56K	GAP	Timeslot Control Register for TS0 ~ TS31	P 344
20 ~ 3F	DTRK7	DTRK6	DTRK5	DTRK4	DTRK3	DTRK2	DTRK1	DTRK0	Data Trunk Conditioning Code Register for TS0 ~ TS31	P 345
41 ~ 4F	-	TEST	-	STRKEN	A	B	C	D	Signaling Trunk Conditioning Code Register for TS1 ~ TS15	P 346
51 ~ 5F	-	TEST	-	STRKEN	A	B	C	D	Signaling Trunk Conditioning Code Register for TS17 ~ TS31	P 346

5.2 REGISTER DESCRIPTION

Depending on the operating mode, the registers are configured for T1/J1 or E1. Before setting any other registers, the operating mode should be selected in registers 020H, 120H, 220H and 320H.

According to the access method, the registers can be divided into direct registers and indirect registers. In the direct registers, the registers can be divided into global configuration registers and per-link configuration registers. The register with only one address following its name is the global configuration register, and the register with a set of address (four addresses) following its name is the per-link configuration register.

T1/J1 Or E1 Mode (020H, 120H, 220H, 320H)

Bit No.	7	6	5	4	3	2	1	0
Bit Name	Reserved				T1/J1	FM1	FM0	TEMODE
Type					R/W	R/W	R/W	R/W
Default					0	0	0	0

T1/J1:

This bit is valid when T1/J1 operating mode is selected by the corresponding TEMODE bit (b0, 020H,...). It selects the operating mode between T1 and J1 for the current link.

= 0: T1 mode is selected.

= 1: J1 mode is selected.

FM[1:0]:

These two bits are valid when T1/J1 operating mode is selected by the corresponding TEMODE bit (b0, 020H,...). They select the operating format.

= 00: SF format is selected.

= 01: ESF format is selected.

= 10: T1 DM format is selected. This selection is valid in T1 operating mode only.

= 11: SLC-96 format is selected. This selection is valid in T1 operating mode only.

TEMODE:

This bit selects the operating mode for the current link.

= 0: E1 mode is selected.

= 1: T1/J1 mode is selected.

5.2.1 T1/J1 MODE

5.2.1.1 Direct Register

T1/J1 Chip ID For Quad Transceiver (001H)

Bit No.	7	6	5	4	3	2	1	0
Bit Name	ID7	ID6	ID5	ID4	ID3	ID2	ID1	ID0
Type	R	R	R	R	R	R	R	R
Default	0	0	1	0	X	X	X	X

ID[7:0]:

The ID[7:0] bits are pre-set. The ID[7:4] bits represent the IDT82P2284 device. The ID[3:0] bits represent the current version number (‘0001’ is for the first version).

T1/J1 Software Reset (004H)

Bit No.	7	6	5	4	3	2	1	0
Bit Name	X							
Type								
Default								

A write operation to this register will generate a software reset.

The software reset will set all the registers except the T1/J1 Or E1 Mode register (020H,...) to their default values. If the setting is changed in the T1/J1 Or E1 Mode register (020H,...), a software reset must be applied.

T1/J1 G.772 Monitor Control (005H)

Bit No.	7	6	5	4	3	2	1	0
Bit Name	Reserved				MON3	MON2	MON1	MON0
Type					R/W	R/W	R/W	R/W
Default					0	0	0	0

MON[3:0]:

These bits determine whether the G.772 Monitor is implemented. When the G.772 Monitor is implemented, these bits select one transmitter or receiver to be monitored by the Link 1.

MON[3:0]	Monitored Path	MON[3:0]	Monitored Path
0000	No transmitter or receiver is monitored.	1000	No transmitter or receiver is monitored.
0001	The receiver of the Link 2 is monitored.	1001	The transmitter of the Link 2 is monitored.
0010	The receiver of the Link 3 is monitored.	1010	The transmitter of the Link 3 is monitored.
0011	The receiver of the Link 4 is monitored.	1011	The transmitter of the Link 4 is monitored.
0100	Reserved	1100	Reserved
0101		1101	
0110		1110	
0111		1111	

T1/J1 GPIO Control (006H)

Bit No.	7	6	5	4	3	2	1	0
Bit Name	Reserved				LEVEL1	LEVEL0	DIR1	DIR0
Type					R/W	R/W	R/W	R/W
Default					0	0	1	1

LEVEL[1]:

When the GPIO[1] pin is defined as an output port, this bit can be read and written:
= 0: The GPIO[1] pin outputs low level.
= 1: The GPIO[1] pin outputs high level.
When the GPIO[1] pin is defined as an input port, this bit can only be read:
= 0: Low level is input on the GPIO[1] pin.
= 1: High level is input on the GPIO[1] pin.

LEVEL[0]:

When the GPIO[0] pin is defined as an output port, this bit can be read and written:
= 0: The GPIO[0] pin outputs low level.
= 1: The GPIO[0] pin outputs high level.
When the GPIO[0] pin is defined as an input port, this bit can only be read:
= 0: Low level is input on the GPIO[0] pin.
= 1: High level is input on the GPIO[0] pin.

DIR[1]:

= 0: The GPIO[1] pin is used as an output port.
= 1: The GPIO[1] pin is used as an input port.

DIR[0]:

= 0: The GPIO[0] pin is used as an output port.
= 1: The GPIO[0] pin is used as an input port.

T1/J1 Reference Clock Output Select (007H)

Bit No.	7	6	5	4	3	2	1	0
Bit Name	Reserved			RO21	RO20	Reserved	RO11	RO10
Type				R/W	R/W		R/W	R/W
Default				0	0		0	0

RO2[1:0]:

When no LOS is detected, the REFB_OUT pin outputs a recovered clock from the Clock and Data Recovery function block of one of the four links. The link is selected by these bits:

RO2[1:0]	Selected Link
00	Link 1
01	Link 2
10	Link 3
11	Link 4

When LOS is detected, the REFB_OUT pin outputs MCLK or high level, as selected by the REFH_LOS bit (b0, T1/J1-03EH,...). (This feature is available in ZB revision only).

RO1[1:0]:

When no LOS is detected, the REFA_OUT pin outputs a recovered clock from the Clock and Data Recovery function block of one of the four links. The link is selected by these bits:

RO2[1:0]	Selected Link
00	Link 1
01	Link 2
10	Link 3
11	Link 4

When LOS is detected, the REFA_OUT pin outputs MCLK or high level, as selected by the REFH_LOS bit (b0, T1/J1-03EH,...). (This feature is available in ZB revision only).

T1/J1 Interrupt Requisition Link ID (009H)

Bit No.	7	6	5	4	3	2	1	0
Bit Name	Reserved				INT4	INT3	INT2	INT1
Type					R	R	R	R
Default					0	0	0	0

INTn:

= 0: No interrupt is generated in the corresponding link.

= 1: At least one interrupt is generated in the corresponding link.

T1/J1 Timer Interrupt Control (00AH)

Bit No.	7	6	5	4	3	2	1	0
Bit Name	Reserved							TMOVE
Type								R/W
Default								0

TMOVE:

= 0: Disable the interrupt on the $\overline{INT}$ pin when the TMOVI bit (b0, T1/J1-00BH) is ‘1’.

= 1: Enable the interrupt on the $\overline{INT}$ pin when the TMOVI bit (b0, T1/J1-00BH) is ‘1’.

T1/J1 Timer Interrupt Indication (00BH)

Bit No.	7	6	5	4	3	2	1	0
Bit Name	Reserved							TMOVI
Type								R
Default								0

TMOVI:

The device times every one second.

= 0: One second timer is not over.

= 1: One second timer is over.

This bit will be cleared if a ’1’ is written to it.

T1/J1 PMON Access Port (00EH)

Bit No.	7	6	5	4	3	2	1	0
Bit Name	Reserved	LINKSEL1	LINKSEL0	Reserved	ADDR3	ADDR2	ADDR1	ADDR0
Type		R/W	R/W		R/W	R/W	R/W	R/W
Default		0	0		0	0	0	0

LINKSEL[1:0]:

These bits select one of the four links. One of the PMON indirect registers of the selected link can be accessed by the microprocessor.

LINKSEL[1:0]	Selected Link
00	Link 1
01	Link 2
10	Link 3
11	Link 4

ADDR[3:0]:

These bits select one of the PMON indirect registers of the selected link to be accessed by the microprocessor.

Address	PMON Indirect Register	Address	PMON Indirect Register
00H	CRCE Counter Mapping 0	06H	PRGD Counter Mapping 0
01H	CRCE Counter Mapping 1	07H	PRGD Counter Mapping 1
02H	FER Counter Mapping 0	08H	LCV Counter Mapping 0
03H	FER Counter Mapping 1	09H	LCV Counter Mapping 1
04H	COFA Counter Mapping	0AH	DDSE Counter Mapping 0
05H	OOF Counter Mapping	0BH	DDSE Counter Mapping 1

T1/J1 PMON Access Data (00FH)

Bit No.	7	6	5	4	3	2	1	0
Bit Name	DAT7	DAT6	DAT5	DAT4	DAT3	DAT2	DAT1	DAT0
Type	R	R	R	R	R	R	R	R
Default	0	0	0	0	0	0	0	0

DAT[7:0]:

These bits hold the value which is read from the selected PMON indirect register.

T1/J1 Backplane Global Configuration (010H)

Bit No.	7	6	5	4	3	2	1	0
Bit Name	Reserved			RSLVCK	RMUX	MTSDA	TSLVCK	TMUX
Type				R/W	R/W	R/W	R/W	R/W
Default				1	0	1	1	0

RSLVCK:

This bit is valid when all four links are in the Receive Clock Slave mode.
= 0: Each link uses its own clock signal on the RSCKn pin and framing pulse on the RSFSn pin.
= 1: All four links use the clock signal on the RSCK[1] pin and the framing pulse on the RSFS[1] pin.

RMUX:

= 0: The Receive System Interface of the device is operated in the Non-multiplexed mode.
= 1: The Receive System Interface of the device is operated in the Multiplexed mode.

MTSDA:

This bit is valid in Transmit Multiplexed mode. It selects one multiplexed bus for the Transmit System Interface of the device.
= 0: The multiplexed bus B is selected. The data and signaling bits are de-multiplexed from multiplexed bus B.
= 1: The multiplexed bus A is selected. The data and signaling bits are de-multiplexed from multiplexed bus A.

TSLVCK:

This bit is valid when all four links are in the Transmit Clock Slave mode.
= 0: Each link uses its own timing signal on the TSCKn pin and framing pulse on the TSFSn pin.
= 1: All four links use the timing signal on the TSCK[1] pin and the framing pulse on the TSFS[1] pin.

TMUX:

= 0: The Transmit System Interface of the device is operated in the Non-multiplexed mode.
= 1: The Transmit System Interface of the device is operated in the Multiplexed mode.

T1/J1 Transmit Jitter Attenuation Configuration (021H, 121H, 221H, 321H)

Bit No.	7	6	5	4	3	2	1	0
Bit Name	Reserved		TJITT_TEST	TJA_LIMT	TJA_E	TJA_DP1	TJA_DP0	TJA_BW
Type			R/W	R/W	R/W	R/W	R/W	R/W
Default			0	0	0	0	0	0

TJITT_TEST:

= 0: The real time interval between the read and write pointer of the FIFO is indicated in the TJITT[6:0] bits (b6~0, T1/J1-038H,...). That is, the current interval between the read and write pointer of the FIFO will be written into the TJITT[6:0] bits (b6~0, T1/J1-038H,...).

= 1: The peak-peak interval between the read and write pointer of the FIFO is indicated in the TJITT[6:0] bits (b6~0, T1/J1-038H,...). That is, the current interval is compared with the old one in the TJITT[6:0] bits (b6~0, T1/J1-038H,...) and the larger one will be indicated by the TJITT[6:0] bits (b6~0, T1/J1-038H,...); otherwise, the value in the TJITT[6:0] bits (b6~0, T1/J1-038H,...) will not be changed.

TJA_LIMT:

When the read and write pointer of the FIFO are within 2/3/4 bits (corresponding to the FIFO depth) of overflowing or underflowing, the bandwidth of the JA can be widened to track the short term input jitter, thereby avoiding data corruption. This bit selects whether the bandwidth is normal or widened.

= 0: Normal bandwidth is selected.

= 1: Widen bandwidth is selected. In this case, the JA will not attenuate the input jitter until the read/write pointer's position is outside the 2/3/4 bits window.

TJA_E:

= 0: Disable the Transmit Jitter Attenuator.

= 1: Enable the Transmit Jitter Attenuator.

TJA_DP[1:0]:

These two bits select the Jitter Attenuation Depth.

= 00: The Jitter Attenuation Depth is 128-bit.

= 01: The Jitter Attenuation Depth is 64-bit.

= 10 / 11: The Jitter Attenuation Depth is 32-bit.

TJA_BW:

This bit select the Jitter Transfer Function Bandwidth.

= 0: 5 Hz.

= 1: 1.26 Hz.

T1/J1 Transmit Configuration 0 (022H, 122H, 222H, 322H)

Bit No.	7	6	5	4	3	2	1	0
Bit Name	Reserved			T_OFF	Reserved			T_MD
Type				R/W				R/W
Default				0				0

T_OFF:

= 0: The transmit path is power up.

= 1: The transmit path is power down. The Line Driver is in high impedance.

T_MD:

This bit selects the line code rule to encode the data stream to be transmitted.

= 0: The B8ZS encoder is selected.

= 1: The AMI encoder is selected.

T1/J1 Transmit Configuration 1 (023H, 123H, 223H, 323H)

Bit No.	7	6	5	4	3	2	1	0
Bit Name	Reserved		DFM_ON	T_HZ	PULS3	PULS2	PULS1	PULS0
Type			R/W	R/W	R/W	R/W	R/W	R/W
Default			0	1	0	0	0	0

DFM_ON:
= 0: The Driver Failure Monitor is disabled.
= 1: The Driver Failure Monitor is enabled.

T_HZ:
= 0: The Line Driver works normally.
= 1: Set the Line Driver High-Z. (The other parts of the transmit path still work normally.)

PULS[3:0]:
These bits determine the template shapes for short/long haul transmission:

PULS[3:0]	Operating Mode	Transmit Clock	Cable Impedance	Application
0000	Reserved			
0001				
0010	DSX1	1.544 MHz	100 Ω	0 - 133 ft
	J1	1.544 MHz	110 Ω	0 - 655 ft
	DS1	1.544 MHz	100 Ω	0 dB LBO
0011	DSX1	1.544 MHz	100 Ω	133 - 266 ft
0100	DSX1	1.544 MHz	100 Ω	266 - 399 ft
0101	DSX1	1.544 MHz	100 Ω	399 - 533 ft
0110	DSX1	1.544 MHz	100 Ω	533 - 655 ft
0111	Reserved			
1000				
1001	DS1	1.544 MHz	100 Ω	-7.5 dB LBO
1010	DS1	1.544 MHz	100 Ω	-15.0 dB LBO
1011	DS1	1.544 MHz	100 Ω	-22.5 dB LBO
11xx	Arbitrary waveform setting.			

T1/J1 Transmit Configuration 2 (024H, 124H, 224H, 324H)

Bit No.	7	6	5	4	3	2	1	0
Bit Name	Reserved		SCAL5	SCAL4	SCAL3	SCAL2	SCAL1	SCAL0
Type			R/W	R/W	R/W	R/W	R/W	R/W
Default			1	0	0	0	0	1

SCAL[5:0]:

The following setting lists the standard values of normal amplitude in different operating modes. Each step change (one increasing or decreasing from the standard value) will scale the amplitude of the D/A output by a certain offset. These bits are only effective when user programmable arbitrary waveform is used.

= 000100: Normal amplitude in T1 long haul LBO/-22.5 dB operating mode. Each step change scales about 25% offset.

= 001000: Normal amplitude in T1 long haul LBO/-15 dB operating mode. Each step change scales about 12.5% offset.

= 010001: Normal amplitude in T1 long haul LBO/-7.5 dB operating mode. Each step change scales about 6.25% offset.

= 110110: Normal amplitude in T1 0~133 ft, 133~266 ft, 266~399 ft, 399~533 ft, 533~655 ft, DS1 0 dB & J1 0~655 ft operating modes. Each step change scales about 2% offset.

T1/J1 Transmit Configuration 3 (025H, 125H, 225H, 325H)

Bit No.	7	6	5	4	3	2	1	0
Bit Name	DONE	RW	UI1	UI0	SAMP3	SAMP2	SAMP1	SAMP0
Type	R/W	R/W	R/W	R/W	R/W	R/W	R/W	R/W
Default	0	0	0	0	0	0	0	0

This register is valid when the PULS[3:0] bits (b3~0, T1/J1-023H,...) are set to '11xx'.

DONE:
= 0: Disable the read/write operation to the pulse template RAM.
= 1: Enable the read/write operation to the pulse template RAM.

RW:
= 0: Write the data to the pulse template RAM.
= 1: Read the data to the pulse template RAM.

UI[1:0]:
These bits specify one Unit Interval (UI) address.
= 00: UI addressed 0 is specified.
= 01: UI addressed 1 is specified.
= 10: UI addressed 2 is specified.
= 11: UI addressed 3 is specified.

SAMP[3:0]:
There bits specify one sample address. There are 16 samples in each UI.

SAMP[3:0]	Specified Sample Address	SAMP[3:0]	Specified Sample Address
0000	0	1000	8
0001	1	1001	9
0010	2	1010	10
0011	3	1011	11
0100	4	1100	12
0101	5	1101	13
0110	6	1110	14
0111	7	1111	15

T1/J1 Transmit Configuration 4 (026H, 126H, 226H, 326H)

Bit No.	7	6	5	4	3	2	1	0
Bit Name	Reserved	WDAT6	WDAT5	WDAT4	WDAT3	WDAT2	WDAT1	WDAT0
Type		R/W	R/W	R/W	R/W	R/W	R/W	R/W
Default		0	0	0	0	0	0	0

WDAT[6:0]:

These bits contain the data to be stored in the pulse template RAM which is addressed by the UI[1:0] bits (b5~4, T1/J1-025H,...) and the SAMP[3:0] bits (b3~0, T1/J1-025H,...).

T1/J1 Receive Jitter Attenuation Configuration (027H, 127H, 227H, 327H)

Bit No.	7	6	5	4	3	2	1	0
Bit Name	Reserved		RJITT_TEST	RJA_LIMT	RJA_E	RJA_DP1	RJA_DP0	RJA_BW
Type			R/W	R/W	R/W	R/W	R/W	R/W
Default			0	0	0	0	0	0

RJITT_TEST:

= 0: The real time interval between the read and write pointer of the FIFO is indicated in the RJITT[6:0] bits (b6~0, T1/J1-039H,...). That is, the current interval between the read and write pointer of the FIFO will be written into the RJITT[6:0] bits (b6~0, T1/J1-039H,...).

= 1: The peak-peak interval between the read and write pointer of the FIFO is indicated in the RJITT[6:0] bits (b6~0, T1/J1-039H,...). That is, the current interval is compared with the old one in the RJITT[6:0] bits (b6~0, T1/J1-039H,...) and the larger one will be indicated by the RJITT[6:0] bits (b6~0, T1/J1-039H,...); otherwise, the value in the RJITT[6:0] bits (b6~0, T1/J1-039H,...) will not be changed.

RJA_LIMT:

When the read and write pointer of the FIFO are within 2/3/4 bits (corresponding to the FIFO depth) of overflowing or underflowing, the bandwidth of the JA can be widened to track the short term input jitter, thereby avoiding data corruption. This bit selects whether the bandwidth is normal or widened.

= 0: Normal bandwidth is selected.

= 1: Widen bandwidth is selected. In this case, the JA will not attenuate the input jitter until the read/write pointer's position is outside the 2/3/4 bits window.

RJA_E:

= 0: Disable the Receive Jitter Attenuator.

= 1: Enable the Receive Jitter Attenuator.

RJA_DP[1:0]:

These two bits select the Jitter Attenuation Depth.

= 00: The Jitter Attenuation Depth is 128-bit.

= 01: The Jitter Attenuation Depth is 64-bit.

= 10 / 11: The Jitter Attenuation Depth is 32-bit.

RJA_BW:

This bit select the Jitter Transfer Function Bandwidth.

= 0: 5 Hz.

= 1: 1.26 Hz.

T1/J1 Receive Configuration 0 (028H, 128H, 228H, 328H)

Bit No.	7	6	5	4	3	2	1	0
Bit Name	Reserved			R_OFF	Reserved			R_MD
Type				R/W				R/W
Default				0				0

R_OFF:

= 0: The receive path is power up.

= 1: The receive path is power down.

R_MD:

This bit selects the line code rule to decode the received data stream.

= 0: The B8ZS decoder is selected.

= 1: The AMI decoder is selected.

T1/J1 Receive Configuration 1 (029H, 129H, 229H, 329H)

Bit No.	7	6	5	4	3	2	1	0
Bit Name	Reserved	EQ_ON	Reserved	LOS4	LOS3	LOS2	LOS1	LOS0
Type		R/W		R/W	R/W	R/W	R/W	R/W
Default		0		1	0	1	0	1

EQ_ON:

= 0: The Equalizer is off in short haul applications.

= 1: The Equalizer is on in long haul applications.

LOS[4:0]:

A LOS is detected when the incoming signals has “no transitions”, i.e., when the signal level is less than Q dB below nominal for N consecutive pulse intervals. In long haul applications, these bits select the LOS declare threshold (Q). These bits are invalid in short haul applications.

LOS[4:0]	LOS Declare Threshold (Q)	LOS[4:0]	LOS Declare Threshold (Q)
00000	-4 dB	01100	-28 dB
00001	-6 dB	01101	-30 dB
00010	-8 dB	01110	-32 dB
00011	-10 dB	01111	-34 dB
00100	-12 dB	10000	-36 dB
00101	-14 dB	10001	-38 dB
00110	-16 dB	10010	-40 dB
00111	-18 dB	10011	-42 dB
01000	-20 dB	10100	-44 dB
01001	-22 dB	10101	-46 dB
01010	-24 dB	10110 - 11111	-48 dB
01011	-26 dB		

T1/J1 Receive Configuration 2 (02AH, 12AH, 22AH, 32AH)

Bit No.	7	6	5	4	3	2	1	0
Bit Name	Reserved		SLICE1	SLICE0	UPDW1	UPDW0	MG1	MG0
Type			R/W	R/W	R/W	R/W	R/W	R/W
Default			0	1	1	0	0	0

SLICE[1:0]:

These two bits define the Data Slicer threshold.

= 00: The Data Slicer generates a mark if the voltage on the RTIPn/RRINGn pins exceeds 40% of the peak amplitude.

= 01: The Data Slicer generates a mark if the voltage on the RTIPn/RRINGn pins exceeds 50% of the peak amplitude.

= 10: The Data Slicer generates a mark if the voltage on the RTIPn/RRINGn pins exceeds 60% of the peak amplitude.

= 11: The Data Slicer generates a mark if the voltage on the RTIPn/RRINGn pins exceeds 70% of the peak amplitude.

UPDW[1:0]:

These two bits select the observation period, during which the peak value of the incoming signals is measured.

= 00: The observation period is 32 bits.

= 01: The observation period is 64 bits.

= 10: The observation period is 128 bits.

= 11: The observation period is 256 bits.

MG[1:0]:

These two bits select the Monitor Gain.

= 00: The Monitor Gain is 0 dB.

= 01: The Monitor Gain is 22 dB.

= 10: The Monitor Gain is 26 dB.

= 11: The Monitor Gain is 32 dB.

T1/J1 Maintenance Function Control 0 (02BH, 12BH, 22BH, 32BH)

Bit No.	7	6	5	4	3	2	1	0
Bit Name	Reserved	DLLP	SLLP	SRLP	Reserved	RLP	ALP	DLP
Type		R/W	R/W	R/W		R/W	R/W	R/W
Default		0	0	0		0	0	0

DLLP:
= 0: Disable the Local Digital Loopback 1.
= 1: Enable the Local Digital Loopback 1.

SLLP:
= 0: Disable the System Local Loopback.
= 1: Enable the System Local Loopback.

SRLP:
= 0: Disable the System Remote Loopback.
= 1: Enable the System Remote Loopback.

RLP:
= 0: Disable the Remote Loopback.
= 1: Enable the Remote Loopback.

ALP:
= 0: Disable the Analog Loopback.
= 1: Enable the Analog Loopback.

DLP:
= 0: Disable the Local Digital Loopback 2.
= 1: Enable the Local Digital Loopback 2.

T1/J1 Maintenance Function Control 1 (02CH, 12CH, 22CH, 32CH)

Bit No.	7	6	5	4	3	2	1	0
Bit Name	Reserved					LAC	RAISE	ATAO
Type						R/W	R/W	R/W
Default						0	0	0

LAC:

This bit selects the LOS criterion.

= 0: The T1.231 is selected. In short haul application, the LOS is declared when the incoming signal level is less than 800 mVpp for 175 consecutive bit intervals and is cleared when the incoming signal level is greater than 1 Vpp and has an average mark density of at least 12.5% and less than 100 consecutive zeros in 128 consecutive bit periods. In long haul application, the LOS is declared when the incoming signal level is less than Q dB below nominal (set in the LOS[4:0] bits (b4~0, T1/J1-029H,...)) for 175 consecutive bit intervals and is cleared when the incoming signal level is greater than (Q + 4 dB) and has an average mark density of at least 12.5% and less than 100 consecutive zeros in 128 consecutive bit periods.

= 1: The I.431 is selected. In short haul application, the LOS is declared when the incoming signal level is less than 800 mVpp for 1544 consecutive bit intervals and is cleared when the incoming signal level is greater than 1 Vpp and has an average mark density of at least 12.5% and less than 100 consecutive zeros in 128 consecutive bit periods. In long haul application, the LOS is declared when the incoming signal level is less than Q dB below nominal (set in the LOS[4:0] bits (b4~0, T1/J1-029H,...)) for 1544 consecutive bit intervals and is cleared when the incoming signal level is greater than (Q + 4 dB) and has an average mark density of at least 12.5% and less than 100 consecutive zeros in 128 consecutive bit periods.

RAISE:

This bit determines whether all ’One’s can be inserted in the receive path when the LOS is detected.

= 0: Disable the insertion.

= 1: Enable the insertion.

ATAO:

This bit determines whether all ’One’s can be inserted in the transmit path when the LOS is detected in the receive path.

= 0: Disable the insertion.

= 1: Enable the insertion.

T1/J1 Maintenance Function Control 2 (031H, 131H, 231H, 331H)

Bit No.	7	6	5	4	3	2	1	0
Bit Name	Reserved	BPV_INS	Reserved	EXZ_DEF	EXZ_ERR1	EXZ_ERR0	CNT_MD	CNT_TRF
Type		R/W		R/W	R/W	R/W	R/W	R/W
Default		0		0	0	0	0	0

BPV_INS:

A transition from ‘0’ to ‘1’ on this bit generates a single Bipolar Violation (BPV) Error to be inserted to the data stream to be transmitted.

This bit must be cleared and set again for the next BPV error insertion.

EXZ_DEF:

This bit selects the Excessive Zero (EXZ) Error criterion.

= 0: The ANSI is selected. In AMI line code rule, the EXZ error is defined as more than 15 consecutive zeros in the data stream. In B8ZS line code rule, the EXZ error is defined as more than 7 consecutive zeros in the data stream.

= 1: The FCC is selected. In AMI line code rule, the EXZ error is defined as more than 80 consecutive zeros in the data stream. In B8ZS line code rule, the EXZ error is defined as more than 7 consecutive zeros in the data stream.

EXZ_ERR[1:0]:

These bits must be set to ‘01’ to enable the Excessive Zero (EXZ) Error event to be counted in an internal 16-bit EXZ counter.

CNT_MD:

= 0: The Manual Report mode is selected. The internal 16-bit EXZ counter transfers its content to the EXZ Error Counter L-Byte & H-Byte registers when there is a transition from ‘0’ to ‘1’ on the CNT_TRF bit.

= 1: The Auto Report mode is selected. The internal 16-bit EXZ counter transfers its content to the EXZ Error Counter L-Byte & H-Byte registers every one second automatically.

CNT_TRF:

This bit is valid when the CNT_MD bit is ‘0’.

A transition from ‘0’ to ‘1’ on this bit updates the content in the EXZ Error Counter L-Byte & H-Byte registers with the value in the internal 16-bit EXZ counter.

This bit must be cleared and set again for the next updating.

T1/J1 Transmit And Receive Termination Configuration (032H, 132H, 232H, 332H)

Bit No.	7	6	5	4	3	2	1	0
Bit Name	Reserved		T_TERM2	T_TERM1	T_TERM0	R_TERM2	R_TERM1	R_TERM0
Type			R/W	R/W	R/W	R/W	R/W	R/W
Default			0	0	0	1	1	1

T_TERM[2:0]:

These bits select the internal impedance of the transmit path to match the cable impedance:
= 000: The 75 Ω internal impedance matching is selected.
= 001: The 120 Ω internal impedance matching is selected.
= 010: The 100 Ω internal impedance matching is selected. (It is the standard value for T1 mode).
= 011: The 110 Ω internal impedance matching is selected. (It is the standard value for J1 mode).
= 1xx: Reserved.
In T1/J1 mode, the external impedance circuit is not supported in transmit path.

R_TERM[2:0]:

These bits select the internal impedance of the receive path to match the cable impedance:
= 000: The 75 Ω internal impedance matching is selected.
= 001: The 120 Ω internal impedance matching is selected.
= 010: The 100 Ω internal impedance matching is selected. (It is the standard value for T1 mode).
= 011: The 110 Ω internal impedance matching is selected. (It is the standard value for J1 mode).
= 1xx: The internal impedance matching is bypassed, and external impedance circuit should be used.

T1/J1 Interrupt Enable Control 0 (033H, 133H, 233H, 333H)

Bit No.	7	6	5	4	3	2	1	0
Bit Name	Reserved					DF_IE	Reserved	LOS_IE
Type						R/W		R/W
Default						0		0

DF_IE:

= 0: Disable the interrupt on the $\overline{INT}$ pin when the DF_IS bit (b2, T1/J1-03AH,...) is ‘1’.
= 1: Enable the interrupt on the $\overline{INT}$ pin when the DF_IS bit (b2, T1/J1-03AH,...) is ‘1’.

LOS_IE:

= 0: Disable the interrupt on the $\overline{INT}$ pin when the LOS_IS bit (b0, T1/J1-03AH,...) is ‘1’.
= 1: Enable the interrupt on the $\overline{INT}$ pin when the LOS_IS bit (b0, T1/J1-03AH,...) is ‘1’.

T1/J1 Interrupt Enable Control 1 (034H, 134H, 234H, 334H)

Bit No.	7	6	5	4	3	2	1	0
Bit Name	Reserved	DAC_IE	TJA_IE	RJA_IE	Reserved	EXZ_IE	CV_IE	CNT_IE
Type		R/W	R/W	R/W		R/W	R/W	R/W
Default		0	0	0		0	0	0

DAC_IE:
= 0: Disable the interrupt on the $\overline{INT}$ pin when the DAC_IS bit (b6, T1/J1-03BH,...) is ‘1’.
= 1: Enable the interrupt on the $\overline{INT}$ pin when the DAC_IS bit (b6, T1/J1-03BH,...) is ‘1’.

TJA_IE:
= 0: Disable the interrupt on the $\overline{INT}$ pin when the TJA_IS bit (b5, T1/J1-03BH,...) is ‘1’.
= 1: Enable the interrupt on the $\overline{INT}$ pin when the TJA_IS bit (b5, T1/J1-03BH,...) is ‘1’.

RJA_IE:
= 0: Disable the interrupt on the $\overline{INT}$ pin when the RJA_IS bit (b4, T1/J1-03BH,...) is ‘1’.
= 1: Enable the interrupt on the $\overline{INT}$ pin when the RJA_IS bit (b4, T1/J1-03BH,...) is ‘1’.

EXZ_IE:
= 0: Disable the interrupt on the $\overline{INT}$ pin when the EXZ_IS bit (b2, T1/J1-03BH,...) is ‘1’.
= 1: Enable the interrupt on the $\overline{INT}$ pin when the EXZ_IS bit (b2, T1/J1-03BH,...) is ‘1’.

CV_IE:
= 0: Disable the interrupt on the $\overline{INT}$ pin when the CV_IS bit (b1, T1/J1-03BH,...) is ‘1’.
= 1: Enable the interrupt on the $\overline{INT}$ pin when the CV_IS bit (b1, T1/J1-03BH,...) is ‘1’.

CNT_IE:
= 0: Disable the interrupt on the $\overline{INT}$ pin when the CNTOV_IS bit (b0, T1/J1-03BH,...) is ‘1’.
= 1: Enable the interrupt on the $\overline{INT}$ pin when the CNTOV_IS bit (b0, T1/J1-03BH,...) is ‘1’.

T1/J1 Interrupt Trigger Edges Select (035H, 135H, 235H, 335H)

Bit No.	7	6	5	4	3	2	1	0
Bit Name	Reserved					DF_IES	Reserved	LOS_IES
Type						R/W		R/W
Default						0		0

DF_IES:

= 0: The DF_IS bit (b2, T1/J1-03AH,...) will be set to ‘1’ when there is a transition from ‘0’ to ‘1’ on the DF_S bit (b2, T1/J1-036H,...).

= 1: The DF_IS bit (b2, T1/J1-03AH,...) will be set to ‘1’ when there is any transition from ‘0’ to ‘1’ or from ‘1’ to ‘0’ on the DF_S bit (b2, T1/J1-036H,...).

LOS_IES:

= 0: The LOS_IS bit (b0, T1/J1-03AH,...) will be set to ‘1’ when there is a transition from ‘0’ to ‘1’ on the LOS_S bit (b0, T1/J1-036H,...).

= 1: The LOS_IS bit (b0, T1/J1-03AH,...) will be set to ‘1’ when there is any transition from ‘0’ to ‘1’ or from ‘1’ to ‘0’ on the LOS_S bit (b0, T1/J1-036H,...).

T1/J1 Line Status Register 0 (036H, 136H, 236H, 336H)

Bit No.	7	6	5	4	3	2	1	0
Bit Name	Reserved					DF_S	Reserved	LOS_S
Type						R		R
Default						0		0

DF_S:

= 0: No transmit driver failure is detected.

= 1: Transmit driver failure is detected.

LOS_S:

= 0: No LOS is detected.

= 1: Loss of signal (LOS) is detected.

T1/J1 Line Status Register 1 (037H, 137H, 237H, 337H)

Bit No.	7	6	5	4	3	2	1	0
Bit Name	Reserved			LATT4	LATT3	LATT2	LATT1	LATT0
Type				R	R	R	R	R
Default				0	0	0	0	0

LATT[4:0]:

These bits indicate the current gain of the VGA relative to 3 V peak pulse level.

LATT[4:0]	Gain (dB)	LATT[4:0]	Gain (dB)
00000	0 - 2	01011	22 - 24
00001	2 - 4	01100	24 - 26
00010	4 - 6	01101	26 - 28
00011	6 - 8	01110	28 - 30
00100	8 - 10	01111	30 - 32
00101	10 - 12	10000	32 - 34
00110	12 - 14	10001	34 - 36
00111	14 - 16	10010	36 - 38
01000	16 - 18	10011	38 - 40
01001	18 - 20	10100	40 - 42
01010	20 - 22	10101 ~ 11111	42 - 44

T1/J1 Transmit Jitter Measure Value Indication (038H, 138H, 238H, 338H)

Bit No.	7	6	5	4	3	2	1	0
Bit Name	Reserved	TJITT6	TJITT5	TJITT4	TJITT3	TJITT2	TJITT1	TJITT0
Type		R	R	R	R	R	R	R
Default		0	0	0	0	0	0	0

TJITT[6:0]:

When the TJITT_TEST bit (b5, T1/J1-021H,...) is ‘0’, these bits represent the current interval between the read and write pointer of the FIFO.

When the TJITT_TEST bit (b5, T1/J1-021H,...) is ‘1’, these bits represent the P-P interval between the read and write pointer of the FIFO since last read.

These bits will be cleared if a ’1’ is written to the register.

T1/J1 Receive Jitter Measure Value Indication (039H, 139H, 239H, 339H)

Bit No.	7	6	5	4	3	2	1	0
Bit Name	Reserved	RJITT6	RJITT5	RJITT4	RJITT3	RJITT2	RJITT1	RJITT0
Type		R	R	R	R	R	R	R
Default		0	0	0	0	0	0	0

RJITT[6:0]:

When the RJITT_TEST bit (b5, T1/J1-027H,...) is ‘0’, these bits represent the current interval between the read and write pointer of the FIFO.

When the RJITT_TEST bit (b5, T1/J1-027H,...) is ‘1’, these bits represent the P-P interval between the read and write pointer of the FIFO since last read.

These bits will be cleared if a ’1’ is written to the register.

T1/J1 Interrupt Status 0 (03AH, 13AH, 23AH, 33AH)

Bit No.	7	6	5	4	3	2	1	0
Bit Name	Reserved					DF_IS	Reserved	LOS_IS
Type						R		R
Default						0		0

DF_IS:

= 0: There is no status change on the DF_S bit (b2, T1/J1-036H,...).

= 1: When the DF_IES bit (b2, T1/J1-035H,...) is ‘0’, the ‘1’ on this bit indicates there is a transition from ‘0’ to ‘1’ on the DF_S bit (b2, T1/J1-036H,...); when the DF_IES bit (b2, T1/J1-035H,...) is ‘1’, the ‘1’ on this bit indicates there is a transition from ‘0’ to ‘1’ or from ‘1’ to ‘0’ on the DF_S bit (b2, T1/J1-036H,...).

This bit will be cleared if a ’1’ is written to it.

LOS_IS:

= 0: There is no status change on the LOS_S bit (b0, T1/J1-036H,...).

= 1: When the LOS_IES bit (b0, T1/J1-035H,...) is ‘0’, the ‘1’ on this bit indicates there is a transition from ‘0’ to ‘1’ on the LOS_S bit (b0, T1/J1-036H,...); when the LOS_IES bit (b0, T1/J1-035H,...) is ‘1’, the ‘1’ on this bit indicates there is a transition from ‘0’ to ‘1’ or from ‘1’ to ‘0’ on the LOS_S bit (b0, T1/J1-036H,...).

This bit will be cleared if a ’1’ is written to it.

T1/J1 Interrupt Status 1 (03BH, 13BH, 23BH, 33BH)

Bit No.	7	6	5	4	3	2	1	0
Bit Name	Reserved	DAC_IS	TJA_IS	RJA_IS	Reserved	EXZ_IS	CV_IS	CNTOV_IS
Type		R	R	R		R	R	R
Default		0	0	0		0	0	0

DAC_IS:

= 0: The sum of a pulse template does not exceed the D/A limitation (±63) when more than one UI is used to compose the arbitrary pulse template.

= 1: The sum of a pulse template exceeds the D/A limitation (±63) when more than one UI is used to compose the arbitrary pulse template.

This bit will be cleared if a ’1’ is written to it.

TJA_IS:

= 0: The transmit JA FIFO has not overflowed or underflowed.

= 1: The transmit JA FIFO has overflowed or underflowed.

This bit will be cleared if a ’1’ is written to it.

RJA_IS:

= 0: The receive JA FIFO has not overflowed or underflowed.

= 1: The receive JA FIFO has overflowed or underflowed.

This bit will be cleared if a ’1’ is written to it.

EXZ_IS:

= 0: No Excessive Zero (EXZ) Error is detected.

= 1: The Excessive Zero (EXZ) Error is detected.

This bit will be cleared if a ’1’ is written to it.

CV_IS:

= 0: No Bipolar Violation (BPV) Error is detected.

= 1: The Bipolar Violation (BPV) Error is detected.

This bit will be cleared if a ’1’ is written to it.

CNTOV_IS:

= 0: The internal 16-bit EXZ counter has not overflowed.

= 1: The internal 16-bit EXZ counter has overflowed.

This bit will be cleared if a ‘1’ is written to it.

T1/J1 EXZ Error Counter H-Byte (03CH, 13CH, 23CH, 33CH)

Bit No.	7	6	5	4	3	2	1	0
Bit Name	CNTH[7]	CNTH[6]	CNTH[5]	CNTH[4]	CNTH[3]	CNTH[2]	CNTH[1]	CNTH[0]
Type	R	R	R	R	R	R	R	R
Default	0	0	0	0	0	0	0	0

CNTH[7:0]:

These bits, together with the CNTL[7:0] bits, reflect the content in the internal 16-bit EXZ counter.

T1/J1 EXZ Error Counter L-Byte (03DH, 13DH, 23DH, 33DH)

Bit No.	7	6	5	4	3	2	1	0
Bit Name	CNTL[7]	CNTL[6]	CNTL[5]	CNTL[4]	CNTL[3]	CNTL[2]	CNTL[1]	CNTL[0]
Type	R	R	R	R	R	R	R	R
Default	0	0	0	0	0	0	0	0

CNTL[7:0]:

These bits, together with the CNTH[7:0] bits, reflect the content in the internal 16-bit EXZ counter.

T1/J1 Reference Clock Output Control (03EH, 13EH, 23EH, 33EH)

Bit No.	7	6	5	4	3	2	1	0
Bit Name	Reserved							REFH_LOS
Type								R/W
Default								0

REFH_LOS:

In case of LOS, this bit determines the outputs on the REFA_OUT and REFB_OUT pins.

= 0: Output MCLK.

= 1: Output high level.

T1/J1 Interrupt Module Indication 2 (03FH, 13FH, 23FH, 33FH)

Bit No.	7	6	5	4	3	2	1	0
Bit Name	Reserved							LIU
Type								R
Default								0

LIU:

= 0: No interrupt is generated in the Receive / Transmit Internal Termination, Adaptive Equalizer, Data Slicer, CLK&Data Recovery, Receive / Transmit Jitter Attenuator, B8ZS/HDB3/AMI Decoder / Encoder, Waveform Shaper / Line Build Out or Line Driver block.

= 1: Interrupt is generated in the Receive / Transmit Internal Termination, Adaptive Equalizer, Data Slicer, CLK&Data Recovery, Receive / Transmit Jitter Attenuator, B8ZS/HDB3/AMI Decoder / Encoder, Waveform Shaper / Line Build Out or Line Driver function block.

T1/J1 Interrupt Module Indication 0 (040H, 140H, 240H, 340H)

Bit No.	7	6	5	4	3	2	1	0
Bit Name	IBCD	RBOC	ALARM	PMON	PRGD	RCRB	FGEN	FRMR
Type	R	R	R	R	R	R	R	R
Default	0	0	0	0	0	0	0	0

IBCD:
= 0: No interrupt is generated in the Inband Loopback Code Detector function block.
= 1: Interrupt is generated in the Inband Loopback Code Detector function block.

RBOC:
= 0: No interrupt is generated in the Bit-Oriented Message Receiver function block.
= 1: Interrupt is generated in the Bit-Oriented Message Receiver function block.

ALARM:
= 0: No interrupt is generated in the Alarm Detector function block.
= 1: Interrupt is generated in the Alarm Detector function block.

PMON:
= 0: No interrupt is generated in the Performance Monitor function block.
= 1: Interrupt is generated in the Performance Monitor function block.

PRGD:
= 0: No interrupt is generated in the PRBS Generator / Detector function block.
= 1: Interrupt is generated in the PRBS Generator / Detector function block.

RCRB:
= 0: No interrupt is generated in the Receive CAS/RBS Buffer function block.
= 1: Interrupt is generated in the Receive CAS/RBS Buffer function block.

FGEN:
= 0: No interrupt is generated in the Frame Generator function block.
= 1: Interrupt is generated in the Frame Generator function block.

FRMR:
= 0: No interrupt is generated in the Frame Processor function block.
= 1: Interrupt is generated in the Frame Processor function block.

T1/J1 Interrupt Module Indication 1 (041H, 141H, 241H, 341H)

Bit No.	7	6	5	4	3	2	1	0
Bit Name	THDLC3	THDLC2	THDLC1	RHDLC3	RHDLC2	RHDLC1	ELST	TRSI/RESI
Type	R	R	R	R	R	R	R	R
Default	0	0	0	0	0	0	0	0

THDLC3:
= 0: No interrupt is generated in the HDLC Transmitter #3 function block.
= 1: Interrupt is generated in the HDLC Transmitter #3 function block.

THDLC2:
= 0: No interrupt is generated in the HDLC Transmitter #2 function block.
= 1: Interrupt is generated in the HDLC Transmitter #2 function block.

THDLC1:
= 0: No interrupt is generated in the HDLC Transmitter #1 function block.
= 1: Interrupt is generated in the HDLC Transmitter #1 function block.

RHDLC3:
= 0: No interrupt is generated in the HDLC Receiver #3 function block.
= 1: Interrupt is generated in the HDLC Receiver #3 function block.

RHDLC2:
= 0: No interrupt is generated in the HDLC Receiver #2 function block.
= 1: Interrupt is generated in the HDLC Receiver #2 function block.

RHDLC1:
= 0: No interrupt is generated in the HDLC Receiver #1 function block.
= 1: Interrupt is generated in the HDLC Receiver #1 function block.

ELST:
= 0: No interrupt is generated in the Elastic Store Buffer function block.
= 1: Interrupt is generated in the Elastic Store Buffer function block.

TRSI/RESI:
= 0: No interrupt is generated in the Transmit / Receive System Interface function block.
= 1: Interrupt is generated in the Transmit / Receive System Interface function block.

T1/J1 TBIF Option Register (042H, 142H, 242H, 342H)

Bit No.	7	6	5	4	3	2	1	0
Bit Name	Reserved		FBITGAP	DE	FE	CMS	FSINV	FSTYP
Type			R/W	R/W	R/W	R/W	R/W	R/W
Default			0	0	0	0	0	0

FBITGAP:

This bit is valid in Transmit Clock Master mode.

= 0: The F-bit is not gapped.

= 1: The F-bit is gapped (no clock signal during the F-bit).

DE:

This bit selects the active edge of TSCKn to sample the data on TSDn and TSIGn and the active edge of MTSCK to sample the data on MTSDA (MTSDB) and MTSIGA (MTSIGB).

= 0: The falling edge is selected.

= 1: The rising edge is selected.

In Transmit Multiplexed mode, the bit of the four links should be set to the same value.

FE:

This bit selects the active edge of TSCKn to update/sample the pulse on TSFSn and the active edge of MTSCK to sample the pulse on MTSFS.

= 0: The falling edge is selected.

= 1: The rising edge is selected.

In Transmit Multiplexed mode, the bit of the four links should be set to the same value.

CMS:

This bit is valid in Transmit Clock Slave T1/J1 mode E1 rate and Transmit Multiplexed mode.

= 0: The speed of the TSCKn / MTSCK is the same as the data rate on the system side (2.048 MHz / 8.192 MHz).

= 1: The speed of the TSCKn / MTSCK is double the data rate on the system side (4.096 MHz / 16.384 MHz).

In Transmit Clock Slave T1/J1 mode E1 rate, if all four links use the TSCK[1] and TSFS[1] to input the data (i.e., the TSLVCK bit (b, T1/J1-010H) is set to ‘1’), the bit of the four links should be set to the same value.

In Transmit Multiplexed mode, the bit of the four links should be set to the same value.

FSINV:

= 0: The transmit framing pulse TSFSn is active high.

= 1: The transmit framing pulse TSFSn is active low.

In Transmit Multiplexed mode, this bit of the four links should be set to the same value.

FSTYP:

= 0: In Transmit Non-multiplexed mode, TSFSn pulses during each F-bit. In Transmit Multiplexed mode, MTSFS pulses during each F-bit of the first link.

= 1: In Transmit Non-multiplexed mode, TSFSn pulses during the first F-bit of every SF/ESF/T1 DM/SLC-96 frame. In Transmit Multiplexed mode, MTSFS pulses during the first F-bit of every SF/ESF/T1 DM/SLC-96 frame of the first link.

In Transmit Multiplexed mode, this bit of the four links should be set to the same value.

T1/J1 TBIF Operating Mode (043H, 143H, 243H, 343H)

Bit No.	7	6	5	4	3	2	1	0
Bit Name	Reserved					MAP1	MAP0	TMODE
Type						R/W	R/W	R/W
Default						0	0	1

MAP[1:0]:

In Transmit Clock Slave mode and Transmit Multiplexed mode, these 2 bits select the T1/J1 to E1 format mapping schemes.

MAP[1:0]	T1/J1 To E1 Format Mapping Schemes
0 0 *	T1/J1 Rate
0 1	T1/J1 Mode E1 Rate per G.802
1 0	T1/J1 Mode E1 Rate per One Filler Every Four CHs
1 1	T1/J1 Mode E1 Rate per Continuous CHs

Note:
* These 2 bits can not be set to '00' in the Transmit Multiplexed mode.

TMODE:

In Transmit Non-multiplexed mode, this bit selects the sub-mode.

= 0: The Transmit System Interface is operated in Transmit Clock Master mode. The timing signal for clocking the data and the framing pulse to align the data input on the TSDn pin are provided from the processed data from the device.

= 1: The Transmit System Interface is operated in Transmit Clock Slave mode. The timing signal for clocking the data and the framing pulse to align the data input on the TSDn pin are provided by the system side.

T1/J1 TBIF TS Offset (044H, 144H, 244H, 344H)

Bit No.	7	6	5	4	3	2	1	0
Bit Name	Reserved	TSOFF6	TSOFF5	TSOFF4	TSOFF3	TSOFF2	TSOFF1	TSOFF0
Type		R/W	R/W	R/W	R/W	R/W	R/W	R/W
Default		0	0	0	0	0	0	0

TSOFF[6:0]:

These bits give a binary number to define the channel offset. The channel offset is between the framing pulse on the TSFSn/MTSFS pin and the start of the corresponding frame input on the TSDn/MTSDA(MTSDB) pin. The signaling bits on the TSIGn/MTSIGA(MTSIGB) pin are always per-channel aligned with the data on the TSDn/MTSDA(MTSDB) pin.

In Non-multiplexed mode, the channel offset can be configured from 0 to 23 channels (0 & 23 are included). In Multiplexed mode, the channel offset can be configured from 0 to 127 channels (0 & 127 are included).

T1/J1 TBIF Bit Offset (045H, 145H, 245H, 345H)

Bit No.	7	6	5	4	3	2	1	0
Bit Name	Reserved				EDGE	BOFF2	BOFF1	BOFF0
Type					R/W	R/W	R/W	R/W
Default					0	0	0	0

EDGE:

This bit is valid when the CMS bit (b2, T1/J1-042H,...) is ‘1’.

= 0: The first active edge of TSCKn/MTSCK is selected to sample the data on the TSDn/MTSDA(MTSDB) and TSIGn/MTSIGA(MTSIGB) pins.

= 1: The second active edge of TSCKn/MTSCK is selected to sample the data on the TSDn/MTSDA(MTSDB) and TSIGn/MTSIGA(MTSIGB) pins.

BOFF[2:0]:

These bits give a binary number to define the bit offset. The bit offset is between the framing pulse on the TSFSn/MTSFS pin and the start of the corresponding frame input on the TSDn/MTSDA(MTSDB) pin. The signaling bits on the TSIGn/MTSIGA(MTSIGB) pin are always per-channel aligned with the data on the TSDn/MTSDA(MTSDB) pin.

T1/J1 RBIF Option Register (046H, 146H, 246H, 346H)

Bit No.	7	6	5	4	3	2	1	0
Bit Name	Reserved			FBITGAP	DE	FE	CMS	TRI
Type				R/W	R/W	R/W	R/W	R/W
Default				0	1	1	0	1

FBITGAP:

This bit is valid in Receive Clock Master mode.

= 0: The F-bit is not gapped.

= 1: The F-bit is gapped (no clock signal during the F-bit).

DE:

This bit selects the active edge of RSCKn to update the data on RSDn and RSIGn and the active edge of MRSCK to update the data on MRSDA (MRSDB) and MRSIGA (MRSIGB).

= 0: The falling edge is selected.

= 1: The rising edge is selected.

In Receive Multiplexed mode, the bit of the four links should be set to the same value.

FE:

This bit selects the active edge of RSCKn to update/sample the pulse on RSFSn and the active edge of MRSCK to sample the pulse on MRSFS.

= 0: The falling edge is selected.

= 1: The rising edge is selected.

In Receive Multiplexed mode, the bit of the four links should be set to the same value.

CMS:

This bit is valid in Receive Clock Slave T1/J1 mode E1 rate and Receive Multiplexed mode.

= 0: The speed of the RSCKn/MRSCK is the same as the data rate on the system side (2.048 MHz / 8.192 MHz).

= 1: The speed of the RSCKn/MRSCK is double the data rate on the system side (4.096 MHz / 16.384 MHz).

In Receive Clock Slave T1/J1 mode E1 rate, if all four links use the RSCK[1] and RSFS[1] to output the data (i.e., the RSLVCK bit (b, T1/J1-010H) is set to ‘1’), the bit of the four links should be set to the same value.

In Receive Multiplexed mode, the bit of the four links should be set to the same value.

TRI:

= 0: The processed data and signaling bits are output on the RSDn/MRSDA(MRSDB) pins and the RSIGn/MRSIGA(MRSIGB) pins respectively.

= 1: The output on the RSDn/MRSDA(MRSDB) pins and the RSIGn/MRSIGA(MRSIGB) pins are in high impedance.

T1/J1 RBIF Mode (047H, 147H, 247H, 347H)

Bit No.	7	6	5	4	3	2	1	0
Bit Name	Reserved					MAP1	MAP0	RMODE
Type						R/W	R/W	R/W
Default						0	0	1

MAP[1:0]:

In Receive Clock Slave mode and Receive Multiplexed mode, these 2 bits select the T1/J1 to E1 format mapping schemes.

MAP[1:0]	T1/J1 To E1 Format Mapping Schemes
0 0 *	T1/J1 Rate
0 1	T1/J1 Mode E1 Rate per G.802
1 0	T1/J1 Mode E1 Rate per One Filler Every Four CHs
1 1	T1/J1 Mode E1 Rate per Continuous CHs
Note: * These 2 bits can not be set to '00' in the Receive Multiplexed mode.	

RMODE:

In Receive Non-multiplexed mode, this bit selects the sub-mode.

= 0: The Receive System Interface is operated in Receive Clock Master mode. The timing signal for clocking the data and the framing pulse to align the data output on the RSDn pin are received from each line side.

= 1: The Receive System Interface is operated in Receive Clock Slave mode. The timing signal for clocking the data and the framing pulse to align the data output on the RSDn pin are provided by the system side.

T1/J1 RBIF Frame Pulse (048H, 148H, 248H, 348H)

Bit No.	7	6	5	4	3	2	1	0
Bit Name	Reserved			FSINV	Reserved		CMFS	ALTFIS
Type				R/W			R/W	R/W
Default				0			0	0

FSINV:

= 0: The receive framing pulse RSFSn is active high.

= 1: The receive framing pulse RSFSn is active low.

In Receive Multiplexed mode, this bit of the four links should be set to the same value.

CMFS, ALTIFS:

In Receive Clock Master mode, these bits select what the pulse on RSFSn indicates. The ALTIFS bit is only valid in SF format.

Format	CMFS	ALTIFS	RSFSn Indication
SF	0	0	The RSFSn pulses during each F-bit.
	0	1	The RSFSn pulses during every second F-bit.
	1	0	The RSFSn pulses during the first F-bit of every SF frame.
	1	1	The RSFSn pulses during the first F-bit of every second SF frame.
ESF, T1DM, SLC-96	0	X	The RSFSn pulses during each F-bit.
	1	X	The RSFSn pulses during the first F-bit of every ESF/T1 DM/SLC-96 frame.

T1/J1 RBIF TS Offset (049H, 149H, 249H, 349H)

Bit No.	7	6	5	4	3	2	1	0
Bit Name	Reserved	TSOFF6	TSOFF5	TSOFF4	TSOFF3	TSOFF2	TSOFF1	TSOFF0
Type		R/W	R/W	R/W	R/W	R/W	R/W	R/W
Default		0	0	0	0	0	0	0

TSOFF[6:0]:

These bits give a binary number to define the channel offset. The channel offset is between the framing pulse on the RSFSn/MRSFS pin and the start of the corresponding frame output on the RSDn/MRSDA(MRSDB) pin. The signaling bits on the RSIGn/MRSIGA(MRSIGB) pin are always per-channel aligned with the data on the RSDn/MRSDA(MRSDB) pin.

In Non-multiplexed mode, the channel offset can be configured from 0 to 23 channels (0 & 23 are included). In Multiplexed mode, the channel offset can be configured from 0 to 127 channels (0 & 127 are included).

T1/J1 RBIF Bit Offset (04AH, 14AH, 24AH, 34AH)

Bit No.	7	6	5	4	3	2	1	0
Bit Name	Reserved				EDGE	BOFF2	BOFF1	BOFF0
Type					R/W	R/W	R/W	R/W
Default					0	0	0	0

EDGE:

This bit is valid when the CMS bit (b1, T1/J1-046H,...) is ‘1’.

= 0: The first active edge of RSCKn/MRSCK is selected to update the data on the RSDn/MRSDA(MRSDB) and RSIGn/MRSIGA(MRSIGB) pins.

= 1: The second active edge of RSCKn/MRSCK is selected to update the data on the RSDn/MRSDA(MRSDB) and RSIGn/MRSIGA(MRSIGB) pins.

BOFF[2:0]:

These bits give a binary number to define the bit offset. The bit offset is between the framing pulse on the RSFSn/MRSFS pin and the start of the corresponding frame output on the RSDn/MRSDA(MRSDB) pin. The signaling bits on the RSIGn/MRSIGA(MRSIGB) pin are always per-channel aligned with the data on the RSDn/MRSDA(MRSDB) pin.

T1/J1 RTSFS Change Indication (04BH, 14BH, 24BH, 34BH)

Bit No.	7	6	5	4	3	2	1	0
Bit Name	Reserved						RCOFAI	TCOFAI
Type							R	R
Default							0	0

RCOFAI:

This bit is valid in Receive Clock Slave mode and Receive Multiplexed mode.
= 0: The interval of the pulses on the RSFSn/MRSFS pin is an integer multiple of 125 μs.
= 1: The interval of the pulses on the RSFSn/MRSFS pin is not an integer multiple of 125 μs.
This bit will be cleared if a ‘1’ is written to it.

TCOFAI:

This bit is valid in Transmit Clock Slave mode and Transmit Multiplexed mode.
= 0: The interval of the pulses on the TSFSn/MTSFS pin is an integer multiple of 125 μs.
= 1: The interval of the pulses on the TSFSn/MTSFS pin is not an integer multiple of 125 μs.
This bit will be cleared if a ‘1’ is written to it.

T1/J1 RTSFS Interrupt Control (04CH, 14CH, 24CH, 34CH)

Bit No.	7	6	5	4	3	2	1	0
Bit Name	Reserved						RCOFAE	TCOFAE
Type							R/W	R/W
Default							0	0

RCOFAE:

= 0: Disable the interrupt on the $\overline{INT}$ pin when the RCOFAI bit (b1, T1/J1-04BH,...) is ‘1’.
= 1: Enable the interrupt on the $\overline{INT}$ pin when the RCOFAI bit (b1, T1/J1-04BH,...) is ‘1’.

TCOFAE:

= 0: Disable the interrupt on the $\overline{INT}$ pin when the TCOFAI bit (b0, T1/J1-04BH,...) is ‘1’.
= 1: Enable the interrupt on the $\overline{INT}$ pin when the TCOFAI bit (b0, T1/J1-04BH,...) is ‘1’.

T1/J1 FRMR Mode 0 (04DH, 14DH, 24DH, 34DH)

Bit No.	7	6	5	4	3	2	1	0
Bit Name	Reserved				UNFM	REFCRCE	REFEN	REFR
Type					R/W	R/W	R/W	R/W
Default					0	1	1	0

UNFM:

= 0: The data stream is received in framed mode and is processed by the Frame Processor.

= 1: The data stream is received in unframed mode and the Frame Processor is bypassed.

REFCRCE:

In ESF format:

= 0: Disable from re-searching for synchronization when the Excessive CRC-6 Error occurs.

= 1: Search for synchronization again when the Excessive CRC-6 Error occurs. This function can only be implemented only if the REFEN bit is logic 1.

REFEN:

= 0: “Locked in frame”. Once the previous frame synchronization is acquired, no errors can lead to reframe except for manually setting by the REFR bit.

= 1: Search for synchronization again when it is out of synchronization.

REFR:

A transition from logic 0 to logic 1 forces to re-search for a new SF, ESF, T1 DM frame.

T1/J1 FRMR Mode 1 (04EH, 14EH, 24EH, 34EH)

Bit No.	7	6	5	4	3	2	1	0
Bit Name	Reserved				DDSC	MIMICC	M2O1	M2O0
Type					R/W	R/W	R/W	R/W
Default					0	0	0	0

DDSC:

This bit selects the synchronization criteria of T1 DM format.

= 0: If a correct DDS pattern is received before the first F-bit of a single correct Frame Alignment Pattern and there is no mimic pattern, the T1 DM synchronization is acquired.

= 1: If a single correct Frame Alignment Pattern is received, and twelve correct DDS patterns before each F-bit of the correct Frame Alignment Pattern are all detected, and there is no mimic pattern, the T1 DM synchronization is acquired.

MIMICC:

This bit selects the synchronization criteria in SF format and ESF format.

In SF format:

= 0: When two consecutive Frame Alignment Patterns are received error free in the data stream, the SF is synchronized. In this case, the existence of mimic patterns is ignored.

= 1: When two consecutive Frame Alignment Patterns are received error free in the data stream without mimic pattern, the SF is synchronized.

In ESF format:

= 0: When a single correct Frame Alignment Pattern and a single correct CRC-6 are found in the same frame, the ESF is synchronized. In this case, the existence of mimic patterns is ignored.

= 1: When four consecutive Frame Alignment Patterns are detected error free in the received data stream without mimic pattern, the ESF is synchronized.

M2O[2:1]:

In SF format, these two bits define the threshold of the F Bit Error numbers in N-bit sliding F bits window. Exceeding the threshold will lead to out of synchronization.

In ESF format, these two bits define the threshold of the Frame Alignment Bit Error numbers in N-bit sliding Frame Alignment bits window. Exceeding the threshold will lead to out of synchronization.

In T1 DM format, these two bits define the threshold of the 7-bit pattern error numbers in N-pattern sliding 7-bit patterns window. The 7-bit pattern consists of the 6-bit DDS pattern and its following F-bit. Exceeding the threshold will lead to out of synchronization.

In SLC-96 format, these two bits define the threshold of the Ft bit error numbers in N-bit sliding Ft bits window or the Fs bit error numbers in N-bit sliding Fs bits in Frame (2n) (0<n<12 and n=36) window. Exceeding the threshold will lead to out of synchronization.

M2O[1:0]	Error Numbers	N-Bit/Pattern Sliding Window
0 0	2	4
0 1	2	5
1 0	2	6
1 1	Reserved	

T1/J1 FRMR Status (04FH, 14FH, 24FH, 34FH)

Bit No.	7	6	5	4	3	2	1	0
Bit Name	Reserved							OOFV
Type								R
Default								1

OOFV:

= 0: The SF/ESF/T1 DM/SLC-96 frame is in synchronization.

= 1: The frame is out of synchronization.

T1/J1 FRMR Interrupt Control 0 (050H, 150H, 250H, 350H)

Bit No.	7	6	5	4	3	2	1	0
Bit Name	Reserved							OOFE
Type								R/W
Default								0

OOFE:

= 0: Disable the interrupt on the $\overline{INT}$ pin when the OOFI bit (b0, T1/J1-052H,...) is ‘1’.

= 1: Enable the interrupt on the $\overline{INT}$ pin when the OOFI bit (b0, T1/J1-052H,...) is ‘1’.

T1/J1 FRMR Interrupt Control 1 (051H, 151H, 251H, 351H)

Bit No.	7	6	5	4	3	2	1	0
Bit Name	Reserved			RMFBE	SFEE	BEEE	FERE	COFAE
Type				R/W	R/W	R/W	R/W	R/W
Default				0	0	0	0	0

RMFBE:
= 0: Disable the interrupt on the $\overline{INT}$ pin when the RMFBI bit (b4, T1/J1-053H,...) is ‘1’.
= 1: Enable the interrupt on the $\overline{INT}$ pin when the RMFBI bit (b4, T1/J1-053H,...) is ‘1’.

SFEE:
= 0: Disable the interrupt on the $\overline{INT}$ pin when the SFEI bit (b3, T1/J1-053H,...) is ‘1’.
= 1: Enable the interrupt on the $\overline{INT}$ pin when the SFEI bit (b3, T1/J1-053H,...) is ‘1’.

BEEE:
= 0: Disable the interrupt on the $\overline{INT}$ pin when the BEEI bit (b2, T1/J1-053H,...) is ‘1’.
= 1: Enable the interrupt on the $\overline{INT}$ pin when the BEEI bit (b2, T1/J1-053H,...) is ‘1’.

FERE:
= 0: Disable the interrupt on the $\overline{INT}$ pin when the FERI bit (b1, T1/J1-053H,...) is ‘1’.
= 1: Enable the interrupt on the $\overline{INT}$ pin when the FERI bit (b1, T1/J1-053H,...) is ‘1’.

COFAE:
= 0: Disable the interrupt on the $\overline{INT}$ pin when the COFAI bit (b0, T1/J1-053H,...) is ‘1’.
= 1: Enable the interrupt on the $\overline{INT}$ pin when the COFAI bit (b0, T1/J1-053H,...) is ‘1’.

T1/J1 FRMR Interrupt Indication 0 (052H, 152H, 252H, 352H)

Bit No.	7	6	5	4	3	2	1	0
Bit Name	Reserved		EXCRCERI	MIMICI	Reserved			OOFI
Type			R	R				R
Default			0	0				0

EXCRCERI:

In ESF format, once the accumulated CRC-6 errors exceed 319 (>319) in a 1 second fixed window, an excessive CRC-6 error event is generated
= 0: No Excessive CRC-6 Error event is detected.
= 1: The Excessive CRC-6 Error event is detected.
This bit will be cleared if a ’1’ is written to it.

MIMICI:

This bit is valid in SF and ESF formats.
= 0: No mimic pattern is detected in the received data stream.
= 1: Mimic pattern is detected in the received data stream.
This bit will be cleared if a ’1’ is written to it.

OOFI:

= 0: There is no status change on the OOFV bit (b0, T1/J1-04FH,...).
= 1: There is a transition (from ‘0’ to ‘1’ or from ‘1’ to ‘0’) on the OOFV bit (b0, T1/J1-04FH,...).
This bit will be cleared if a ’1’ is written to it.

T1/J1 FRMR Interrupt Indication 1 (053H, 153H, 253H, 353H)

Bit No.	7	6	5	4	3	2	1	0
Bit Name	Reserved			RMFBI	SFEI	BEEI	FERI	COFAI
Type				R	R	R	R	R
Default				0	0	0	0	0

RMFBI:

= 0: The received bit is not the first bit of each SF/ESF/T1 DM/SLC-96 frame.

= 1: The first bit of each SF/ESF/T1 DM/SLC-96 frame is received.

This bit will be cleared if a '1' is written to it. This bit can not be updated during out of synchronization state.

SFEI:

In SF format, each received Ft bit is compared with the expected one (refer to Table 12). Each unmatched Ft bit leads to an Ft bit error event. When 2 or more Ft bit errors are detected in a 6-basic-frame fixed window, the severely Ft bit error occurs

= 0: No Severely Ft Bit Error event is detected.

= 1: The Severely Ft Bit Error event is detected.

In ESF format, when 2 or more frame alignment bit errors are detected in a 1-ESF-frame fixed window, the severely frame alignment bit error occurs.

= 0: No Severely Frame Alignment Bit Error event is detected.

= 1: The Severely Frame Alignment Bit Error event is detected.

In T1 DM format, each received Ft bit is compared with the expected one (refer to Table 14). Each unmatched Ft bit leads to an Ft bit error event. When 2 or more Ft bit errors are detected in a 6-basic-frame fixed window, the severely Ft bit error occurs.

= 0: No Severely Ft Bit Error event is detected.

= 1: The Severely Ft Bit Error event is detected.

This bit will be cleared if a '1' is written to it.

BEEI:

In ESF format, when the local calculated CRC-6 of the current received ESF frame does not match the received CRC-6 of the next received ESF frame, a single CRC-6 error event is generated

= 0: No CRC-6 Error event is detected.

= 1: The CRC-6 Error event is detected.

This bit will be cleared if a '1' is written to it.

FERI:

In SF format, each received F bit is compared with the expected one (refer to Table 12). Each unmatched F bit leads to an F bit error event.

= 0: No F Bit Error event is detected.

= 1: The F Bit Error event is detected.

In ESF format, each received Frame Alignment bit is compared with the expected one (refer to Table 13). Each unmatched bit leads to a frame alignment bit error event.

= 0: No Frame Alignment Bit Error event is detected.

= 1: The Frame Alignment Bit Error event is detected.

In T1 DM format, each received F bit is compared with the expected one (refer to Table 14). Each unmatched F bit leads to an F bit error event

= 0: No F Bit Error event is detected.

= 1: The F Bit Error event is detected.

In SLC-96 format, The Ft bit in each odd frame and the Fs bit in Frame (2n) ($0<n<12$ and $n=36$) is compared with the expected one (refer to Table 15). Each unmatched bit leads to a F-bit error event.

= 0: No F Bit Error event is detected.

= 1: The F Bit Error event is detected.

This bit will be cleared if a '1' is written to it.

COFAI:

= 0: The F bit position is not changed.

= 1: The new-found F bit position differs from the previous one.

This bit will be cleared if a '1' is written to it.

T1/J1 RDL0 (056H, 156H, 256H, 356H)

Bit No.	7	6	5	4	3	2	1	0
Bit Name	C8	C7	C6	C5	C4	C3	C2	C1
Type	R	R	R	R	R	R	R	R
Default	0	0	0	0	0	0	0	0

C[8:1]:

In SLC-96 format, these bits together with the C[11:9] bits reflect the content in the Concentrator bits. The C[1] bit is the LSB.

In de-bounce condition, these bits are updated if the received Concentrator bits are the same for 2 consecutive SLC-96 frames; otherwise they are updated every SLC-96 frame.

They are held during out of SLC-96 synchronization state.

T1/J1 RDL1 (057H, 157H, 257H, 357H)

Bit No.	7	6	5	4	3	2	1	0
Bit Name	Reserved		M3	M2	M1	C11	C10	C9
Type			R	R	R	R	R	R
Default			0	0	0	0	0	0

M[3:1]:

In SLC-96 format, these bits reflect the content in the Maintenance bits. The M[1] bit is the LSB.

In de-bounce condition, these bits are updated if the received Maintenance bits are the same for 2 consecutive SLC-96 frames; otherwise they are updated every SLC-96 frame.

They are held during out of SLC-96 synchronization state.

C[11:9]:

In SLC-96 format, these bits together with the C[8:1] bits reflect the content in the Concentrator bits. The C[11] bit is the MSB.

In de-bounce condition, these bits are updated if the received Concentrator bits are the same for 2 consecutive SLC-96 frames; otherwise they are updated every SLC-96 frame.

They are held during out of SLC-96 synchronization state.

T1/J1 RDL2 (058H, 158H, 258H, 358H)

Bit No.	7	6	5	4	3	2	1	0
Bit Name	Reserved		S4	S3	S2	S1	A2	A1
Type			R	R	R	R	R	R
Default			0	0	0	0	0	0

S[4:1]:

In SLC-96 format, these bits reflect the content in the Switch bits. The S[1] bit is the LSB.

In de-bounce condition, these bits are updated if the received Switch bits are the same for 2 consecutive SLC-96 frames; otherwise they are updated every SLC-96 frame.

They are held during out of SLC-96 synchronization state.

A[2:1]:

In SLC-96 format, these bits reflect the content in the Alarm bits. The A[1] bit is the LSB.

In de-bounce condition, these bits are updated if the received Alarm bits are the same for 2 consecutive SLC-96 frames; otherwise they are updated every SLC-96 frame.

They are held during out of SLC-96 synchronization state.

T1/J1 DLB Interrupt Control (05CH, 15CH, 25CH, 35CH)

Bit No.	7	6	5	4	3	2	1	0
Bit Name	Reserved			SCDEB	SCAE	SCSE	SCME	SCCE
Type				R/W	R/W	R/W	R/W	R/W
Default				0	0	0	0	0

SCDEB:
= 0: Disable the de-bounce function of the overhead extraction.
= 1: Enable the de-dounce function of the overhead extraction.

SCAE:
= 0: Disable the interrupt on the $\overline{INT}$ pin when the SCAI bit (b3, T1/J1-05DH,...) is ‘1’.
= 1: Enable the interrupt on the $\overline{INT}$ pin when the SCAI bit (b3, T1/J1-05DH,...) is ‘1’.

SCSE:
= 0: Disable the interrupt on the $\overline{INT}$ pin when the SCSI bit (b2, T1/J1-05DH,...) is ‘1’.
= 1: Enable the interrupt on the $\overline{INT}$ pin when the SCSI bit (b2, T1/J1-05DH,...) is ‘1’.

SCME:
= 0: Disable the interrupt on the $\overline{INT}$ pin when the SCMI bit (b1, T1/J1-05DH,...) is ‘1’.
= 1: Enable the interrupt on the $\overline{INT}$ pin when the SCMI bit (b1, T1/J1-05DH,...) is ‘1’.

SCCE:
= 0: Disable the interrupt on the $\overline{INT}$ pin when the SCCI bit (b0, T1/J1-05DH,...) is ‘1’.
= 1: Enable the interrupt on the $\overline{INT}$ pin when the SCCI bit (b0, T1/J1-05DH,...) is ‘1’.

T1/J1 DLB Interrupt Indication (05DH, 15DH, 25DH, 35DH)

Bit No.	7	6	5	4	3	2	1	0
Bit Name	Reserved				SCAI	SCSI	SCMI	SCCI
Type					R	R	R	R
Default					0	0	0	0

SCAI:
= 0: The value in the A[2:1] bits is not changed.
= 1: The value in the A[2:1] bits is changed.

SCSI:
= 0: The value in the S[4:1] bits is not changed.
= 1: The value in the S[4:1] bits is changed.

SCMI:
= 0: The value in the M[3:1] bits is not changed.
= 1: The value in the M[3:1] bits is changed.

SCCI:
= 0: The value in the C[11:1] bits is not changed.
= 1: The value in the C[11:1] bits is changed.

T1/J1 Mode (062H, 162H, 262H, 362H)

Bit No.	7	6	5	4	3	2	1	0
Bit Name	Reserved					FDLBYP	CRCBYP	FDIS
Type						R/W	R/W	R/W
Default						0	0	0

FDLBYP:

In ESF format, this bit is valid when the FDIS bit (b0, T1/J1-062H,...) is ‘0’.

= 0: Enable the DL bit position to be replaced by the Bit-Oriented Code, the Automatic Performance Report Message, the HDLC data or the idle code (‘FFFF’ for T1 / ‘FF7E’ for J1).

= 1: Disable the DL bit position to be replaced by the above codes.

In T1 DM format, this bit is valid when the FDIS bit (b0, T1/J1-062H,...) is ‘0’.

= 0: The ‘D’ bit in Bit 6 of each Channel 24 is replaced with the HDLC data.

= 1: Disable the D bit position to be replaced by the HDLC data.

In SLC-96 format, this bit is valid when the FDIS bit (b0, T1/J1-062H,...) is ‘0’.

= 0: The Concentrator (C) bit, the Maintenance (M) bit, the Alarm (A) bit and the Switch (S) bit are replaced by the contents in the C[11:1] bits (b2~0, T1/J1-066H,... & b7~0, T1/J1-065H,...), the M[3:1] bits (b5~3, T1/J1-066H,...), the A[2:1] bits (b1~0, T1/J1-067H,...) and the S[4:1] bits (b5~2, T1/J1-067H,...) respectively.

= 1: Disable the Concentrator (C) bit, the Maintenance (M) bit, the Alarm (A) bit and the Switch (S) bit replacement.

CRCBYP:

This bit is valid in ESF format when the FDIS bit (b0, T1/J1-062H,...) is ‘0’.

= 0: The calculated 6-bit CRC of the previous ESF frame is inserted in the current CRC-bit positions in every 4th frame starting with Frame 2 of the current ESF frame.

= 1: Disable the CRC-6 insertion.

FDIS:

= 0: Enable the generation of the SF / ESF / T1 DM / SLC-96 frame.

= 1: Disable the generation of the SF / ESF / T1 DM / SLC-96 frame.

T1/J1 XDL0 (065H, 165H, 265H, 365H)

Bit No.	7	6	5	4	3	2	1	0
Bit Name	C8	C7	C6	C5	C4	C3	C2	C1
Type	R	R	R	R	R	R	R	R
Default	0	0	0	0	0	0	0	0

C[8:1]:

These bits, together with the C[11:9] bits (b2~0, T1/J1-066H,...), are valid in SLC-96 format when the FDIS bit (b0, T1/J1-062H,...) and the FDL-BYP bit (b2, T1/J1-062H,...) are both '0's. They contain the data to replace the Concentrator (C) bit. The C[1] is the LSB and it is transmitted first.

T1/J1 XDL1 (066H, 166H, 266H, 366H)

Bit No.	7	6	5	4	3	2	1	0
Bit Name	Reserved		M3	M2	M1	C11	C10	C9
Type			R	R	R	R	R	R
Default			0	0	0	0	0	0

M[3:1]:

These bits are valid in SLC-96 format when the FDIS bit (b0, T1/J1-062H,...) and the FDLBYP bit (b2, T1/J1-062H,...) are both '0's. They contain the data to replace the Maintenance (M) bit. The M[1] is transmitted first.

C[11:9]:

These bits, together with the C[8:1] bits (b7~1, T1/J1-065H,...), are valid in SLC-96 format when the FDIS bit (b0, T1/J1-062H,...) and the FDL-BYP bit (b2, T1/J1-062H,...) are both '0's. They contain the data to replace the Concentrator (C) bit. The C[11] is the MSB and it is transmitted last.

T1/J1 XDL2 (067H, 167H, 267H, 367H)

Bit No.	7	6	5	4	3	2	1	0
Bit Name	Reserved		S4	S3	S2	S1	A2	A1
Type			R	R	R	R	R	R
Default			0	0	0	0	0	0

S[4:1]:

These bits are valid in SLC-96 format when the FDIS bit (b0, T1/J1-062H,...) and the FDLBYP bit (b2, T1/J1-062H,...) are both '0's. They contain the data to replace the Switch (S) bit. The S[1] is transmitted first.

A[2:1]:

These bits are valid in SLC-96 format when the FDIS bit (b0, T1/J1-062H,...) and the FDLBYP bit (b2, T1/J1-062H,...) are both '0's. They contain the data to replace the Alarm (A) bit. The A[1] is transmitted first.

T1/J1 FGEN Maintenance 0 (06BH, 16BH, 26BH, 36BH)

Bit No.	7	6	5	4	3	2	1	0
Bit Name	Reserved						AUTOYELLOW	XYEL
Type							R/W	R/W
Default							0	0

AUTOYELLOW:

= 0: Disable the automatic Yellow alarm signal insertion.

= 1: The Yellow alarm signal is automatically inserted into the data stream to be transmitted when Red alarm is declared in the received data stream.

XYEL:

= 0: Disable the manual Yellow alarm signal insertion.

= 1: The Yellow alarm signal is manually inserted into the data stream to be transmitted.

T1/J1 FGEN Maintenance 1 (06CH, 16CH, 26CH, 36CH)

Bit No.	7	6	5	4	3	2	1	0
Bit Name	Reserved				MIMICEN	COFAEN	TXDIS	TAIS
Type					R/W	R/W	R/W	R/W
Default					0	0	0	0

MIMICEN:

This bit is valid when the FDIS bit (b0, T1/J1-062H,...) is ‘0’.

= 0: Disable the mimic pattern insertion.

= 1: The mimic pattern is inserted into the bit right after each F-bit. The content of the mimic pattern is the same as the F-bit.

COFAEN:

Any transition (from ‘0’ to ‘1’ or from ‘1’ to ‘0’) on this bit will lead to one bit deletion or one bit repetition in the data stream to be transmitted, that is, to change the frame alignment position. The one bit deletion or repetition occurs randomly.

TXDIS:

= 0: Normal operation.

= 1: The data stream to be transmitted are overwritten with all ‘Zero’s.

TAIS:

= 0: Normal operation.

= 1: The data stream to be transmitted are overwritten with all ’One’s.

T1/J1 FGEN Interrupt Control (06DH, 16DH, 26DH, 36DH)

Bit No.	7	6	5	4	3	2	1	0
Bit Name	Reserved						MFE	BFE
Type							R/W	R/W
Default							0	0

MFE:

= 0: Disable the interrupt on the $\overline{INT}$ pin when the MFI bit (b1, T1/J1-06EH,...) is ‘1’.
= 1: Enable the interrupt on the $\overline{INT}$ pin when the MFI bit (b1, T1/J1-06EH,...) is ‘1’.

BFE:

= 0: Disable the interrupt on the $\overline{INT}$ pin when the BFI bit (b0, T1/J1-06EH,...) is ‘1’.
= 1: Enable the interrupt on the $\overline{INT}$ pin when the BFI bit (b0, T1/J1-06EH,...) is ‘1’.

T1/J1 FGEN Interrupt Indication (06EH, 16EH, 26EH, 36EH)

Bit No.	7	6	5	4	3	2	1	0
Bit Name	Reserved						MFI	BFI
Type							R	R
Default							0	0

MFI:

= 0: The bit input to the Frame Generator is not the first bit of each SF/ESF/T1 DM/SLC-96 multiframe.
= 1: The first bit of each SF/ESF/T1 DM/SLC-96 multiframe is input to the Frame Generator.
This bit will be cleared if a ’1’ is written to it.

BFI:

= 0: The bit input to the Frame Generator is not the first bit of each basic frame.
= 1: The first bit of each basic frame is input to the Frame Generator.
This bit will be cleared if a ’1’ is written to it.

T1/J1 Error Insertion (06FH, 16FH, 26FH, 36FH)

Bit No.	7	6	5	4	3	2	1	0
Bit Name	Reserved				DDSINV	CRCINV	FsINV	FtINV
Type					R/W	R/W	R/W	R/W
Default					0	0	0	0

DDSINV:

This bit is valid in T1 DM format when the FDIS bit (b0, T1/J1-062H,...) is ‘0’.
A transition from ‘0’ to ‘1’ on this bit wil invert one 6-bit DDS pattern.
This bit is cleared when the inversion is completed.

CRCINV:

This bit is valid in ESF format when the FDIS bit (b0, T1/J1-062H,...) is ‘0’.
A transition from ‘0’ to ‘1’ on this bit will invert one 6-bit CRC pattern.
This bit is cleared when the invertion is completed.

FsINV:

In SF, T1 DM formats, this bit is valid when the FDIS bit (b0, T1/J1-062H,...) is ‘0’.
A transition from ‘0’ to ‘1’ on this bit will invert one Fs bit (the F-bit in even frame).
In ESF format, this bit is valid when the FDIS bit (b0, T1/J1-062H,...) is ‘0’.
A transition from ‘0’ to ‘1’ on this bit will invert one Frame Alignment bit.
In SLC-96 format, this bit is valid when the FDIS bit (b0, T1/J1-062H,...) is ‘0’.
A transition from ‘0’ to ‘1’ on this bit will invert one Synchronization Fs bit.
This bit is cleared when the inversion is completed.

FtINV:

In SF, T1 DM, SLC-96 formats, this bit is valid when the FDIS bit (b0, T1/J1-062H,...) is ‘0’.
A transition from ‘0’ to ‘1’ on this bit will invert one Ft bit (the F-bit in odd frame).
This bit is cleared when the inversion is completed.

T1/J1 Transmit Timing Option (070H, 170H, 270H, 370H)

Bit No.	7	6	5	4	3	2	1	0
Bit Name	Reserved							XTS
Type								R/W
Default								0

XTS:

In Transmit Clock Master mode:

= 0: The source of the transmit clock is selected from the clock generated by the internal clock generator (1.544 MHz).

= 1: The source of the transmit clock is selected from the recovered clock from the line side.

In Transmit Clock Master mode, the Transmit Buffer is bypassed automatically.

In Transmit Clock Slave T1/J1 mode E1 rate, this bit is invalid. In the other Transmit Clock Slave modes and in Transmit Multiplexed mode:

= 0: The source of the transmit clock is selected from the clock from the backplane. The Transmit Buffer is bypassed.

= 1: The source of the transmit clock is selected from the clock generated by the internal clock generator (1.544 MHz). The Transmit Buffer is not bypassed.

T1/J1 PRGD Control (071H, 171H, 271H, 371H)

Bit No.	7	6	5	4	3	2	1	0
Bit Name	Reserved				RINV	TINV	PATS1	PATS0
Type					R/W	R/W	R/W	R/W
Default					0	0	0	0

RINV:

= 0: The data is not inverted before extracted to the pattern detector.

= 1: The data is inverted before extracted to the pattern detector.

TINV:

= 0: The generated pattern is not inverted.

= 1: The generated pattern is inverted.

PATS[1:0]:

These bits select the PRBS generated and detected pattern.

= 00: The 2^{15}-1 pattern per O.152 is selected.

= 01: The 2^{20}-1 pattern per O.150-4.5 is selected.

= 10: The 2^{11}-1 pattern per O.150 is selected.

= 11: Reserved.

T1/J1 PRGD Status/Error Control (072H, 172H, 272H, 372H)

Bit No.	7	6	5	4	3	2	1	0
Bit Name	Reserved				BERE	INV	SYNCV	SYNCE
Type					R/W	R/W	R	R/W
Default					0	0	0	0

BERE:
= 0: Disable the interrupt on the $\overline{INT}$ pin when the BERI bit (b3, T1/J1-073H,...) is ‘1’.
= 1: Enable the interrupt on the $\overline{INT}$ pin when the BERI bit (b3, T1/J1-073H,...) is ‘1’.

INV:
= 0: No bit error is inserted to the generated pattern.
= 1: A single bit error is inserted to the generated pattern.
This bit is cleared after the single bit error insertion is completed.

SYNCV:
= 0: The pattern is out of synchronization (the pattern detector has detected 10 or more bit errors in a fixed 48-bit window).
= 1: The pattern is in synchronization (the pattern detector has detected at least 48 consecutive error-free bit periods).

SYNCE:
= 0: Disable the interrupt on the $\overline{INT}$ pin when the SYNCI bit (b0, T1/J1-073H,...) is ‘1’.
= 1: Enable the interrupt on the $\overline{INT}$ pin when the SYNCI bit (b0, T1/J1-073H,...) is ‘1’.

T1/J1 PRGD Interrupt Indication (073H, 173H, 273H, 373H)

Bit No.	7	6	5	4	3	2	1	0
Bit Name	Reserved				BERI	Reserved		SYNCI
Type					R			R
Default					0			0

BERI:
= 0: No bit is mismatched with the PRGD pattern when the extracted data is in synchronization state.
= 1: At least one bit is mismatched with the PRGD pattern when the extracted data is in synchronization state.
This bit will be cleared if a ’1’ is written to it.

SYNCI:
= 0: There is no status change on the SYNCV bit (b1, T1/J1-072H,...).
= 1: There is a transition (from ‘0’ to ‘1’ or from ‘1’ to ‘0’) on the SYNCV bit (b1, T1/J1-072H,...).
This bit will be cleared if a ’1’ is written to it.

T1/J1 XIBC Control (074H, 174H, 274H, 374H)

Bit No.	7	6	5	4	3	2	1	0
Bit Name	Reserved				IBCDEN	IBCDUNFM	CL1	CL0
Type					R/W	R/W	R/W	R/W
Default					0	0	0	0

IBCDEN:

= 0: Disable transmitting the inband loopback code.

= 1: Enable transmitting the inband loopback code.

IBCDUNFM:

= 0: The inband loopback code is transmitted in framed mode, that is, the bits in all 24 channels are overwritten with the inband loopback code and the F-bit is not changed.

= 1: The inband loopback code is transmitted in unframed mode, that is, all the bits in 24 channels and the F-bit are overwritten with the inband loopback code.

CL[1:0]:

These 2 bits define the length of the inband loopback code to be transmitted, meanwhile, they define the valid code in the IBC[7:0] bits (b7~0, T1/J1-075H,...).

CL[1:0]	Loopback Code Length & Valid Code In The IBC[7:0]
0 0	5-bit length & the code in the IBC[7:3] is valid
0 1	6-bit length & the code in the IBC[7:2] is valid
1 0	7-bit length & the code in the IBC[7:1] is valid
1 1	8-bit length & the code in the IBC[7:0] is valid

T1/J1 XIBC Code (075H, 175H, 275H, 375H)

Bit No.	7	6	5	4	3	2	1	0
Bit Name	IBC7	IBC6	IBC5	IBC4	IBC3	IBC2	IBC1	IBC0
Type	R/W	R/W	R/W	R/W	R/W	R/W	R/W	R/W
Default	0	0	0	0	0	0	0	0

IBC[7:0]:

The IBC[7:X] bits define the content of the inband loopback code. The ‘X’ is one of 0 to 3 which depends on the length defined by the CL[1:0] bits (b1~0, T1/J1-074H,...). The IBC[7] is the MSB.

T1/J1 IBCD Detector Configuration (076H, 176H, 276H, 376H)

Bit No.	7	6	5	4	3	2	1	0
Bit Name	Reserved			IBCDIDLE	DSEL1	DSEL0	ASEL1	ASEL0
Type				R/W	R/W	R/W	R/W	R/W
Default				0	0	1	0	0

IBCDIDLE:

= 0: The F-bit is compared with the target activate/deactivate inband loopback code, but the result of the F-bit comparison is discarded.

= 1: The F-bit is skipped in the comparison process.

DSEL[1:0]:

These two bits define the length of the target deactivate inband loopback code, meanwhile, they define the valid code in the DACT[7:0] bits (b7~0, T1/J1-079H,...).

DSEL[1:0]	Deactivate Code Length & Valid Code In The DACT[7:0]
0 0	5-bit length & the code in the DACT[7:3] is valid
0 1	6-bit or 3-bit length & the code in the DACT[7:2] is valid
1 0	7-bit length & the code in the DACT[7:1] is valid
1 1	8-bit or 4-bit length & the code in the DACT[7:0] is valid

ASEL[1:0]:

These two bits define the length of the target activate inband loopback code, meanwhile, they define the valid code in the ACT[7:0] bits (b7~0, T1/J1-078H,...).

ASEL[1:0]	Activate Code Length & Valid Code In The ACT[7:0]
0 0	5-bit length & the code in the ACT[7:3] is valid
0 1	6-bit or 3-bit length & the code in the ACT[7:2] is valid
1 0	7-bit length & the code in the ACT[7:1] is valid
1 1	8-bit or 4-bit length & the code in the ACT[7:0] is valid

T1/J1 IBCD Detector Status (077H, 177H, 277H, 377H)

Bit No.	7	6	5	4	3	2	1	0
Bit Name	Reserved						LBA	LBD
Type							R	R
Default							0	0

LBA:

= 0: The activate code is loss. That is, more than 600 bits are not matched with the target activate inband loopback code in a 39.8ms fixed period.

= 1: The activate code is detected. That is, in more than 126 consecutive 39.8ms fixed periods, the target activate inband loopback code is matched with less than 600 bit errors in each 39.8ms.

LBD:

= 0: The deactivate code is loss. That is, more than 600 bits are not matched with the target deactivate inband loopback code in a 39.8ms fixed period.

= 1: The deactivate code is detected. That is, in more than 126 consecutive 39.8ms fixed periods, the target deactivate inband loopback code is matched with less than 600 bit errors in each 39.8ms.

T1/J1 IBCD Activate Code (078H, 178H, 278H, 378H)

Bit No.	7	6	5	4	3	2	1	0
Bit Name	ACT7	ACT6	ACT5	ACT4	ACT3	ACT2	ACT1	ACT0
Type	R/W	R/W	R/W	R/W	R/W	R/W	R/W	R/W
Default	0	0	0	0	1	0	0	0

ACT[7:0]:

The ACT[7:X] bits define the content of the target activate inband loopback code. The ‘X’ is 3, 2, 1 or 0 which depends on the definition by the ASEL[1:0] bits (b1~0, T1/J1-076H,...). The unused bits should be ignored. The ACT[7] bit is the MSB and compares with the first received code bit.

T1/J1 IBCD Deactivate Code (079H, 179H, 279H, 379H)

Bit No.	7	6	5	4	3	2	1	0
Bit Name	DACT7	DACT6	DACT5	DACT4	DACT3	DACT2	DACT1	DACT0
Type	R/W	R/W	R/W	R/W	R/W	R/W	R/W	R/W
Default	0	0	1	0	0	1	0	0

DACT[7:0]:

The DACT[7:X] bits define the content of the target deactivate inband loopback code. The ‘X’ is 3, 2, 1 or 0 which depends on the definition by the DSEL[1:0] bits (b3~2, T1/J1-076H,...). The unused bits should be ignored. The DACT[7] bit is the MSB and compares with the first received code bit.

T1/J1 IBCD Interrupt Control (07AH, 17AH, 27AH, 37AH)

Bit No.	7	6	5	4	3	2	1	0
Bit Name	Reserved						LBAE	LBDE
Type							R/W	R/W
Default							0	0

LBAE:
= 0: Disable the interrupt on the $\overline{INT}$ pin when the LBAI bit (b1, T1/J1-07BH,...) is ‘1’.
= 1: Enable the interrupt on the $\overline{INT}$ pin when the LBAI bit (b1, T1/J1-07BH,...) is ‘1’.

LBDE:
= 0: Disable the interrupt on the $\overline{INT}$ pin when the LBDI bit (b0, T1/J1-07BH,...) is ‘1’.
= 1: Enable the interrupt on the $\overline{INT}$ pin when the LBDI bit (b0, T1/J1-07BH,...) is ‘1’.

T1/J1 IBCD Interrupt Indication (07BH, 17BH, 27BH, 37BH)

Bit No.	7	6	5	4	3	2	1	0
Bit Name	Reserved						LBAI	LBDI
Type							R	R
Default							0	0

LBAI:
= 0: There is no status change on the LBA bit (b1, T1/J1-077H,...).
= 1: There is a transition (from ‘0’ to ‘1’ or from ‘1’ to ‘0’) on the LBA bit (b1, T1/J1-077H,...).
This bit will be cleared if a ’1’ is written to it.

LBDI:
= 0: There is no status change on the LBD bit (b0, T1/J1-077H,...).
= 1: There is a transition (from ‘0’ to ‘1’ or from ‘1’ to ‘0’) on the LBD bit (b0, T1/J1-077H,...).
This bit will be cleared if a ’1’ is written to it.

T1/J1 ELST Configuration (07CH, 17CH, 27CH, 37CH)

Bit No.	7	6	5	4	3	2	1	0
Bit Name	Reserved					TRKEN	SLIPD	SLIPE
Type						R/W	R	R/W
Default						0	0	0

TRKEN:

In Receive Clock Slave mode and Receive Multiplexed mode, if it is out of synchronization, the trunk code programmed in the TRKCODE[7:0] bits (b7~0, T1/J1-07EH,...) can be set to replace the data or not.

= 0: Disable the replacement.

= 1: Enable the replacement.

SLIPD:

This bit makes sense only when the SLIPI bit (b0, T1/J1-07DH,...) is ‘1’.

= 0: The latest slip is due to the Elastic Store Buffer being empty.

= 1: The latest slip is due to the Elastic Store Buffer being full.

SLIPE:

= 0: Disable the interrupt on the $\overline{INT}$ pin when the SLIPI bit (b0, T1/J1-07DH,...) is ‘1’.

= 1: Enable the interrupt on the $\overline{INT}$ pin when the SLIPI bit (b0, T1/J1-07DH,...) is ‘1’.

T1/J1 ELST Interrupt Indication (07DH, 17DH, 27DH, 37DH)

Bit No.	7	6	5	4	3	2	1	0
Bit Name	Reserved							SLIPI
Type								R
Default								0

SLIPI:

= 0: No slip occurs.

= 1: A slip occurs.

This bit will be cleared if a ’1’ is written to it.

T1/J1 ELST Trunk Code (07EH, 17EH, 27EH, 37EH)

Bit No.	7	6	5	4	3	2	1	0
Bit Name	TRKCODE7	TRKCODE6	TRKCODE5	TRKCODE4	TRKCODE3	TRKCODE2	TRKCODE1	TRKCODE0
Type	R/W	R/W	R/W	R/W	R/W	R/W	R/W	R/W
Default	1	1	1	1	1	1	1	1

TRKCODE[7:0]:

In Receive Clock Slave mode and Receive Multiplexed mode, if it is out of synchronization and the TRKEN bit (b2, T1/J1-07CH,...) is ‘1’, these bits are the trunk code to replace the received data stream.

T1/J1 APRM Control (07FH, 17FH, 27FH, 37FH)

Bit No.	7	6	5	4	3	2	1	0
Bit Name	Reserved		LBBIT	U2BIT	U1BIT	RBIT	CRBIT	AUTOPRM
Type			R/W	R/W	R/W	R/W	R/W	R/W
Default			0	0	0	0	0	0

LBBIT:

This bit is valid in ESF format when the AUTOPRM bit (b0, T1/J1-07FH,...) is ‘1’. The value in this bit will be transmitted in the LB bit position of the APRM.

U2BIT:

This bit is valid in ESF format when the AUTOPRM bit (b0, T1/J1-07FH,...) is ‘1’. The value in this bit will be transmitted in the U2 bit position of the APRM.

U1BIT:

This bit is valid in ESF format when the AUTOPRM bit (b0, T1/J1-07FH,...) is ‘1’. The value in this bit will be transmitted in the U1 bit position of the APRM.

RBIT:

This bit is valid in ESF format when the AUTOPRM bit (b0, T1/J1-07FH,...) is ‘1’. The value in this bit will be transmitted in the R bit position of the APRM.

CRBIT:

This bit is valid in ESF format when the AUTOPRM bit (b0, T1/J1-07FH,...) is ‘1’. The value in this bit will be transmitted in the CR bit position of the APRM.

AUTOPRM:

This bit is only valid in ESF format.

= 0: Disable the APRM transmission.

= 1: The Automatic Performance Report Message (APRM) is generated every one second and transmitted on the DL bit positions.

T1/J1 XBOC Code (080H, 180H, 280H, 380H)

Bit No.	7	6	5	4	3	2	1	0
Bit Name	Reserved		XBOC5	XBOC4	XBOC3	XBOC2	XBOC1	XBOC0
Type			R/W	R/W	R/W	R/W	R/W	R/W
Default			1	1	1	1	1	1

XBOC[5:0]:

These bits are only valid in the ESF format.

When the XBOC[5:0] bits are written with any 6-bit code other than the '111111', the code will be transmitted as the Bit Oriented Message (BOM). The BOM pattern is '111111110XBOC[0]XBOC[1]XBOC[2]XBOC[3]XBOC[4]XBOC[5]0' which occupies the DL of the F-bit position.

T1/J1 BOC Control (081H, 181H, 281H, 381H)

Bit No.	7	6	5	4	3	2	1	0
Bit Name	Reserved						AVC	BOCE
Type							R/W	R/W
Default							0	0

AVC:

This bit selects the validation criteria used to declare the Bit Oriented Message (BOM) in the received data stream. It is only valid in ESF format.

= 0: The BOM is declared when the pattern is matched and the received message is identical 8 out of 10 consecutive times and differs from the previous message.

= 1: The BOM is declared when the pattern is matched and the received message is identical 4 out of 5 consecutive times and differs from the previous message.

BOCE:

= 0: Disable the interrupt on the $\overline{INT}$ pin when the BOCI bit (b0, T1/J1-082H,...) is '1'.

= 1: Enable the interrupt on the $\overline{INT}$ pin when the BOCI bit (b0, T1/J1-082H,...) is '1'.

T1/J1 BOC Interrupt Indication (082H, 182H, 282H, 382H)

Bit No.	7	6	5	4	3	2	1	0
Bit Name	Reserved							BOCI
Type								R
Default								0

BOCI:

= 0: The BOC[5:0] bits (b5~0, T1/J1-083H,...) are not updated.

= 1: The BOC[5:0] bits (b5~0, T1/J1-083H,...) are updated.

This bit will be cleared if a '1' is written to it.

T1/J1 RBOC Code (083H, 183H, 283H, 383H)

Bit No.	7	6	5	4	3	2	1	0
Bit Name	Reserved		BOC5	BOC4	BOC3	BOC2	BOC1	BOC0
Type			R	R	R	R	R	R
Default			1	1	1	1	1	1

BOC[5:0]:

When the received BOM is declared, the message is loaded into these bits. The BOC[5] bit corresponds to the MSB of the message.

T1/J1 THDLC Enable Control (084H, 184H, 284H, 384H)

Bit No.	7	6	5	4	3	2	1	0
Bit Name	Reserved					TDLEN3	TDLEN2	TDLEN1
Type						R/W	R/W	R/W
Default						0	0	0

TDLEN3:
= 0: All the functions of the HDLC Transmitter #3 is disabled.
= 1: All the functions of the HDLC Transmitter #3 is enabled.

TDLEN2:
= 0: All the functions of the HDLC Transmitter #2 is disabled.
= 1: All the functions of the HDLC Transmitter #2 is enabled.

TDLEN1:
This bit is only valid in T1/J1 mode ESF & T1 DM formats.
= 0: All the functions of the HDLC Transmitter #1 is disabled.
= 1: All the functions of the HDLC Transmitter #1 is enabled.

T1/J1 THDLC2 Assignment (086H, 186H, 286H, 386H)

Bit No.	7	6	5	4	3	2	1	0
Bit Name	Reserved	EVEN	ODD	TS4	TS3	TS2	TS1	TS0
Type		R/W	R/W	R/W	R/W	R/W	R/W	R/W
Default		0	0	0	0	0	0	0

T1/J1 THDLC3 Assignment (087H, 187H, 287H, 387H)

Bit No.	7	6	5	4	3	2	1	0
Bit Name	Reserved	EVEN	ODD	TS4	TS3	TS2	TS1	TS0
Type		R/W	R/W	R/W	R/W	R/W	R/W	R/W
Default		0	0	0	0	0	0	0

The function of the above two sets of registers are the same. However, they correspond to different THDLC.

EVEN:
= 0: The data is not inserted to the even frames.
= 1: The data is inserted to the even frames.

ODD:
= 0: The data is not inserted to the odd frames.
= 1: The data is inserted to the odd frames.

TS[4:0]:
These bits binary define one channel of even and/or odd frames to insert the data to. ‘00000’ corresponds to CH 1 and ‘10111’ corresponds to CH 24. The value above ‘10111’ is meanless. These bits are invalid when the EVEN bit and the ODD bit are both ‘0’.

T1/J1 THDLC2 Bit Select (089H, 189H, 289H, 389H)

Bit No.	7	6	5	4	3	2	1	0
Bit Name	BITEN7	BITEN6	BITEN5	BITEN4	BITEN3	BITEN2	BITEN1	BITEN0
Type	R/W	R/W	R/W	R/W	R/W	R/W	R/W	R/W
Default	0	0	0	0	0	0	0	0

T1/J1 THDLC3 Bit Select (08AH, 18AH, 28AH, 38AH)

Bit No.	7	6	5	4	3	2	1	0
Bit Name	BITEN7	BITEN6	BITEN5	BITEN4	BITEN3	BITEN2	BITEN1	BITEN0
Type	R/W	R/W	R/W	R/W	R/W	R/W	R/W	R/W
Default	0	0	0	0	0	0	0	0

The function of the above two sets of registers are the same. However, they correspond to different THDLC.

BITENn:

= 0: The data is not inserted to the corresponding bit.
= 1: The data is inserted to the corresponding bit of the assigned channel.
These bits are invalid when the EVEN bit and the ODD bit are both logic 0.
The BITEN[7] bit corresponds to the first bit (MSB) of the selected channel.

T1/J1 RHDLC Enable Control (08BH, 18BH, 28BH, 38BH)

Bit No.	7	6	5	4	3	2	1	0
Bit Name	Reserved					RDLEN3	RDLEN2	RDLEN1
Type						R/W	R/W	R/W
Default						0	0	0

RDLEN3:
= 0: All the functions of the HDLC Receiver #3 is disabled.
= 1: All the functions of the HDLC Receiver #3 is enabled.

RDLEN2:
= 0: All the functions of the HDLC Receiver #2 is disabled.
= 1: All the functions of the HDLC Receiver #2 is enabled.

RDLEN1:
This bit is only valid in T1/J1 mode ESF & T1 DM formats.
= 0: All the functions of the HDLC Receiver #1 is disabled.
= 1: All the functions of the HDLC Receiver #1 is enabled.

T1/J1 RHDLC2 Assignment (08DH, 18DH, 28DH, 38DH)

Bit No.	7	6	5	4	3	2	1	0
Bit Name	Reserved	EVEN	ODD	TS4	TS3	TS2	TS1	TS0
Type		R/W	R/W	R/W	R/W	R/W	R/W	R/W
Default		0	0	0	0	0	0	0

T1/J1 RHDLC3 Assignment (08EH, 18EH, 28EH, 38EH)

Bit No.	7	6	5	4	3	2	1	0
Bit Name	Reserved	EVEN	ODD	TS4	TS3	TS2	TS1	TS0
Type		R/W	R/W	R/W	R/W	R/W	R/W	R/W
Default		0	0	0	0	0	0	0

The function of the above two sets of registers are the same. However, they correspond to different RHDLC.

EVEN:
= 0: The data is not extracted from the even frames.
= 1: The data is extracted from the even frames.

ODD:
= 0: The data is not extracted from the odd frames.
= 1: The data is extracted from the odd frames.

TS[4:0]:
These bits binary define one channel of even and/or odd frames to extract the data from. ‘00000’ corresponds to CH 1 and ‘10111’ corresponds to CH 24. The value above ‘10111’ is meanless. These bits are invalid when the EVEN bit and the ODD bit are both ‘0’.

T1/J1 RHDLC2 Bit Select (090H, 190H, 290H, 390H)

Bit No.	7	6	5	4	3	2	1	0
Bit Name	BITEN7	BITEN6	BITEN5	BITEN4	BITEN3	BITEN2	BITEN1	BITEN0
Type	R/W	R/W	R/W	R/W	R/W	R/W	R/W	R/W
Default	0	0	0	0	0	0	0	0

T1/J1 RHDLC3 Bit Select (091H, 191H, 291H, 391H)

Bit No.	7	6	5	4	3	2	1	0
Bit Name	BITEN7	BITEN6	BITEN5	BITEN4	BITEN3	BITEN2	BITEN1	BITEN0
Type	R/W	R/W	R/W	R/W	R/W	R/W	R/W	R/W
Default	0	0	0	0	0	0	0	0

The function of the above two sets of registers are the same. However, they correspond to different RHDLC.

BITENn:

= 0: The data is not extracted from the corresponding bit.
= 1: The data is extracted from the corresponding bit of the assigned channel.
These bits are invalid when the EVEN bit and the ODD bit are both logic 0.
The BITEN[7] bit corresponds to the first bit (MSB) of the selected channel.

T1/J1 RHDLC1 Control Register (092H, 192H, 292H, 392H)

Bit No.	7	6	5	4	3	2	1	0
Bit Name	Reserved		LSSUFIL	FISUFIL	ADRM1	ADRM0	RHDLCM	RRST
Type			R/W	R/W	R/W	R/W	R/W	R/W
Default			0	0	0	0	0	0

T1/J1 RHDLC2 Control Register (093H, 193H, 293H, 393H)

Bit No.	7	6	5	4	3	2	1	0
Bit Name	Reserved		LSSUFIL	FISUFIL	ADRM1	ADRM0	RHDLCM	RRST
Type			R/W	R/W	R/W	R/W	R/W	R/W
Default			0	0	0	0	0	0

T1/J1 RHDLC3 Control Register (094H, 194H, 294H, 394H)

Bit No.	7	6	5	4	3	2	1	0
Bit Name	Reserved		LSSUFIL	FISUFIL	ADRM1	ADRM0	RHDLCM	RRST
Type			R/W	R/W	R/W	R/W	R/W	R/W
Default			0	0	0	0	0	0

The function of the above three sets of registers are the same. However, they correspond to different RHDLC.

LSSUFIL:

This bit is valid when the SS7 packet is LSSU.
= 0: The current LSSU is not compared with the previous one.
= 1: The current LSSU is compared with the previous one. The current LSSU will be discarded if it is the same with the previous LSSU.

FISUFIL:

This bit is valid when the SS7 packet is FISU.
= 0: The current FISU is not compared with the previous one.
= 1: The current FISU is compared with the previous one. The current FISU will be discarded if it is the same with the previous FISU.

ADRM[1:0]:

These two bits select the address comparison mode in HDLC mode.
= 00: No address is compared.
= 01: High byte address is compared.
= 10: Low byte address is compared.
= 11: Both high byte address and low byte address are compared.

RHDLCM:

= 0: HDLC mode is selected.
= 1: SS7 mode is selected.

RRST:

A transition from ‘0’ to ‘1’ on this bit resets the corresponding HDLC Receiver. The reset will clear the FIFO, the PACK bit (b0, T1/J1-095H,... / 096H,... / 097H,...) and the EMP bit (b1, T1/J1-095H,... / 096H,... / 097H,...).

T1/J1 RHDLC1 RFIFO Access Status (095H, 195H, 295H, 395H)

Bit No.	7	6	5	4	3	2	1	0
Bit Name	Reserved						EMP	PACK
Type							R	R
Default							1	0

T1/J1 RHDLC2 RFIFO Access Status (096H, 196H, 296H, 396H)

Bit No.	7	6	5	4	3	2	1	0
Bit Name	Reserved						EMP	PACK
Type							R	R
Default							1	0

T1/J1 RHDLC3 RFIFO Access Status (097H, 197H, 297H, 397H)

Bit No.	7	6	5	4	3	2	1	0
Bit Name	Reserved						EMP	PACK
Type							R	R
Default							1	0

The function of the above three sets of registers are the same. However, they correspond to different RHDLC.

EMP:

= 0: All valid HDLC/SS7 blocks are pushed into the FIFO.
= 1: The FIFO is empty, i.e., all the blocks are read from the FIFO.
The corresponding HDLC Receiver reset will clear this bit.

PACK:

= 0: The byte read from the FIFO is not an overhead byte.
= 1: The byte read from the FIFO is an overhead byte.
The corresponding HDLC Receiver reset will clear this bit.

T1/J1 RHDLC1 Data (098H, 198H, 298H, 398H)

Bit No.	7	6	5	4	3	2	1	0
Bit Name	DAT7	DAT6	DAT5	DAT4	DAT3	DAT2	DAT1	DAT0
Type	R	R	R	R	R	R	R	R
Default	0	0	0	0	0	0	0	0

T1/J1 RHDLC2 Data (099H, 199H, 299H, 399H)

Bit No.	7	6	5	4	3	2	1	0
Bit Name	DAT7	DAT6	DAT5	DAT4	DAT3	DAT2	DAT1	DAT0
Type	R	R	R	R	R	R	R	R
Default	0	0	0	0	0	0	0	0

T1/J1 RHDLC3 Data (09AH, 19AH, 29AH, 39AH)

Bit No.	7	6	5	4	3	2	1	0
Bit Name	DAT7	DAT6	DAT5	DAT4	DAT3	DAT2	DAT1	DAT0
Type	R	R	R	R	R	R	R	R
Default	0	0	0	0	0	0	0	0

The function of the above three sets of registers are the same. However, they correspond to different RHDLC.

DAT[7:0]:

These bits represent the bytes read from the FIFO. The DAT[0] bit corresponds to the first bit of the serial received data from the FIFO.

T1/J1 RHDLC1 Interrupt Control (09BH, 19BH, 29BH, 39BH)

Bit No.	7	6	5	4	3	2	1	0
Bit Name	Reserved						OVFLE	RMBEE
Type							R/W	R/W
Default							0	0

T1/J1 RHDLC2 Interrupt Control (09CH, 19CH, 29CH, 39CH)

Bit No.	7	6	5	4	3	2	1	0
Bit Name	Reserved						OVFLE	RMBEE
Type							R/W	R/W
Default							0	0

T1/J1 RHDLC3 Interrupt Control (09DH, 19DH, 29DH, 39DH)

Bit No.	7	6	5	4	3	2	1	0
Bit Name	Reserved						OVFLE	RMBEE
Type							R/W	R/W
Default							0	0

The function of the above three sets of registers are the same. However, they correspond to different RHDLC.

OVFLE:

= 0: Disable the interrupt on the $\overline{INT}$ pin when the OVFLI bit (b1, T1/J1-09EH,... / 09FH,... / 0A0H,...) is ‘1’.

= 1: Enable the interrupt on the $\overline{INT}$ pin when the OVFLI bit (b1, T1/J1-09EH,... / 09FH,... / 0A0H,...) is ‘1’.

RMBEE:

= 0: Disable the interrupt on the $\overline{INT}$ pin when the RMBEI bit (b0, T1/J1-09EH,... / 09FH,... / 0A0H,...) is ‘1’.

= 1: Enable the interrupt on the $\overline{INT}$ pin when the RMBEI bit (b0, T1/J1-09EH,... / 09FH,... / 0A0H,...) is ‘1’.

T1/J1 RHDLC1 Interrupt Indication (09EH, 19EH, 29EH, 39EH)

Bit No.	7	6	5	4	3	2	1	0
Bit Name	Reserved						OVFLI	RMBEI
Type							R	R
Default							0	0

T1/J1 RHDLC2 Interrupt Indication (09FH, 19FH, 29FH, 39FH)

Bit No.	7	6	5	4	3	2	1	0
Bit Name	Reserved						OVFLI	RMBEI
Type							R	R
Default							0	0

T1/J1 RHDLC3 Interrupt Indication (0A0H, 1A0H, 2A0H, 3A0H)

Bit No.	7	6	5	4	3	2	1	0
Bit Name	Reserved						OVFLI	RMBEI
Type							R	R
Default							0	0

The function of the above three sets of registers are the same. However, they correspond to different RHDLC.

OVFLI:

The overwritten condition will occur if data is still attempted to write into the FIFO when the FIFO has already been full (128 bytes).
= 0: No overwriting occurs.
= 1: The overwriting occurs.
This bit will be cleared if a ’1’ is written to it.

RMBEI:

= 0: No block is pushed into the FIFO.
= 1: A block of the HDLC/SS7 packet is pushed into the FIFO.
This bit will be cleared if a ’1’ is written to it.

T1/J1 RHDLC1 High Address (0A1H, 1A1H, 2A1H, 3A1H)

Bit No.	7	6	5	4	3	2	1	0
Bit Name	HA7	HA6	HA5	HA4	HA3	HA2	HA1	HA0
Type	R/W	R/W	R/W	R/W	R/W	R/W	R/W	R/W
Default	0	0	0	0	0	0	0	0

T1/J1 RHDLC2 High Address (0A2H, 1A2H, 2A2H, 3A2H)

Bit No.	7	6	5	4	3	2	1	0
Bit Name	HA7	HA6	HA5	HA4	HA3	HA2	HA1	HA0
Type	R/W	R/W	R/W	R/W	R/W	R/W	R/W	R/W
Default	0	0	0	0	0	0	0	0

T1/J1 RHDLC3 High Address (0A3H, 1A3H, 2A3H, 3A3H)

Bit No.	7	6	5	4	3	2	1	0
Bit Name	HA7	HA6	HA5	HA4	HA3	HA2	HA1	HA0
Type	R/W	R/W	R/W	R/W	R/W	R/W	R/W	R/W
Default	0	0	0	0	0	0	0	0

The function of the above three sets of registers are the same. However, they correspond to different RHDLC.

HA[7:0]:

In HDLC mode, when high byte address comparison or both bytes address comparison is required, the high byte address position (the byte following the opening flag) is compared with the value in these bits, or with ‘0xFC’ or ‘0xFE’. The HA[1] bit (the ‘C/R’ bit position) is excluded to compare.

T1/J1 RHDLC1 Low Address (0A4H, 1A4H, 2A4H, 3A4H)

Bit No.	7	6	5	4	3	2	1	0
Bit Name	LA7	LA6	LA5	LA4	LA3	LA2	LA1	LA0
Type	R/W	R/W	R/W	R/W	R/W	R/W	R/W	R/W
Default	0	0	0	0	0	0	0	0

T1/J1 RHDLC2 Low Address (0A5H, 1A5H, 2A5H, 3A5H)

Bit No.	7	6	5	4	3	2	1	0
Bit Name	LA7	LA6	LA5	LA4	LA3	LA2	LA1	LA0
Type	R/W	R/W	R/W	R/W	R/W	R/W	R/W	R/W
Default	0	0	0	0	0	0	0	0

T1/J1 RHDLC3 Low Address (0A6H, 1A6H, 2A6H, 3A6H)

Bit No.	7	6	5	4	3	2	1	0
Bit Name	LA7	LA6	LA5	LA4	LA3	LA2	LA1	LA0
Type	R/W	R/W	R/W	R/W	R/W	R/W	R/W	R/W
Default	0	0	0	0	0	0	0	0

The function of the above three sets of registers are the same. However, they correspond to different RHDLC.

LA[7:0]:

In HDLC mode, when low byte address comparison is required, the high byte address position (the byte following the opening flag) is compared with the value in these bits. When both bytes address comparison is required, the low byte address position (the byte following the high byte address position) is compared with the value in these bits.

T1/J1 THDLC1 Control (0A7H, 1A7H, 2A7H, 3A7H)

Bit No.	7	6	5	4	3	2	1	0
Bit Name	Reserved		AUTOFISU	EOM	XREP	ABORT	THDLCM	TRST
Type			R/W	R/W	R/W	R/W	R/W	R/W
Default			0	0	0	0	0	0

T1/J1 THDLC2 Control (0A8H, 1A8H, 2A8H, 3A8H)

Bit No.	7	6	5	4	3	2	1	0
Bit Name	Reserved		AUTOFISU	EOM	XREP	ABORT	THDLCM	TRST
Type			R/W	R/W	R/W	R/W	R/W	R/W
Default			0	0	0	0	0	0

T1/J1 THDLC3 Control (0A9H, 1A9H, 2A9H, 3A9H)

Bit No.	7	6	5	4	3	2	1	0
Bit Name	Reserved		AUTOFISU	EOM	XREP	ABORT	THDLCM	TRST
Type			R/W	R/W	R/W	R/W	R/W	R/W
Default			0	0	0	0	0	0

The function of the above three sets of registers are the same. However, they correspond to different THDLC.

AUTOFISU:

This bit is valid in SS7 mode when there is no data in the FIFO to be transmitted.

= 0: Normal operation.

= 1: The 7E (Hex) flags is transmitted N times (the 'N' is determined by the FL[1:0] bits (b5~4, T1/J1-0AAH,... / 0ABH,... / 0ACH,...)), then the FISU packet is transmitted with the BSN and FSN the same with the last transmitted packet.

EOM:

A transition from '0' to '1' on this bit indicates an entire HDLC/SS7 packet is stored in the FIFO and starts the packet transmission.

XREP:

In SS7 mode, when the FIFO is empty, if less than 16 bytes are written into the FIFO, these bytes can be transmitted repeatedly with the opening flag, FCS and closing flag. This bit determines if this cyclic transmission can be implemented.

= 0: Disable the cyclic transmission.

= 1: Enable the cyclic transmission.

ABORT:

= 0: Disable the manual abort sequence insertion.

= 1: The abort sequence ('01111111') is manually inserted to the current HDLC/SS7 packet.

This bit is self-cleared after the abortion.

THDLCM:

= 0: HDLC mode is selected.

= 1: SS7 mode is selected.

TRST:

A transition from ‘0’ to ‘1’ on the this bit resets the corresponding HDLC Transmitter. The reset will clear the FIFO.

T1/J1 TFIFO1 Threshold (0AAH, 1AAH, 2AAH, 3AAH)

Bit No.	7	6	5	4	3	2	1	0
Bit Name	Reserved		FL1	FL0	LL1	LL0	HL1	HL0
Type			R/W	R/W	R/W	R/W	R/W	R/W
Default			1	0	0	0	0	1

T1/J1 TFIFO2 Threshold (0ABH, 1ABH, 2ABH, 3ABH)

Bit No.	7	6	5	4	3	2	1	0
Bit Name	Reserved		FL1	FL0	LL1	LL0	HL1	HL0
Type			R/W	R/W	R/W	R/W	R/W	R/W
Default			1	0	0	0	0	1

T1/J1 TFIFO3 Threshold (0ACH, 1ACH, 2ACH, 3ACH)

Bit No.	7	6	5	4	3	2	1	0
Bit Name	Reserved		FL1	FL0	LL1	LL0	HL1	HL0
Type			R/W	R/W	R/W	R/W	R/W	R/W
Default			1	0	0	0	0	1

The function of the above three sets of registers are the same. However, they correspond to different THDLC.

FL[1:0]:

These bits are valid in SS7 mode when there is no data in the FIFO to be transmitted and the AUTOFISU bit (b5, T1/J1-0A7H,... / 0A8H,... / 0A9H,...) is ‘1’. They define how many times the 7E (Hex) flags are transmitted before the FISU packet transmission.

= 00: 8 flags
= 01: 16 flags
= 10: 32 flags
= 11: 64 flags

LL[1:0]:

These 2 bits set the lower threshold of the FIFO. If the fill level is below the lower threshold, an interrupt may be generated.

= 00: 16 bytes
= 01: 32 bytes
= 10: 64 bytes
= 11: 96 bytes

HL[1:0]:

These 2 bits set the upper threshold of the FIFO. Once the fill level exceeds the upper threshold, the data stored in the FIFO will start to be transmitted.

= 00: 16 bytes
= 01: 32 bytes
= 10: 64 bytes
= 11: 128 bytes

T1/J1 THDLC1 Data (0ADH, 1ADH, 2ADH, 3ADH)

Bit No.	7	6	5	4	3	2	1	0
Bit Name	DAT7	DAT6	DAT5	DAT4	DAT3	DAT2	DAT1	DAT0
Type	R/W	R/W	R/W	R/W	R/W	R/W	R/W	R/W
Default	0	0	0	0	0	0	0	0

T1/J1 THDLC2 Data (0AEH, 1AEH, 2AEH, 3AEH)

Bit No.	7	6	5	4	3	2	1	0
Bit Name	DAT7	DAT6	DAT5	DAT4	DAT3	DAT2	DAT1	DAT0
Type	R/W	R/W	R/W	R/W	R/W	R/W	R/W	R/W
Default	0	0	0	0	0	0	0	0

T1/J1 THDLC3 Data (0AFH, 1AFH, 2AFH, 3AFH)

Bit No.	7	6	5	4	3	2	1	0
Bit Name	DAT7	DAT6	DAT5	DAT4	DAT3	DAT2	DAT1	DAT0
Type	R/W	R/W	R/W	R/W	R/W	R/W	R/W	R/W
Default	0	0	0	0	0	0	0	0

The function of the above three sets of registers are the same. However, they correspond to different THDLC.

DAT[7:0]:

The bytes to be stored in the FIFO. The DAT[0] bit corresponds to the first bit of the serial data in the FIFO to be transmitted.

T1/J1 TFIFO1 Status (0B0H, 1B0H, 2B0H, 3B0H)

Bit No.	7	6	5	4	3	2	1	0
Bit Name	Reserved					FUL	EMP	RDY
Type						R	R	R
Default						0	1	1

T1/J1 TFIFO2 Status (0B1H, 1B1H, 2B1H, 3B1H)

Bit No.	7	6	5	4	3	2	1	0
Bit Name	Reserved					FUL	EMP	RDY
Type						R	R	R
Default						0	1	1

T1/J1 TFIFO3 Status (0B2H, 1B2H, 2B2H, 3B2H)

Bit No.	7	6	5	4	3	2	1	0
Bit Name	Reserved					FUL	EMP	RDY
Type						R	R	R
Default						0	1	1

The function of the above three sets of registers are the same. However, they correspond to different THDLC.

FUL:
= 0: The FIFO is not full.
= 1: The FIFO is full of 128 bytes.

EMP:
= 0: The FIFO is not empty.
= 1: The FIFO is empty.

RDY:
= 0: The fill level of the FIFO is not below the lower threshold set by the LL[1:0] bits (b3~2, T1/J1-0AAH,... / 0ABH,... / 0ACH,...).
= 1: The fill level of the FIFO is below the lower threshold set by the LL[1:0] bits (b3~2, T1/J1-0AAH,... / 0ABH,... / 0ACH,...).

T1/J1 THDLC1 Interrupt Control (0B3H, 1B3H, 2B3H, 3B3H)

Bit No.	7	6	5	4	3	2	1	0
Bit Name	Reserved						UDRUNE	RDYE
Type							R/W	R/W
Default							0	0

T1/J1 THDLC2 Interrupt Control (0B4H, 1B4H, 2B4H, 3B4H)

Bit No.	7	6	5	4	3	2	1	0
Bit Name	Reserved						UDRUNE	RDYE
Type							R/W	R/W
Default							0	0

T1/J1 THDLC3 Interrupt Control (0B5H, 1B5H, 2B5H, 3B5H)

Bit No.	7	6	5	4	3	2	1	0
Bit Name	Reserved						UDRUNE	RDYE
Type							R/W	R/W
Default							0	0

The function of the above three sets of registers are the same. However, they correspond to different THDLC.

UDRUNE:

= 0: Disable the interrupt on the $\overline{INT}$ pin when the UDRUNI bit (b1, T1/J1-0B6H,... / 0B7H,... / 0B8H,...) is ‘1’.

= 1: Enable the interrupt on the $\overline{INT}$ pin when the UDRUNI bit (b1, T1/J1-0B6H,... / 0B7H,... / 0B8H,...) is ‘1’.

RDYE:

= 0: Disable the interrupt on the $\overline{INT}$ pin when the RDYI bit (b0, T1/J1-0B6H,... / 0B7H,... / 0B8H,...) is ‘1’.

= 1: Enable the interrupt on the $\overline{INT}$ pin when the RDYI bit (b0, T1/J1-0B6H,... / 0B7H,... / 0B8H,...) is ‘1’.

T1/J1 THDLC1 Interrupt Indication (0B6H, 1B6H, 2B6H, 3B6H)

Bit No.	7	6	5	4	3	2	1	0
Bit Name	Reserved						UDRUNI	RDYI
Type							R	R
Default							0	0

T1/J1 THDLC2 Interrupt Indication (0B7H, 1B7H, 2B7H, 3B7H)

Bit No.	7	6	5	4	3	2	1	0
Bit Name	Reserved						UDRUNI	RDYI
Type							R	R
Default							0	0

T1/J1 THDLC3 Interrupt Indication (0B8H, 1B8H, 2B8H, 3B8H)

Bit No.	7	6	5	4	3	2	1	0
Bit Name	Reserved						UDRUNI	RDYI
Type							R	R
Default							0	0

The function of the above three sets of registers are the same. However, they correspond to different THDLC.

UDRUNI:

When the FIFO is empty and the last transmitted byte is not the end of the current HDLC/SS7 packet, the under-run occurs. This bit indicates whether the under-run occurs.

= 0: No under-run occurs.

= 1: Under-run occurs.

This bit will be cleared if a ’1’ is written to it.

RDYI:

= 0: There is no status change on the RDY bit (b0, T1/J1-0B0H,... / 0B1H,... / 0B2H,...).

= 1: There is a transition (from ‘0’ to ‘1’) on the RDY bit (b0, T1/J1-0B0H,... / 0B1H,... / 0B2H,...).

This bit will be cleared if a ’1’ is written to it.

T1/J1 Alarm Status (0B9H, 1B9H, 2B9H, 3B9H)

Bit No.	7	6	5	4	3	2	1	0
Bit Name	Reserved					AIS	YEL	RED
Type						R	R	R
Default						0	0	0

AIS:

= 0: More than 60 zeros are detected in a 40ms fixed window and this status persists for Mx40ms. Here ‘M’ is decided by the AISCTH[7:0] bits (b7~0, T1/J1-0C1H,...).

= 1: Less than 61 zeros are detected in a 40ms fixed window and this status persists for Nx40ms. Here ‘N’ is decided by the AISDTH[7:0] bits (b7~0, T1/J1-0C0H,...).

YEL:

The Yellow Alarm is detected when the frame is synchronized.

In T1 SF / SLC-96 format:

= 0: More than 76 ’One’s are detected on the Bit 2 of each channel during a 40ms fixed window and this status persists for Mx40ms. Here ‘M’ is decided by the YELCTH[7:0] bits (b7~0, T1/J1-0BFH,...).

= 1: Less than 77 ’One’s are detected on the Bit 2 of each channel during a 40ms fixed window and this status persists for Nx40ms. Here ‘N’ is decided by the YELDTH[7:0] bits (b7~0, T1/J1-0BEH,...).

In T1 ESF format:

= 0: Less than 8 ‘0xFF00’ (MSB first) are detected on the DL bits during a 40ms fixed window and this status persists for Mx40ms. Here ‘M’ is decided by the YELCTH[7:0] bits (b7~0, T1/J1-0BFH,...).

= 1: More than 7 ‘0xFF00’ (MSB first) are detected on the DL bits during a 40ms fixed window and this status persists for Nx40ms. Here ‘N’ is decided by the YELDTH[7:0] bits (b7~0, T1/J1-0BEH,...).

In T1 DM format:

= 0: More than 3 ’One’s are detected on the Y bit (Bit 6 in each CH 24) during a 40ms fixed window and this status persists for Mx40ms. Here ‘M’ is decided by the YELCTH[7:0] bits (b7~0, T1/J1-0BFH,...).

= 1: Less than 4 ’One’s are detected on the Y bit (Bit 6 in each CH 24) during a 40ms fixed window and this status persists for Nx40ms. Here ‘N’ is decided by the YELDTH[7:0] bits (b7~0, T1/J1-0BEH,...).

In J1 SF format:

= 0: More than 3 zeros are detected on the F-bit of the 12nd frame during a 40ms fixed window and this status persists for Mx40ms. Here ‘M’ is decided by the YELCTH[7:0] bits (b7~0, T1/J1-0BFH,...).

= 1: Less than 4 zeros are detected on the F-bit of the 12nd frame during a 40ms fixed window and this status persists for Nx40ms. Here ‘N’ is decided by the YELDTH[7:0] bits (b7~0, T1/J1-0BEH,...).

In J1 ESF format:

= 0: More than 2 zeros are detected on the DL bits during a 40 ms fixed window and this status persists for Mx40 ms. Here ‘M’ is decided by the YELCTH[7:0] bits (b7~0, T1/J1-0BFH,...).

= 1: Less than 3 zeros are detected on the DL bits during a 40 ms fixed window and this status persists for Nx40 ms. Here ‘N’ is decided by the YELDTH[7:0] bits (b7~0, T1/J1-0BEH,...).

RED:

= 0: The in SF / ESF / T1 DM / SLC-96 synchronization status persists for Mx120ms. Here ‘M’ is decided by the REDCTH[7:0] bits (b7~0, T1/J1-0BDH,...).

= 1: The out of SF / ESF / T1 DM / SLC-96 synchronization status persists for Nx40ms. Here ‘N’ is decided by the REDDTH[7:0] bits (b7~0, T1/J1-0BCH,...).

T1/J1 Alarm Control (0BAH, 1BAH, 2BAH, 3BAH)

Bit No.	7	6	5	4	3	2	1	0
Bit Name	Reserved					AISE	YELE	REDE
Type						R/W	R/W	R/W
Default						0	0	0

AISE:
= 0: Disable the interrupt on the $\overline{INT}$ pin when the AISI bit (b3, T1/J1-05DH,...) is '1'.
= 1: Enable the interrupt on the $\overline{INT}$ pin when the AISI bit (b3, T1/J1-05DH,...) is '1'.

YELE:
= 0: Disable the interrupt on the $\overline{INT}$ pin when the YELI bit (b3, T1/J1-05DH,...) is '1'.
= 1: Enable the interrupt on the $\overline{INT}$ pin when the YELI bit (b3, T1/J1-05DH,...) is '1'.

REDE:
= 0: Disable the interrupt on the $\overline{INT}$ pin when the REDI bit (b3, T1/J1-05DH,...) is '1'.
= 1: Enable the interrupt on the $\overline{INT}$ pin when the REDI bit (b3, T1/J1-05DH,...) is '1'.

T1/J1 Alarm Indication (0BBH, 1BBH, 2BBH, 3BBH)

Bit No.	7	6	5	4	3	2	1	0
Bit Name	Reserved					AISI	YELI	REDI
Type						R	R	R
Default						0	0	0

AISI:
= 0: There is no status change on the AIS bit (b1, T1/J1-04FH,...).
= 1: There is a transition (from '0' to '1' or from '1' to '0') on the AIS bit (b1, T1/J1-04FH,...).
This bit will be cleared if a '1' is written to it.

YELI:
= 0: There is no status change on the YEL bit (b1, T1/J1-04FH,...).
= 1: There is a transition (from '0' to '1' or from '1' to '0') on the YEL bit (b1, T1/J1-04FH,...).
This bit will be cleared if a '1' is written to it.

REDI:
= 0: There is no status change on the RED bit (b1, T1/J1-04FH,...).
= 1: There is a transition (from '0' to '1' or from '1' to '0') on the RED bit (b1, T1/J1-04FH,...).
This bit will be cleared if a '1' is written to it.

T1/J1 RED Declare Threshold (0BCH, 1BCH, 2BCH, 3BCH)

Bit No.	7	6	5	4	3	2	1	0
Bit Name	REDDTH7	REDDTH6	REDDTH5	REDDTH4	REDDTH3	REDDTH2	REDDTH1	REDDTH0
Type	R/W	R/W	R/W	R/W	R/W	R/W	R/W	R/W
Default	0	0	1	1	1	1	1	1

REDDTH[7:0]:

The RED alarm is declared when the out of SF/ESF/T1 DM/SLC-96 synchronization status persists for Nx40ms. The value of the 'N' is decided by these bits.

T1/J1 RED Clear Threshold (0BDH, 1BDH, 2BDH, 3BDH)

Bit No.	7	6	5	4	3	2	1	0
Bit Name	REDCTH7	REDCTH6	REDCTH5	REDCTH4	REDCTH3	REDCTH2	REDCTH1	REDCTH0
Type	R/W	R/W	R/W	R/W	R/W	R/W	R/W	R/W
Default	0	1	1	1	1	1	1	1

REDCTH[7:0]:

The RED alarm is cleared when the in SF/ESF/T1 DM/SLC-96 synchronization status persists for Mx120ms. The value of the 'M' is decided by these bits.

T1/J1 Yellow Declare Threshold (0BEH, 1BEH, 2BEH, 3BEH)

Bit No.	7	6	5	4	3	2	1	0
Bit Name	YELDTH7	YELDTH6	YELDTH5	YELDTH4	YELDTH3	YELDTH2	YELDTH1	YELDTH0
Type	R/W	R/W	R/W	R/W	R/W	R/W	R/W	R/W
Default	0	0	0	0	1	0	1	0

YELDTH[7:0]:

In T1 SF/SLC-96 format, the Yellow alarm is declared when less than 77 'One's are detected on the Bit 2 of each channel during a 40ms fixed window and this status persists for Nx40ms; in T1 ESF format, the Yellow alarm is declared when more than 7 '0xFF00' (MSB first) are detected on the sliding DL bits during a 40ms fixed window and this status persists for Nx40ms; in T1 DM format, the Yellow alarm is declared when less than 77 'One's are detected on the Y bit (Bit 6 in each CH 24) during a 40ms fixed window and this status persists for Nx40ms; in J1 SF format, the Yellow alarm is declared when less than 4 'One's are detected on the F-bit of the 12nd frame during a 40ms fixed window and this status persists for Nx40ms; in J1 ESF format, the Yellow alarm is declared when less than 3 zeros are detected on the DL bits during a 40ms fixed window and this status persists for Nx40ms. The value of the 'N' are all decided by these bits.

T1/J1 Yellow Clear Threshold (0BFH, 1BFH, 2BFH, 3BFH)

Bit No.	7	6	5	4	3	2	1	0
Bit Name	YELCTH7	YELCTH6	YELCTH5	YELCTH4	YELCTH3	YELCTH2	YELCTH1	YELCTH0
Type	R/W	R/W	R/W	R/W	R/W	R/W	R/W	R/W
Default	0	0	0	0	1	0	1	0

YELCTH[7:0]:

In T1 SF/SLC-96 format, the Yellow alarm is cleared when more than 76 'One's are detected on the Bit 2 of each channel during a 40ms fixed window and this status persists for Mx40ms; in T1 ESF format, the Yellow alarm is cleared when less than 8 '0xFF00' (MSB first) are detected on the sliding DL bits during a 40ms fixed window and this status persists for Mx40ms; in T1 DM format, the Yellow alarm is cleared when more than 76 'One's are detected on the Y bit (Bit 6 in each CH 24) during a 40ms fixed window and this status persists for Mx40ms; in J1 SF format, the Yellow alarm is cleared when more than 3 'One's are detected on the F-bit of the 12nd frame during a 40ms fixed window and this status persists for Mx40ms; in J1 ESF format, the Yellow alarm is cleared when more than 2 zeros are detected on the DL bits during a 40ms fixed window and this status persists for Mx40ms. The value of the 'M' are all decided by these bits.

T1/J1 AIS Declare Threshold (0C0H, 1C0H, 2C0H, 3C0H)

Bit No.	7	6	5	4	3	2	1	0
Bit Name	AISDTH7	AISDTH6	AISDTH5	AISDTH4	AISDTH3	AISDTH2	AISDTH1	AISDTH0
Type	R/W	R/W	R/W	R/W	R/W	R/W	R/W	R/W
Default	0	0	1	1	1	1	1	1

AISDTH[7:0]:

The Blue alarm is declared when less than 61 zeros are detected in a 40ms fixed window and this status persists for Nx40ms. The value of the 'N' is decided by these bits.

T1/J1 AIS Clear Threshold (0C1H, 1C1H, 2C1H, 3C1H)

Bit No.	7	6	5	4	3	2	1	0
Bit Name	AISCTH7	AISCTH6	AISCTH5	AISCTH4	AISCTH3	AISCTH2	AISCTH1	AISCTH0
Type	R/W	R/W	R/W	R/W	R/W	R/W	R/W	R/W
Default	0	0	1	1	1	1	1	1

AISCTH[7:0]:

The Blue alarm is cleared when more than 60 zeros are detected in a 40ms fixed window and this status persists for Mx40ms. The value of the 'M' is decided by these bits.

T1/J1 PMON Control (0C2H, 1C2H, 2C2H, 3C2H)

Bit No.	7	6	5	4	3	2	1	0
Bit Name	Reserved						UPDAT	AUTOUPD
Type							R/W	R/W
Default							0	0

UPDAT:

A transition from ‘0’ to ‘1’ on this bit updates all the PMON indirect registers.

AUTOUPD:

= 0: Disable the automatic update function of the PMON indirect registers.

= 1: All the PMON indirect registers are updated every one second automatically.

T1/J1 PMON Interrupt Control 0 (0C3H, 1C3H, 2C3H, 3C3H)

Bit No.	7	6	5	4	3	2	1	0
Bit Name	PRDGOVE	Reserved		DDSOVE	COFAOVE	OOFOVE	FEROVE	CRCOVE
Type	R/W			R/W	R/W	R/W	R/W	R/W
Default	0			0	0	0	0	0

PRDGOVE:
= 0: Disable the interrupt on the $\overline{INT}$ pin when the PRDGOVI bit (b7, T1/J1-0C5H,...) is ‘1’.
= 1: Enable the interrupt on the $\overline{INT}$ pin when the PRDGOVI bit (b7, T1/J1-0C5H,...) is ‘1’.

DDSOVE:
= 0: Disable the interrupt on the $\overline{INT}$ pin when the DDSOVI bit (b4, T1/J1-0C5H,...) is ‘1’.
= 1: Enable the interrupt on the $\overline{INT}$ pin when the DDSOVI bit (b4, T1/J1-0C5H,...) is ‘1’.

COFAOVE:
= 0: Disable the interrupt on the $\overline{INT}$ pin when the COFAOVI bit (b3, T1/J1-0C5H,...) is ‘1’.
= 1: Enable the interrupt on the $\overline{INT}$ pin when the COFAOVI bit (b3, T1/J1-0C5H,...) is ‘1’.

OOFOVE:
= 0: Disable the interrupt on the $\overline{INT}$ pin when the OOFOVI bit (b2, T1/J1-0C5H,...) is ‘1’.
= 1: Enable the interrupt on the $\overline{INT}$ pin when the OOFOVI bit (b2, T1/J1-0C5H,...) is ‘1’.

FEROVE:
= 0: Disable the interrupt on the $\overline{INT}$ pin when the FEROVI bit (b1, T1/J1-0C5H,...) is ‘1’.
= 1: Enable the interrupt on the $\overline{INT}$ pin when the FEROVI bit (b1, T1/J1-0C5H,...) is ‘1’.

CRCOVE:
= 0: Disable the interrupt on the $\overline{INT}$ pin when the CRCOVI bit (b0, T1/J1-0C5H,...) is ‘1’.
= 1: Enable the interrupt on the $\overline{INT}$ pin when the CRCOVI bit (b0, T1/J1-0C5H,...) is ‘1’.

T1/J1 PMON Interrupt Control 1 (0C4H, 1C4H, 2C4H, 3C4H)

Bit No.	7	6	5	4	3	2	1	0
Bit Name	Reserved							LCVOVE
Type								R/W
Default								0

LCVOVE:
= 0: Disable the interrupt on the $\overline{INT}$ pin when the LCVOVI bit (b0, T1/J1-0C6H,...) is ‘1’.
= 1: Enable the interrupt on the $\overline{INT}$ pin when the LCVOVI bit (b0, T1/J1-0C6H,...) is ‘1’.

T1/J1 PMON Interrupt Indication 0 (0C5H, 1C5H, 2C5H, 3C5H)

Bit No.	7	6	5	4	3	2	1	0
Bit Name	PRDGOVI	Reserved		DDSOVI	COFAOVI	OOFOVI	FEROVI	CRCOVI
Type	R			R	R	R	R	R
Default	0			0	0	0	0	0

PRDGOVI:
= 0: The PMON indirect PRGD Counter Mapping registers have not overflowed.
= 1: The PMON indirect PRGD Counter Mapping registers have overflowed.
This bit will be cleared if a '1' is written to it.

DDSOVI:
= 0: The PMON indirect DDSE Counter Mapping registers have not overflowed.
= 1: The PMON indirect DDSE Counter Mapping registers have overflowed.
This bit will be cleared if a '1' is written to it.

COFAOVI:
= 0: The PMON indirect COFA Counter Mapping register has not overflowed.
= 1: The PMON indirect COFA Counter Mapping register has overflowed.
This bit will be cleared if a '1' is written to it.

OOFOVI:
= 0: The PMON indirect OOF Counter Mapping register has not overflowed.
= 1: The PMON indirect OOF Counter Mapping register has overflowed.
This bit will be cleared if a '1' is written to it.

FEROVI:
= 0: The PMON indirect FER Counter Mapping registers have not overflowed.
= 1: The PMON indirect FER Counter Mapping registers have overflowed.
This bit will be cleared if a '1' is written to it.

CRCOVI:
= 0: The PMON indirect CRCE Counter Mapping registers have not overflowed.
= 1: The PMON indirect CRCE Counter Mapping registers have overflowed.
This bit will be cleared if a '1' is written to it.

T1/J1 PMON Interrupt Indication 1 (0C6H, 1C6H, 2C6H, 3C6H)

Bit No.	7	6	5	4	3	2	1	0
Bit Name	Reserved							LCVOVI
Type								R
Default								0

LCVOVI:
= 0: The PMON indirect LCV Counter Mapping registers have not overflowed.
= 1: The PMON indirect LCV Counter Mapping registers have overflowed.
This bit will be cleared if a '1' is written to it.

T1/J1 TPLC / RPLC / PRGD Test Configuration (0C7H, 1C7H, 2C7H, 3C7H)

Bit No.	7	6	5	4	3	2	1	0
Bit Name	Reserved				PRBSMODE1	PRBSMODE0	PRBSDIR	TESTEN
Type					R/W	R/W	R/W	R/W
Default					0	0	0	0

PRBSMODE[1:0]:

These two bits select one mode to extract/replace the data for the PRBS Generator/Detector.

= 00: The unframed mode is selected. All 24 channels are extracted/replaced and the per-channel configuration in the TEST bit (b6, T1/J1-ID-41~58H) is ignored.

= 01: The 8-bit-based mode is selected. The received data will only be extracted/replaced on the channel configured by the TEST bit (b6, T1/J1-ID-41~58H).

= 10: The 7-bit-based mode is selected. The received data will only be extracted/replaced on the 7 MSB of the channel configured by the TEST bit (b6, T1/J1-ID-41~58H).

= 11: Reserved.

PRBSDIR:

= 0: The pattern in the PRBS Generator/Detector is generated in the transmit path and is detected in the receive path.

= 1: The pattern in the PRBS Generator/Detector is generated in the receive path and is detected in the transmit path.

TESTEN:

A transition from ‘0’ to ‘1’ on this bit initiates the PRBS Generator/Detector.

T1/J1 TPLC Access Status (0C8H, 1C8H, 2C8H, 3C8H)

Bit No.	7	6	5	4	3	2	1	0
Bit Name	Reserved							BUSY
Type								R
Default								0

BUSY:

= 0: No reading or writing operation on the indirect registers.

= 1: An internal indirect register is being accessed. Any new operation on the internal indirect register is not allowed.

T1/J1 TPLC Access Control (0C9H, 1C9H, 2C9H, 3C9H)

Bit No.	7	6	5	4	3	2	1	0
Bit Name	RWN	ADDRESS6	ADDRESS5	ADDRESS4	ADDRESS3	ADDRESS2	ADDRESS1	ADDRESS0
Type	R/W	R/W	R/W	R/W	R/W	R/W	R/W	R/W
Default	0	0	0	0	0	0	0	0

RWN:

= 0: Write the data to the specified indirect register.

= 1: Read the data to the specified indirect register.

ADDRESS[6:0]:

These bits specify the address of the indirect register (from 01H to 18H & from 21H to 38H & from 41H to 58H) for the microprocessor access.

T1/J1 TPLC Access Data (0CAH, 1CAH, 2CAH, 3CAH)

Bit No.	7	6	5	4	3	2	1	0
Bit Name	D7	D6	D5	D4	D3	D2	D1	D0
Type	R/W	R/W	R/W	R/W	R/W	R/W	R/W	R/W
Default	0	0	0	0	0	0	0	0

D[7:0]:

This register holds the value which will be read from or written into the indirect registers (from 01H to 18H & from 21H to 38H & from 41H to 58H). If data is to be written into the indirect register, this register must be written before the target indirect register's address and RWN=0 is written into the TPLC Access Control register. If data is to be read from the indirect register, the target indirect register's address and RWN=1 must be written into the TPLC Access Control register first, then this register will contain the requested data byte.

T1/J1 TPLC Configuration (0CBH, 1CBH, 2CBH, 3CBH)

Bit No.	7	6	5	4	3	2	1	0
Bit Name	SIGSNAP	GSTRKEN	ZCS2	ZCS1	ZCS0	GSUBST2	GSUBST1	GSUBST0
Type	R/W	R/W	R/W	R/W	R/W	R/W	R/W	R/W
Default	1	0	0	0	0	0	0	0

SIGSNAP:

This bit is valid in SF, ESF or SLC-96 format.

= 0: Disable the signaling snapshot.

= 1: Enable the signaling snapshot. That is, the signaling bits of the first frame are locked and input on the TSIGn/MTSIGA(MTSIGB) pin as the signaling bits of the current whole SF, ESF or SLC-96 frame.

GSTRKEN:

= 0: The replacement is performed on a per-channel basis by setting the STRKEN bit (b4, T1/J1-ID-41~58H) in the corresponding channel.

= 1: The signaling bits (ABCD) of all channels are replaced by the signaling trunk conditioning code in the A,B,C,D bits (b3~0, T1/J1-ID-41~58H).

ZCS[2:0]:

These bits select one type of Zero Code Suppression. (Bit 1 is the MSB in the following table).

ZCS[2:0]	Zero Code Suppression
0 0 0	No Zero Code Suppression.
0 0 1	GTE Zero Code Suppression. Bit 8 of an all-zero channel is replaced by a ‘1’, except in signaling frames where Bit 7 is forced to be a ‘1’.
0 1 0	Jammed Bit 8 Zero Code Suppression. Bit 8 of all channels are replaced by a ‘1’.
0 1 1	Bell Zero Code Suppression. Bit 7 of an all-zero channel is replaced by a ‘1’.
1 0 0	DDS Zero Code Suppression. An all-zero channel is replaced with ‘10011000’.
others	Reserved.

GSUBST[2:0]:

These bits select the replacement of all the channels.

GSUBST[2:0]	Replacement Selection
0 0 0	The replacement is performed on a per-channel basis by setting the SUBST[2:0] bits (b7~5, T1/J1-ID-01~18H) in the corresponding channel.
0 0 1	The data of all channels is replaced by the data trunk code set in the DTRK[7:0] bits (b7~0, T1/J1-ID-21~38H).
0 1 0	The data of all channels is replaced by the A-Law digital milliwatt pattern.
0 1 1	The data of all channels is replaced by the μ-Law digital milliwatt pattern.
1 0 0	The data of all channels is replaced by the payload loopback code extracted from the Elastic Store Buffer in the receive path.
others	Reserved.

T1/J1 TPLC Control Enable (0CCH, 1CCH, 2CCH, 3CCH)

Bit No.	7	6	5	4	3	2	1	0
Bit Name	Reserved				ABXX	Reserved		PCCE
Type					R/W			R/W
Default					0			0

ABXX:

This bit is valid in ESF & SLC-96 format.

= 0: The signaling bits are valid in the lower nibble of each channel.

= 1: The signaling bits are valid in the upper 2-bit positions of the lower nibble of each channel. The other bits of the channel are Don't Care conditions.

PCCE:

= 0: Disable all the functions in the Transmit Payload Control.

= 1: Enable all the functions in the Transmit Payload Control.

T1/J1 RPLC Access Status (0CDH, 1CDH, 2CDH, 3CDH)

Bit No.	7	6	5	4	3	2	1	0
Bit Name	Reserved							BUSY
Type								R
Default								0

BUSY:

= 0: No reading or writing operation on the indirect registers.

= 1: An internal indirect register is being accessed. Any new operation on the internal indirect register is not allowed.

T1/J1 RPLC Access Control (0CEH, 1CEH, 2CEH, 3CEH)

Bit No.	7	6	5	4	3	2	1	0
Bit Name	RWN	ADDRESS6	ADDRESS5	ADDRESS4	ADDRESS3	ADDRESS2	ADDRESS1	ADDRESS0
Type	R/W	R/W	R/W	R/W	R/W	R/W	R/W	R/W
Default	0	0	0	0	0	0	0	0

RWN:

= 0: Write the data to the specified indirect register.

= 1: Read the data to the specified indirect register.

ADDRESS[6:0]:

These bits specify the address of the indirect register (from 01H to 18H & from 21H to 38H & from 41H to 58H) for the microprocessor access.

T1/J1 RPLC Access Data (0CFH, 1CFH, 2CFH, 3CFH)

Bit No.	7	6	5	4	3	2	1	0
Bit Name	D7	D6	D5	D4	D3	D2	D1	D0
Type	R/W	R/W	R/W	R/W	R/W	R/W	R/W	R/W
Default	0	0	0	0	0	0	0	0

D[7:0]:

This register holds the value which will be read from or written into the indirect registers (from 01H to 18H & from 21H to 38H & from 41H to 58H). If data is to be written into the indirect register, this register must be written before the target indirect register's address and RWN=0 is written into the RPLC Access Control register. If data is to be read from the indirect register, the target indirect register's address and RWN=1 must be written into the RPLC Access Control register first, then this register will contain the requested data byte.

T1/J1 RPLC Configuration (0D0H, 1D0H, 2D0H, 3D0H)

Bit No.	7	6	5	4	3	2	1	0
Bit Name	SIGSNAP	GSTRKEN	Reserved			GSUBST2	GSUBST1	GSUBST0
Type	R/W	R/W				R/W	R/W	R/W
Default	1	0				0	0	0

SIGSNAP:

This bit is valid when SF, ESF or SLC-96 frame is in synchronization.

= 0: Disable the signaling snapshot.

= 1: Enable the signaling snapshot. That is, the signaling bits of the first frame are locked and output on the RSIGn/MRSIGA(MRSIGB) pin as the signaling bits of the current whole SF, ESF or SLC-96 frame.

GSTRKEN:

= 0: The replacement is performed on a per-channel basis by setting the STRKEN bit (b4, T1/J1-ID-41~58H) in the corresponding channel.

= 1: The signaling bits (ABCD) of all channels are replaced by the signaling trunk conditioning code in the A,B,C,D bits (b3~0, T1/J1-ID-41~58H).

GSUBST[2:0]:

These bits select the replacement of all the channels.

GSUBST[2:0]	Replacement Selection
000	The replacement is performed on a per-channel basis by setting the SUBST[2:0] bits (b7~5, T1/J1-ID-01~18H) in the corresponding channel.
001	The data of all channels is replaced by the data trunk code set in the DTRK[7:0] bits (b7~0, T1/J1-ID-21~38H).
010	The data of all channels is replaced by the A-Law digital milliwatt pattern.
011	The data of all channels is replaced by the μ-Law digital milliwatt pattern.
the others	Reserved.

T1/J1 RPLC Control Enable (0D1H, 1D1H, 2D1H, 3D1H)

Bit No.	7	6	5	4	3	2	1	0
Bit Name	Reserved				ABXX	SIGFIX	POL	PCCE
Type					R/W	R/W	R/W	R/W
Default					0	0	0	0

ABXX:

This bit is valid in ESF & SLC-96 format.

= 0: The signaling bits are valid in the lower nibble of each channel.

= 1: The signaling bits are valid in the upper 2-bit positions of the lower nibble of each channel. The other bits of the channel are Don't Care conditions.

SIGFIX:

This bit is only valid in the SF, ESF and SLC-96 formats.

= 0: Disable the signaling bits fixing function.

= 1: The signaling bits (ABCD) are fixed to the value set in the POL bit (b1, T1/J1-0D1H,...).

POL:

This bit is only valid when the SIGFIX bit is '1'.

= 0: The signaling bits (ABCD) are fixed to logic 0.

= 1: The signaling bits (ABCD) are fixed to logic 1.

PCCE:

= 0: Disable all the functions in the Receive Payload Control.

= 1: Enable all the functions in the Receive Payload Control.

T1/J1 RCRB Configuration (0D2H, 1D2H, 2D2H, 3D2H)

Bit No.	7	6	5	4	3	2	1	0
Bit Name	Reserved				FREEZE	DEB	SIGE	SIGF
Type					R/W	R/W	R/W	R/W
Default					0	0	0	1

FREEZE:

= 0: Disable the manual signaling freezing.

= 1: Manually freeze the signaling data in the A,B,C,D bits (b3~0, T1/J1-ID-01~18H) as the previous valid value.

DEB:

= 0: Disable the signaling de-bounce.

= 1: Enable the signaling de-bounce. That is, the A,B,C,D bits (b3~0, T1/J1-ID-01~18H) are updated only if 2 consecutive received AB/ABCD codewords of the same channel are identical.

SIGE:

= 0: Disable the interrupt on the $\overline{INT}$ pin when any of the COSI bits (T1/J1-0D8H,... & T1/J1-0D7H,... & T1/J1-0D6H,...) is ‘1’.

= 1: Enable the interrupt on the $\overline{INT}$ pin when any of the COSI bits (T1/J1-0D8H,... & T1/J1-0D7H,... & T1/J1-0D6H,...) is ‘1’.

SIGF:

This bit is valid only in the ESF and SLC-96 format.

= 0: The extracted signaling bits are in 4 states signaling, i.e., the signaling bits on Framer 6 & 18 of a signaling multi-frame are recognized as ‘A’ and the signaling bits on Framer 12 & 24 are recognized as ‘B’. Only the signaling bits A & B are saved in the Extracted Signaling Data/Extract Enable register. The C & D bits in the Extracted Signaling Data/Extract Enable register are not cared.

= 1: The extracted signaling bits are in 16 states signaling, i.e., four signaling bits A, B, C & D are all saved in the Extracted Signaling Data/ Extract Enable register.

T1/J1 RCRB Access Status (0D3H, 1D3H, 2D3H, 3D3H)

Bit No.	7	6	5	4	3	2	1	0
Bit Name	Reserved							BUSY
Type								R
Default								0

BUSY:

= 0: No reading or writing operation on the indirect registers.

= 1: An internal indirect register is being accessed. Any new operation on the internal indirect register is not allowed.

T1/J1 RCRB Access Control (0D4H, 1D4H, 2D4H, 3D4H)

Bit No.	7	6	5	4	3	2	1	0
Bit Name	RWN	ADDRESS6	ADDRESS5	ADDRESS4	ADDRESS3	ADDRESS2	ADDRESS1	ADDRESS0
Type	R/W	R/W	R/W	R/W	R/W	R/W	R/W	R/W
Default	0	0	0	0	0	0	0	0

RWN:

= 0: Write the data to the specified indirect register.

= 1: Read the data to the specified indirect register.

ADDRESS[6:0]:

These bits specify the address of the indirect register (from 01H to 18H) for the microprocessor access.

T1/J1 RCRB Access Data (0D5H, 1D5H, 2D5H, 3D5H)

Bit No.	7	6	5	4	3	2	1	0
Bit Name	D7	D6	D5	D4	D3	D2	D1	D1
Type	R/W	R/W	R/W	R/W	R/W	R/W	R/W	R/W
Default	0	0	0	0	0	0	0	0

D[7:0]:

This register holds the value which will be read from or written into the indirect registers (from 01H to 18H). If data is to be written into the indirect register, this register must be written before the target indirect register's address and RWN=0 is written into the RCRB Access Control register. If data is to be read from the indirect register, the target indirect register's address and RWN=1 must be written into the RCRB Access Control register first, then this register will contain the requested data byte.

T1/J1 RCRB State Change Indication 0 (0D6H, 1D6H, 2D6H, 3D6H)

Bit No.	7	6	5	4	3	2	1	0
Bit Name	COSI8	COSI7	COSI6	COSI5	COSI4	COSI3	COSI2	COSI1
Type	R	R	R	R	R	R	R	R
Default	0	0	0	0	0	0	0	0

COSI[X]:

= 0: The signaling bits in its corresponding channel is not changed.

= 1: The signaling bits in its corresponding channel is changed.

The corresponding bit will be cleared if a ‘1’ is written to it. The COSI[8:1] bits correspond to channel 8 ~ 1 respectively.

T1/J1 RCRB State Change Indication 1 (0D7H, 1D7H, 2D7H, 3D7H)

Bit No.	7	6	5	4	3	2	1	0
Bit Name	COSI16	COSI15	COSI14	COSI13	COSI12	COSI11	COSI10	COSI9
Type	R	R	R	R	R	R	R	R
Default	0	0	0	0	0	0	0	0

COSI[X]:

= 0: The signaling bits in its corresponding channel is not changed.

= 1: The signaling bits in its corresponding channel is changed.

The corresponding bit will be cleared if a ‘1’ is written to it. The COSI[16:9] bits correspond to channel 16 ~ 9 respectively.

T1/J1 RCRB State Change Indication 2 (0D8H, 1D8H, 2D8H, 3D8H)

Bit No.	7	6	5	4	3	2	1	0
Bit Name	COSI24	COSI23	COSI22	COSI21	COSI20	COSI19	COSI18	COSI17
Type	R	R	R	R	R	R	R	R
Default	0	0	0	0	0	0	0	0

COSI[X]:

= 0: The signaling bits in its corresponding channel is not changed.

= 1: The signaling bits in its corresponding channel is changed.

The corresponding bit will be cleared if a ‘1’ is written to it. The COSI[24:17] bits correspond to channel 24 ~ 17 respectively.

5.2.1.2 Indirect Register

PMON:

The PMON Counter Mapping Registers (00H ~ 0BH) of a link are updated as a group in the following three ways:

1. A transition from '0' to '1' on the UPDAT bit (b1, T1/J1-0C2H,...) updates all the registers;
2. If the AUTOUPD bit (b0, T1/J1-0C2H,...) is set to '1', the registers will be updated every one second;

T1/J1 CRCE Counter Mapping 0 (00H)

Bit No.	7	6	5	4	3	2	1	0
Bit Name	CRCE7	CRCE6	CRCE5	CRCE4	CRCE3	CRCE2	CRCE1	CRCE0
Type	R	R	R	R	R	R	R	R
R	0	0	0	0	0	0	0	0

CRCE[7:0]:

In ESF format, these bits together with the CRCE[9:8] bits count the CRC-6 Error numbers. The CRCE[0] bit is the LSB.

T1/J1 CRCE Counter Mapping 1 (01H)

Bit No.	7	6	5	4	3	2	1	0
Bit Name	Reserved						CRCE9	CRCE8
Type							R	R
Default							0	0

CRCE[9:8]:

In ESF format, these bits together with the CRCE[7:0] bits count the CRC-6 Error numbers. The CRCE[9] bit is the MSB.

T1/J1 FER Counter Mapping 0 (02H)

Bit No.	7	6	5	4	3	2	1	0
Bit Name	FER7	FER6	FER5	FER4	FER3	FER2	FER1	FER0
Type	R	R	R	R	R	R	R	R
Default	0	0	0	0	0	0	0	0

FER[7:0]:

In SF / T1 DM / SLC-96 format, these bits together with the FER[11:8] bits count the F Bit Error numbers. The FER[0] bit is the LSB.

In ESF format, these bits together with the FER[11:8] bits count the Frame Alignment Bit Error numbers. The FER[0] bit is the LSB.

T1/J1 FER Counter Mapping 1 (03H)

Bit No.	7	6	5	4	3	2	1	0
Bit Name	Reserved				FER11	FER10	FER9	FER8
Type					R	R	R	R
Default					0	0	0	0

FER[11:8]:

In SF / T1 DM / SLC-96 format, these bits together with the FER[7:0] bits count the F Bit Error numbers. The FER[11] bit is the MSB.

In ESF format, these bits together with the FER[7:0] bits count the Frame Alignment Bit Error numbers. The FER[11] bit is the MSB.

T1/J1 COFA Counter Mapping (04H)

Bit No.	7	6	5	4	3	2	1	0
Bit Name	Reserved					COFA2	COFA1	COFA0
Type						R	R	R
Default						0	0	0

COFA[2:0]:

These bits count the times of the new-found F bit position being different from the previous one events.

T1/J1 OOF Counter Mapping (05H)

Bit No.	7	6	5	4	3	2	1	0
Bit Name	Reserved			OOF4	OOF3	OOF2	OOF1	OOF0
Type				R	R	R	R	R
Default				0	0	0	0	0

OOF[4:0]:

In SF / ESF / T1 DM / SLC-96 format, these bits count the times of out of SF / ESF / T1 DM / SLC-96 synchronization events.

T1/J1 PRGD Counter Mapping 0 (06H)

Bit No.	7	6	5	4	3	2	1	0
Bit Name	PRGD7	PRGD6	PRGD5	PRGD4	PRGD3	PRGD2	PRGD1	PRGD0
Type	R	R	R	R	R	R	R	R
Default	0	0	0	0	0	0	0	0

PRGD[7:0]:

These bits together with the PRGD[15:8] bits count the PRGD Bit Error numbers. The PRGD[0] bit is the LSB.

T1/J1 PRGD Counter Mapping 1 (07H)

Bit No.	7	6	5	4	3	2	1	0
Bit Name	PRGD15	PRGD14	PRGD13	PRGD12	PRGD11	PRGD10	PRGD9	PRGD8
Type	R	R	R	R	R	R	R	R
Default	0	0	0	0	0	0	0	0

PRGD[15:8]:

These bits together with the PRGD[7:0] bits count the PRGD Bit Error numbers. The PRGD[15] bit is the MSB.

T1/J1 LCV Counter Mapping 0 (08H)

Bit No.	7	6	5	4	3	2	1	0
Bit Name	LCV7	LCV6	LCV5	LCV4	LCV3	LCV2	LCV1	LCV0
Type	R	R	R	R	R	R	R	R
Default	0	0	0	0	0	0	0	0

LCV[7:0]:

These bits together with the LCV[15:8] bits count the Bipolar Violation (BPV) Error (in AMI decoding) or B8ZS Code Violation (CV) Error (in B8ZS decoding) numbers. The LCV[0] bit is the LSB.

T1/J1 LCV Counter Mapping 1 (09H)

Bit No.	7	6	5	4	3	2	1	0
Bit Name	LCV15	LCV14	LCV13	LCV12	LCV11	LCV10	LCV9	LCV8
Type	R	R	R	R	R	R	R	R
Default	0	0	0	0	0	0	0	0

LCV[15:8]:

These bits together with the LCV[7:0] bits count the Bipolar Violation (BPV) Error (in AMI decoding) or B8ZS Code Violation (CV) Error (in B8ZS decoding) numbers. The LCV[15] bit is the MSB.

T1/J1 DDSE Counter Mapping 0 (0AH)

Bit No.	7	6	5	4	3	2	1	0
Bit Name	DDSE7	DDSE6	DDSE5	DDSE4	DDSE3	DDSE2	DDSE1	DDSE0
Type	R	R	R	R	R	R	R	R
Default	0	0	0	0	0	0	0	0

DDSE[7:0]:

In T1 DM format, these bits together with the DDSE[9:8] bits count the DDS Pattern Error numbers. The DDSE[0] bit is the LSB.

T1/J1 DDSE Counter Mapping 1 (0BH)

Bit No.	7	6	5	4	3	2	1	0
Bit Name	Reserved						DDSE9	DDSE8
Type							R	R
Default							0	0

DDSE[9:8]:

In T1 DM format, these bits together with the DDSE[7:0] bits count the DDS Pattern Error numbers. The DDSE[9] bit is the MSB

RCRB:

The indirect registers of RCRB addressed from 01H to 18H are the Extracted Signaling Data / Extract Enable Registers for CH1 to CH24. Each address corresponds to one channel.

T1/J1 Extracted Signaling Data/Extract Enable Register (01H ~ 18H)

Bit No.	7	6	5	4	3	2	1	0
Bit Name	Reserved			EXTRACT	A	B	C	D
Type				R/W	R	R	R	R
Default				1	0	0	0	0

EXTRACT:

This bit is valid when the SF/ESF/SLC-96 frame is synchronized.
= 0: Disable the signaling bits extraction.
= 1: The signaling bits are extracted to the A,B,C,D bits (b3~0, T1/J1-ID-01~18H).
In T1-DM format, there is no signaling bits. The EXTRACT bit of all the channels should be set to ‘0’.

A, B, C, D:

These bits are valid when the EXTRACT bit (b4, T1/J1-ID-01~18H) is enabled.
These bits are the extracted signaling bits. In SF format, the C, D bits are the repetition of the signaling bits A & B.

RPLC:

The indirect registers of RPLC addressed from 01H to 18H are the Channel Control Registers for CH1 to CH24. Each address corresponds to one channel.

The indirect registers of RPLC addressed from 21H to 38H are the Data Trunk Conditioning Code Registers for CH1 to CH24. Each address corresponds to one channel.

The indirect registers of RPLC addressed from 41H to 58H are the Signaling Trunk Conditioning Code Registers for CH1 to CH24. Each address corresponds to one channel.

T1/J1 Channel Control Register (01H ~ 18H)

Bit No.	**7**	**6**	**5**	**4**	**3**	**2**	**1**	**0**
Bit Name	SUBST2	SUBST1	SUBST0	SINV	OINV	EINV	G56K	GAP
Type	R/W	R/W	R/W	R/W	R/W	R/W	R/W	R/W
Default	0	0	0	0	0	0	0	0

SUBST[2:0]:

When the GSUBST[2:0] bits (b2~0, T1/J1-0D0H,...) are ‘000’, these bits select the replacement on a per-channel basis.

SUBST[2:0]	**Replacement Selection**
000	No operation.
001	The data of the corresponding channel is replaced by the data trunk code set in the DTRK[7:0] bits (b7~0, T1/J1-ID-21~38H).
010	The data of the corresponding channel is replaced by the A-Law digital milliwatt pattern.
011	The data of the corresponding channel is replaced by the μ-Law digital milliwatt pattern.
the others	Reserved.

SINV, OINV, EINV:

These three bits select how to invert the bits in the corresponding channel.

SINV	**OINV**	**EINV**	**Bit Inversion**
0	0	0	No inversion.
0	0	1	Invert the even bits (bit 2, 4, 6, 8) of the corresponding channel (bit 1 is the MSB).
0	1	0	Invert the odd bits (bit 3, 5, 7) except the MSB of the corresponding channel (bit 1 is the MSB).
0	1	1	Invert the bits from bit 2 to bit 8 of the corresponding channel (bit 1 is the MSB).
1	0	0	Invert the MSB (bit 1) of the corresponding channel.
1	0	1	Invert the MSB (bit 1) and the even bits (bit 2, 4, 6, 8) of the corresponding channel.
1	1	0	Invert all the odd bits (bit 1, 3, 5, 7) of the corresponding channel (bit 1 is the MSB).
1	1	1	Invert all the bits (bit 1 ~ bit 8) of the corresponding channel (bit 1 is the MSB).

G56K, GAP:

These bits are valid in Receive Clock Master mode when the PCCE bit (b0, T1/J1-0D1H,...) is '1'.

G56K	GAP	Gap Mode
0	0	The corresponding channel is not gapped.
1	0	Bit 8 (LSB) of the corresponding channel is gapped (no clock signal during the Bit 8).
X	1	The corresponding channel is gapped (no clock signal during the channel).

T1/J1 Data Trunk Conditioning Code Register (21H ~ 38H)

Bit No.	7	6	5	4	3	2	1	0
Bit Name	DTRK7	DTRK6	DTRK5	DTRK4	DTRK3	DTRK2	DTRK1	DTRK0
Type	R/W	R/W	R/W	R/W	R/W	R/W	R/W	R/W
Default	0	0	0	0	0	0	0	0

DTRK[7:0]:

These bits are the data trunk code that can replace the data of the channel selected by the GSUBST[2:0] bits (b2~0, T1/J1-0D0H,...) or the SUBST[2:0] bits (b7~5, T1/J1-ID-01~18H).

T1/J1 Signaling Trunk Conditioning Code Register (41H ~ 58H)

Bit No.	7	6	5	4	3	2	1	0
Bit Name	Reserved	TEST	Reserved	STRKEN	A	B	C	D
Type		R/W		R/W	R/W	R/W	R/W	R/W
Default		0		0	0	0	0	0

TEST:

This bit is valid in 8-bit-based mode or in 7-bit-based mode selected by the PRBSMODE[1:0] bits (b3~2, T1/J1-0C7H,...).

= 0: Disable the data in the corresponding channel to be tested by the PRBS Generator/Detector.

= 1: Enable the data in the corresponding channel to be extracted to the PRBS Generator/Detector for test (when the PRBSDIR bit (b1, T1/J1-0C7H,...) is ‘0’); or enable the test pattern from the PRBS Generator/Detector to replace the data in the corresponding channel for test (when the PRBSDIR bit (b1, T1/J1-0C7H,...) is ‘1’). In 8-bit-based mode, the data refers to all 8 bits. In 7-bit-based mode, the data refers to the 7 MSB.

All the channels that are extracted to the PRBS Generator/Detector are concatenated and treated as a continuous stream in which pseudo random are searched for. Similarly, all the channels set to be replaced with the PRBS Generator/Detector test pattern data are concatenated replaced by the PRBS.

STRKEN:

= 0: No operation.

= 1: The data of the corresponding channel is replaced by the signaling trunk code set in the A, B, C, D bits (b3~0, T1/J1-ID-41~58H).

A, B, C, D:

These bits are the signaling trunk code that can replace the signaling bits of the channel selected by the GSTRKEN bit (b6, T1/J1-0D0H,...) or the STRKEN bit (b4, T1/J1-ID-41~58H).

TPLC:

The indirect registers of TPLC addressed from 01H to 18H are the Channel Control Registers for CH1 to CH24. Each address corresponds to one channel.

The indirect registers of TPLC addressed from 21H to 38H are the Data Trunk Conditioning Code Registers for CH1 to CH24. Each address corresponds to one channel.

The indirect registers of TPLC addressed from 41H to 58H are the Signaling Trunk Conditioning Code Registers for CH1 to CH24. Each address corresponds to one channel.

T1/J1 Channel Control Register (01H ~ 18H)

Bit No.	**7**	**6**	**5**	**4**	**3**	**2**	**1**	**0**
Bit Name	SUBST2	SUBST1	SUBST0	SINV	OINV	EINV	G56K	GAP
Type	R/W	R/W	R/W	R/W	R/W	R/W	R/W	R/W
Default	0	0	0	0	0	0	0	0

SUBST[2:0]:

When the GSUBST[2:0] bits (b2~0, T1/J1-0CBH,...) are ‘000’, these bits select the replacement on a per-channel basis.

SUBST[2:0]	**Replacement Selection**
0 0 0	No operation.
0 0 1	The data of the corresponding channel is replaced by the data trunk code set in the DTRK[7:0] bits (b7~0, T1/J1-ID-21~38H).
0 1 0	The data of the corresponding channel is replaced by the A-Law digital milliwatt pattern.
0 1 1	The data of the corresponding channel is replaced by the μ-Law digital milliwatt pattern.
1 0 0	The data of the corresponding channel is replaced by the payload loopback code extracted from the Elastic Store Buffer in the receive path.
others	Reserved.

SINV, OINV, EINV:

These three bits select how to invert the bits in the corresponding channel.

SINV	**OINV**	**EINV**	**Bit Inversion**
0	0	0	No inversion.
0	0	1	Invert the even bits (bit 2, 4, 6, 8) of the corresponding channel (bit 1 is the MSB).
0	1	0	Invert the odd bits (bit 3, 5, 7) except the MSB of the corresponding channel (bit 1 is the MSB).
0	1	1	Invert the bits from bit 2 to bit 8 of the corresponding channel (bit 1 is the MSB).
1	0	0	Invert the MSB (bit 1) of the corresponding channel.
1	0	1	Invert the MSB (bit 1) and the even bits (bit 2, 4, 6, 8) of the corresponding channel.
1	1	0	Invert all the odd bits (bit 1, 3, 5, 7) of the corresponding channel (bit 1 is the MSB).
1	1	1	Invert all the bits (bit 1 ~ bit 8) of the corresponding channel (bit 1 is the MSB).

G56K, GAP:

These bits are valid in Transmit Clock Master mode when the PCCE bit (b0, T1/J1-0CCH,...) is '1'.

G56K	GAP	Gap Mode
0	0	The corresponding channel is not gapped.
1	0	Bit 8 (LSB) of the corresponding channel is gapped (no clock signal during the Bit 8).
X	1	The corresponding channel is gapped (no clock signal during the channel).

T1/J1 Data Trunk Conditioning Code Register (21H ~ 38H)

Bit No.	7	6	5	4	3	2	1	0
Bit Name	DTRK7	DTRK6	DTRK5	DTRK4	DTRK3	DTRK2	DTRK1	DTRK0
Type	R/W	R/W	R/W	R/W	R/W	R/W	R/W	R/W
Default	0	0	0	0	0	0	0	0

DTRK[7:0]:

These bits are the data trunk code that can replace the data of the channel selected by the GSUBST[2:0] bits (b2~0, T1/J1-0CBH,...) or the SUBST[2:0] bits (b7~5, T1/J1-ID-01~18H).

T1/J1 Signaling Trunk Conditioning Code Register (41H ~ 58H)

Bit No.	7	6	5	4	3	2	1	0
Bit Name	Reserved	TEST	SIGINS	STRKEN	A	B	C	D
Type		R/W	R/W	R/W	R/W	R/W	R/W	R/W
Default		0	0	0	0	0	0	0

TEST:

This bit is valid in 8-bit-based mode or in 7-bit-based mode selected by the PRBSMODE[1:0] bits (b3~2, T1/J1-0C7H,...).

= 0: Disable the data in the corresponding channel to be tested by the PRBS Generator/Detector.

= 1: Enable the data in the corresponding channel to be extracted to the PRBS Generator/Detector for test (when the PRBSDIR bit (b1, T1/J1-0C7H,...) is '1'); or enable the test pattern from the PRBS Generator/Detector to replace the data in the corresponding channel for test (when the PRBSDIR bit (b1, T1/J1-0C7H,...) is '0'). In 8-bit-based mode, the data refers to all 8 bits. In 7-bit-based mode, the data refers to the 7 MSB.

All the channels that are extracted to the PRBS Generator/Detector are concatenated and treated as a continuous stream in which pseudo random are searched for. Similarly, all the channels set to be replaced with the PRBS Generator/Detector test pattern data are concatenated replaced by the PRBS.

SIGINS:

= 0: The signaling insertion is not allowed.

= 1: The signaling bits are inserted into the data stream to be transmitted. The signaling source is selected by the STRKEN bit (b4, T1/J1-ID-41~58H).

STRKEN:

= 0: No operation.

= 1: The data of the corresponding channel is replaced by the signaling trunk code set in the A, B, C, D bits (b3~0, T1/J1-ID-41~58H).

A, B, C, D:

These bits are the signaling trunk code that can replace the signaling bits of the channel selected by the GSTRKEN bit (b6, T1/J1-0CBH,...) or the STRKEN bit (b4, T1/J1-ID-41~58H).

5.2.2 E1 MODE

5.2.2.1 Direct Register

E1 Chip ID For Quad Transceiver (001H)

Bit No.	7	6	5	4	3	2	1	0
Bit Name	ID7	ID6	ID5	ID4	ID3	ID2	ID1	ID0
Type	R	R	R	R	R	R	R	R
Default	0	0	1	0	X	X	X	X

ID[7:0]:

The ID[7:0] bits are pre-set. The ID[7:4] bits represent the IDT82P2284 device. The ID[3:0] bits represent the current version number ('0001' is for the first version).

E1 Software Reset (004H)

Bit No.	7	6	5	4	3	2	1	0
Bit Name								
Type					X			
Default								

A write operation to this register will generate a software reset.

The software reset will set all the registers except the T1/J1 Or E1 Mode register (020H,...) to their default values. If the setting is changed in the T1/J1 Or E1 Mode register (020H,...), a software reset must be applied.

E1 G.772 Monitor Control (005H)

Bit No.	7	6	5	4	3	2	1	0
Bit Name	Reserved				MON3	MON2	MON1	MON0
Type					R/W	R/W	R/W	R/W
Default					0	0	0	0

MON[3:0]:

These bits determine whether the G.772 Monitor is implemented. When the G.772 Monitor is implemented, these bits select one transmitter or receiver to be monitored by the Link 1.

MON[3:0]	Monitored Path	MON[3:0]	Monitored Path
0000	No transmitter or receiver is monitored.	1000	No transmitter or receiver is monitored.
0001	The receiver of the Link 2 is monitored.	1001	The transmitter of the Link 2 is monitored.
0010	The receiver of the Link 3 is monitored.	1010	The transmitter of the Link 3 is monitored.
0011	The receiver of the Link 4 is monitored.	1011	The transmitter of the Link 4 is monitored.
0100	Reserved	1100	Reserved
0101		1101	
0110		1110	
0111		1111	

E1 GPIO Control (006H)

Bit No.	7	6	5	4	3	2	1	0
Bit Name	Reserved				LEVEL1	LEVEL0	DIR1	DIR0
Type					R/W	R/W	R/W	R/W
Default					0	0	1	1

LEVEL[1]:

When the GPIO[1] pin is defined as an output port, this bit can be read and written:
= 0: The GPIO[1] pin outputs low level.
= 1: The GPIO[1] pin outputs high level.
When the GPIO[1] pin is defined as an input port, this bit can only be read:
= 0: Low level is input on the GPIO[1] pin.
= 1: High level is input on the GPIO[1] pin.

LEVEL[0]:

When the GPIO[0] pin is defined as an output port, this bit can be read and written:
= 0: The GPIO[0] pin outputs low level.
= 1: The GPIO[0] pin outputs high level.
When the GPIO[0] pin is defined as an input port, this bit can only be read:
= 0: Low level is input on the GPIO[0] pin.
= 1: High level is input on the GPIO[0] pin.

DIR[1]:

= 0: The GPIO[1] pin is used as an output port.
= 1: The GPIO[1] pin is used as an input port.

DIR[0]:

= 0: The GPIO[0] pin is used as an output port.
= 1: The GPIO[0] pin is used as an input port.

E1 Reference Clock Output Select (007H)

Bit No.	7	6	5	4	3	2	1	0
Bit Name	Reserved			RO21	RO20	Reserved	RO11	RO10
Type				R/W	R/W		R/W	R/W
Default				0	0		0	0

RO2[1:0]:

When no LOS is detected, the REFB_OUT pin outputs a recovered clock from the Clock and Data Recovery function block of one of the four links. The link is selected by these bits:

RO2[1:0]	Selected Link
00	Link 1
01	Link 2
10	Link 3
11	Link 4

When LOS is detected, the REFB_OUT pin outputs MCLK or high level, as selected by the REFH_LOS bit (b0, E1-03EH,...). (This feature is available in ZB revision only).

RO1[1:0]:

When no LOS is detected, the REFA_OUT pin outputs a recovered clock from the Clock and Data Recovery function block of one of the four links. The link is selected by these bits:

RO2[1:0]	Selected Link
00	Link 1
01	Link 2
10	Link 3
11	Link 4

When LOS is detected, the REFA_OUT pin outputs MCLK or high level, as selected by the REFH_LOS bit (b0, E1-03EH,...). (This feature is available in ZB revision only).

E1 Interrupt Requisition Link ID (009H)

Bit No.	7	6	5	4	3	2	1	0
Bit Name	Reserved				INT4	INT3	INT2	INT1
Type					R	R	R	R
Default					0	0	0	0

INTn:

= 0: No interrupt is generated in the corresponding link.

= 1: At least one interrupt is generated in the corresponding link.

E1 Timer Interrupt Control (00AH)

Bit No.	7	6	5	4	3	2	1	0
Bit Name	Reserved							TMOVE
Type								R/W
Default								0

TMOVE:

= 0: Disable the interrupt on the $\overline{INT}$ pin when the TMOVI bit (b0, E1-00BH) is ‘1’.

= 1: Enable the interrupt on the $\overline{INT}$ pin when the TMOVI bit (b0, E1-00BH) is ‘1’.

E1 Timer Interrupt Indication (00BH)

Bit No.	7	6	5	4	3	2	1	0
Bit Name	Reserved							TMOVI
Type								R
Default								0

TMOVI:

The device times every one second.

= 0: One second timer is not over.

= 1: One second timer is over.

This bit will be cleared if a ’1’ is written to it.

E1 PMON Access Port (00EH)

Bit No.	7	6	5	4	3	2	1	0
Bit Name	Reserved	LINKSEL1	LINKSEL0	Reserved	ADDR3	ADDR2	ADDR1	ADDR0
Type		R/W	R/W		R/W	R/W	R/W	R/W
Default		0	0		0	0	0	0

LINKSEL[1:0]:

These bits select one of the four links. One of the PMON indirect registers of the selected link can be accessed by the microprocessor.

LINKSEL[1:0]	Selected Link
00	Link 1
01	Link 2
10	Link 3
11	Link 4

ADDR[3:0]:

These bits select one of the PMON indirect registers of the selected link to be accessed by the microprocessor.

Address	PMON Indirect Register	Address	PMON Indirect Register
00H	CRCE Counter Mapping 0	08H	LCV Counter Mapping 0
01H	CRCE Counter Mapping 1	09H	LCV Counter Mapping 1
02H	FER Counter Mapping 0	0AH	TCRCE Counter Mapping 0
03H	FER Counter Mapping 1	0BH	TCRCE Counter Mapping 1
04H	COFA Counter Mapping	0CH	FEBE Counter Mapping 0
05H	OOF Counter Mapping	0DH	FEBE Counter Mapping 1
06H	PRGD Counter Mapping 0	0EH	TFEBE Counter Mapping 0
07H	PRGD Counter Mapping 1	0FH	TFEBE Counter Mapping 1

E1 PMON Access Data (00FH)

Bit No.	7	6	5	4	3	2	1	0
Bit Name	DAT7	DAT6	DAT5	DAT4	DAT3	DAT2	DAT1	DAT0
Type	R	R	R	R	R	R	R	R
Default	0	0	0	0	0	0	0	0

DAT[7:0]:

These bits hold the value which is read from the selected PMON indirect register.

E1 Backplane Global Configuration (010H)

Bit No.	7	6	5	4	3	2	1	0
Bit Name	Reserved			RSLVCK	RMUX	MTSDA	TSLVCK	TMUX
Type				R/W	R/W	R/W	R/W	R/W
Default				1	0	1	1	0

RSLVCK:

This bit is valid when all four links are in the Receive Clock Slave mode.
= 0: Each link uses its own clock signal on the RSCKn pin and framing pulse on the RSFSn pin.
= 1: All four links use the clock signal on the RSCK[1] pin and the framing pulse on the RSFS[1] pin.

RMUX:

= 0: The Receive System Interface of the device is operated in the Non-multiplexed mode.
= 1: The Receive System Interface of the device is operated in the Multiplexed mode.

MTSDA:

This bit is valid in Transmit Multiplexed mode. It selects one multiplexed bus for the Transmit System Interface of the device.
= 0: The multiplexed bus B is selected. The data and signaling bits are de-multiplexed from multiplexed bus B.
= 1: The multiplexed bus A is selected. The data and signaling bits are de-multiplexed from multiplexed bus A.

TSLVCK:

This bit is valid when all four links are in the Transmit Clock Slave mode.
= 0: Each link uses its own timing signal on the TSCKn pin and framing pulse on the TSFSn pin.
= 1: All four links use the timing signal on the TSCK[1] pin and the framing pulse on the TSFS[1] pin.

TMUX:

= 0: The Transmit System Interface of the device is operated in the Non-multiplexed mode.
= 1: The Transmit System Interface of the device is operated in the Multiplexed mode.

E1 Transmit Jitter Attenuation Configuration (021H, 121H, 221H, 321H)

Bit No.	7	6	5	4	3	2	1	0
Bit Name	Reserved		TJITT_TEST	TJA_LIMT	TJA_E	TJA_DP1	TJA_DP0	TJA_BW
Type			R/W	R/W	R/W	R/W	R/W	R/W
Default			0	0	0	0	0	0

TJITT_TEST:

= 0: The real time interval between the read and write pointer of the FIFO is indicated in the TJITT[6:0] bits (b6~0, E1-038H,...). That is, the current interval between the read and write pointer of the FIFO will be written into the TJITT[6:0] bits (b6~0, E1-038H,...).

= 1: The peak-peak interval between the read and write pointer of the FIFO is indicated in the TJITT[6:0] bits (b6~0, E1-038H,...). That is, the current interval is compared with the old one in the TJITT[6:0] bits (b6~0, E1-038H,...) and the larger one will be indicated by the TJITT[6:0] bits (b6~0, E1-038H,...); otherwise, the value in the TJITT[6:0] bits (b6~0, E1-038H,...) is not changed.

TJA_LIMT:

When the read and write pointer of the FIFO are within 2/3/4 bits (corresponding to the FIFO depth) of overflowing or underflowing, the bandwidth of the JA can be widened to track the short term input jitter, thereby avoiding data corruption. This bit selects whether the bandwidth is normal or widened.

= 0: Normal bandwidth is selected.

= 1: Widen bandwidth is selected. In this case, the JA will not attenuate the input jitter until the read/write pointer's position is outside the 2/3/4 bits window.

TJA_E:

= 0: Disable the Transmit Jitter Attenuator.

= 1: Enable the Transmit Jitter Attenuator.

TJA_DP[1:0]:

These two bits select the Jitter Attenuation Depth.

= 00: The Jitter Attenuation Depth is 128-bit.

= 01: The Jitter Attenuation Depth is 64-bit.

= 10 / 11: The Jitter Attenuation Depth is 32-bit.

TJA_BW:

This bit select the Jitter Transfer Function Bandwidth.

= 0: 6.77 Hz.

= 1: 0.87 Hz.

E1 Transmit Configuration 0 (022H, 122H, 222H, 322H)

Bit No.	7	6	5	4	3	2	1	0
Bit Name	Reserved			T_OFF	Reserved			T_MD
Type				R/W				R/W
Default				0				0

T_OFF:

= 0: The transmit path is power up.

= 1: The transmit path is power down. The Line Driver is in high impedance.

T_MD:

This bit selects the line code rule to encode the data stream to be transmitted.

= 0: The HDB3 encoder is selected.

= 1: The AMI encoder is selected.

E1 Transmit Configuration 1 (023H, 123H, 223H, 323H)

Bit No.	7	6	5	4	3	2	1	0
Bit Name	Reserved		DFM_ON	T_HZ	PULS3	PULS2	PULS1	PULS0
Type			R/W	R/W	R/W	R/W	R/W	R/W
Default			0	1	0	0	0	0

DFM_ON:
= 0: The Driver Failure Monitor is disabled.
= 1: The Driver Failure Monitor is enabled.

T_HZ:
= 0: The Line Driver works normally.
= 1: Set the Line Driver High-Z. (The other parts of the transmit path still work normally.)

PULS[3:0]:
These bits determine the template shapes for short/long haul transmission:

PULS[3:0]	Transmit Clock	Cable Impedance
0000	2.048 MHz	75 Ω (in internal impedance matching mode) / Reserved (in external impedance matching mode)
0001	2.048 MHz	120 Ω (in internal impedance matching mode) / 75 Ω & 120 Ω (in external impedance matching mode)
0010	Reserved	
0011		
0100		
0101		
0110		
0111		
1000		
1001		
1010		
1011		
11xx	Arbitrary waveform setting.	

E1 Transmit Configuration 2 (024H, 124H, 224H, 324H)

Bit No.	7	6	5	4	3	2	1	0
Bit Name	Reserved		SCAL5	SCAL4	SCAL3	SCAL2	SCAL1	SCAL0
Type			R/W	R/W	R/W	R/W	R/W	R/W
Default			1	0	0	0	0	1

SCAL[5:0]:

The following setting lists the standard value of normal amplitude in different operating modes. Each step change (one increasing or decreasing from the standard value) will scale the amplitude of the D/A output by a certain offset. These bits are only effective when user programmable arbitrary waveform is used.

= 100001: Normal amplitude in E1 - 75 Ω & 120 Ω operating modes. Each step change scales about 3% offset.

E1 Transmit Configuration 3 (025H, 125H, 225H, 325H)

Bit No.	7	6	5	4	3	2	1	0
Bit Name	DONE	RW	UI1	UI0	SAMP3	SAMP2	SAMP1	SAMP0
Type	R/W	R/W	R/W	R/W	R/W	R/W	R/W	R/W
Default	0	0	0	0	0	0	0	0

This register is valid when the PULS[3:0] bits (b3~0, E1-023H,...) are set to '11xx'.

DONE:
= 0: Disable the read/write operation to the pulse template RAM.
= 1: Enable the read/write operation to the pulse template RAM.

RW:
= 0: Write the data to the pulse template RAM.
= 1: Read the data to the pulse template RAM.

UI[1:0]:
These bits specify one Unit Interval (UI) address.
= 00: UI addressed 0 is specified.
= 01: UI addressed 1 is specified.
= 10: UI addressed 2 is specified.
= 11: UI addressed 3 is specified.

SAMP[3:0]:
There bits specify one sample address. There are 16 samples in each UI.

SAMP[3:0]	Specified Sample Address	SAMP[3:0]	Specified Sample Address
0000	0	1000	8
0001	1	1001	9
0010	2	1010	10
0011	3	1011	11
0100	4	1100	12
0101	5	1101	13
0110	6	1110	14
0111	7	1111	15

E1 Transmit Configuration 4 (026H, 126H, 226H, 326H)

Bit No.	7	6	5	4	3	2	1	0
Bit Name	Reserved	WDAT6	WDAT5	WDAT4	WDAT3	WDAT2	WDAT1	WDAT0
Type		R/W	R/W	R/W	R/W	R/W	R/W	R/W
Default		0	0	0	0	0	0	0

WDAT[6:0]:

These bits contain the data to be stored in the pulse template RAM which is addressed by the UI[1:0] bits (b5~4, E1-025H,...) and the SAMP[3:0] bits (b3~0, E1-025H,...).

E1 Receive Jitter Attenuation Configuration (027H, 127H, 227H, 327H)

Bit No.	7	6	5	4	3	2	1	0
Bit Name	Reserved		RJITT_TEST	RJA_LIMT	RJA_E	RJA_DP1	RJA_DP0	RJA_BW
Type			R/W	R/W	R/W	R/W	R/W	R/W
Default			0	0	0	0	0	0

RJITT_TEST:

= 0: The real time interval between the read and write pointer of the FIFO is indicated in the RJITT[6:0] bits (b6~0, E1-039H,...). That is, the current interval between the read and write pointer of the FIFO will be written into the RJITT[6:0] bits (b6~0, E1-039H,...).

= 1: The peak-peak interval between the read and write pointer of the FIFO is indicated in the RJITT[6:0] bits (b6~0, E1-039H,...). That is, the current interval is compared with the old one in the RJITT[6:0] bits (b6~0, E1-039H,...) and the larger one will be indicated by the RJITT[6:0] bits (b6~0, E1-039H,...); otherwise, the value in the RJITT[6:0] bits (b6~0, E1-039H,...) is not changed.

RJA_LIMT:

When the read and write pointer of the FIFO are within 2/3/4 bits (corresponding to the FIFO depth) of overflowing or underflowing, the bandwidth of the JA can be widened to track the short term input jitter, thereby avoiding data corruption. This bit selects whether the bandwidth is normal or widened.

= 0: Normal bandwidth is selected.

= 1: Widen bandwidth is selected. In this case, the JA will not attenuate the input jitter until the read/write pointer's position is outside the 2/3/4 bits window.

RJA_E:

= 0: Disable the Receive Jitter Attenuator.

= 1: Enable the Receive Jitter Attenuator.

RJA_DP[1:0]:

These two bits select the Jitter Attenuation Depth.

= 00: The Jitter Attenuation Depth is 128-bit.

= 01: The Jitter Attenuation Depth is 64-bit.

= 10 / 11: The Jitter Attenuation Depth is 32-bit.

RJA_BW:

This bit select the Jitter Transfer Function Bandwidth.

= 0: 6.77 Hz.

= 1: 0.87 Hz.

E1 Receive Configuration 0 (028H, 128H, 228H, 328H)

Bit No.	7	6	5	4	3	2	1	0
Bit Name	Reserved			R_OFF	Reserved			R_MD
Type				R/W				R/W
Default				0				0

R_OFF:

= 0: The receive path is power up.

= 1: The receive path is power down.

R_MD:

This bit selects the line code rule to decode the received data stream.

= 0: The HDB3 decoder is selected.

= 1: The AMI decoder is selected.

E1 Receive Configuration 1 (029H, 129H, 229H, 329H)

Bit No.	7	6	5	4	3	2	1	0
Bit Name	Reserved	EQ_ON	Reserved	LOS4	LOS3	LOS2	LOS1	LOS0
Type		R/W		R/W	R/W	R/W	R/W	R/W
Default		0		1	0	1	0	1

EQ_ON:

= 0: The Equalizer is off in short haul applications.

= 1: The Equalizer is on in long haul applications.

LOS[4:0]:

A LOS is detected when the incoming signals has “no transitions”, i.e., when the signal level is less than Q dB below nominal for N consecutive pulse intervals. In long haul applications, these bits select the LOS declare threshold (Q). These bits are invalid in short haul applications.

LOS[4:0]	LOS Declare Threshold (Q)	LOS[4:0]	LOS Declare Threshold (Q)
00000	-4 dB	01100	-28 dB
00001	-6 dB	01101	-30 dB
00010	-8 dB	01110	-32 dB
00011	-10 dB	01111	-34 dB
00100	-12 dB	10000	-36 dB
00101	-14 dB	10001	-38 dB
00110	-16 dB	10010	-40 dB
00111	-18 dB	10011	-42 dB
01000	-20 dB	10100	-44 dB
01001	-22 dB	10101	-46 dB
01010	-24 dB	10110 - 11111	-48 dB
01011	-26 dB		

E1 Receive Configuration 2 (02AH, 12AH, 22AH, 32AH)

Bit No.	7	6	5	4	3	2	1	0
Bit Name	Reserved		SLICE1	SLICE0	UPDW1	UPDW0	MG1	MG0
Type			R/W	R/W	R/W	R/W	R/W	R/W
Default			0	1	1	0	0	0

SLICE[1:0]:

These two bits define the Data Slicer threshold.

= 00: The Data Slicer generates a mark if the voltage on the RTIPn/RRINGn pins exceeds 40% of the peak amplitude.

= 01: The Data Slicer generates a mark if the voltage on the RTIPn/RRINGn pins exceeds 50% of the peak amplitude.

= 10: The Data Slicer generates a mark if the voltage on the RTIPn/RRINGn pins exceeds 60% of the peak amplitude.

= 11: The Data Slicer generates a mark if the voltage on the RTIPn/RRINGn pins exceeds 70% of the peak amplitude.

UPDW[1:0]:

These two bits select the observation period, during which the peak value of the incoming signals are measured.

= 00: The observation period is 32 bits.

= 01: The observation period is 64 bits.

= 10: The observation period is 128 bits.

= 11: The observation period is 256 bits.

MG[1:0]:

These two bits select the Monitor Gain.

= 00: The Monitor Gain is 0 dB.

= 01: The Monitor Gain is 22 dB.

= 10: The Monitor Gain is 26 dB.

= 11: The Monitor Gain is 32 dB.

E1 Maintenance Function Control 0 (02BH, 12BH, 22BH, 32BH)

Bit No.	7	6	5	4	3	2	1	0
Bit Name	Reserved	DLLP	SLLP	SRLP	Reserved	RLP	ALP	DLP
Type		R/W	R/W	R/W		R/W	R/W	R/W
Default		0	0	0		0	0	0

DLLP:
= 0: Disable the Local Digital Loopback 1.
= 1: Enable the Local Digital Loopback 1.

SLLP:
= 0: Disable the System Local Loopback.
= 1: Enable the System Local Loopback.

SRLP:
= 0: Disable the System Remote Loopback.
= 1: Enable the System Remote Loopback.

RLP:
= 0: Disable the Remote Loopback.
= 1: Enable the Remote Loopback.

ALP:
= 0: Disable the Analog Loopback.
= 1: Enable the Analog Loopback.

DLP:
= 0: Disable the Local Digital Loopback 2.
= 1: Enable the Local Digital Loopback 2.

E1 Maintenance Function Control 1 (02CH, 12CH, 22CH, 32CH)

Bit No.	7	6	5	4	3	2	1	0
Bit Name	Reserved					LAC	RAISE	ATAO
Type						R/W	R/W	R/W
Default						0	0	0

LAC:

This bit selects the LOS criteria.

= 0: The G.775 is selected. In short haul application, the LOS is declared when the incoming signal level is less than 800 mVpp for 32 consecutive bit intervals and is cleared when the incoming signal level is greater than 1 Vpp and has an average mark density of at least 12.5% and less than 16 consecutive zeros in 32 consecutive bit periods. In long haul application, the LOS is declared when the incoming signal level is less than Q dB below nominal (set in the LOS[4:0] bits (b4~0, E1-029H,...)) for 32 consecutive bit intervals and is cleared when the incoming signal level is greater than (Q + 4 dB) and has an average mark density of at least 12.5% and less than 16 consecutive zeros in 32 consecutive bit periods.

= 1: The I.431/ETSI is selected. In short haul application, the LOS is declared when the incoming signal level is less than 800 mVpp for 2048 consecutive bit intervals and is cleared when the incoming signal level is greater than 1 Vpp and has an average mark density of at least 12.5% and less than 16 consecutive zeros in 32 consecutive bit periods. In long haul application, the LOS is declared when the incoming signal level is less than Q dB below nominal (set in the LOS[4:0] bits (b4~0, E1-029H,...)) for 2048 consecutive bit intervals and is cleared when the incoming signal level is greater than (Q + 4 dB) and has an average mark density of at least 12.5% and less than 16 consecutive zeros in 32 consecutive bit periods.

RAISE:

This bit determines whether all ‘One’s can be inserted in the receive path when the LOS is detected.

= 0: Disable the insertion.

= 1: Enable the insertion.

ATAO:

This bit determines whether all ‘One’s can be inserted in the transmit path when the LOS is detected in the receive path.

= 0: Disable the insertion.

= 1: Enable the insertion.

E1 Maintenance Function Control 2 (031H, 131H, 231H, 331H)

Bit No.	7	6	5	4	3	2	1	0
Bit Name	Reserved	BPV_INS	Reserved	EXZ_DEF	EXZ_ERR1	EXZ_ERR0	CNT_MD	CNT_TRF
Type		R/W		R/W	R/W	R/W	R/W	R/W
Default		0		0	0	0	0	0

BPV_INS:

A transition from ‘0’ to ‘1’ on this bit generates a single Bipolar Violation (BPV) Error to be inserted to the data stream to be transmitted.

This bit must be cleared and set again for the next BPV error insertion.

EXZ_DEF:

This bit selects the Excessive Zero (EXZ) Error criteria.

= 0: The ANSI is selected. In AMI line code rule, the EXZ error is defined as more than 15 consecutive zeros in the data stream. In HDB3 line code rule, the EXZ error is defined as more than 3 consecutive zeros in the data stream.

= 1: The FCC is selected. In AMI line code rule, the EXZ error is defined as more than 80 consecutive zeros in the data stream. In HDB3 line code rule, the EXZ error is defined as more than 3 consecutive zeros in the data stream.

EXZ_ERR[1:0]:

These bits must be set to ‘01’ to enable the Excessive Zero (EXZ) Error event to be counted in an internal 16-bit EXZ counter.

CNT_MD:

= 0: The Manual Report mode is selected. The internal 16-bit EXZ counter transfers its content to the EXZ Error Counter L-Byte & H-Byte registers when there is a transition from ‘0’ to ‘1’ on the CNT_TRF bit.

= 1: The Auto Report mode is selected. The internal 16-bit EXZ counter transfers its content to the EXZ Error Counter L-Byte & H-Byte registers every one second automatically.

CNT_TRF:

This bit is valid when the CNT_MD bit is ‘0’.

A transition from ‘0’ to ‘1’ on this bit updates the content in the EXZ Error Counter L-Byte & H-Byte registers with the value in the internal 16-bit EXZ counter.

This bit must be cleared and set again for the next updating.

E1 Transmit And Receive Termination Configuration (032H, 132H, 232H, 332H)

Bit No.	7	6	5	4	3	2	1	0
Bit Name	Reserved		T_TERM2	T_TERM1	T_TERM0	R_TERM2	R_TERM1	R_TERM0
Type			R/W	R/W	R/W	R/W	R/W	R/W
Default			0	0	0	1	1	1

T_TERM[2:0]:

These bits select the internal impedance of the transmit path to match the cable impedance:
= 000: The 75 Ω internal impedance matching is selected.
= 001: The 120 Ω internal impedance matching is selected.
(The above two values are the standard value for E1 mode).
= 010: The 100 Ω internal impedance matching is selected.
= 011: The 110 Ω internal impedance matching is selected.
= 1xx: The internal impedance matching is bypassed, and external impedance circuit should be used.

R_TERM[2:0]:

These bits select the internal impedance of the receive path to match the cable impedance:
= 000: The 75 Ω internal impedance matching is selected.
= 001: The 120 Ω internal impedance matching is selected.
(The above two values are the standard values for E1 mode).
= 010: The 100 Ω internal impedance matching is selected.
= 011: The 110 Ω internal impedance matching is selected.
= 1xx: The internal impedance matching is bypassed, and external impedance circuit should be used.

E1 Interrupt Enable Control 0 (033H, 133H, 233H, 333H)

Bit No.	7	6	5	4	3	2	1	0
Bit Name	Reserved					DF_IE	Reserved	LOS_IE
Type						R/W		R/W
Default						0		0

DF_IE:

= 0: Disable the interrupt on the $\overline{INT}$ pin when the DF_IS bit (b2, E1-03AH,...) is ‘1’.
= 1: Enable the interrupt on the $\overline{INT}$ pin when the DF_IS bit (b2, E1-03AH,...) is ‘1’.

LOS_IE:

= 0: Disable the interrupt on the $\overline{INT}$ pin when the LOS_IS bit (b0, E1-03AH,...) is ‘1’.
= 1: Enable the interrupt on the $\overline{INT}$ pin when the LOS_IS bit (b0, E1-03AH,...) is ‘1’.

E1 Interrupt Enable Control 1 (034H, 134H, 234H, 334H)

Bit No.	7	6	5	4	3	2	1	0
Bit Name	Reserved	DAC_IE	TJA_IE	RJA_IE	Reserved	EXZ_IE	CV_IE	CNT_IE
Type		R/W	R/W	R/W		R/W	R/W	R/W
Default		0	0	0		0	0	0

DAC_IE:
= 0: Disable the interrupt on the $\overline{INT}$ pin when the DAC_IS bit (b6, E1-03BH,...) is '1'.
= 1: Enable the interrupt on the $\overline{INT}$ pin when the DAC_IS bit (b6, E1-03BH,...) is '1'.

TJA_IE:
= 0: Disable the interrupt on the $\overline{INT}$ pin when the TJA_IS bit (b5, E1-03BH,...) is '1'.
= 1: Enable the interrupt on the $\overline{INT}$ pin when the TJA_IS bit (b5, E1-03BH,...) is '1'.

RJA_IE:
= 0: Disable the interrupt on the $\overline{INT}$ pin when the RJA_IS bit (b4, E1-03BH,...) is '1'.
= 1: Enable the interrupt on the $\overline{INT}$ pin when the RJA_IS bit (b4, E1-03BH,...) is '1'.

EXZ_IE:
= 0: Disable the interrupt on the $\overline{INT}$ pin when the EXZ_IS bit (b2, E1-03BH,...) is '1'.
= 1: Enable the interrupt on the $\overline{INT}$ pin when the EXZ_IS bit (b2, E1-03BH,...) is '1'.

CV_IE:
= 0: Disable the interrupt on the $\overline{INT}$ pin when the CV_IS bit (b1, E1-03BH,...) is '1'.
= 1: Enable the interrupt on the $\overline{INT}$ pin when the CV_IS bit (b1, E1-03BH,...) is '1'.

CNT_IE:
= 0: Disable the interrupt on the $\overline{INT}$ pin when the CNTOV_IS bit (b0, E1-03BH,...) is '1'.
= 1: Enable the interrupt on the $\overline{INT}$ pin when the CNTOV_IS bit (b0, E1-03BH,...) is '1'.

E1 Interrupt Trigger Edges Select (035H, 135H, 235H, 335H)

Bit No.	7	6	5	4	3	2	1	0
Bit Name	Reserved					DF_IES	Reserved	LOS_IES
Type						R/W		R/W
Default						0		0

DF_IES:

= 0: The DF_IS bit (b2, E1-03AH,...) will be set to ‘1’ when there is a transition from ‘0’ to ‘1’ on the DF_S bit (b2, E1-036H,...).

= 1: The DF_IS bit (b2, E1-03AH,...) will be set to ‘1’ when there is any transition from ‘0’ to ‘1’ or from ‘1’ to ‘0’ on the DF_S bit (b2, E1-036H,...).

LOS_IES:

= 0: The LOS_IS bit (b0, E1-03AH,...) will be set to ‘1’ when there is a transition from ‘0’ to ‘1’ on the LOS_S bit (b0, E1-036H,...).

= 1: The LOS_IS bit (b0, E1-03AH,...) will be set to ‘1’ when there is any transition from ‘0’ to ‘1’ or from ‘1’ to ‘0’ on the LOS_S bit (b0, E1-036H,...).

E1 Line Status Register 0 (036H, 136H, 236H, 336H)

Bit No.	7	6	5	4	3	2	1	0
Bit Name	Reserved					DF_S	Reserved	LOS_S
Type						R		R
Default						0		0

DF_S:

= 0: No transmit driver failure is detected.

= 1: Transmit driver failure is detected.

LOS_S:

= 0: No LOS is detected.

= 1: Loss of signal (LOS) is detected.

E1 Line Status Register 1 (037H, 137H, 237H, 337H)

Bit No.	7	6	5	4	3	2	1	0
Bit Name	Reserved			LATT4	LATT3	LATT2	LATT1	LATT0
Type				R	R	R	R	R
Default				0	0	0	0	0

LATT[4:0]:

These bits indicate the current gain of the VGA relative to 3 V peak pulse level.

LATT[4:0]	Gain (dB)	LATT[4:0]	Gain (dB)
00000	0 - 2	01011	22 - 24
00001	2 - 4	01100	24 - 26
00010	4 - 6	01101	26 - 28
00011	6 - 8	01110	28 - 30
00100	8 - 10	01111	30 - 32
00101	10 - 12	10000	32 - 34
00110	12 - 14	10001	34 - 36
00111	14 - 16	10010	36 - 38
01000	16 - 18	10011	38 - 40
01001	18 - 20	10100	40 - 42
01010	20 - 22	10101 ~ 11111	42 - 44

E1 Transmit Jitter Measure Value Indication (038H, 138H, 238H, 338H)

Bit No.	7	6	5	4	3	2	1	0
Bit Name	Reserved	TJITT6	TJITT5	TJITT4	TJITT3	TJITT2	TJITT1	TJITT0
Type		R	R	R	R	R	R	R
Default		0	0	0	0	0	0	0

TJITT[6:0]:

When the TJITT_TEST bit (b5, E1-021H,...) is ‘0’, these bits represent the current interval between the read and write pointer of the FIFO.

When the TJITT_TEST bit (b5, E1-021H,...) is ‘1’, these bits represent the P-P interval between the read and write pointer of the FIFO since last read.

These bits will be cleared if a ’1’ is written to the register.

E1 Receive Jitter Measure Value Indication (039H, 139H, 239H, 339H)

Bit No.	7	6	5	4	3	2	1	0
Bit Name	Reserved	RJITT6	RJITT5	RJITT4	RJITT3	RJITT2	RJITT1	RJITT0
Type		R	R	R	R	R	R	R
Default		0	0	0	0	0	0	0

RJITT[6:0]:

When the RJITT_TEST bit (b5, E1-027H,...) is ‘0’, these bits represent the current interval between the read and write pointer of the FIFO.

When the RJITT_TEST bit (b5, E1-027H,...) is ‘1’, these bits represent the P-P interval between the read and write pointer of the FIFO since last read.

These bits will be cleared if a ’1’ is written to the register.

E1 Interrupt Status 0 (03AH, 13AH, 23AH, 33AH)

Bit No.	7	6	5	4	3	2	1	0
Bit Name	Reserved					DF_IS	Reserved	LOS_IS
Type						R		R
Default						0		0

DF_IS:

= 0: There is no status change on the DF_S bit (b2, E1-036H,...).

= 1: When the DF_IES bit (b2, E1-035H,...) is ‘0’, the ‘1’ on this bit indicates there is a transition from ‘0’ to ‘1’ on the DF_S bit (b2, E1-036H,...); when the DF_IES bit (b2, E1-035H,...) is ‘1’, the ‘1’ on this bit indicates there is a transition from ‘0’ to ‘1’ or from ‘1’ to ‘0’ on the DF_S bit (b2, E1-036H,...).

This bit will be cleared if a ’1’ is written to it.

LOS_IS:

= 0: There is no status change on the LOS_S bit (b0, E1-036H,...).

= 1: When the LOS_IES bit (b0, E1-035H,...) is ‘0’, the ‘1’ on this bit indicates there is a transition from ‘0’ to ‘1’ on the LOS_S bit (b0, E1-036H,...); when the LOS_IES bit (b0, E1-035H,...) is ‘1’, the ‘1’ on this bit indicates there is a transition from ‘0’ to ‘1’ or from ‘1’ to ‘0’ on the LOS_S bit (b0, E1-036H,...).

This bit will be cleared if a ’1’ is written to it.

E1 Interrupt Status 1 (03BH, 13BH, 23BH, 33BH)

Bit No.	7	6	5	4	3	2	1	0
Bit Name	Reserved	DAC_IS	TJA_IS	RJA_IS	Reserved	EXZ_IS	CV_IS	CNTOV_IS
Type		R	R	R		R	R	R
Default		0	0	0		0	0	0

DAC_IS:

= 0: The sum of a pulse template does not exceed the D/A limitation (±63) when more than one UI is used to compose the arbitrary pulse template.

= 1: The sum of a pulse template exceeds the D/A limitation (±63) when more than one UI is used to compose the arbitrary pulse template.

This bit will be cleared if a ’1’ is written to it.

TJA_IS:

= 0: The transmit JA FIFO has not overflowed or underflowed.

= 1: The transmit JA FIFO has overflowed or underflowed.

This bit will be cleared if a ’1’ is written to it.

RJA_IS:

= 0: The receive JA FIFO has not overflowed or underflowed.

= 1: The receive JA FIFO has overflowed or underflowed.

This bit will be cleared if a ’1’ is written to it.

EXZ_IS:

= 0: No Excessive Zero (EXZ) Error is detected.

= 1: The Excessive Zero (EXZ) Error is detected.

This bit will be cleared if a ’1’ is written to it.

CV_IS:

= 0: No Bipolar Violation (BPV) Error or HDB3 Code Violation (CV) Error is detected.

= 1: The Bipolar Violation (BPV) Error or HDB3 Code Violation (CV) Error is detected.

This bit will be cleared if a ’1’ is written to it.

CNTOV_IS:

= 0: The internal 16-bit EXZ counter has not overflowed.

= 1: The internal 16-bit EXZ counter has overflowed.

This bit will be cleared if a ‘1’ is written to it.

E1 EXZ Error Counter H-Byte (03CH, 13CH, 23CH, 33CH)

Bit No.	7	6	5	4	3	2	1	0
Bit Name	CNTH[7]	CNTH[6]	CNTH[5]	CNTH[4]	CNTH[3]	CNTH[2]	CNTH[1]	CNTH[0]
Type	R	R	R	R	R	R	R	R
Default	0	0	0	0	0	0	0	0

CNTH[7:0]:

These bits, together with the CNTL[7:0] bits, reflect the content in the internal 16-bit EXZ counter.

E1 EXZ Error Counter L-Byte (03DH, 13DH, 23DH, 33DH)

Bit No.	7	6	5	4	3	2	1	0
Bit Name	CNTL[7]	CNTL[6]	CNTL[5]	CNTL[4]	CNTL[3]	CNTL[2]	CNTL[1]	CNTL[0]
Type	R	R	R	R	R	R	R	R
Default	0	0	0	0	0	0	0	0

CNTL[7:0]:

These bits, together with the CNTH[7:0] bits, reflect the content in the internal 16-bit EXZ counter.

E1 Reference Clock Output Control (03EH, 13EH, 23EH, 33EH)

Bit No.	7	6	5	4	3	2	1	0
Bit Name	Reserved							REFH_LOS
Type								R/W
Default								0

REFH_LOS:

In case of LOS, this bit determines the outputs on the REFA_OUT and REFB_OUT pins.

= 0: Output MCLK.

= 1: Output high level.

E1 Interrupt Module Indication 2 (03FH, 13FH, 23FH, 33FH)

Bit No.	7	6	5	4	3	2	1	0
Bit Name	Reserved							LIU
Type								R
Default								0

LIU:

= 0: No interrupt is generated in the Receive / Transmit Internal Termination, Adaptive Equalizer, Data Slicer, CLK&Data Recovery, Receive / Transmit Jitter Attenuator, B8ZS/HDB3/AMI Decoder / Encoder, Waveform Shaper / Line Build Out or Line Driver block.

= 1: Interrupt is generated in the Receive / Transmit Internal Termination, Adaptive Equalizer, Data Slicer, CLK&Data Recovery, Receive / Transmit Jitter Attenuator, B8ZS/HDB3/AMI Decoder / Encoder, Waveform Shaper / Line Build Out or Line Driver function block.

E1 Interrupt Module Indication 0 (040H, 140H, 240H, 340H)

Bit No.	7	6	5	4	3	2	1	0
Bit Name	Reserved		ALARM	PMON	PRGD	RCRB	FGEN	FRMR
Type			R	R	R	R	R	R
Default			0	0	0	0	0	0

ALARM:

= 0: No interrupt is generated in the Alarm Detector function block.

= 1: Interrupt is generated in the Alarm Detector function block.

PMON:

= 0: No interrupt is generated in the Performance Monitor function block.

= 1: Interrupt is generated in the Performance Monitor function block.

PRGD:

= 0: No interrupt is generated in the PRBS Generator / Detector function block.

= 1: Interrupt is generated in the PRBS Generator / Detector function block.

RCRB:

= 0: No interrupt is generated in the Receive CAS/RBS Buffer function block.

= 1: Interrupt is generated in the Receive CAS/RBS Buffer function block.

FGEN:

= 0: No interrupt is generated in the Frame Generator function block.

= 1: Interrupt is generated in the Frame Generator function block.

FRMR:

= 0: No interrupt is generated in the Frame Processor function block.

= 1: Interrupt is generated in the Frame Processor function block.

E1 Interrupt Module Indication 1 (041H, 141H, 241H, 341H)

Bit No.	7	6	5	4	3	2	1	0
Bit Name	THDLC3	THDLC2	THDLC1	RHDLC3	RHDLC2	RHDLC1	ELST	TRSI/RESI
Type	R	R	R	R	R	R	R	R
Default	0	0	0	0	0	0	0	0

THDLC3:
= 0: No interrupt is generated in the HDLC Transmitter #3 function block.
= 1: Interrupt is generated in the HDLC Transmitter #3 function block.

THDLC2:
= 0: No interrupt is generated in the HDLC Transmitter #2 function block.
= 1: Interrupt is generated in the HDLC Transmitter #2 function block.

THDLC1:
= 0: No interrupt is generated in the HDLC Transmitter #1 function block.
= 1: Interrupt is generated in the HDLC Transmitter #1 function block.

RHDLC3:
= 0: No interrupt is generated in the HDLC Receiver #3 function block.
= 1: Interrupt is generated in the HDLC Receiver #3 function block.

RHDLC2:
= 0: No interrupt is generated in the HDLC Receiver #2 function block.
= 1: Interrupt is generated in the HDLC Receiver #2 function block.

RHDLC1:
= 0: No interrupt is generated in the HDLC Receiver #1 function block.
= 1: Interrupt is generated in the HDLC Receiver #1 function block.

ELST:
= 0: No interrupt is generated in the Elastic Store Buffer function block.
= 1: Interrupt is generated in the Elastic Store Buffer function block.

TRSI/RESI:
= 0: No interrupt is generated in the Transmit / Receive System Interface function block.
= 1: Interrupt is generated in the Transmit / Receive System Interface function block.

E1 TBIF Option Register (042H, 142H, 242H, 342H)

Bit No.	7	6	5	4	3	2	1	0
Bit Name	Reserved			DE	FE	CMS	FSINV	FSTYP
Type				R/W	R/W	R/W	R/W	R/W
Default				0	0	0	0	0

DE:

This bit selects the active edge of TSCKn to sample the data on TSDn and TSIGn and the active edge of MTSCK to sample the data on MTSDA (MTSDB) and MTSIGA (MTSIGB).

= 0: The falling edge is selected.

= 1: The rising edge is selected.

In Transmit Multiplexed mode, the bit of the four links should be set to the same value.

FE:

This bit selects the active edge of TSCKn to update/sample the pulse on TSFSn and the active edge of MTSCK to sample the pulse on MTSFS.

= 0: The falling edge is selected.

= 1: The rising edge is selected.

In Transmit Multiplexed mode, the bit of the four links should be set to the same value.

CMS:

This bit is valid in Transmit Clock Slave mode and Transmit Multiplexed mode.

= 0: The speed of TSCKn/MTSCK is the same as the data rate on the system side (2.048 Mb/s / 8.192 Mb/s).

= 1: The speed of TSCKn/MTSCK is double the data rate on the system side (4.096 Mb/s / 16.384 Mb/s).

In Transmit Clock Slave mode, if all four links use TSCK[1] and TSFS[1] to input the data (i.e., the TSLVCK bit (b, T1/J1-01H) is set to ‘1’), the bit of the four links should be set to the same value.

In Transmit Multiplexed mode, the bit of the four links should be set to the same value.

FSINV:

= 0: The transmit framing pulse TSFSn is active high.

= 1: The transmit framing pulse TSFSn is active low.

In Transmit Multiplexed mode, this bit of the four links should be set to the same value.

FSTYP:

= 0: In Transmit Non-multiplexed mode, TSFSn pulses during the first bit of each Basic frame. In Transmit Multiplexed mode, MTSFS pulses during the first bit of each Basic frame of the first link.

= 1: In Transmit Non-multiplexed mode, if the CRC Multi-frame is to be generated, TSFSn pulses during the first bit of each CRC Multi-frame; if the Signaling Multi-frame is to be generated, TSFSn pulses during the first bit of each Signaling Multi-frame; if both the CRC Multi-frame and the Signaling Multi-frame are to be generated, TSFSn goes high/low during the first bit of each Signaling Multi-frame and goes the opposite during the second bit of each CRC Multi-frame. In Transmit Multiplexed mode, if the CRC Multi-frame is to be generated, MTSFS pulses during the first bit of each CRC Multi-frame of the first link; if the Signaling Multi-frame is to be generated, MTSFS pulses during the first bit of each Signaling Multi-frame of the first link; if both the CRC Multi-frame and the Signaling Multi-frame are to be generated, MTSFS goes high/low during the first bit of each Signaling Multi-frame and goes the opposite during the second bit of each CRC Multi-frame of the first link.

In Transmit Multiplexed mode, this bit of the four links should be set to the same value.

E1 TBIF Operating Mode (043H, 143H, 243H, 343H)

Bit No.	7	6	5	4	3	2	1	0
Bit Name	Reserved							TMODE
Type								R/W
Default								1

TMODE:

In Transmit Non-multiplexed mode, this bit selects the sub-mode.

= 0: The Transmit System Interface is operated in Transmit Clock Master mode. The timing signal for clocking the data and the framing pulse to align the data input on the TSDn pin are provided from the processed data from the device.

= 1: The Transmit System Interface is operated in Transmit Clock Slave mode. The timing signal for clocking the data and the framing pulse to align the data input on the TSDn pin are provided by the system side.

E1 TBIF TS Offset (044H, 144H, 244H, 344H)

Bit No.	7	6	5	4	3	2	1	0
Bit Name	Reserved	TSOFF6	TSOFF5	TSOFF4	TSOFF3	TSOFF2	TSOFF1	TSOFF0
Type		R/W	R/W	R/W	R/W	R/W	R/W	R/W
Default		0	0	0	0	0	0	0

TSOFF[6:0]:

These bits give a binary number to define the timeslot offset. The timeslot offset is between the framing pulse on the TSFSn/MTSFS pin and the start of the corresponding frame input on the TSDn/MTSDA(MTSDB) pin. The signaling bits on the TSIGn/MTSIGA(MTSIGB) pin are always per-timeslot aligned with the data on the TSDn/MTSDA(MTSDB) pin.

In Non-multiplexed mode, the timeslot offset can be configured from 0 to 31 timeslots (0 & 31 are included). In Multiplexed mode, the timeslot offset can be configured from 0 to 127 timeslots (0 & 127 are included).

E1 TBIF Bit Offset (045H, 145H, 245H, 345H)

Bit No.	7	6	5	4	3	2	1	0
Bit Name	Reserved				EDGE	BOFF2	BOFF1	BOFF0
Type					R/W	R/W	R/W	R/W
Default					0	0	0	0

EDGE:

This bit is valid when the CMS bit (b2, E1-042H,...) is ‘1’.

= 0: The first active edge of TSCKn/MTSCK is selected to sample the data on the TSDn/MTSDA(MTSDB) and TSIGn/MTSIGA(MTSIGB) pins.

= 1: The second active edge of TSCKn/MTSCK is selected to sample the data on the TSDn/MTSDA(MTSDB) and TSIGn/MTSIGA(MTSIGB) pins.

BOFF[2:0]:

These bits give a binary number to define the bit offset. The bit offset is between the framing pulse on the TSFSn/MTSFS pin and the start of the corresponding frame input on the TSDn/MTSDA(MTSDB) pin. The signaling bits on the TSIGn/MTSIGA(MTSIGB) pin are always per-timeslot aligned with the data on the TSDn/MTSDA(MTSDB) pin.

E1 RBIF Option Register (046H, 146H, 246H, 346H)

Bit No.	7	6	5	4	3	2	1	0
Bit Name	Reserved				DE	FE	CMS	TRI
Type					R/W	R/W	R/W	R/W
Default					1	1	0	1

DE:

This bit selects the active edge of RSCKn to update the data on RSDn and RSIGn and the active edge of MRSCK to update the data on MRSDA(MRSDB) and MRSIGA(MRSIGB).

= 0: The falling edge is selected.

= 1: The rising edge is selected.

In Receive Multiplexed mode, the bit of the four links should be set to the same value.

FE:

This bit selects the active edge of RSCKn to update/sample the pulse on RSFSn and the active edge of MRSCK to sample the pulse on MRSFS.

= 0: The falling edge is selected.

= 1: The rising edge is selected.

In Receive Multiplexed mode, the bit of the four links should be set to the same value.

CMS:

This bit is valid in Receive Clock Slave mode and Receive Multiplexed mode.

= 0: The speed of RSCKn/MRSCK is the same as the data rate on the system side (2.048 Mb/s / 8.192 Mb/s).

= 1: The speed of RSCKn/MRSCK is double the data rate on the system side (4.096 Mb/s / 16.384 Mb/s).

In Receive Clock Slave mode, if all four links use the RSCK[1] and RSFS[1] to output the data (i.e., the RSLVCK bit (b, E1-01H) is set to ‘1’), the bit of the four links should be set to the same value.

In Receive Multiplexed mode, the bit of the four links should be set to the same value.

TRI:

= 0: The processed data and signaling bits are output on the RSDn/MRSDA(MRSDB) and RSIGn/MRSIGA(MRSIGB) pins respectively.

= 1: The output on the RSDn/MRSDA(MRSDB) and RSIGn/MRSIGA(MRSIGB) pins are in high impedance.

E1 RBIF Mode (047H, 147H, 247H, 347H)

Bit No.	7	6	5	4	3	2	1	0
Bit Name	Reserved							RMODE
Type								R/W
Default								1

RMODE:

In Receive Non-multiplexed mode, this bit selects the sub-mode.

= 0: The Receive System Interface is operated in Receive Clock Master mode. The timing signal for clocking the data and the framing pulse to align the data output on the RSDn pin are received from each line side.

= 1: The Receive System Interface is operated in Receive Clock Slave mode. The timing signal for clocking the data and the framing pulse to align the data output on the RSDn pin are provided by the system side.

E1 RBIF Frame Pulse (048H, 148H, 248H, 348H)

Bit No.	7	6	5	4	3	2	1	0
Bit Name	Reserved			FSINV	OHD	SMFS	CMFS	Reserved
Type				R/W	R/W	R/W	R/W	
Default				0	0	0	0	

FSINV:

= 0: The receive framing pulse RSFSn is active high.

= 1: The receive framing pulse RSFSn is active low.

In Receive Multiplexed mode, this bit of the four links should be set to the same value.

OHD, SMFS, CMFS:

In Receive Clock Master mode, these bits select what the pulse on RSFSn indicates.

OHD	SMFS	CMFS	RSFSn Indication
0	0	0	The RSFSn pulses during the first bit of each Basic frame.
0	0	1	The RSFSn pulses during the first bit of each CRC Multi-frame.
0	1	0	The RSFSn pulses during the first bit of each Signaling Multi-frame.
0	1	1	The RSFSn goes high/low during the first bit of each Signaling Multi-frame and goes the opposite during the second bit of each CRC Multi-frame.
1	0	0	The RSFSn pulses during the TS0 and TS16.

E1 RBIF TS Offset (049H, 149H, 249H, 349H)

Bit No.	7	6	5	4	3	2	1	0
Bit Name	Reserved	TSOFF6	TSOFF5	TSOFF4	TSOFF3	TSOFF2	TSOFF1	TSOFF0
Type		R/W	R/W	R/W	R/W	R/W	R/W	R/W
Default		0	0	0	0	0	0	0

TSOFF[6:0]:

Except that in the Receive Master mode, when the OHD bit (b3, E1-048H,...), the SMFS bit (b2, E1-048H,...) and the CMFS bit (b1, E1-048H,...) are set to TS1 and TS16 overhead indication, the timeslot offset is supported in all the other conditions.

These bits give a binary number to define the timeslot offset. The timeslot offset is between the framing pulse on the RSFSn/MRSFS pin and the start of the corresponding frame output on the RSDn/MRSDA(MRSDB) pin. The signaling bits on the RSIGn/MRSIGA(MRSIGB) pin are always per-timeslot aligned with the data on the RSDn/MRSDA(MRSDB) pin.

In Non-multiplexed mode, the timeslot offset can be configured from 0 to 31 timeslots (0 & 31 are included). In Multiplexed mode, the timeslot offset can be configured from 0 to 127 timeslots (0 & 127 are included).

E1 RBIF Bit Offset (04AH, 14AH, 24AH, 34AH)

Bit No.	7	6	5	4	3	2	1	0
Bit Name	Reserved				EDGE	BOFF2	BOFF1	BOFF0
Type					R/W	R/W	R/W	R/W
Default					0	0	0	0

EDGE:

This bit is valid when the CMS bit (b1, E1-046H,...) is ‘1’.

= 0: The first active edge of RSCKn/MRSCK is selected to update the data on the RSDn/MRSDA(MRSDB) and RSIGn/MRSIGA(MRSIGB) pins.

= 1: The second active edge of RSCKn/MRSCK is selected to update the data on the RSDn/MRSDA(MRSDB) and RSIGn/MRSIGA(MRSIGB) pins.

BOFF[2:0]:

Except that in the Receive Master mode, when the OHD bit (b3, E1-048H,...), the SMFS bit (b2, E1-048H,...) and the CMFS bit (b1, E1-048H,...) are set to TS1 and TS16 overhead indication, the bit offset is supported in all the other conditions.

These bits give a binary number to define the bit offset. The bit offset is between the framing pulse on the RSFSn/MRSFS pin and the start of the corresponding frame output on the RSDn/MRSDA(MRSDB) pin. The signaling bits on the RSIGn/MRSIGA(MRSIGB) pin are always per-channel aligned with the data on the RSDn/MRSDA(MRSDB) pin.

E1 RTSFS Change Indication (04BH, 14BH, 24BH, 34BH)

Bit No.	7	6	5	4	3	2	1	0
Bit Name	Reserved						RCOFAI	TCOFAI
Type							R	R
Default							0	0

RCOFAI:

This bit is valid in Receive Clock Slave mode and Receive Multiplexed mode.
= 0: The interval of the pulses on the RSFSn/MRSFS pin is an integer multiple of 125 μs.
= 1: The interval of the pulses on the RSFSn/MRSFS pin is not an integer multiple of 125 μs.
This bit will be cleared if a '1' is written to it.

TCOFAI:

This bit is valid in Transmit Clock Slave mode and Transmit Multiplexed mode.
= 0: The pulse on the TSFSn/MTSFS pin is an integer multiple of 125 μs.
= 1: The pulse on the TSFSn/MTSFS pin is not an integer multiple of 125 μs.
This bit will be cleared if a '1' is written to it.

E1 RTSFS Interrupt Control (04CH, 14CH, 24CH, 34CH)

Bit No.	7	6	5	4	3	2	1	0
Bit Name	Reserved						RCOFAE	TCOFAE
Type							R/W	R/W
Default							0	0

RCOFAE:

= 0: Disable the interrupt on the $\overline{INT}$ pin when the RCOFAI bit (b1, E1-04BH,...) is '1'.
= 1: Enable the interrupt on the $\overline{INT}$ pin when the RCOFAI bit (b1, E1-04BH,...) is '1'.

TCOFAE:

= 0: Disable the interrupt on the $\overline{INT}$ pin when the TCOFAI bit (b0, E1-04BH,...) is '1'.
= 1: Enable the interrupt on the $\overline{INT}$ pin when the TCOFAI bit (b0, E1-04BH,...) is '1'.

E1 FRMR Mode 0 (04DH, 14DH, 24DH, 34DH)

Bit No.	7	6	5	4	3	2	1	0
Bit Name	Reserved				UNFM	REFCRCE	REFEN	REFR
Type					R/W	R/W	R/W	R/W
Default					0	1	1	0

UNFM:

= 0: The data stream is received in framed mode and is processed by the Frame Processor.

= 1: The data stream is received in unframed mode and the Frame Processor is bypassed.

REFCRCE:

= 0: disable from re-searching for synchronization when the Excessive CRC-4 Error occurs.

= 1: Search for synchronization again when the Excessive CRC-4 Error occurs. This function can only be implemented only if the REFEN bit is logic 1.

REFEN:

= 0: “Locked in frame”. Once the previous Basic frame synchronization is acquired, and no errors can lead to reframe except for manually setting by the REFR bit.

= 1: Search for Basic frame synchronization again when it is out of synchronization.

REFR:

A transition from logic 0 to logic 1 forces to re-search for a new Basic frame synchronization.

E1 FRMR Mode 1 (04EH, 14EH, 24EH, 34EH)

Bit No.	7	6	5	4	3	2	1	0
Bit Name	BIT2C	CASEN	CRCEN	CNTNFAS	WORDERR	TS16C	SMFASC	C2NCIWCK
Type	R/W	R/W	R/W	R/W	R/W	R/W	R/W	R/W
Default	1	1	1	0	0	0	0	0

BIT2C:

This bit determines the criteria of out of Basic frame synchronization.

= 0: 3 consecutive FAS pattern errors lead to out of Basic frame synchronization.

= 1: 3 consecutive FAS pattern errors or 3 consecutive NFAS errors lead to out of Basic frame synchronization.

CASEN:

= 0: Disable searching for the Channel Associated Signaling (CAS) Multi-Frame.

= 1: Enable searching for the Channel Associated Signaling (CAS) Multi-Frame after the Basic frame synchronization is acquired.

CRCEN:

= 0: Disable searching for the CRC Multi-Frame.

= 1: Enable searching for the CRC Multi-Frame after the Basic frame synchronization is acquired.

CNTNFAS & WORDERR:

These two bits determine the criteria of FAS/NFAS Bit/Pattern Error generation:

WORDERR	CNTNFAS	Error Generation
0	0	Each bit error in FAS is counted as an error event.
1	0	A FAS pattern error is counted as an error event.
0	1	Each bit error in FAS or NFAS error is counted as an error event.
1	1	A FAS pattern error or NFAS error is counted as an error event.

TS16C & SMFASC:

These two bits determine the criteria of out of CAS Signaling Multi-Frame synchronization:

TS16C	SMFASC	Out Of CAS Signaling Multi-Frame Synchronization Criteria
X	0	2 consecutive CAS Signaling Multi-Frame Alignment Pattern Errors occur.
0	1	2 consecutive CAS Signaling Multi-Frame Alignment Pattern Errors occur or all the contents in TS16 are zeros for one Signaling Multi-Frame.
1	1	2 consecutive CAS Signaling Multi-Frame Alignment Pattern Errors occur or all the contents in TS16 are zeros for two consecutive Signaling Multi-Frames.

C2NCIWCK:

= 0: Stop searching for CRC Multi-Frame alignment pattern in CRC to non-CRC interworking mode.

= 1: Enable searching for CRC Multi-Frame alignment pattern even if CRC to non-CRC interworking has been declared.

E1 FRMR Status (04FH, 14FH, 24FH, 34FH)

Bit No.	7	6	5	4	3	2	1	0
Bit Name	Reserved			C2NCIWV	OOSMFV	OOCMFV	OOOFV	OOFV
Type				R	R	R	R	R
Default				0	1	1	0	1

C2NCIWV:
= 0: The Frame Processor does not operate in CRC to non-CRC interworking mode.
= 1: The Frame Processor operates in CRC to non-CRC interworking mode.

OOSMFV:
= 0: The CAS Signaling Multi-Frame is in synchronization.
= 1: The CAS Signaling Multi-Frame is out of synchronization.

OOCMFV:
= 0: The CRC Multi-Frame is in synchronization.
= 1: The CRC Multi-Frame is out of synchronization.

OOOFV:
= 0: The offline Basic frame is in synchronization.
= 1: The offline Basic frame is out of synchronization.

OOFV:
= 0: The Basic frame is in synchronization.
= 1: The Basic frame is out of synchronization.

E1 FRMR Interrupt Control 0 (050H, 150H, 250H, 350H)

Bit No.	7	6	5	4	3	2	1	0
Bit Name	Reserved			C2NCIWE	OOSMFE	OOCMFE	OOOFE	OOFE
Type				R/W	R/W	R/W	R/W	R/W
Default				0	0	0	0	0

C2NCIWE:
= 0: Disable the interrupt on the $\overline{INT}$ pin when the C2NCIWI bit (b4, E1-052H,...) is ‘1’.
= 1: Enable the interrupt on the $\overline{INT}$ pin when the C2NCIWI bit (b4, E1-052H,...) is ‘1’.

OOSMFE:
= 0: Disable the interrupt on the $\overline{INT}$ pin when the OOSMFI bit (b3, E1-052H,...) is ‘1’.
= 1: Enable the interrupt on the $\overline{INT}$ pin when the OOSMFI bit (b3, E1-052H,...) is ‘1’.

OOCMFE:
= 0: Disable the interrupt on the $\overline{INT}$ pin when the OOCMFI bit (b2, E1-052H,...) is ‘1’.
= 1: Enable the interrupt on the $\overline{INT}$ pin when the OOCMFI bit (b2, E1-052H,...) is ‘1’.

OOOFE:
= 0: Disable the interrupt on the $\overline{INT}$ pin when the OOOFI bit (b1, E1-052H,...) is ‘1’.
= 1: Enable the interrupt on the $\overline{INT}$ pin when the OOOFI bit (b1, E1-052H,...) is ‘1’.

OOFE:
= 0: Disable the interrupt on the $\overline{INT}$ pin when the OOFI bit (b0, E1-052H,...) is ‘1’.
= 1: Enable the interrupt on the $\overline{INT}$ pin when the OOFI bit (b0, E1-052H,...) is ‘1’.

E1 FRMR Interrupt Control 1 (051H, 151H, 251H, 351H)

Bit No.	7	6	5	4	3	2	1	0
Bit Name	ISMFPE	ICSMFPE	SMFERE	ICMFPE	CMFERE	CRCEE	FERE	COFAE
Type	R/W	R/W	R/W	R/W	R/W	R/W	R/W	R/W
Default	0	0	0	0	0	0	0	0

ISMFPE:
= 0: Disable the interrupt on the $\overline{INT}$ pin when the ISMFPI bit (b4, T1/J1-053H,...) is ‘1’.
= 1: Enable the interrupt on the $\overline{INT}$ pin when the ISMFPI bit (b4, T1/J1-053H,...) is ‘1’.

ICSMFPE:
= 0: Disable the interrupt on the $\overline{INT}$ pin when the ICSMFPI bit (b3, T1/J1-053H,...) is ‘1’.
= 1: Enable the interrupt on the $\overline{INT}$ pin when the ICSMFPI bit (b3, T1/J1-053H,...) is ‘1’.

SMFERE:
= 0: Disable the interrupt on the $\overline{INT}$ pin when the SMFERI bit (b2, E1-053H,...) is ‘1’.
= 1: Enable the interrupt on the $\overline{INT}$ pin when the SMFERI bit (b2, E1-053H,...) is ‘1’.

ICMFPE:
= 0: Disable the interrupt on the $\overline{INT}$ pin when the ICMFPI bit (b2, T1/J1-053H,...) is ‘1’.
= 1: Enable the interrupt on the $\overline{INT}$ pin when the ICMFPI bit (b2, T1/J1-053H,...) is ‘1’.

CMFERE:
= 0: Disable the interrupt on the $\overline{INT}$ pin when the CMFERI bit (b2, E1-053H,...) is ‘1’.
= 1: Enable the interrupt on the $\overline{INT}$ pin when the CMFERI bit (b2, E1-053H,...) is ‘1’.

CRCEE:
= 0: Disable the interrupt on the $\overline{INT}$ pin when the CRCEI bit (b2, T1/J1-053H,...) is ‘1’.
= 1: Enable the interrupt on the $\overline{INT}$ pin when the CRCEI bit (b2, T1/J1-053H,...) is ‘1’.

FERE:
= 0: Disable the interrupt on the $\overline{INT}$ pin when the FERI bit (b1, E1-053H,...) is ‘1’.
= 1: Enable the interrupt on the $\overline{INT}$ pin when the FERI bit (b1, E1-053H,...) is ‘1’.

COFAE:
= 0: Disable the interrupt on the $\overline{INT}$ pin when the COFAI bit (b0, E1-053H,...) is ‘1’.
= 1: Enable the interrupt on the $\overline{INT}$ pin when the COFAI bit (b0, E1-053H,...) is ‘1’.

E1 FRMR Interrupt Indication 0 (052H, 152H, 252H, 352H)

Bit No.	7	6	5	4	3	2	1	0
Bit Name	Reserved		EXCRCERI	C2NCIWI	OOSMFI	OOCMFI	OOOFI	OOFI
Type			R	R	R	R	R	R
Default			0	0	0	0	0	0

EXCRCERI:

When CRC Multi-Frame is synchronized, once the accumulated CRC-4 errors are not less than 915 (≥915) in a 1 second fixed window, an excessive CRC-4 error event is generated. During out of CRC Multi-Frame synchronization state, the Excessive CRC-4 Error detection is suspended.

= 0: No Excessive CRC-4 Error event is detected.

= 1: The Excessive CRC-4 Error event is detected.

This bit will be cleared if a ’1’ is written to it.

C2NCIWI:

= 0: There is no status change on the C2NCIWV bit (b4, E1-04FH,...).

= 1: There is a transition (from ‘0’ to ‘1’ or from ‘1’ to ‘0’) on the C2NCIWV bit (b4, E1-04FH,...).

This bit will be cleared if a ’1’ is written to it.

OOSMFI:

= 0: There is no status change on the OOSMFV bit (b3, E1-04FH,...).

= 1: There is a transition (from ‘0’ to ‘1’ or from ‘1’ to ‘0’) on the OOSMFV bit (b3, E1-04FH,...).

This bit will be cleared if a ’1’ is written to it.

OOCMFI:

= 0: There is no status change on the OOCMFV bit (b2, E1-04FH,...).

= 1: There is a transition (from ‘0’ to ‘1’ or from ‘1’ to ‘0’) on the OOCMFV bit (b2, E1-04FH,...).

This bit will be cleared if a ’1’ is written to it.

OOOFI:

= 0: There is no status change on the OOOFV bit (b1, E1-04FH,...).

= 1: There is a transition (from ‘0’ to ‘1’ or from ‘1’ to ‘0’) on the OOOFV bit (b1, E1-04FH,...).

This bit will be cleared if a ’1’ is written to it.

OOFI:

= 0: There is no status change on the OOFV bit (b0, E1-04FH,...).

= 1: There is a transition (from ‘0’ to ‘1’ or from ‘1’ to ‘0’) on the OOFV bit (b0, E1-04FH,...).

This bit will be cleared if a ’1’ is written to it.

E1 FRMR Interrupt Indication 1 (053H, 153H, 253H, 353H)

Bit No.	7	6	5	4	3	2	1	0
Bit Name	ISMFPI	ICSMFPI	SMFERI	ICMFPI	CMFERI	CRCEI	FERI	COFAI
Type	R	R	R	R	R	R	R	R
Default	0	0	0	0	0	0	0	0

ISMFPI:

= 0: The received bit is not the first bit of each CAS Signaling Multi-Frame.

= 1: The first bit of each CAS Signaling Multi-Frame is received.

This bit will be cleared if a '1' is written to it. It can not be updated during out of CAS Signaling Multi-Frame synchronization state

ICSMFPI:

= 0: The received bit is not the first bit of each CRC Sub Multi-Frame.

= 1: The first bit of each CRC Sub Multi-Frame is received.

This bit will be cleared if a '1' is written to it. It can not be updated during out of CRC Multi-Frame synchronization state.

SMFERI:

When Signaling Multi-Frame is synchronized, the received Signaling Multi-Frame alignment signals are compared with the expected one ('0000'). When one or more bits do not match, a single CAS Signaling Multi-Frame alignment pattern error event is generated. During out of CAS Signaling Multi-Frame synchronization state, the CAS Signaling Multi-Frame Alignment Pattern Error detection is suspended.

= 0: No CAS Signaling Multi-Frame Alignment Pattern Error event is detected.

= 1: The CAS Signaling Multi-Frame Alignment Pattern Error event is detected.

This bit will be cleared if a '1' is written to it.

ICMFPI:

= 0: The received bit is not the first bit of each CRC Multi-Frame.

= 1: The first bit of each CRC Multi-Frame is received.

This bit will be cleared if a '1' is written to it. It can not be updated during out of CRC Multi-Frame synchronization state.

CMFERI:

When CRC Multi-Frame is synchronized, the received CRC Multi-Frame alignment signals are compared with the expected one ('001011'). If one or more bits do not match, a single CRC Multi-Frame alignment pattern error event is generated. During out of CRC Multi-Frame synchronization state, the CRC Multi-Frame Alignment Pattern Error detection is suspended.

= 0: No CRC Multi-Frame Alignment Pattern Error event is detected.

= 1: The CRC Multi-Frame Alignment Pattern Error event is detected.

This bit will be cleared if a '1' is written to it.

CRCEI:

When CRC Multi-Frame is synchronized and the local calculated CRC-4 of the current received CRC Sub Multi-Frame does not match the received CRC-4 of the next received CRC Sub Multi-Frame, a single CRC-4 error event is generated. During out of CRC Multi-Frame synchronization state, the CRC-4 Error detection is suspended.

= 0: No CRC-4 Error event is detected.

= 1: The CRC-4 Error event is detected.

This bit will be cleared if a '1' is written to it.

FERI:

When Basic frame is synchronized and the criteria set by the WORDERR bit (b3, E1-04EH,...) and the CNTNFAS bit (b4, E1-04EH,...) are met, a FAS/NFAS Bit/Pattern Error event is generated. During out of Basic frame synchronization state, the FAS/NFAS Bit/Pattern Error detection is suspended.

= 0: No FAS/NFAS Bit/Pattern Error event is detected.

= 1: The FAS/NFAS Bit/Pattern Error event is detected.

This bit will be cleared if a '1' is written to it.

COFAI:

= 0: The Basic frame alignment pattern position is not changed.

= 1: The new-found Basic frame alignment pattern position differs from the previous one.

This bit will be cleared if a '1' is written to it.

E1 TS0 International / National (054H, 154H, 254H, 354H)

Bit No.	7	6	5	4	3	2	1	0
Bit Name	Si0	Si1	A	Sa4	Sa5	Sa6	Sa7	Sa8
Type	R	R	R	R	R	R	R	R
Default	0	0	0	0	0	0	0	0

Si0:

This bit reflects the content in the International bit of the latest received NFAS frame. It is updated on the boundary of the associated NFAS frame and is held during out of Basic frame state.

Si1:

This bit reflects the content in the International bit of the latest received FAS frame. It is updated on the boundary of the associated FAS frame and is held during out of Basic frame state.

A:

This bit reflects the content in the Remote Alarm Indication bit of the latest received NFAS frame. It is updated on the boundary of the associated NFAS frame and is held during out of Basic frame state.

Sa[4:8]:

These bits reflect the content in the National bit of the latest received NFAS frame. They are updated on the boundary of the associated NFAS frame and are held during out of Basic frame state.

E1 TS16 Spare (055H, 155H, 255H, 355H)

Bit No.	7	6	5	4	3	2	1	0
Bit Name	Reserved				X0	Y	X1	X2
Type					R	R	R	R
Default					0	0	0	0

X[0:2]:

These bits reflect the content in the Extra bits. They are updated at the first bit of the next CAS Signaling Multi-Frame and are held during out of CAS Signaling Multi-Frame state.

Y:

This bit reflects the content in the Remote Signaling Multi-Frame Alarm Indication bit. It is updated at the first bit of the next CAS Signaling Multi-Frame and is held during out of CAS Signaling Multi-Frame state.

E1 Sa4 Codeword (056H, 156H, 256H, 356H)

Bit No.	7	6	5	4	3	2	1	0
Bit Name	Reserved				Sa41	Sa42	Sa43	Sa44
Type					R	R	R	R
Default					0	0	0	0

Sa4[1:4]:

These bits reflect the content in the Sa4 National Bit codeword.

If de-bounce is enabled by the SaDEB bit (b6, E1-05CH,...), they are updated when the received Sa4 National Bit codeword is the same for 2 consecutive CRC Sub Multi-Frames. If de-bounce is disabled, they are updated every CRC Sub Multi-Frame. These bits are held during out of CRC Multi-Frame synchronization state.

E1 Sa5 Codewo3rd (057H, 157H, 257H, 357H)

Bit No.	7	6	5	4	3	2	1	0
Bit Name	Reserved				Sa51	Sa52	Sa53	Sa54
Type					R	R	R	R
Default					0	0	0	0

Sa5[1:4]:

These bits reflect the content in the Sa5 National Bit codeword.

If de-bounce is enabled by the SaDEB bit (b6, E1-05CH,...), they are updated when the received Sa5 National Bit codeword is the same for 2 consecutive CRC Sub Multi-Frames. If de-bounce is disabled, they are updated every CRC Sub Multi-Frame. These bits are held during out of CRC Multi-Frame synchronization state.

E1 Sa6 Codeword (058H, 158H, 258H, 358H)

Bit No.	7	6	5	4	3	2	1	0
Bit Name	Reserved				Sa61	Sa62	Sa63	Sa64
Type					R	R	R	R
Default					0	0	0	0

Sa6[1:4]:

These bits reflect the content in the Sa6 National Bit codeword.

If de-bounce is enabled by the SaDEB bit (b6, E1-05CH,...), they are updated when the received Sa6 National Bit codeword is the same for 2 consecutive CRC Sub Multi-Frames. If de-bounce is disabled, they are updated every CRC Sub Multi-Frame. These bits are held during out of CRC Multi-Frame synchronization state.

E1 Sa7 Codeword (059H, 159H, 259H, 359H)

Bit No.	7	6	5	4	3	2	1	0
Bit Name	Reserved				Sa71	Sa72	Sa73	Sa74
Type					R	R	R	R
Default					0	0	0	0

Sa7[1:4]:

These bits reflect the content in the Sa7 National Bit codeword.

If de-bounce is enabled by the SaDEB bit (b6, E1-05CH,...), they are updated when the received Sa7 National Bit codeword is the same for 2 consecutive CRC Sub Multi-Frames. If de-bounce is disabled, they are updated every CRC Sub Multi-Frame. These bits are held during out of CRC Multi-Frame synchronization state.

E1 Sa8 Codeword (05AH, 15AH, 25AH, 35AH)

Bit No.	7	6	5	4	3	2	1	0
Bit Name	Reserved				Sa81	Sa82	Sa83	Sa84
Type					R	R	R	R
Default					0	0	0	0

Sa8[1:4]:

These bits reflect the content in the Sa8 National Bit codeword.

If de-bounce is enabled by the SaDEB bit (b6, E1-05CH,...), they are updated when the received Sa8 National Bit codeword is the same for 2 consecutive CRC Sub Multi-Frames. If de-bounce is disabled, they are updated every CRC Sub Multi-Frame. These bits are held during out of CRC Multi-Frame synchronization state.

E1 Sa6 Codeword Indication (05BH, 15BH, 25BH, 35BH)

Bit No.	7	6	5	4	3	2	1	0
Bit Name	Reserved			Sa6-FI	Sa6-EI	Sa6-CI	Sa6-AI	Sa6-8I
Type				R/W	R/W	R/W	R/W	R/W
Default				0	0	0	0	0

Sa6-FI:
= 0: Any 12 consecutive Sa6 bits or any 3 consecutive 4-bit Sa6 codewords in the CRC Sub Multi-Frame are not matched with 0xFFF.
= 1: Any 12 consecutive Sa6 bits or any 3 consecutive 4-bit Sa6 codewords in the CRC Sub Multi-Frame are matched with 0xFFF.

Sa6-EI:
= 0: Any 12 consecutive Sa6 bits or any 3 consecutive 4-bit Sa6 codewords in the CRC Sub Multi-Frame are not matched with 0xEEE.
= 1: Any 12 consecutive Sa6 bits or any 3 consecutive 4-bit Sa6 codewords in the CRC Sub Multi-Frame are matched with 0xEEE.

Sa6-CI:
= 0: Any 12 consecutive Sa6 bits or any 3 consecutive 4-bit Sa6 codewords in the CRC Sub Multi-Frame are not matched with 0xCCC.
= 1: Any 12 consecutive Sa6 bits or any 3 consecutive 4-bit Sa6 codewords in the CRC Sub Multi-Frame are matched with 0xCCC.

Sa6-AI:
= 0: Any 12 consecutive Sa6 bits or any 3 consecutive 4-bit Sa6 codewords in the CRC Sub Multi-Frame are not matched with 0xAAA.
= 1: Any 12 consecutive Sa6 bits or any 3 consecutive 4-bit Sa6 codewords in the CRC Sub Multi-Frame are matched with 0xAAA.

Sa6-8I:
= 0: Any 12 consecutive Sa6 bits or any 3 consecutive 4-bit Sa6 codewords in the CRC Sub Multi-Frame are not matched with 0x888.
= 1: Any 12 consecutive Sa6 bits or any 3 consecutive 4-bit Sa6 codewords in the CRC Sub Multi-Frame are matched with 0x888.

E1 Sa Codeword Interrupt Control (05CH, 15CH, 25CH, 35CH)

Bit No.	7	6	5	4	3	2	1	0
Bit Name	Sa6SYN	SaDEB	Sa6SCE	Sa4E	Sa5E	Sa6E	Sa7E	Sa8E
Type	R/W	R/W	R/W	R/W	R/W	R/W	R/W	R/W
Default	0	0	0	0	0	0	0	0

Sa6SYN:

= 0: Any 12 consecutive Sa6 bits are compared with 0x888, 0xAAA, 0xCCC, 0xEEE and 0xFFF when CRC Multi-Frame is synchronized.

= 1: Any 3 consecutive 4-bit Sa6 codewords in the CRC Sub Multi-Frame are compared with 0x888, 0xAAA, 0xCCC, 0xEEE and 0xFFF when CRC Multi-Frame is synchronized.

SaDEB:

= 0: Disable the de-bounce function of the National Bit codeword extraction.

= 1: Enable the de-dounce function of the National Bit codeword extraction.

Sa6SCE:

= 0: Disable the interrupt on the $\overline{INT}$ pin when the SCAI bit (b3, T1/J1-05DH,...) is ‘1’.

= 1: Enable the interrupt on the $\overline{INT}$ pin when the SCAI bit (b3, T1/J1-05DH,...) is ‘1’.

Sa4E:

= 0: Disable the interrupt on the $\overline{INT}$ pin when the Sa4I bit (b2, E1-05DH,...) is ‘1’.

= 1: Enable the interrupt on the $\overline{INT}$ pin when the Sa4I bit (b2, E1-05DH,...) is ‘1’.

Sa5E:

= 0: Disable the interrupt on the $\overline{INT}$ pin when the Sa5I bit (b2, E1-05DH,...) is ‘1’.

= 1: Enable the interrupt on the $\overline{INT}$ pin when the Sa5I bit (b2, E1-05DH,...) is ‘1’.

Sa6E:

= 0: Disable the interrupt on the $\overline{INT}$ pin when the Sa6I bit (b2, E1-05DH,...) is ‘1’.

= 1: Enable the interrupt on the $\overline{INT}$ pin when the Sa6I bit (b2, E1-05DH,...) is ‘1’.

Sa7E:

= 0: Disable the interrupt on the $\overline{INT}$ pin when the Sa7I bit (b2, E1-05DH,...) is ‘1’.

= 1: Enable the interrupt on the $\overline{INT}$ pin when the Sa7I bit (b2, E1-05DH,...) is ‘1’.

Sa8E:

= 0: Disable the interrupt on the $\overline{INT}$ pin when the Sa8I bit (b2, E1-05DH,...) is ‘1’.

= 1: Enable the interrupt on the $\overline{INT}$ pin when the Sa8I bit (b2, E1-05DH,...) is ‘1’.

E1 Sa Codeword Interrupt Indication (05DH, 15DH, 25DH, 35DH)

Bit No.	7	6	5	4	3	2	1	0
Bit Name	Reserved		Sa6SCI	Sa4I	Sa5I	Sa6I	Sa7I	Sa8I
Type			R/W	R/W	R/W	R/W	R/W	R/W
Default			0	0	0	0	0	0

Sa6SCI:

= 0: Any 12 consecutive Sa6 bits or any 3 consecutive 4-bit Sa6 codewords in the CRC Sub Multi-Frame are not matched with 0x888, 0xAAA, 0xCCC, 0xEEE or 0xFFF.

= 1: Any 12 consecutive Sa6 bits or any 3 consecutive 4-bit Sa6 codewords in the CRC Sub Multi-Frame are matched with 0x888, 0xAAA, 0xCCC, 0xEEE or 0xFFF.

Sa4I:

= 0: The value in the Sa4[1:4] bits is not changed.
= 1: The value in the Sa4[1:4] bits is changed.

Sa5I:

= 0: The value in the Sa5[1:4] bits is not changed.
= 1: The value in the Sa5[1:4] bits is changed.

Sa6I:

= 0: The value in the Sa6[1:4] bits is not changed.
= 1: The value in the Sa6[1:4] bits is changed.

Sa7I:

= 0: The value in the Sa7[1:4] bits is not changed.
= 1: The value in the Sa7[1:4] bits is changed.

Sa8I:

= 0: The value in the Sa8[1:4] bits is not changed.
= 1: The value in the Sa8[1:4] bits is changed.

E1 Overhead Error Status (05FH, 15FH, 25FH, 35FH)

Bit No.	7	6	5	4	3	2	1	0
Bit Name	Reserved					RAICRCV	CFEBEV	V52LINKV
Type						R	R	R
Default						0	0	0

RAICRCV:

The Continuous RAI & FEBE Error event is detected on the base of CRC Multi-Frame synchronization.

= 0: No Continuous RAI & FEBE Error event is detected.

= 1: The Continuous RAI & FEBE Error event is detected, i.e., a logic 1 is received in the A bit and a logic 0 is received in any of the E1 and E2 bits for 10ms.

CFEBEV:

The Continuous FEBE Error event is detected on the base of CRC Multi-Frame synchronization.

= 0: No Continuous FEBE Error event is detected.

= 1: The Continuous FEBE Error event is detected, i.e., a logic 0 is received in any of the E1 or E2 bit on $\geq$ 990 occasions per second for the latest 5 consecutive seconds.

V52LINKV:

The V5.2 link ID signal can be received on the base of Basic Frame synchronization.

= 0: The V5.2 link ID signal is not received.

= 1: The V5.2 link ID signal is received, i.e., 2 out of 3 sliding Sa7 bits are logic 0s.

E1 Overhead Interrupt Control (060H, 160H, 260H, 360H)

Bit No.	7	6	5	4	3	2	1	0
Bit Name	Reserved		TCRCEE	TFEBEE	FEBEE	RAICRCE	CFEBEE	V52LINKE
Type			R/W	R/W	R/W	R/W	R/W	R/W
Default			0	0	0	0	0	0

TCRCEE:

= 0: Disable the interrupt on the $\overline{INT}$ pin when the TCRCEI bit (b3, E1-05DH,...) is ‘1’.
= 1: Enable the interrupt on the $\overline{INT}$ pin when the TCRCEI bit (b3, E1-05DH,...) is ‘1’.

TFEBEE:

= 0: Disable the interrupt on the $\overline{INT}$ pin when the TFEBEI bit (b3, E1-05DH,...) is ‘1’.
= 1: Enable the interrupt on the $\overline{INT}$ pin when the TFEBEI bit (b3, E1-05DH,...) is ‘1’.

FEBEE:

= 0: Disable the interrupt on the $\overline{INT}$ pin when the FEBEI bit (b3, E1-05DH,...) is ‘1’.
= 1: Enable the interrupt on the $\overline{INT}$ pin when the FEBEI bit (b3, E1-05DH,...) is ‘1’.

RAICRCE:

= 0: Disable the interrupt on the $\overline{INT}$ pin when the RAICRCI bit (b3, E1-05DH,...) is ‘1’.
= 1: Enable the interrupt on the $\overline{INT}$ pin when the RAICRCI bit (b3, E1-05DH,...) is ‘1’.

CFEBEE:

= 0: Disable the interrupt on the $\overline{INT}$ pin when the CFEBEI bit (b3, E1-05DH,...) is ‘1’.
= 1: Enable the interrupt on the $\overline{INT}$ pin when the CFEBEI bit (b3, E1-05DH,...) is ‘1’.

V52LINKE:

= 0: Disable the interrupt on the $\overline{INT}$ pin when the V52LINKI bit (b0, E1-05DH,...) is ‘1’.
= 1: Enable the interrupt on the $\overline{INT}$ pin when the V52LINKI bit (b0, E1-05DH,...) is ‘1’.

E1 Overhead Interrupt Indication (061H, 161H, 261H, 361H)

Bit No.	7	6	5	4	3	2	1	0
Bit Name	Reserved		TCRCEI	TFEBEI	FEBEI	RAICRCI	CFEBEI	V52LINKI
Type			R	R	R	R	R	R
Default			0	0	0	0	0	0

TCRCEI:

If the 4-bit Sa6 codeword of a CRC Sub Multi-Frame is matched with ‘0010’ or ‘0011’, the Network Terminal CRC Error event is generated.

= 0: No NT CRC Error event is detected.

= 1: The NT CRC Error event is detected.

This bit will be cleared if a ’1’ is written to it.

TFEBEI:

If the 4-bit Sa6 codeword of a CRC Sub Multi-Frame is matched with ‘0001’ or ‘0011’, the Network Terminal Far End Block Error event is generated.

= 0: No NT FEBE Error event is detected.

= 1: The NT FEBE Error event is detected.

This bit will be cleared if a ’1’ is written to it.

FEBEI:

When CRC Multi-Frame is synchronized and any of the CRC error indication (E1 or E2) bits is received as a logic 0, a far end block error event is generated. During out of CRC Multi-Frame synchronization state, the Far End Block Error (FEBE) detection is suspended.

= 0: No Far End Block Error (FEBE) event is detected.

= 1: The Far End Block Error (FEBE) event is detected.

This bit will be cleared if a ’1’ is written to it.

RAICRCI:

= 0: There is no status change on the RAICRCV bit (b, E1-04FH,...).

= 1: There is a transition (from ‘0’ to ‘1’ or from ‘1’ to ‘0’) on the RAICRCV bit (b2, E1-04FH,...).

This bit will be cleared if a ’1’ is written to it.

CFEBEI:

= 0: There is no status change on the CFEBEV bit (b, E1-04FH,...).

= 1: There is a transition (from ‘0’ to ‘1’ or from ‘1’ to ‘0’) on the CFEBEV bit (b, E1-04FH,...).

This bit will be cleared if a ’1’ is written to it.

V52LINKI:

= 0: There is no status change on the V52LINKV bit (b, E1-04FH,...).

= 1: There is a transition (from ‘0’ to ‘1’ or from ‘1’ to ‘0’) on the V52LINKV bit (b, E1-04FH,...).

This bit will be cleared if a ’1’ is written to it.

E1 Mode (062H, 162H, 262H, 362H)

Bit No.	7	6	5	4	3	2	1	0
Bit Name	Reserved	XDIS	SiDIS	FEBEDIS	CRCM	SIGEN	GENCRC	FDIS
Type		R/W	R/W	R/W	R/W	R/W	R/W	R/W
Default		0	0	0	0	1	1	0

XDIS:

This bit is valid when the Signaling Multi-frame is generated.

= 0: The Extra bits (the Bit 5, 7 & 8 of TS16 of Frame 0 of the Signaling Multi-Frame) are replaced by the value set in the X[0:2] bits (b3 & b1~0, E1-06AH,...).

= 1: Disable the Extra bits to be replaced by the value set in the X[0:2] bits (b3 & b1~0, E1-06AH,...).

SiDIS:

When the Basic frame is generated, this bit determines how to replace the International bit.

= 0: The International bit (Bit 1) of FAS frame and NFAS frame are replaced by the value set in the Si[1] (b0, E1-063H,...) and Si[0] bits (b1, E1-063H,...) respectively.

= 1: Disable the International bit (Bit 1) of FAS frame and NFAS frame to be replaced by the value set in the Si[1] (b0, E1-063H,...) and Si[0] bits (b1, E1-063H,...) respectively.

When the CRC Multi-frame is generated, this bit, together with the FEBEDIS bit (b4, E1-062H,...) and the OOCMFV bit (b2, E1-04FH,...), determines how to replace the E bit (refer to the description of the FEBEDIS bit).

.

FEBEDIS:

When the CRC Multi-frame is generated, this bit, together with the SiDIS bit (b5, E1-062H,...) and the OOCMFV bit (b2, E1-04FH,...), determines how to replace the E bit.

FEBEDIS (b4, E1-062H,...)	**OOCMFV** (b2, E1-04FH,...)	**SiDIS** (b5, E1-062H,...)	**E Bits Insertion**
0	0	X	A single zero is inserted into the E bit when a CRC-4 Error event is detected in the receive path. (the E1 bit corresponds to SMFI and the E2 bit corresponds to SMFII)
0	1	X	The value in the Si[1] bit (b0, E1-063H,...) is inserted into the E1 bit position. The value in the Si[0] bit (b1, E1-063H,...) is inserted into the E2 bit position.
1	X	0	The value in the Si[1] bit (b0, E1-063H,...) is inserted into the E1 bit position. The value in the Si[0] bit (b1, E1-063H,...) is inserted into the E2 bit position.
1	X	1	The E bit positions are unchanged.

CRCM, SIGEN, GENCRC:

These bits are valid when the FDIS bit (b0, E1-062H,...) is 0. They control what kind of frame is generated:

Desired Frame Type	**GENCRC** (b1, E1-062H,...)	**CRCM** (b3, E1-062H,...)	**SIGEN** (b2, E1-062H,...)
Basic Frame	0	X	X
	1	0	X
CRC Multi-Frame	1	0	X
Modified CRC Multi-Frame	1	1	X
Channel Associated Signaling (CAS) Multi-Frame	0	X	1
	1	0	1

FDIS:

= 0: Enable the generation of the Basic frame, CRC Multi-Frame and Channel Associated Signaling (CAS) Multi-Frame.

= 1: Disable the generation of the Basic frame, CRC Multi-Frame and Channel Associated Signaling (CAS) Multi-Frame.

E1 FGEN International Bit (063H, 163H, 263H, 363H)

Bit No.	**7**	**6**	**5**	**4**	**3**	**2**	**1**	**0**
Bit Name	Reserved						Si0	Si1
Type							R/W	R/W
Default							1	1

Si0:

When the Basic frame is generated and the SiDIS bit (b5, E1-062H,...) is ‘0’, it contains the value to replace the International bit (Bit 1) of the NFAS frame.

When the CRC Multi-frame is generated, controlled by the FEBEDIS bit (b4, E1-062H,...), the OOCMFV bit (b2, E1-04FH,...) bit and the SiDIS bit (b5, E1-062H,...), it contains the value to replace the E2 bit.

Si1:

When the Basic frame is generated and the SiDIS bit (b5, E1-062H,...) is ‘0’, it contains the value to replace the International bit (Bit 1) of the FAS frame.

When the CRC Multi-frame is generated, controlled by the FEBEDIS bit (b4, E1-062H,...), the OOCMFV bit (b2, E1-04FH,...) bit and the SiDIS bit (b5, E1-062H,...), it contains the value to replace the E1 bit.

E1 FGEN Sa Control (064H, 164H, 264H, 364H)

Bit No.	7	6	5	4	3	2	1	0
Bit Name	Reserved			Sa4EN	Sa5EN	Sa6EN	Sa7EN	Sa8EN
Type				R/W	R/W	R/W	R/W	R/W
Default				0	0	0	0	0

Sa4EN:

This bit is valid when the Basic frame is generated.
= 0: Disable the Sa4[1:4] bits to be replaced by the value set in the Sa4[1:4] bits (b3~0, E1-065H,...).
= 1: The Sa4[1:4] bits are replaced by the value set in the Sa4[1:4] bits (b3~0, E1-065H,...).

Sa5EN:

This bit is valid when the Basic frame is generated.
= 0: Disable the Sa5[1:4] bits to be replaced by the value set in the Sa5[1:4] bits (b3~0, E1-066H,...).
= 1: The Sa5[1:4] bits are replaced by the value set in the Sa5[1:4] bits (b3~0, E1-066H,...).

Sa6EN:

This bit is valid when the Basic frame is generated.
= 0: Disable the Sa6[1:4] bits to be replaced by the value set in the Sa6[1:4] bits (b3~0, E1-067H,...).
= 1: The Sa6[1:4] bits are replaced by the value set in the Sa6[1:4] bits (b3~0, E1-067H,...).

Sa7EN:

This bit is valid when the Basic frame is generated.
= 0: Disable the Sa7[1:4] bits to be replaced by the value set in the Sa7[1:4] bits (b3~0, E1-068H,...).
= 1: The Sa7[1:4] bits are replaced by the value set in the Sa7[1:4] bits (b3~0, E1-068H,...).

Sa8EN:

This bit is valid when the Basic frame is generated.
= 0: Disable the Sa8[1:4] bits to be replaced by the value set in the Sa8[1:4] bits (b3~0, E1-069H,...).
= 1: The Sa8[1:4] bits are replaced by the value set in the Sa8[1:4] bits (b3~0, E1-069H,...).

E1 Sa4 Code-word (065H, 165H, 265H, 365H)

Bit No.	7	6	5	4	3	2	1	0
Bit Name	Reserved				Sa41	Sa42	Sa43	Sa44
Type					R/W	R/W	R/W	R/W
Default					1	1	1	1

Sa4[1:4]:

These bits are valid when the Basic frame is generated and the Sa4EN bit (b4, E1-064H,...) is ‘1’. When only the Basic frame is generated, the value in the Sa4[1] bit replaces the Sa4 bit. When the CRC Multi-frame is generated, they contain the value to replace the Sa4[1:4] bits.

E1 Sa5 Code-word (066H, 166H, 266H, 366H)

Bit No.	7	6	5	4	3	2	1	0
Bit Name	Reserved				Sa51	Sa52	Sa53	Sa54
Type					R/W	R/W	R/W	R/W
Default					1	1	1	1

Sa5[1:4]:

These bits are valid when the Basic frame is generated and the Sa5EN bit (b3, E1-064H,...) is ‘1’. When only the Basic frame is generated, the value in the Sa5[1] bit replaces the Sa5 bit. When the CRC Multi-frame is generated, they contain the value to replace the Sa5[1:4] bits.

E1 Sa6 Code-word (067H, 167H, 267H, 367H)

Bit No.	7	6	5	4	3	2	1	0
Bit Name	Reserved				Sa61	Sa62	Sa63	Sa64
Type					R/W	R/W	R/W	R/W
Default					1	1	1	1

Sa6[1:4]:

These bits are valid when the Basic frame is generated and the Sa6EN bit (b2, E1-064H,...) is ‘1’. When only the Basic frame is generated, the value in the Sa6[1] bit replaces the Sa6 bit. When the CRC Multi-frame is generated, they contain the value to replace the Sa6[1:4] bits.

E1 Sa7 Code-word (068H, 168H, 268H, 368H)

Bit No.	7	6	5	4	3	2	1	0
Bit Name	Reserved				Sa71	Sa72	Sa73	Sa74
Type					R/W	R/W	R/W	R/W
Default					1	1	1	1

Sa7[1:4]:

These bits are valid when the Basic frame is generated and the Sa7EN bit (b1, E1-064H,...) is ‘1’. When only the Basic frame is generated, the value in the Sa7[1] bit replaces the Sa7 bit. When the CRC Multi-frame is generated, they contain the value to replace the Sa7[1:4] bits.

E1 Sa8 Code-word (069H, 169H, 269H, 369H)

Bit No.	7	6	5	4	3	2	1	0
Bit Name	Reserved				Sa81	Sa82	Sa83	Sa84
Type					R/W	R/W	R/W	R/W
Default					1	1	1	1

Sa8[1:4]:

These bits are valid when the Basic frame is generated and the Sa8EN bit (b0, E1-064H,...) is ‘1’. When only the Basic frame is generated, the value in the Sa8[1] bit replaces the Sa8 bit. When the CRC Multi-frame is generated, they contain the value to replace the Sa8[1:4] bits.

E1 FGEN Extra (06AH, 16AH, 26AH, 36AH)

Bit No.	7	6	5	4	3	2	1	0
Bit Name	Reserved				X0	Reserved	X1	X2
Type					R/W		R/W	R/W
Default					1		1	1

X[0:2]:

These bits are valid when the Signaling Multi-frame is generated and the XDIS bit (b6, E1-062H,...) is ‘0’. They contain the value to replace the Extra bits (the Bit 5, 7 & 8 of TS16 of Frame 0 of the Signaling Multi-Frame).

E1 FGEN Maintenance 0 (06BH, 16BH, 26BH, 36BH)

Bit No.	7	6	5	4	3	2	1	0
Bit Name	Reserved		TS16LOS	TS16AIS	MFAIS	G706RAI	AUTOYELLOW	REMAIS
Type			R/W	R/W	R/W	R/W	R/W	R/W
Default			0	0	0	0	0	0

TS16LOS:

= 0: Normal operation.

= 1: The data stream to be transmitted on TS16 is overwritten with all zeros.

TS16AIS:

= 0: Normal operation.

= 1: The data stream to be transmitted on TS16 is overwritten with all ‘One’s.

MFAIS:

This bit is valid when the Signaling Multi-Frame is generated. The value in this bit will be continuously transmitted in the Y bit position (the Bit 6 of TS16 of Frame 0 of the Signaling Multi-Frame).

G706RAI:

This bit is valid when the Basic frame is generated. It selects the criteria for automatic RAI transmission.

= 0: The RAI is transmitted automatically when: 1). out of Basic frame sync is declared in the receive path; 2). the receive path is operated in CRC-4 to non-CRC-4 inter-working mode; 3). the offline searching in the receive path is out of Basic Frame sync; 4). the REMAIS bit (b0, E1-06BH,...) is 1.

= 1: The RAI is transmitted automatically when: 1). out of Basic frame sync is declared in the receive path; 2). the REMAIS bit (b0, E1-06BH,...) is 1.

AUTOYELLOW:

This bit is valid when the Basic frame is generated.

= 0: Disable the automatic RAI transmission.

= 1: The Remote Alarm Indication (RAI) is automatically transmitted as logic 1 in the A bit position when conditions meet the criteria selected by the G706RAI bit (b2, E1-06BH,...).

REMAIS:

This bit is valid when the Basic frame is generated.

= 0: Disable the manual RAI transmission.

= 1: The Remote Alarm Indication (RAI) is manually transmitted as logic 1 in the A bit position.

E1 FGEN Maintenance 1 (06CH, 16CH, 26CH, 36CH)

Bit No.	7	6	5	4	3	2	1	0
Bit Name	Reserved					COFAEN	TXDIS	TAIS
Type						R/W	R/W	R/W
Default						0	0	0

COFAEN:

Any transition (from ‘0’ to ‘1’ or from ‘1’ to ‘0’) on this bit will lead to one bit deletion or one bit repetition in the data stream to be transmitted, that is, to change the frame alignment position. The one bit deletion or repetition occurs randomly.

TXDIS:

= 0: Normal operation.

= 1: The data stream to be transmitted is overwritten with all ‘Zero’s.

TAIS:

= 0: Normal operation.

= 1: The data stream to be transmitted is overwritten with all ‘One’s.

E1 FGEN Interrupt Control (06DH, 16DH, 26DH, 36DH)

Bit No.	7	6	5	4	3	2	1	0
Bit Name	Reserved			SMFE	FASE	SIGMFE	MFE	BFE
Type				R/W	R/W	R/W	R/W	R/W
Default				0	0	0	0	0

SMFE:
= 0: Disable the interrupt on the $\overline{INT}$ pin when the SMFI bit (b4, E1-06EH,...) is '1'.
= 1: Enable the interrupt on the $\overline{INT}$ pin when the SMFI bit (b4, E1-06EH,...) is '1'.

FASE:
= 0: Disable the interrupt on the $\overline{INT}$ pin when the FASI bit (b3, E1-06EH,...) is '1'.
= 1: Enable the interrupt on the $\overline{INT}$ pin when the FASI bit (b3, E1-06EH,...) is '1'.

SIGMFE:
= 0: Disable the interrupt on the $\overline{INT}$ pin when the SIGMFI bit (b2, E1-06EH,...) is '1'.
= 1: Enable the interrupt on the $\overline{INT}$ pin when the SIGMFI bit (b2, E1-06EH,...) is '1'.

MFE:
= 0: Disable the interrupt on the $\overline{INT}$ pin when the MFI bit (b1, E1-06EH,...) is '1'.
= 1: Enable the interrupt on the $\overline{INT}$ pin when the MFI bit (b1, E1-06EH,...) is '1'.

BFE:
= 0: Disable the interrupt on the $\overline{INT}$ pin when the BFI bit (b0, E1-06EH,...) is '1'.
= 1: Enable the interrupt on the $\overline{INT}$ pin when the BFI bit (b0, E1-06EH,...) is '1'.

E1 FGEN Interrupt Indication (06EH, 16EH, 26EH, 36EH)

Bit No.	7	6	5	4	3	2	1	0
Bit Name	Reserved			SMFI	FASI	SIGMFI	MFI	BFI
Type				R	R	R	R	R
Default				0	0	0	0	0

SMFI:

= 0: The bit input to the Frame Generator is not the first bit of each CRC Sub Multi-Frame.
= 1: The first bit of each CRC Sub Multi-Frame is input to the Frame Generator.
This bit will be cleared if a ’1’ is written to it.

FASI:

= 0: The bit input to the Frame Generator is not the first bit of each FAS.
= 1: The first bit of each FAS is input to the Frame Generator.
This bit will be cleared if a ’1’ is written to it.

SIGMFI:

= 0: The bit input to the Frame Generator is not the first bit of each Signaling Multi-Frame.
= 1: The first bit of each Signaling Multi-Frame is input to the Frame Generator.
This bit will be cleared if a ’1’ is written to it.

MFI:

= 0: The bit input to the Frame Generator is not the first bit of each CRC Multi-Frame.
= 1: The first bit of each CRC Multi-Frame is input to the Frame Generator.
This bit will be cleared if a ’1’ is written to it.

BFI:

= 0: The bit input to the Frame Generator is not the first bit of each Basic frame.
= 1: The first bit of each Basic frame is input to the Frame Generator.
This bit will be cleared if a ’1’ is written to it.

E1 Error Insertion (06FH, 16FH, 26FH, 36FH)

Bit No.	7	6	5	4	3	2	1	0
Bit Name	Reserved		CRCINV	CRCPINV	CASPINV	NFASINV	FASALLINV	FAS1INV
Type			R/W	R/W	R/W	R/W	R/W	R/W
Default			0	0	0	0	0	0

CRCINV:

This bit is valid when the CRC Multi-frame or the Modified CRC Multi-frame is generated.
A transition from ‘0’ to ‘1’ on this bit will invert all 4 calculated CRC bits in one Sub-Multi-Frame.
This bit is cleared when the inversion is completed.

CRCPINV:

This bit is valid when the CRC Multi-frame is generated.
A transition from ‘0’ to ‘1’ on this bit will invert one 6-bit CRC Multi-Frame alignment pattern (‘001011’).
This bit is cleared when the inversion is completed.

CASPINV:

This bit is valid when the CAS Multi-frame is generated.
A transition from ‘0’ to ‘1’ on this bit will invert one 4-bit Signaling Multi-Frame alignment pattern (‘0000’).
This bit is cleared when the inversion is completed.

NFASINV:

This bit is valid when the Basic frame is generated.
A transition from ‘0’ to ‘1’ on this bit will invert one NFAS bit (the Bit 2 of TS0 of each odd frame).
This bit is cleared when the inversion is completed.

FASALLINV:

This bit is valid when the Basic frame is generated.
A transition from ‘0’ to ‘1’ on this bit will invert one 7-bit FAS pattern (the Bit 2 ~ Bit 8 of TS0 of each even frame).
This bit is cleared when the inversion is completed.

FAS1INV:

This bit is valid when the Basic frame is generated.
A transition from ‘0’ to ‘1’ on this bit will invert one FAS bit (the Bit 2 ~ Bit 8 of TS0 of each even frame).
This bit is cleared when the inversion is completed.

E1 Transmit Timing Option (070H, 170H, 270H, 370H)

Bit No.	7	6	5	4	3	2	1	0
Bit Name	Reserved							XTS
Type								R/W
Default								0

XTS:

In Transmit Clock Master mode:

= 0: The source of the transmit clock is selected from the clock generated by the internal clock generator (2.048 MHz).

= 1: The source of the transmit clock is selected from the recovered clock from the line side.

In Transmit Clock Master mode, the Transmit Buffer is bypassed automatically.

In Transmit Clock Slave mode and in Transmit Multiplexed mode:

= 0: The source of the transmit clock is selected from the clock from the backplane. The Transmit Buffer is bypassed.

= 1: The source of the transmit clock is selected from the clock generated by the internal clock generator (2.048 MHz). The Transmit Buffer is not bypassed.

E1 PRGD Control (071H, 171H, 271H, 371H)

Bit No.	7	6	5	4	3	2	1	0
Bit Name	Reserved				RINV	TINV	PATS1	PATS0
Type					R/W	R/W	R/W	R/W
Default					0	0	0	0

RINV:

= 0: The data is not inverted before extracted to the pattern detector.

= 1: The data is inverted before extracted to the pattern detector.

TINV:

= 0: The generated pattern is not inverted.

= 1: The generated pattern is inverted.

PATS[1:0]:

These bits select the PRBS generated and detected pattern.

= 00: The 2^{15}-1 pattern per O.152 is selected.

= 01: The 2^{20}-1 pattern per O.150-4.5 is selected.

= 10: The 2^{11}-1 pattern per O.150 is selected.

= 11: Reserved.

E1 PRGD Status/Error Control (072H, 172H, 272H, 372H)

Bit No.	7	6	5	4	3	2	1	0
Bit Name	Reserved				BERE	INV	SYNCV	SYNCE
Type					R/W	R/W	R	R/W
Default					0	0	0	0

BERE:
= 0: Disable the interrupt on the $\overline{INT}$ pin when the BERI bit (b3, E1-073H,...) is ‘1’.
= 1: Enable the interrupt on the $\overline{INT}$ pin when the BERI bit (b3, E1-073H,...) is ‘1’.

INV:
= 0: No bit error is inserted to the generated pattern.
= 1: A single bit error is inserted to the generated pattern.
This bit is cleared after the single bit error insertion is completed.

SYNCV:
= 0: The pattern is out of synchronization (the pattern detector has detected 10 or more bit errors in a fixed 48-bit window).
= 1: The pattern is in synchronization (the pattern detector has detected at least 48 consecutive error-free bit periods).

SYNCE:
= 0: Disable the interrupt on the $\overline{INT}$ pin when the SYNCI bit (b0, E1-073H,...) is ‘1’.
= 1: Enable the interrupt on the $\overline{INT}$ pin when the SYNCI bit (b0, E1-073H,...) is ‘1’.

E1 PRGD Interrupt Indication (073H, 173H, 273H, 373H)

Bit No.	7	6	5	4	3	2	1	0
Bit Name	Reserved				BERI	Reserved		SYNCI
Type					R			R
Default					0			0

BERI:
= 0: No bit is mismatched with the PRGD pattern when the extracted data is in synchronization state.
= 1: At least one bit is mismatched with the PRGD pattern when the extracted data is in synchronization state.
This bit will be cleared if a ’1’ is written to it.

SYNCI:
= 0: There is no status change on the SYNCV bit (b1, E1-072H,...).
= 1: There is a transition (from ‘0’ to ‘1’ or from ‘1’ to ‘0’) on the SYNCV bit (b1, E1-072H,...).
This bit will be cleared if a ’1’ is written to it.

E1 ELST Configuration (07CH, 17CH, 27CH, 37CH)

Bit No.	7	6	5	4	3	2	1	0
Bit Name	Reserved					TRKEN	SLIPD	SLIPE
Type						R/W	R	R/W
Default						0	0	0

TRKEN:

In Receive Clock Slave mode and Receive Multiplexed mode, if it is out of synchronization, the trunk code programmed in the TRKCODE[7:0] bits (b7~0, E1-07EH,...) can be set to replace the data or not.

= 0: Disable the replacement.

= 1: Enable the replacement.

SLIPD:

This bit makes sense only when the SLIPI bit (b0, E1-07DH,...) is ‘1’.

= 0: The latest slip is due to the Elastic Store Buffer being empty.

= 1: The latest slip is due to the Elastic Store Buffer being full.

SLIPE:

= 0: Disable the interrupt on the $\overline{INT}$ pin when the SLIPI bit (b0, E1-07DH,...) is ‘1’.

= 1: Enable the interrupt on the $\overline{INT}$ pin when the SLIPI bit (b0, E1-07DH,...) is ‘1’.

E1 ELST Interrupt Indication (07DH, 17DH, 27DH, 37DH)

Bit No.	7	6	5	4	3	2	1	0
Bit Name	Reserved							SLIPI
Type								R
Default								0

SLIPI:

= 0: No slip occurs.

= 1: A slip occurs.

This bit will be cleared if a ’1’ is written to it.

E1 ELST Trunk Code (07EH, 17EH, 27EH, 37EH)

Bit No.	7	6	5	4	3	2	1	0
Bit Name	TRKCODE7	TRKCODE6	TRKCODE5	TRKCODE4	TRKCODE3	TRKCODE2	TRKCODE1	TRKCODE0
Type	R/W	R/W	R/W	R/W	R/W	R/W	R/W	R/W
Default	1	1	1	1	1	1	1	1

TRKCODE[7:0]:

In Receive Clock Slave mode and Receive Multiplexed mode, if it is out of synchronization and the TRKEN bit (b2, E1-07CH,...) is ‘1’, these bits are the trunk codes to replace the received data stream.

E1 THDLC Enable Control (084H, 184H, 284H, 384H)

Bit No.	7	6	5	4	3	2	1	0
Bit Name	Reserved					TDLEN3	TDLEN2	TDLEN1
Type						R/W	R/W	R/W
Default						0	0	0

TDLEN3:
= 0: All the functions of the HDLC Transmitter #3 is disabled.
= 1: All the functions of the HDLC Transmitter #3 is enabled.

TDLEN2:
= 0: All the functions of the HDLC Transmitter #2 is disabled.
= 1: All the functions of the HDLC Transmitter #2 is enabled.

TDLEN1:
= 0: All the functions of the HDLC Transmitter #1 is disabled.
= 1: All the functions of the HDLC Transmitter #1 is enabled.

E1 THDLC1 Assignment (085H, 185H, 285H, 385H)

Bit No.	7	6	5	4	3	2	1	0
Bit Name	Reserved	EVEN	ODD	TS4	TS3	TS2	TS1	TS0
Type		R/W	R/W	R/W	R/W	R/W	R/W	R/W
Default		0	0	0	0	0	0	0

E1 THDLC2 Assignment (086H, 186H, 286H, 386H)

Bit No.	7	6	5	4	3	2	1	0
Bit Name	Reserved	EVEN	ODD	TS4	TS3	TS2	TS1	TS0
Type		R/W	R/W	R/W	R/W	R/W	R/W	R/W
Default		0	0	0	0	0	0	0

E1 THDLC3 Assignment (087H, 187H, 287H, 387H)

Bit No.	7	6	5	4	3	2	1	0
Bit Name	Reserved	EVEN	ODD	TS4	TS3	TS2	TS1	TS0
Type		R/W	R/W	R/W	R/W	R/W	R/W	R/W
Default		0	0	0	0	0	0	0

The function of the above three sets of registers are the same. However, they correspond to different THDLC.

EVEN:
= 0: The data is not inserted to the even frames.
= 1: The data is inserted to the even frames.

ODD:
= 0: The data is not inserted to the odd frames.
= 1: The data is inserted to the odd frames.

TS[4:0]:
These bits binary define one timeslot of even and/or odd frames to insert the data to. They are invalid when the EVEN bit and the ODD bit are both ‘0’.

E1 THDLC1 Bit Select (088H, 188H, 288H, 388H)

Bit No.	7	6	5	4	3	2	1	0
Bit Name	BITEN7	BITEN6	BITEN5	BITEN4	BITEN3	BITEN2	BITEN1	BITEN0
Type	R/W	R/W	R/W	R/W	R/W	R/W	R/W	R/W
Default	0	0	0	0	0	0	0	0

E1 THDLC2 Bit Select (089H, 189H, 289H, 389H)

Bit No.	7	6	5	4	3	2	1	0
Bit Name	BITEN7	BITEN6	BITEN5	BITEN4	BITEN3	BITEN2	BITEN1	BITEN0
Type	R/W	R/W	R/W	R/W	R/W	R/W	R/W	R/W
Default	0	0	0	0	0	0	0	0

E1 THDLC3 Bit Select (08AH, 18AH, 28AH, 38AH)

Bit No.	7	6	5	4	3	2	1	0
Bit Name	BITEN7	BITEN6	BITEN5	BITEN4	BITEN3	BITEN2	BITEN1	BITEN0
Type	R/W	R/W	R/W	R/W	R/W	R/W	R/W	R/W
Default	0	0	0	0	0	0	0	0

The function of the above three sets of registers are the same. However, they correspond to different THDLC.

BITENn:

= 0: The data is not inserted to the corresponding bit.
= 1: The data is inserted to the corresponding bit of the assigned timeslot.
These bits are invalid when the EVEN bit and the ODD bit are both logic 0.
The BITEN[7] bit corresponds to the first bit (MSB) of the selected timeslot.

E1 RHDLC Enable Control (08BH, 18BH, 28BH, 38BH)

Bit No.	7	6	5	4	3	2	1	0
Bit Name	Reserved					RDLEN3	RDLEN2	RDLEN1
Type						R/W	R/W	R/W
Default						0	0	0

RDLEN3:
= 0: All the functions of the HDLC Receiver #3 is disabled.
= 1: All the functions of the HDLC Receiver #3 is enabled.

RDLEN2:
= 0: All the functions of the HDLC Receiver #2 is disabled.
= 1: All the functions of the HDLC Receiver #2 is enabled.

RDLEN1:
= 0: All the functions of the HDLC Receiver #1 is disabled.
= 1: All the functions of the HDLC Receiver #1 is enabled.

E1 RHDLC1 Assignment (08CH, 18CH, 28CH, 38CH)

Bit No.	7	6	5	4	3	2	1	0
Bit Name	Reserved	EVEN	ODD	TS4	TS3	TS2	TS1	TS0
Type		R/W	R/W	R/W	R/W	R/W	R/W	R/W
Default		0	0	0	0	0	0	0

E1 RHDLC2 Assignment (08DH, 18DH, 28DH, 38DH)

Bit No.	7	6	5	4	3	2	1	0
Bit Name	Reserved	EVEN	ODD	TS4	TS3	TS2	TS1	TS0
Type		R/W	R/W	R/W	R/W	R/W	R/W	R/W
Default		0	0	0	0	0	0	0

E1 RHDLC3 Assignment (08EH, 18EH, 28EH, 38EH)

Bit No.	7	6	5	4	3	2	1	0
Bit Name	Reserved	EVEN	ODD	TS4	TS3	TS2	TS1	TS0
Type		R/W	R/W	R/W	R/W	R/W	R/W	R/W
Default		0	0	0	0	0	0	0

The function of the above three sets of registers are the same. However, they correspond to different RHDLC.

EVEN:

= 0: The data is not extracted from the even frames.
= 1: The data is extracted from the even frames.
The even frames are FAS frames.

ODD:

= 0: The data is not extracted from the odd frames.
= 1: The data is extracted from the odd frames.
The odd frames are NFAS frames.

TS[4:0]:

These bits binary define one timeslot of even and/or odd frames to extract the data from. They are invalid when the EVEN bit and the ODD bit are both ‘0’.

E1 RHDLC1 Bit Select (08FH, 18FH, 28FH, 38FH)

Bit No.	7	6	5	4	3	2	1	0
Bit Name	BITEN7	BITEN6	BITEN5	BITEN4	BITEN3	BITEN2	BITEN1	BITEN0
Type	R/W	R/W	R/W	R/W	R/W	R/W	R/W	R/W
Default	0	0	0	0	0	0	0	0

E1 RHDLC2 Bit Select (090H, 190H, 290H, 390H)

Bit No.	7	6	5	4	3	2	1	0
Bit Name	BITEN7	BITEN6	BITEN5	BITEN4	BITEN3	BITEN2	BITEN1	BITEN0
Type	R/W	R/W	R/W	R/W	R/W	R/W	R/W	R/W
Default	0	0	0	0	0	0	0	0

E1 RHDLC3 Bit Select (091H, 191H, 291H, 391H)

Bit No.	7	6	5	4	3	2	1	0
Bit Name	BITEN7	BITEN6	BITEN5	BITEN4	BITEN3	BITEN2	BITEN1	BITEN0
Type	R/W	R/W	R/W	R/W	R/W	R/W	R/W	R/W
Default	0	0	0	0	0	0	0	0

The function of the above three sets of registers are the same. However, they correspond to different RHDLC.

BITENn:

= 0: The data is not extracted from the corresponding bit.
= 1: The data is extracted from the corresponding bit of the assigned channel.
These bits are invalid when the EVEN bit and the ODD bit are both logic 0.
The BITEN[7] bit corresponds to the first bit (MSB) of the selected channel.

E1 RHDLC1 Control Register (092H, 192H, 292H, 392H)

Bit No.	7	6	5	4	3	2	1	0
Bit Name	Reserved		LSSUFIL	FISUFIL	ADRM1	ADRM0	RHDLCM	RRST
Type			R/W	R/W	R/W	R/W	R/W	R/W
Default			0	0	0	0	0	0

E1 RHDLC2 Control Register (093H, 193H, 293H, 393H)

Bit No.	7	6	5	4	3	2	1	0
Bit Name	Reserved		LSSUFIL	FISUFIL	ADRM1	ADRM0	RHDLCM	RRST
Type			R/W	R/W	R/W	R/W	R/W	R/W
Default			0	0	0	0	0	0

E1 RHDLC3 Control Register (094H, 194H, 294H, 394H)

Bit No.	7	6	5	4	3	2	1	0
Bit Name	Reserved		LSSUFIL	FISUFIL	ADRM1	ADRM0	RHDLCM	RRST
Type			R/W	R/W	R/W	R/W	R/W	R/W
Default			0	0	0	0	0	0

The function of the above three sets of registers are the same. However, they correspond to different RHDLC.

LSSUFIL:

This bit is valid when the SS7 packet is LSSU.
= 0: The current LSSU is not compared with the previous one.
= 1: The current LSSU is compared with the previous one. The current LSSU will be discarded if it is the same with the previous LSSU.

FISUFIL:

This bit is valid when the SS7 packet is FISU.
= 0: The current FISU is not compared with the previous one.
= 1: The current FISU is compared with the previous one. The current FISU will be discarded if it is the same with the previous FISU.

ADRM[1:0]:

These two bits select the address comparison mode in HDLC mode.
= 00: No address is compared.
= 01: High byte address is compared.
= 10: Low byte address is compared.
= 11: Both high byte address and low byte address are compared.

RHDLCM:

= 0: HDLC mode is selected.
= 1: SS7 mode is selected.

RRST:

A transition from ‘0’ to ‘1’ on the this bit will reset the corresponding HDLC Receiver. The reset will clear the FIFO, the PACK bit (b0, E1-095H,... / 096H,... / 097H,...) and the EMP bit (b1, E1-095H,... / 096H,... / 097H,...).

E1 RHDLC1 RFIFO Access Status (095H, 195H, 295H, 395H)

Bit No.	7	6	5	4	3	2	1	0
Bit Name	Reserved						EMP	PACK
Type							R	R
Default							1	0

E1 RHDLC2 RFIFO Access Status (096H, 196H, 296H, 396H)

Bit No.	7	6	5	4	3	2	1	0
Bit Name	Reserved						EMP	PACK
Type							R	R
Default							1	0

E1 RHDLC3 RFIFO Access Status (097H, 197H, 297H, 397H)

Bit No.	7	6	5	4	3	2	1	0
Bit Name	Reserved						EMP	PACK
Type							R	R
Default							1	0

The function of the above three sets of registers are the same. However, they correspond to different RHDLC.

EMP:

= 0: All valid HDLC/SS7 blocks are pushed into the FIFO.
= 1: The FIFO is empty, i.e., all the blocks are read from the FIFO.
The corresponding HDLC Receiver reset will clear this bit.

PACK:

= 0: The byte read from the FIFO is not an overhead byte.
= 1: The byte read from the FIFO is an overhead byte.
The corresponding HDLC Receiver reset will clear this bit.

E1 RHDLC1 Data (098H, 198H, 298H, 398H)

Bit No.	7	6	5	4	3	2	1	0
Bit Name	DAT7	DAT6	DAT5	DAT4	DAT3	DAT2	DAT1	DAT0
Type	R	R	R	R	R	R	R	R
Default	0	0	0	0	0	0	0	0

E1 RHDLC2 Data (099H, 199H, 299H, 399H)

Bit No.	7	6	5	4	3	2	1	0
Bit Name	DAT7	DAT6	DAT5	DAT4	DAT3	DAT2	DAT1	DAT0
Type	R	R	R	R	R	R	R	R
Default	0	0	0	0	0	0	0	0

E1 RHDLC3 Data (09AH, 19AH, 29AH, 39AH)

Bit No.	7	6	5	4	3	2	1	0
Bit Name	DAT7	DAT6	DAT5	DAT4	DAT3	DAT2	DAT1	DAT0
Type	R	R	R	R	R	R	R	R
Default	0	0	0	0	0	0	0	0

The function of the above three sets of registers are the same. However, they correspond to different RHDLC.

DAT[7:0]:

These bits represent the bytes read from the FIFO. The DAT[0] bit corresponds to the first bit of the serial received data from the FIFO.

E1 RHDLC1 Interrupt Control (09BH, 19BH, 29BH, 39BH)

Bit No.	7	6	5	4	3	2	1	0
Bit Name	Reserved						OVFLE	RMBEE
Type							R/W	R/W
Default							0	0

E1 RHDLC2 Interrupt Control (09CH, 19CH, 29CH, 39CH)

Bit No.	7	6	5	4	3	2	1	0
Bit Name	Reserved						OVFLE	RMBEE
Type							R/W	R/W
Default							0	0

E1 RHDLC3 Interrupt Control (09DH, 19DH, 29DH, 39DH)

Bit No.	7	6	5	4	3	2	1	0
Bit Name	Reserved						OVFLE	RMBEE
Type							R/W	R/W
Default							0	0

The function of the above three sets of registers are the same. However, they correspond to different RHDLC.

OVFLE:

= 0: Disable the interrupt on the $\overline{INT}$ pin when the OVFLI bit (b1, E1-09EH,... / 09FH,... / 0A0H,...) is ‘1’.

= 1: Enable the interrupt on the $\overline{INT}$ pin when the OVFLI bit (b1, E1-09EH,... / 09FH,... / 0A0H,...) is ‘1’.

RMBEE:

= 0: Disable the interrupt on the $\overline{INT}$ pin when the RMBEI bit (b0, E1-09EH,... / 09FH,... / 0A0H,...) is ‘1’.

= 1: Enable the interrupt on the $\overline{INT}$ pin when the RMBEI bit (b0, E1-09EH,... / 09FH,... / 0A0H,...) is ‘1’.

E1 RHDLC1 Interrupt Indication (09EH, 19EH, 29EH, 39EH)

Bit No.	7	6	5	4	3	2	1	0
Bit Name	Reserved						OVFLI	RMBEI
Type							R	R
Default							0	0

E1 RHDLC2 Interrupt Indication (09FH, 19FH, 29FH, 39FH)

Bit No.	7	6	5	4	3	2	1	0
Bit Name	Reserved						OVFLI	RMBEI
Type							R	R
Default							0	0

E1 RHDLC3 Interrupt Indication (0A0H, 1A0H, 2A0H, 3A0H)

Bit No.	7	6	5	4	3	2	1	0
Bit Name	Reserved						OVFLI	RMBEI
Type							R	R
Default							0	0

The function of the above three sets of registers are the same. However, they correspond to different RHDLC.

OVFLI:

The overwritten condition will occur if data is still attempted to write into the FIFO when the FIFO has already been full (128 bytes).
= 0: No overwriting occurs.
= 1: The overwriting occurs.
This bit will be cleared if a ’1’ is written to it.

RMBEI:

= 0: No block is pushed into the FIFO.
= 1: A block of the HDLC/SS7 packet is pushed into the FIFO.
This bit will be cleared if a ’1’ is written to it.

E1 RHDLC1 High Address (0A1H, 1A1H, 2A1H, 3A1H)

Bit No.	7	6	5	4	3	2	1	0
Bit Name	HA7	HA6	HA5	HA4	HA3	HA2	HA1	HA0
Type	R/W	R/W	R/W	R/W	R/W	R/W	R/W	R/W
Default	0	0	0	0	0	0	0	0

E1 RHDLC2 High Address (0A2H, 1A2H, 2A2H, 3A2H)

Bit No.	7	6	5	4	3	2	1	0
Bit Name	HA7	HA6	HA5	HA4	HA3	HA2	HA1	HA0
Type	R/W	R/W	R/W	R/W	R/W	R/W	R/W	R/W
Default	0	0	0	0	0	0	0	0

E1 RHDLC3 High Address (0A3H, 1A3H, 2A3H, 3A3H)

Bit No.	7	6	5	4	3	2	1	0
Bit Name	HA7	HA6	HA5	HA4	HA3	HA2	HA1	HA0
Type	R/W	R/W	R/W	R/W	R/W	R/W	R/W	R/W
Default	0	0	0	0	0	0	0	0

The function of the above three sets of registers are the same. However, they correspond to different RHDLC.

HA[7:0]:

In HDLC mode, when high byte address comparison or both bytes address comparison is required, the high byte address position (the byte following the opening flag) is compared with the value in these bits, or with ‘0xFC’ or ‘0xFE’. The HA[1] bit (the ‘C/R’ bit position) is excluded to compare.

E1 RHDLC1 Low Address (0A4H, 1A4H, 2A4H, 3A4H)

Bit No.	7	6	5	4	3	2	1	0
Bit Name	LA7	LA6	LA5	LA4	LA3	LA2	LA1	LA0
Type	R/W	R/W	R/W	R/W	R/W	R/W	R/W	R/W
Default	0	0	0	0	0	0	0	0

E1 RHDLC2 Low Address (0A5H, 1A5H, 2A5H, 3A5H)

Bit No.	7	6	5	4	3	2	1	0
Bit Name	LA7	LA6	LA5	LA4	LA3	LA2	LA1	LA0
Type	R/W	R/W	R/W	R/W	R/W	R/W	R/W	R/W
Default	0	0	0	0	0	0	0	0

E1 RHDLC3 Low Address (0A6H, 1A6H, 2A6H, 3A6H)

Bit No.	7	6	5	4	3	2	1	0
Bit Name	LA7	LA6	LA5	LA4	LA3	LA2	LA1	LA0
Type	R/W	R/W	R/W	R/W	R/W	R/W	R/W	R/W
Default	0	0	0	0	0	0	0	0

The function of the above three sets of registers are the same. However, they correspond to different RHDLC.

LA[7:0]:

In HDLC mode, when low byte address comparison is required, the high byte address position (the byte following the opening flag) is compared with the value in these bits. When both bytes address comparison is required, the low byte address position (the byte following the high byte address position) is compared with the value in these bits.

E1 THDLC1 Control (0A7H, 1A7H, 2A7H, 3A7H)

Bit No.	7	6	5	4	3	2	1	0
Bit Name	Reserved		AUTOFISU	EOM	XREP	ABORT	THDLCM	TRST
Type			R/W	R/W	R/W	R/W	R/W	R/W
Default			0	0	0	0	0	0

E1 THDLC2 Control (0A8H, 1A8H, 2A8H, 3A8H)

Bit No.	7	6	5	4	3	2	1	0
Bit Name	Reserved		AUTOFISU	EOM	XREP	ABORT	THDLCM	TRST
Type			R/W	R/W	R/W	R/W	R/W	R/W
Default			0	0	0	0	0	0

E1 THDLC3 Control (0A9H, 1A9H, 2A9H, 3A9H)

Bit No.	7	6	5	4	3	2	1	0
Bit Name	Reserved		AUTOFISU	EOM	XREP	ABORT	THDLCM	TRST
Type			R/W	R/W	R/W	R/W	R/W	R/W
Default			0	0	0	0	0	0

The function of the above three sets of registers are the same. However, they correspond to different THDLC.

AUTOFISU:

This bit is valid in SS7 mode when there is no data in the FIFO to be transmitted.

= 0: Normal operation.

= 1: The 7E (Hex) flags is transmitted N times (the ‘N’ is determined by the FL[1:0] bits (b5~4, E1-0AAH,... / 0ABH,... / 0ACH,...)), then the FISU packet is transmitted with the BSN and FSN the same with the last transmitted packet.

EOM:

A transition from ‘0’ to ‘1’ on this bit indicates an entire HDLC/SS7 packet is stored in the FIFO and starts the packet transmission.

XREP:

In SS7 mode, when the FIFO is empty and less than 16 bytes are written into the FIFO, these bytes can be transmitted repeatedly with the opening flag, FCS and closing flag. This bit determines whether this cyclic transmission can be implemented.

= 0: Disable the cyclic transmission.

= 1: Enable the cyclic transmission.

ABORT:

= 0: Disable the manual abort sequence insertion.

= 1: The abort sequence (‘01111111’) is manually inserted to the current HDLC/SS7 packet.

This bit is self-cleared after the abortion.

THDLCM:

= 0: HDLC mode is selected.

= 1: SS7 mode is selected.

TRST:

A transition from ‘0’ to ‘1’ on the this bit resets the corresponding HDLC Transmitter. The reset will clear the FIFO.

E1 TFIFO1 Threshold (0AAH, 1AAH, 2AAH, 3AAH)

Bit No.	7	6	5	4	3	2	1	0
Bit Name	Reserved		FL1	FL0	LL1	LL0	HL1	HL0
Type			R/W	R/W	R/W	R/W	R/W	R/W
Default			1	0	0	0	0	1

E1 TFIFO2 Threshold (0ABH, 1ABH, 2ABH, 3ABH)

Bit No.	7	6	5	4	3	2	1	0
Bit Name	Reserved		FL1	FL0	LL1	LL0	HL1	HL0
Type			R/W	R/W	R/W	R/W	R/W	R/W
Default			1	0	0	0	0	1

E1 TFIFO3 Threshold (0ACH, 1ACH, 2ACH, 3ACH)

Bit No.	7	6	5	4	3	2	1	0
Bit Name	Reserved		FL1	FL0	LL1	LL0	HL1	HL0
Type			R/W	R/W	R/W	R/W	R/W	R/W
Default			1	0	0	0	0	1

The function of the above three sets of registers are the same. However, they correspond to different THDLC.

FL[1:0]:

These bits are valid in SS7 mode when there is no data in the FIFO to be transmitted and the AUTOFISU bit (b5, E1-0A7H,... / 0A8H,... / 0A9H,...) is ‘1’. They define how many times the 7E (Hex) flags is transmitted before the FISU packet transmission.

= 00: 8 flags
= 01: 16 flags
= 10: 32 flags
= 11: 64 flags

LL[1:0]:

These 2 bits set the lower threshold of the FIFO. If the fill level is below the lower threshold, an interrupt may be generated.

= 00: 16 bytes
= 01: 32 bytes
= 10: 64 bytes
= 11: 96 bytes

HL[1:0]:

These 2 bits set the upper threshold of the FIFO. Once the fill level exceeds the upper threshold, the data stored in the FIFO will start to be transmitted.

= 00: 16 bytes
= 01: 32 bytes
= 10: 64 bytes
= 11: 128 bytes

E1 THDLC1 Data (0ADH, 1ADH, 2ADH, 3ADH)

Bit No.	7	6	5	4	3	2	1	0
Bit Name	DAT7	DAT6	DAT5	DAT4	DAT3	DAT2	DAT1	DAT0
Type	R/W	R/W	R/W	R/W	R/W	R/W	R/W	R/W
Default	0	0	0	0	0	0	0	0

E1 THDLC2 Data (0AEH, 1AEH, 2AEH, 3AEH)

Bit No.	7	6	5	4	3	2	1	0
Bit Name	DAT7	DAT6	DAT5	DAT4	DAT3	DAT2	DAT1	DAT0
Type	R/W	R/W	R/W	R/W	R/W	R/W	R/W	R/W
Default	0	0	0	0	0	0	0	0

E1 THDLC3 Data (0AFH, 1AFH, 2AFH, 3AFH)

Bit No.	7	6	5	4	3	2	1	0
Bit Name	DAT7	DAT6	DAT5	DAT4	DAT3	DAT2	DAT1	DAT0
Type	R/W	R/W	R/W	R/W	R/W	R/W	R/W	R/W
Default	0	0	0	0	0	0	0	0

The function of the above three sets of registers are the same. However, they correspond to different THDLC.

DAT[7:0]:

The bytes are to be stored in the FIFO. The DAT[0] bit corresponds to the first bit of the serial data in the FIFO to be transmitted.

E1 TFIFO1 Status (0B0H, 1B0H, 2B0H, 3B0H)

Bit No.	7	6	5	4	3	2	1	0
Bit Name	Reserved					FUL	EMP	RDY
Type						R	R	R
Default						0	1	1

E1 TFIFO2 Status (0B1H, 1B1H, 2B1H, 3B1H)

Bit No.	7	6	5	4	3	2	1	0
Bit Name	Reserved					FUL	EMP	RDY
Type						R	R	R
Default						0	1	1

E1 TFIFO3 Status (0B2H, 1B2H, 2B2H, 3B2H)

Bit No.	7	6	5	4	3	2	1	0
Bit Name	Reserved					FUL	EMP	RDY
Type						R	R	R
Default						0	1	1

The function of the above three sets of registers are the same. However, they correspond to different THDLC.

FUL:
= 0: The FIFO is not full.
= 1: The FIFO is full of 128 bytes.

EMP:
= 0: The FIFO is not empty.
= 1: The FIFO is empty.

RDY:
= 0: The fill level of the FIFO is not below the lower threshold set by the LL[1:0] bits (b3~2, E1-0AAH,... / 0AB,... / 0ACH,...).
= 1: The fill level of the FIFO is below the lower threshold set by the LL[1:0] bits (b3~2, E1-0AAH,... / 0ABH,... / 0ACH,...).

E1 THDLC1 Interrupt Control (0B3H, 1B3H, 2B3H, 3B3H)

Bit No.	7	6	5	4	3	2	1	0
Bit Name	Reserved						UDRUNE	RDYE
Type							R/W	R/W
Default							0	0

E1 THDLC2 Interrupt Control (0B4H, 1B4H, 2B4H, 3B4H)

Bit No.	7	6	5	4	3	2	1	0
Bit Name	Reserved						UDRUNE	RDYE
Type							R/W	R/W
Default							0	0

E1 THDLC3 Interrupt Control (0B5H, 1B5H, 2B5H, 3B5H)

Bit No.	7	6	5	4	3	2	1	0
Bit Name	Reserved						UDRUNE	RDYE
Type							R/W	R/W
Default							0	0

The function of the above three sets of registers are the same. However, they correspond to different THDLC.

UDRUNE:

= 0: Disable the interrupt on the $\overline{INT}$ pin when the UDRUNI bit (b1, E1-0B6H,... / 0B7H,... / 0B8H,...) is ‘1’.

= 1: Enable the interrupt on the $\overline{INT}$ pin when the UDRUNI bit (b1, E1-0B6H,... / 0B7H,... / 0B8H,...) is ‘1’.

RDYE:

= 0: Disable the interrupt on the $\overline{INT}$ pin when the RDYI bit (b0, E1-0B6H,... / 0B7H,... / 0B8H,...) is ‘1’.

= 1: Enable the interrupt on the $\overline{INT}$ pin when the RDYI bit (b0, E1-0B6H,... / 0B7H,... / 0B8H,...) is ‘1’.

E1 THDLC1 Interrupt Indication (0B6H, 1B6H, 2B6H, 3B6H)

Bit No.	7	6	5	4	3	2	1	0
Bit Name	Reserved						UDRUNI	RDYI
Type							R	R
Default							0	0

E1 THDLC2 Interrupt Indication (0B7H, 1B7H, 2B7H, 3B7H)

Bit No.	7	6	5	4	3	2	1	0
Bit Name	Reserved						UDRUNI	RDYI
Type							R	R
Default							0	0

E1 THDLC3 Interrupt Indication (0B8H, 1B8H, 2B8H, 3B8H)

Bit No.	7	6	5	4	3	2	1	0
Bit Name	Reserved						UDRUNI	RDYI
Type							R	R
Default							0	0

The function of the above three sets of registers are the same. However, they correspond to different THDLC.

UDRUNI:

When the FIFO is empty and the last transmitted byte is not the end of the current HDLC/SS7 packet, the under-run occurs. This bit indicates whether the under-run occurs.

= 0: No under-run occurs.

= 1: Under-run occurs.

This bit will be cleared if a ’1’ is written to it.

RDYI:

= 0: There is no status change on the RDY bit (b0, E1-0B0H,... / 0B1H,... / 0B2H,...).

= 1: There is a transition (from ‘0’ to ‘1’) on the RDY bit (b0, E1-0B0H,... / 0B1H,... / 0B2H,...).

This bit will be cleared if a ’1’ is written to it.

E1 Alarm Status (0B9H, 1B9H, 2B9H, 3B9H)

Bit No.	7	6	5	4	3	2	1	0
Bit Name	Reserved		TS16LOSV	TS16AISV	RMAIV	AIS	RAIV	RED
Type			R	R	R	R	R	R
Default			0	0	0	0	0	0

TS16LOSV:

The LOS in TS16 is detected on the base of Basic frame synchronization.

= 0: The LOS in TS16 is cleared when 16 consecutive TS16 are not all received as ‘0’.

= 1: The LOS in TS16 is detected when 16 consecutive TS16 are all received as ‘0’.

TS16AISV:

The AIS in TS16 is detected on the base of Basic frame synchronization.

= 0: The AIS in TS16 is cleared when TS16 contains more than 3 zeros in a 16-consecutive-Basic-frame period.

= 1: The AIS in TS16 is detected when TS16 contains less than 4 zeros in each of two 16-consecutive-Basic-frame periods.

RMAIV:

The Remote Signaling Multi-Frame alarm is detected on the base of CAS Signaling Multi-Frame synchronization.

= 0: The Remote Signaling Multi-Frame alarm is cleared when a single Y bit is received as ‘0’.

= 1: The Remote Signaling Multi-Frame alarm is detected when 3 consecutive Y bits are received as ‘1’.

AIS:

= 0: The AIS alarm is cleared. That is, when the AISC bit (b1, E1-0BCH,...) is ‘0’, more than 2 zeros are detected in a 512-bit fixed window; when the AISC bit (b1, E1-0BCH,...) is ‘1’, more than 2 zeros are detected in each of 2 consecutive 512-bit fixed window.

= 1: The AIS alarm is detected. That is, when the AISC bit (b1, E1-0BCH,...) is ‘0’, less than 3 zeros are detected in a 512-bit fixed window and it is out of Basic frame synchronization; when the AISC bit (b1, E1-0BCH,...) is ‘1’, less than 3 zeros are detected in each of 2 consecutive 512-bit fixed window.

RAIV:

The Remote alarm is detected on the base of Basic frame synchronization.

= 0: The Remote alarm is cleared. That is, when the RAIC bit (b0, E1-0BCH,...) is ‘0’, a single A bit is received as ‘0’; when the RAIC bit (b0, E1-0BCH,...) is ‘1’, a single A bit is received as ‘0’.

= 1: The Remote alarm is detected. That is, when the RAIC bit (b0, E1-0BCH,...) is ‘0’, 4 consecutive A bits are received as ‘1’; when the RAIC bit (b0, E1-0BCH,...) is ‘1’, a single A bit is received as ‘1’.

RED:

= 0: The RED alarm is cleared when in Basic frame synchronization persists for 100ms.

= 1: The RED alarm is detected when out of Basic frame synchronization persists for 100ms.

E1 Alarm Control (0BAH, 1BAH, 2BAH, 3BAH)

Bit No.	7	6	5	4	3	2	1	0
Bit Name	Reserved		TS16LOSE	TS16AISE	RMAIE	AISE	RAIE	REDE
Type			R/W	R/W	R/W	R/W	R/W	R/W
Default			0	0	0	0	0	0

TS16LOSE:
= 0: Disable the interrupt on the $\overline{INT}$ pin when the TS16LOSI bit (b5, E1-0BBH,...) is ‘1’.
= 1: Enable the interrupt on the $\overline{INT}$ pin when the TS16LOSI bit (b5, E1-0BBH,...) is ‘1’.

TS16AISE:
= 0: Disable the interrupt on the $\overline{INT}$ pin when the TS16AISI bit (b4, E1-0BBH,...) is ‘1’.
= 1: Enable the interrupt on the $\overline{INT}$ pin when the TS16AISI bit (b4, E1-0BBH,...) is ‘1’.

RMAIE:
= 0: Disable the interrupt on the $\overline{INT}$ pin when the RMAII bit (b3, E1-0BBH,...) is ‘1’.
= 1: Enable the interrupt on the $\overline{INT}$ pin when the RMAII bit (b3, E1-0BBH,...) is ‘1’.

AISE:
= 0: Disable the interrupt on the $\overline{INT}$ pin when the AISI bit (b2, E1-0BBH,...) is ‘1’.
= 1: Enable the interrupt on the $\overline{INT}$ pin when the AISI bit (b2, E1-0BBH,...) is ‘1’.

RAIE:
= 0: Disable the interrupt on the $\overline{INT}$ pin when the RAII bit (b1, E1-0BBH,...) is ‘1’.
= 1: Enable the interrupt on the $\overline{INT}$ pin when the RAII bit (b1, E1-0BBH,...) is ‘1’.

REDE:
= 0: Disable the interrupt on the $\overline{INT}$ pin when the REDI bit (b0, E1-0BBH,...) is ‘1’.
= 1: Enable the interrupt on the $\overline{INT}$ pin when the REDI bit (b0, E1-0BBH,...) is ‘1’.

E1 Alarm Indication (0BBH, 1BBH, 2BBH, 3BBH)

Bit No.	7	6	5	4	3	2	1	0
Bit Name	Reserved		TS16LOSI	TS16AISI	RMAII	AISI	RAII	REDI
Type			R	R	R	R	R	R
Default			0	0	0	0	0	0

TS16LOSI:

= 0: There is no status change on the TS16LOSV bit (b5, E1-0B9H,...).
= 1: There is a transition (from ‘0’ to ‘1’ or from ‘1’ to ‘0’) on the TS16LOSV bit (b5, E1-0B9H,...).
This bit will be cleared if a ’1’ is written to it.

TS16AISI:

= 0: There is no status change on the TS16AISV bit (b4, E1-0B9H,...).
= 1: There is a transition (from ‘0’ to ‘1’ or from ‘1’ to ‘0’) on the TS16AISV bit (b4, E1-0B9H,...).
This bit will be cleared if a ’1’ is written to it.

RMAII:

= 0: There is no status change on the RMAIV bit (b3, E1-0B9H,...).
= 1: There is a transition (from ‘0’ to ‘1’ or from ‘1’ to ‘0’) on the RMAIV bit (b3, E1-0B9H,...).
This bit will be cleared if a ’1’ is written to it.

AISI:

= 0: There is no status change on the AIS bit (b2, E1-0B9H,...).
= 1: There is a transition (from ‘0’ to ‘1’ or from ‘1’ to ‘0’) on the AIS bit (b2, E1-0B9H,...).
This bit will be cleared if a ’1’ is written to it.

RAII:

= 0: There is no status change on the RAIV bit (b1, E1-0B9H,...).
= 1: There is a transition (from ‘0’ to ‘1’ or from ‘1’ to ‘0’) on the RAIV bit (b1, E1-0B9H,...).
This bit will be cleared if a ’1’ is written to it.

REDI:

= 0: There is no status change on the RED bit (b0, E1-0B9H,...).
= 1: There is a transition (from ‘0’ to ‘1’ or from ‘1’ to ‘0’) on the RED bit (b0, E1-0B9H,...).
This bit will be cleared if a ’1’ is written to it.

E1 Alarm Criteria Control (0BCH, 1BCH, 2BCH, 3BCH)

Bit No.	7	6	5	4	3	2	1	0
Bit Name	Reserved						AISC	RAIC
Type							R/W	R/W
Default							0	0

AISC:

This bit selects the AIS alarm detection criteria.

= 0: The criterion meets I.431. The AIS alarm will be declared when less than 3 zeros are detected in a 512-bit fixed window and it is out of Basic frame synchronization, and the AIS alarm will be cleared when more than 2 zeros are detected in a 512-bit fixed window.

= 1: The criterion meets G.775. The AIS alarm will be declared when less than 3 zeros are detected in each of 2 consecutive 512-bit fixed window, and the AIS alarm will be cleared when more than 2 zeros are detected in each of 2 consecutive 512-bit fixed window.

RAIC:

This bit selects the Remote alarm detection criterion.

= 0: The Remote alarm will be declared when 4 consecutive A bits are received as ‘1’, and the Remote alarm will be cleared when a single A bit is received as ‘0’.

= 1: The Remote alarm will be declared when a single A bit is received as ‘1’, and the Remote alarm will be cleared when a single A bit is received as ‘0’.

E1 PMON Control (0C2H, 1C2H, 2C2H, 3C2H)

Bit No.	7	6	5	4	3	2	1	0
Bit Name	Reserved						UPDAT	AUTOUPD
Type							R/W	R/W
Default							0	0

UPDAT:

A transition from ‘0’ to ‘1’ on this bit updates all the PMON indirect registers.

AUTOUPD:

= 0: Disable the automatic update function of the PMON indirect registers.

= 1: All the PMON indirect registers are updated every one second automatically.

E1 PMON Interrupt Control 0 (0C3H, 1C3H, 2C3H, 3C3H)

Bit No.	7	6	5	4	3	2	1	0
Bit Name	PRDGOVE	TFEBEOVE	FEBEOVE	TCRCOVE	COFAOVE	OOFOVE	FEROVE	CRCOVE
Type	R/W	R/W	R/W	R/W	R/W	R/W	R/W	R/W
Default	0	0	0	0	0	0	0	0

PRDGOVE:
= 0: Disable the interrupt on the $\overline{INT}$ pin when the PRDGOVI bit (b7, E1-0C5H,...) is ‘1’.
= 1: Enable the interrupt on the $\overline{INT}$ pin when the PRDGOVI bit (b7, E1-0C5H,...) is ‘1’.

TFEBEOVE:
= 0: Disable the interrupt on the $\overline{INT}$ pin when the TFEBEOVI bit (b6, E1-0C5H,...) is ‘1’.
= 1: Enable the interrupt on the $\overline{INT}$ pin when the TFEBEOVI bit (b6, E1-0C5H,...) is ‘1’.

FEBEOVE:
= 0: Disable the interrupt on the $\overline{INT}$ pin when the FEBEOVI bit (b5, E1-0C5H,...) is ‘1’.
= 1: Enable the interrupt on the $\overline{INT}$ pin when the FEBEOVI bit (b5, E1-0C5H,...) is ‘1’.

TCRCOVE:
= 0: Disable the interrupt on the $\overline{INT}$ pin when the TCRCOVI bit (b4, E1-0C5H,...) is ‘1’.
= 1: Enable the interrupt on the $\overline{INT}$ pin when the TCRCOVI bit (b4, E1-0C5H,...) is ‘1’.

COFAOVE:
= 0: Disable the interrupt on the $\overline{INT}$ pin when the COFAOVI bit (b3, E1-0C5H,...) is ‘1’.
= 1: Enable the interrupt on the $\overline{INT}$ pin when the COFAOVI bit (b3, E1-0C5H,...) is ‘1’.

OOFOVE:
= 0: Disable the interrupt on the $\overline{INT}$ pin when the OOFOVI bit (b2, E1-0C5H,...) is ‘1’.
= 1: Enable the interrupt on the $\overline{INT}$ pin when the OOFOVI bit (b2, E1-0C5H,...) is ‘1’.

FEROVE:
= 0: Disable the interrupt on the $\overline{INT}$ pin when the FEROVI bit (b1, E1-0C5H,...) is ‘1’.
= 1: Enable the interrupt on the $\overline{INT}$ pin when the FEROVI bit (b1, E1-0C5H,...) is ‘1’.

CRCOVE:
= 0: Disable the interrupt on the $\overline{INT}$ pin when the CRCOVI bit (b0, E1-0C5H,...) is ‘1’.
= 1: Enable the interrupt on the $\overline{INT}$ pin when the CRCOVI bit (b0, E1-0C5H,...) is ‘1’.

E1 PMON Interrupt Control 1 (0C4H, 1C4H, 2C4H, 3C4H)

Bit No.	7	6	5	4	3	2	1	0
Bit Name	Reserved							LCVOVE
Type								R/W
Default								0

LCVOVE:

= 0: Disable the interrupt on the $\overline{INT}$ pin when the LCVOVI bit (b0, E1-0C6H,...) is ‘1’.

= 1: Enable the interrupt on the $\overline{INT}$ pin when the LCVOVI bit (b0, E1-0C6H,...) is ‘1’.

E1 PMON Interrupt Indication 0 (0C5H, 1C5H, 2C5H, 3C5H)

Bit No.	7	6	5	4	3	2	1	0
Bit Name	PRDGOVI	TFEBEOVI	FEBEOVI	TCRCOVI	COFAOVI	OOFOVI	FEROVI	CRCOVI
Type	R	R	R	R	R	R	R	R
Default	0	0	0	0	0	0	0	0

PRDGOVI:
= 0: The PMON indirect PRGD Counter Mapping registers have not overflowed.
= 1: The PMON indirect PRGD Counter Mapping registers have overflowed.
This bit will be cleared if a ’1’ is written to it.

TFEBEOVI:
= 0: The PMON indirect TFEBE Counter Mapping registers have not overflowed.
= 1: The PMON indirect TFEBE Counter Mapping registers have overflowed.
This bit will be cleared if a ’1’ is written to it.

FEBEOVI:
= 0: The PMON indirect FEBE Counter Mapping registers have not overflowed.
= 1: The PMON indirect FEBE Counter Mapping registers have overflowed.
This bit will be cleared if a ’1’ is written to it.

TCRCOVI:
= 0: The PMON indirect DDSE Counter Mapping registers have not overflowed.
= 1: The PMON indirect DDSE Counter Mapping registers have overflowed.
This bit will be cleared if a ’1’ is written to it.

COFAOVI:
= 0: The PMON indirect COFA Counter Mapping register has not overflowed.
= 1: The PMON indirect COFA Counter Mapping register has overflowed.
This bit will be cleared if a ’1’ is written to it.

OOFOVI:
= 0: The PMON indirect OOF Counter Mapping register has not overflowed.
= 1: The PMON indirect OOF Counter Mapping register has overflowed.
This bit will be cleared if a ’1’ is written to it.

FEROVI:
= 0: The PMON indirect FER Counter Mapping registers have not overflowed.
= 1: The PMON indirect FER Counter Mapping registers have overflowed.
This bit will be cleared if a ’1’ is written to it.

CRCOVI:
= 0: The PMON indirect CRCE Counter Mapping registers have not overflowed.
= 1: The PMON indirect CRCE Counter Mapping registers have overflowed.
This bit will be cleared if a ’1’ is written to it.

E1 PMON Interrupt Indication 1 (0C6H, 1C6H, 2C6H, 3C6H)

Bit No.	7	6	5	4	3	2	1	0
Bit Name	Reserved							LCVOVI
Type								R
Default								0

LCVOVI:

= 0: The PMON indirect LCV Counter Mapping registers have not overflowed.

= 1: The PMON indirect LCV Counter Mapping registers have overflowed.

This bit will be cleared if a '1' is written to it.

E1 TPLC / RPLC / PRGD Test Configuration (0C7H, 1C7H, 2C7H, 3C7H)

Bit No.	7	6	5	4	3	2	1	0
Bit Name	Reserved				PRBSMODE1	PRBSMODE0	PRBSDIR	TESTEN
Type					R/W	R/W	R/W	R/W
Default					0	0	0	0

PRBSMODE[1:0]:

These two bits select one mode to extract/replace the data for the PRBS Generator/Detector.

= 00: The unframed mode is selected. All 32 timeslots are extracted/replaced and the per-timeslot configuration in the TEST bit (b6, E1-ID-41~4FH & 51~5FH) is ignored.

= 01: The 8-bit-based mode is selected. The received data will only be extracted/replaced on the timeslot configured by the TEST bit (b6, E1-ID-41~4FH & 51~5FH).

= 10: The 7-bit-based mode is selected. The received data will only be extracted/replaced on the 7 MSB of the timeslot configured by the TEST bit (b6, E1-ID-41~4FH & 51~5FH).

= 11: Reserved.

PRBSDIR:

= 0: The pattern in the PRBS Generator/Detector is generated in the transmit path and is detected in the receive path.

= 1: The pattern in the PRBS Generator/Detector is generated in the receive path and is detected in the transmit path.

TESTEN:

A transition from '0' to '1' on this bit initiates the PRBS Generator/Detector.

E1 TPLC Access Status (0C8H, 1C8H, 2C8H, 3C8H)

Bit No.	7	6	5	4	3	2	1	0
Bit Name	Reserved							BUSY
Type								R
Default								0

BUSY:

= 0: No reading or writing operation on the indirect registers.

= 1: An internal indirect register is being accessed. Any new operation on the internal indirect register is not allowed.

E1 TPLC Access Control (0C9H, 1C9H, 2C9H, 3C9H)

Bit No.	7	6	5	4	3	2	1	0
Bit Name	RWN	ADDRESS6	ADDRESS5	ADDRESS4	ADDRESS3	ADDRESS2	ADDRESS1	ADDRESS0
Type	R/W	R/W	R/W	R/W	R/W	R/W	R/W	R/W
Default	0	0	0	0	0	0	0	0

RWN:

= 0: Write the data to the specified indirect register.

= 1: Read the data to the specified indirect register.

ADDRESS[6:0]:

These bits specify the address of the indirect register (from 00H to 3FH & from 41H to 4FH & from 51H to 5FH) for the microprocessor access.

E1 TPLC Access Data (0CAH, 1CAH, 2CAH, 3CAH)

Bit No.	7	6	5	4	3	2	1	0
Bit Name	D7	D6	D5	D4	D3	D2	D1	D0
Type	R/W	R/W	R/W	R/W	R/W	R/W	R/W	R/W
Default	0	0	0	0	0	0	0	0

D[7:0]:

This register holds the value which will be read from or written into the indirect registers (from 00H to 3FH & from 41H to 4FH & from 51H to 5FH). If data is to be written into the indirect register, this register must be written before the target indirect register's address and RWN=0 is written into the TPLC Access Control register. If data is to be read from the indirect register, the target indirect register's address and RWN=1 must be written into the TPLC Access Control register first, then this register will contain the requested data byte.

E1 TPLC Configuration (0CBH, 1CBH, 2CBH, 3CBH)

Bit No.	7	6	5	4	3	2	1	0
Bit Name	SIGSNAP	GSTRKEN	Reserved			GSUBST2	GSUBST1	GSUBST0
Type	R/W	R/W				R/W	R/W	R/W
Default	1	0				0	0	0

SIGSNAP:

This bit is valid when the Signaling Multi-frame is generated.

= 0: Disable the signaling snapshot.

= 1: Enable the signaling snapshot. That is, the signaling bits of the first Basic frame are locked and input on the TSIGn/MTSIGA(MTSIGB) pin as the signaling bits of the current whole Signaling Multi-frame.

GSTRKEN:

= 0: The replacement is performed on a per-timeslot basis by setting the STRKEN bit (b4, E1-ID-41~4FH & 51~5FH) in the corresponding timeslot.

= 1: The signaling bits (ABCD) of all timeslots are replaced by the signaling trunk conditioning code in the A,B,C,D bits (b3~0, E1-ID-41~4FH & 51~5FH).

GSUBST[2:0]:

These bits select the replacement of all the channels.

GSUBST[2:0]	Replacement Selection
0 0 0	The replacement is performed on a per-timeslot basis by setting the SUBST[2:0] bits (b7~5, E1-ID-00~1FH) in the corresponding timeslot.
0 0 1	The data of all timeslots is replaced by the data trunk code set in the DTRK[7:0] bits (b7~0, E1-ID-20~3FH).
0 1 0	The data of all timeslots is replaced by the A-Law digital milliwatt pattern.
0 1 1	The data of all timeslots is replaced by the μ-Law digital milliwatt pattern.
1 0 0	The data of all timeslots is replaced by the payload loopback code extracted from the Elastic Store Buffer in the receive path.
others	Reserved.

E1 TPLC Control Enable (0CCH, 1CCH, 2CCH, 3CCH)

Bit No.	7	6	5	4	3	2	1	0
Bit Name	Reserved							PCCE
Type								R/W
Default								0

PCCE:

= 0: Disable all the functions in the Transmit Payload Control.

= 1: Enable all the functions in the Transmit Payload Control.

E1 RPLC Access Status (0CDH, 1CDH, 2CDH, 3CDH)

Bit No.	7	6	5	4	3	2	1	0
Bit Name	Reserved							BUSY
Type								R
Default								0

BUSY:
= 0: No reading or writing operation on the indirect registers.
= 1: An internal indirect register is being accessed. Any new operation on the internal indirect register is not allowed.

E1 RPLC Access Control (0CEH, 1CEH, 2CEH, 3CEH)

Bit No.	7	6	5	4	3	2	1	0
Bit Name	RWN	ADDRESS6	ADDRESS5	ADDRESS4	ADDRESS3	ADDRESS2	ADDRESS1	ADDRESS0
Type	R/W	R/W	R/W	R/W	R/W	R/W	R/W	R/W
Default	0	0	0	0	0	0	0	0

RWN:
= 0: Write the data to the specified indirect register.
= 1: Read the data to the specified indirect register.

ADDRESS[6:0]:
These bits specify the address of the indirect register (from 00H to 3FH & from 41H to 4FH & from 51H to 5FH) for the microprocessor access.

E1 RPLC Access Data (0CFH, 1CFH, 2CFH, 3CFH)

Bit No.	7	6	5	4	3	2	1	0
Bit Name	D7	D6	D5	D4	D3	D2	D1	D0
Type	R/W	R/W	R/W	R/W	R/W	R/W	R/W	R/W
Default	0	0	0	0	0	0	0	0

D[7:0]:
This register holds the value which will be read from or written into the indirect registers (from 00H to 3FH & from 41H to 4FH & from 51H to 5FH). If data is to be written into the indirect register, this register must be written before the target indirect register's address and RWN=0 is written into the RPLC Access Control register. If data is to be read from the indirect register, the target indirect register's address and RWN=1 must be written into the RPLC Access Control register first, then this register will contain the requested data byte.

E1 RPLC Configuration (0D0H, 1D0H, 2D0H, 3D0H)

Bit No.	7	6	5	4	3	2	1	0
Bit Name	SIGSNAP	GSTRKEN	Reserved			GSUBST2	GSUBST1	GSUBST0
Type	R/W	R/W				R/W	R/W	R/W
Default	0	0				0	0	0

SIGSNAP:

This bit is valid when Signaling Multi-frame is in synchronization.

= 0: Disable the signaling snapshot.

= 1: Enable the signaling snapshot. That is, the signaling bits of the first Basic frame are locked and output on the RSIGn/MRSIGA(MRSIGB) pin as the signaling bits of the current whole Signaling Multi-frame.

GSTRKEN:

= 0: The replacement is performed on a per-timeslot basis by setting the STRKEN bit (b4, E1-ID-41~4FH & 51~5FH) in the corresponding timeslot.

= 1: The signaling bits (ABCD) of all timeslots are replaced by the signaling trunk conditioning code in the A,B,C,D bits (b3~0, E1-ID-41~4FH & 51~5FH).

GSUBST[2:0]:

These bits select the replacement of all the timeslots.

GSUBST[2:0]	Replacement Selection
000	The replacement is performed on a per-timeslot basis by setting the SUBST[2:0] bits (b7~5, E1-ID-00~1FH) in the corresponding timeslot.
001	The data of all timeslots is replaced by the data trunk code set in the DTRK[7:0] bits (b7~0, E1-ID-20~3FH).
010	The data of all timeslots is replaced by the A-Law digital milliwatt pattern.
011	The data of all timeslots is replaced by the μ-Law digital milliwatt pattern.
the others	Reserved.

E1 RPLC Control Enable (0D1H, 1D1H, 2D1H, 3D1H)

Bit No.	7	6	5	4	3	2	1	0
Bit Name	Reserved							PCCE
Type								R/W
Default								0

PCCE:
= 0: Disable all the functions in the Receive Payload Control.
= 1: Enable all the functions in the Receive Payload Control.

E1 RCRB Configuration (0D2H, 1D2H, 2D2H, 3D2H)

Bit No.	7	6	5	4	3	2	1	0
Bit Name	Reserved				FREEZE	DEB	SIGE	Reserved
Type					R/W	R/W	R/W	
Default					0	0	0	

FREEZE:
= 0: Disable the manual signaling freezing.
= 1: Manually freeze the signaling data in the A,B,C,D bits (b3~0, E1-ID-01~0FH & 11~1FH) as the previous valid value.

DEB:
= 0: Disable the signaling de-bounce.
= 1: Enable the signaling de-bounce. That is, the A,B,C,D bits (b3~0, E1-ID-01~0FH & 11~1FH) are updated only if 2 consecutive received ABCD codeword of the same timeslot are identical.

SIGE:
= 0: Disable the interrupt on the $\overline{INT}$ pin when any of the COSI bits (E1-0D9H,... & E1-0D8H,... & E1-0D7H,... & E1-0D6H,...) is ‘1’.
= 1: Enable the interrupt on the $\overline{INT}$ pin when any of the COSI bits (E1-0D9H,... & E1-0D8H,... & E1-0D7H,... & E1-0D6H,...) is ‘1’.

E1 RCRB Access Status (0D3H, 1D3H, 2D3H, 3D3H)

Bit No.	7	6	5	4	3	2	1	0
Bit Name	Reserved							BUSY
Type								R
Default								0

BUSY:

= 0: No reading or writing operation on the indirect registers.

= 1: An internal indirect register is being accessed. Any new operation on the internal indirect register is not allowed.

E1 RCRB Access Control (0D4H, 1D4H, 2D4H, 3D4H)

Bit No.	7	6	5	4	3	2	1	0
Bit Name	RWN	ADDRESS6	ADDRESS5	ADDRESS4	ADDRESS3	ADDRESS2	ADDRESS1	ADDRESS0
Type	R/W	R/W	R/W	R/W	R/W	R/W	R/W	R/W
Default	0	0	0	0	0	0	0	0

RWN:

= 0: Write the data to the specified indirect register.

= 1: Read the data to the specified indirect register.

ADDRESS[6:0]:

These bits specify the address of the indirect register (from 01H to 0FH & from 11H to 1FH) for the microprocessor access.

E1 RCRB Access Data (0D5H, 1D5H, 2D5H, 3D5H)

Bit No.	7	6	5	4	3	2	1	0
Bit Name	DAT7	DAT6	DAT5	DAT4	DAT3	DAT2	DAT1	DAT0
Type	R/W	R/W	R/W	R/W	R/W	R/W	R/W	R/W
Default	0	0	0	0	0	0	0	0

DAT[7:0]:

This register holds the value which will be read from or written into the indirect registers (from 01H to 0FH & from 11H to 1FH). If data is to be written into the indirect register, this register must be written before the target indirect register's address and RWN=0 is written into the RCRB Access Control register. If data is to be read from the indirect register, the target indirect register's address and RWN=1 must be written into the RCRB Access Control register first, then this register will contain the requested data byte.

E1 RCRB State Change Indication 0 (0D6H, 1D6H, 2D6H, 3D6H)

Bit No.	7	6	5	4	3	2	1	0
Bit Name	COSI8	COSI7	COSI6	COSI5	COSI4	COSI3	COSI2	COSI1
Type	R	R	R	R	R	R	R	R
Default	0	0	0	0	0	0	0	0

COSI[X]:

= 0: The signaling bits in its corresponding timeslot is not changed.

= 1: The signaling bits in its corresponding timeslot is changed.

The corresponding bit will be cleared if a ‘1’ is written to it. The COSI[8:1] bits correspond to timeslot 8 ~ 1 respectively.

E1 RCRB State Change Indication 1 (0D7H, 1D7H, 2D7H, 3D7H)

Bit No.	7	6	5	4	3	2	1	0
Bit Name	COSI16	COSI15	COSI14	COSI13	COSI12	COSI11	COSI10	COSI9
Type	R	R	R	R	R	R	R	R
Default	0	0	0	0	0	0	0	0

COSI[X]:

= 0: The signaling bits in its corresponding timeslot is not changed.

= 1: The signaling bits in its corresponding timeslot is changed.

The corresponding bit will be cleared if a ‘1’ is written to it. The COSI[16] bit corresponds to timeslot 17. The COSI[15:9] bits correspond to timeslot 15 ~ 9 respectively.

E1 RCRB State Change Indication 2 (0D8H, 1D8H, 2D8H, 3D8H)

Bit No.	7	6	5	4	3	2	1	0
Bit Name	COSI24	COSI23	COSI22	COSI21	COSI20	COSI19	COSI18	COSI17
Type	R	R	R	R	R	R	R	R
Default	0	0	0	0	0	0	0	0

COSI[X]:

= 0: The signaling bits in its corresponding timeslot is not changed.

= 1: The signaling bits in its corresponding timeslot is changed.

The corresponding bit will be cleared if a ‘1’ is written to it. The COSI[24:17] bits correspond to timeslot 25 ~ 18 respectively.

E1 RCRB State Change Indication 3 (0D9H, 1D9H, 2D9H, 3D9H)

Bit No.	7	6	5	4	3	2	1	0
Bit Name	Reserved		COSI30	COSI29	COSI28	COSI27	COSI26	COSI25
Type			R	R	R	R	R	R
Default			0	0	0	0	0	0

COSI[X]:

= 0: The signaling bits in its corresponding timeslot is not changed.

= 1: The signaling bits in its corresponding timeslot is changed.

The corresponding bit will be cleared if a ‘1’ is written to it. The COSI[30:25] bits correspond to timeslot 31 ~ 26 respectively.

5.2.2.2 Indirect Register

PMON:

The PMON Counter Mapping Registers (00H ~ 0FH) of a link are updated as a group in the following three ways:

1. A transition from ‘0’ to ‘1’ on the UPDAT bit (b1, E1-0C2H,...) updates all the registers;
2. If the AUTOUPD bit (b0, E1-0C2H,...) is set to ‘1’, the registers will be updated every one second;

E1 CRCE Counter Mapping 0 (00H)

Bit No.	7	6	5	4	3	2	1	0
Bit Name	CRCE7	CRCE6	CRCE5	CRCE4	CRCE3	CRCE2	CRCE1	CRCE0
Type	R	R	R	R	R	R	R	R
R	0	0	0	0	0	0	0	0

CRCE[7:0]:

These bits together with the CRCE[9:8] bits count the CRC-4 Error numbers. The CRCE[0] bit is the LSB.

E1 CRCE Counter Mapping 1 (01H)

Bit No.	7	6	5	4	3	2	1	0
Bit Name	Reserved						CRCE9	CRCE8
Type							R	R
Default							0	0

CRCE[9:8]:

These bits together with the CRCE[7:0] bits count the CRC-4 Error numbers. The CRCE[9] bit is the MSB.

E1 FER Counter Mapping 0 (02H)

Bit No.	7	6	5	4	3	2	1	0
Bit Name	FER7	FER6	FER5	FER4	FER3	FER2	FER1	FER0
Type	R	R	R	R	R	R	R	R
Default	0	0	0	0	0	0	0	0

FER[7:0]:

These bits together with the FER[11:8] bits count the FAS/NFAS Bit/Pattern Error numbers. The FER[0] bit is the LSB.

E1 FER Counter Mapping 1 (03H)

Bit No.	7	6	5	4	3	2	1	0
Bit Name	Reserved				FER11	FER10	FER9	FER8
Type					R	R	R	R
Default					0	0	0	0

FER[11:8]:

These bits together with the FER[7:0] bits count the FAS/NFAS Bit/Pattern Error numbers. The FER[11] bit is the MSB.

E1 COFA Counter Mapping (04H)

Bit No.	7	6	5	4	3	2	1	0
Bit Name	Reserved					COFA2	COFA1	COFA0
Type						R	R	R
Default						0	0	0

COFA[2:0]:

These bits count the times of the new-found Basic frame alignment pattern position being different from the previous one events.

E1 OOF Counter Mapping (05H)

Bit No.	7	6	5	4	3	2	1	0
Bit Name	Reserved			OOF4	OOF3	OOF2	OOF1	OOF0
Type				R	R	R	R	R
Default				0	0	0	0	0

OOF[4:0]:

These bits count the times of out of Basic frame synchronization events.

E1 PRGD Counter Mapping 0 (06H)

Bit No.	7	6	5	4	3	2	1	0
Bit Name	PRGD7	PRGD6	PRGD5	PRGD4	PRGD3	PRGD2	PRGD1	PRGD0
Type	R	R	R	R	R	R	R	R
Default	0	0	0	0	0	0	0	0

PRGD[7:0]:

These bits together with the PRGD[15:8] bits count the PRGD Bit Error numbers. The PRGD[0] bit is the LSB.

E1 PRGD Counter Mapping 1 (07H)

Bit No.	7	6	5	4	3	2	1	0
Bit Name	PRGD15	PRGD14	PRGD13	PRGD12	PRGD11	PRGD10	PRGD9	PRGD8
Type	R	R	R	R	R	R	R	R
Default	0	0	0	0	0	0	0	0

PRGD[15:8]:

These bits together with the PRGD[7:0] bits count the PRGD Bit Error numbers. The PRGD[15] bit is the MSB.

E1 LCV Counter Mapping 0 (08H)

Bit No.	7	6	5	4	3	2	1	0
Bit Name	LCV7	LCV6	LCV5	LCV4	LCV3	LCV2	LCV1	LCV0
Type	R	R	R	R	R	R	R	R
Default	0	0	0	0	0	0	0	0

LCV[7:0]:

These bits together with the LCV[15:8] bits count the Bipolar Violation (BPV) Error (in AMI decoding) or HDB3 Code Violation (CV) Error (in HDB3 decoding) numbers. The LCV[0] bit is the LSB.

E1 LCV Counter Mapping 1 (09H)

Bit No.	7	6	5	4	3	2	1	0
Bit Name	LCV15	LCV14	LCV13	LCV12	LCV11	LCV10	LCV9	LCV8
Type	R	R	R	R	R	R	R	R
Default	0	0	0	0	0	0	0	0

LCV[15:8]:

These bits together with the LCV[7:0] bits count the Bipolar Violation (BPV) Error (in AMI decoding) or HDB3 Code Violation (CV) Error (in HDB3 decoding) numbers. The LCV[15] bit is the MSB.

E1 TCRCE Counter Mapping 0 (0AH)

Bit No.	7	6	5	4	3	2	1	0
Bit Name	TCRCE7	TCRCE6	TCRCE5	TCRCE4	TCRCE3	TCRCE2	TCRCE1	TCRCE0
Type	R	R	R	R	R	R	R	R
Default	0	0	0	0	0	0	0	0

TCRCE[7:0]:

These bits together with the TCRCE[9:8] bits count the NT CRC Error numbers. The TCRCE[0] bit is the LSB.

E1 TCRCE Counter Mapping 1 (0BH)

Bit No.	7	6	5	4	3	2	1	0
Bit Name	Reserved						TCRCE9	TCRCE8
Type							R	R
Default							0	0

TCRCE[9:8]:

These bits together with the TCRCE[7:0] bits count the NT CRC Error numbers. The TCRCE[9] bit is the MSB

E1 FEBE Counter Mapping 0 (0CH)

Bit No.	7	6	5	4	3	2	1	0
Bit Name	FEBE7	FEBE6	FEBE5	FEBE4	FEBE3	FEBE2	FEBE1	FEBE0
Type	R	R	R	R	R	R	R	R
Default	0	0	0	0	0	0	0	0

FEBE[7:0]:

These bits together with the FEBE[9:8] bits count the Far End Block Error numbers. The FEBE[0] bit is the LSB.

E1 FEBE Counter Mapping 1 (0DH)

Bit No.	7	6	5	4	3	2	1	0
Bit Name	Reserved						FEBE9	FEBE8
Type							R	R
Default							0	0

FEBE[9:8]:

These bits together with the FEBE[7:0] bits count the Far End Block Error numbers. The FEBE[9] bit is the MSB

E1 TFEBE Counter Mapping 0 (0EH)

Bit No.	7	6	5	4	3	2	1	0
Bit Name	TFEBE7	TFEBE6	TFEBE5	TFEBE4	TFEBE3	TFEBE2	TFEBE1	TFEBE0
Type	R	R	R	R	R	R	R	R
Default	0	0	0	0	0	0	0	0

TFEBE[7:0]:

These bits together with the TFEBE[9:8] bits count the NT FEBE Error numbers. The TFEBE[0] bit is the LSB.

E1 TFEBE Counter Mapping 1 (0FH)

Bit No.	7	6	5	4	3	2	1	0
Bit Name	Reserved						TFEBE9	TFEBE8
Type							R	R
Default							0	0

TFEBE[9:8]:

These bits together with the TFEBE[7:0] bits count the NT FEBE Error numbers. The TFEBE[9] bit is the MSB

RCRB:

The indirect registers of RCRB addressed from 01H to 0FH & from 11H to 1FH are the Extracted Signaling Data / Extract Enable Registers for TS1 to TS15 & TS17 to TS31. Each address corresponds to one timeslot.

E1 Extracted Signaling Data/Extract Enable Register (01H ~ 0FH & 11H ~ 1FH)

Bit No.	**7**	**6**	**5**	**4**	**3**	**2**	**1**	**0**
Bit Name	Reserved			EXTRACT	A	B	C	D
Type				R/W	R	R	R	R
Default				1	0	0	0	0

EXTRACT:

This bit is valid when the Signaling Multi-Frame is synchronized.
= 0: Disable the signaling bits extraction.
= 1: The signaling bits are extracted to the A,B,C,D bits (b3~0, E1-ID-01~0FH & 11~1FH).

A, B, C, D:

These bits are valid when the EXTRACT bit is enabled.
These bits are the extracted signaling bits.

RPLC:

The indirect registers of RPLC addressed from 00H to 1FH are the Timeslot Control Registers for TS0 to TS31. Each address corresponds to one timeslot.

The indirect registers of RPLC addressed from 20H to 3FH are the Data Trunk Conditioning Code Registers for TS0 to TS31. Each address corresponds to one timeslot.

The indirect registers of RPLC addressed from 41H to 4FH and from 51H to 5FH are the Signaling Trunk Conditioning Code Registers for TS1 to TS15 and TS17 to TS31 respectively. Each address corresponds to one timeslot.

E1 Timeslot Control Register (00H ~ 1FH)

Bit No.	**7**	**6**	**5**	**4**	**3**	**2**	**1**	**0**
Bit Name	SUBST2	SUBST1	SUBST0	SINV	OINV	EINV	G56K	GAP
Type	R/W	R/W	R/W	R/W	R/W	R/W	R/W	R/W
Default	0	0	0	0	0	0	0	0

SUBST[2:0]:

When the GSUBST[2:0] bits (b2~0, E1-0D0H,...) are ‘000’, these bits select the replacement on a per-timeslot basis.

SUBST[2:0]	**Replacement Selection**
000	No operation.
001	The data of the corresponding timeslot is replaced by the data trunk code set in the DTRK[7:0] bits (b7~0, E1-ID-20~3FH).
010	The data of the corresponding timeslot is replaced by the A-Law digital milliwatt pattern.
011	The data of the corresponding timeslot is replaced by the μ-Law digital milliwatt pattern.
the others	Reserved.

SINV, OINV, EINV:

These three bits select how to invert the bits in the corresponding timeslot.

SINV	**OINV**	**EINV**	**Bit Inversion**
0	0	0	No inversion.
0	0	1	Invert the even bits (bit 2, 4, 6, 8) of the corresponding timeslot (bit 1 is the MSB).
0	1	0	Invert the odd bits (bit 3, 5, 7) except the MSB of the corresponding timeslot (bit 1 is the MSB).
0	1	1	Invert the bits from bit 2 to bit 8 of the corresponding timeslot (bit 1 is the MSB).
1	0	0	Invert the MSB (bit 1) of the corresponding timeslot.
1	0	1	Invert the MSB (bit 1) and the even bits (bit 2, 4, 6, 8) of the corresponding timeslot.
1	1	0	Invert all the odd bits (bit 1, 3, 5, 7) of the corresponding timeslot (bit 1 is the MSB).
1	1	1	Invert all the bits (bit 1 ~ bit 8) of the corresponding timeslot (bit 1 is the MSB).

G56K, GAP:

These bits are valid in Receive Clock Master mode when the PCCE bit (b0, E1-0D1H,...) is '1'.

G56K	GAP	Gap Mode
0	0	The corresponding timeslot is not gapped.
1	0	Bit 8 (LSB) of the corresponding timeslot is gapped (no clock signal during the Bit 8).
X	1	The corresponding timeslot is gapped (no clock signal during the timeslot).

E1 Data Trunk Conditioning Code Register (20H ~ 3FH)

Bit No.	7	6	5	4	3	2	1	0
Bit Name	DTRK7	DTRK6	DTRK5	DTRK4	DTRK3	DTRK2	DTRK1	DTRK0
Type	R/W	R/W	R/W	R/W	R/W	R/W	R/W	R/W
Default	0	0	0	0	0	0	0	0

DTRK[7:0]:

These bits are the data trunk codes that can replace the data of the timeslot selected by the GSUBST[2:0] bits (b2~0, E1-0D0H,...) or the SUBST[2:0] bits (b7~5, E1-ID-00~1FH).

E1 Signaling Trunk Conditioning Code Register (41H ~ 4FH & 51H ~ 5FH)

Bit No.	7	6	5	4	3	2	1	0
Bit Name	Reserved	TEST	Reserved	STRKEN	A	B	C	D
Type		R/W		R/W	R/W	R/W	R/W	R/W
Default		0		0	0	0	0	0

TEST:

This bit is valid in 8-bit-based mode or in 7-bit-based mode selected by the PRBSMODE[1:0] bits (b3~2, E1-0C7H,...).

= 0: Disable the data in the corresponding timeslot to be tested by the PRBS Generator/Detector.

= 1: Enable the data in the corresponding timeslot to be extracted to the PRBS Generator/Detector for test (when the PRBSDIR bit (b1, E1-0C7H,...) is ‘0’); or enable the test pattern from the PRBS Generator/Detector to replace the data in the corresponding timeslot for test (when the PRBSDIR bit (b1, E1-0C7H,...) is ‘1’). In 8-bit-based mode, the data refers to all 8 bits. In 7-bit-based mode, the data refers to the 7 MSB.

All the timeslots that are extracted to the PRBS Generator/Detector are concatenated and treated as a continuous stream in which pseudo random are searched for. Similarly, all the timeslots set to be replaced with the PRBS Generator/Detector test pattern data are concatenated replaced by the PRBS.

STRKEN:

= 0: No operation.

= 1: The data of the corresponding timeslot is replaced by the signaling trunk code set in the A, B, C, D bits (b3~0, E1-ID-41~4FH & 51~5FH).

A, B, C, D:

These bits are the signaling trunk codes that can replace the signaling bits of the timeslot selected by the GSTRKEN bit (b6, E1-0D0H,...) or the STRKEN bit (b4, E1-ID-41~4FH & 51~5FH).

TPLC:

The indirect registers of TPLC addressed from 00H to 1FH are the Timeslot Control Registers for TS0 to TS31. Each address corresponds to one timeslot.

The indirect registers of TPLC addressed from 20H to 3FH are the Data Trunk Conditioning Code Registers for TS0 to TS31. Each address corresponds to one timeslot.

The indirect registers of TPLC addressed from 41H to 4FH and from 51H to 5FH are the Signaling Trunk Conditioning Code Registers for TS1 to TS15 and TS17 to TS31 respectively. Each address corresponds to one timeslot.

E1 Timeslot Control Register (00H ~ 1FH)

Bit No.	7	6	5	4	3	2	1	0
Bit Name	SUBST2	SUBST1	SUBST0	SINV	OINV	EINV	G56K	GAP
Type	R/W	R/W	R/W	R/W	R/W	R/W	R/W	R/W
Default	0	0	0	0	0	0	0	0

SUBST[2:0]:

When the GSUBST[2:0] bits(b2~0, E1-0CBH,...) are ‘000’, these bits select the replacement on a per-channel basis.

SUBST[2:0]	Replacement Selection
0 0 0	No operation.
0 0 1	The data of the corresponding timeslot is replaced by the data trunk code set in the DTRK[7:0] bits (b7~0, T1/J1-ID-21~38H).
0 1 0	The data of the corresponding timeslot is replaced by the A-Law digital milliwatt pattern.
0 1 1	The data of the corresponding timeslot is replaced by the μ-Law digital milliwatt pattern.
1 0 0	The data of the corresponding timeslot is replaced by the payload loopback code extracted from the Elastic Store Buffer in the receive path.
others	Reserved.

SINV, OINV, EINV:

These three bits select how to invert the bits in the corresponding channel.

SINV	OINV	EINV	Bit Inversion
0	0	0	No inversion.
0	0	1	Invert the even bits (bit 2, 4, 6, 8) of the corresponding channel (bit 1 is the MSB).
0	1	0	Invert the odd bits (bit 3, 5, 7) except the MSB of the corresponding channel (bit 1 is the MSB).
0	1	1	Invert the bits from bit 2 to bit 8 of the corresponding channel (bit 1 is the MSB).
1	0	0	Invert the MSB (bit 1) of the corresponding channel.
1	0	1	Invert the MSB (bit 1) and the even bits (bit 2, 4, 6, 8) of the corresponding channel.
1	1	0	Invert all the odd bits (bit 1, 3, 5, 7) of the corresponding channel (bit 1 is the MSB).
1	1	1	Invert all the bits (bit 1 ~ bit 8) of the corresponding channel (bit 1 is the MSB).

G56K, GAP:

These bits are valid in Transmit Clock Master mode when the PCCE bit (b0, E1-0CCH,...) is '1'.

G56K	GAP	Gap Mode
0	0	The corresponding timeslot is not gapped.
1	0	Bit 8 (LSB) of the corresponding timeslot is gapped (no clock signal during the Bit 8).
X	1	The corresponding timeslot is gapped (no clock signal during the timeslot).

E1 Data Trunk Conditioning Code Register (20H ~ 3FH)

Bit No.	7	6	5	4	3	2	1	0
Bit Name	DTRK7	DTRK6	DTRK5	DTRK4	DTRK3	DTRK2	DTRK1	DTRK0
Type	R/W	R/W	R/W	R/W	R/W	R/W	R/W	R/W
Default	0	0	0	0	0	0	0	0

DTRK[7:0]:

These bits are the data trunk codes that can replace the data of the channel selected by the GSUBST[2:0] bits (b2~0, T1/J1-0CBH,...) or the SUBST[2:0] bits (b7~5, T1/J1-ID-01~18H).

E1 Signaling Trunk Conditioning Code Register (41H ~ 4FH & 51H ~ 5FH)

Bit No.	7	6	5	4	3	2	1	0
Bit Name	Reserved	TEST	Reserved	STRKEN	A	B	C	D
Type		R/W		R/W	R/W	R/W	R/W	R/W
Default		0		0	0	0	0	0

TEST:

This bit is valid in 8-bit-based mode or in 7-bit-based mode selected by the PRBSMODE[1:0] bits (b3~2, T1/J1-0C7H,...).

= 0: Disable the data in the corresponding channel to be tested by the PRBS Generator/Detector.

= 1: Enable the data in the corresponding channel to be extracted to the PRBS Generator/Detector for test (when the PRBSDIR bit (b1, E1-0C7H,...) is ‘0’); or enable the test pattern from the PRBS Generator/Detector to replace the data in the corresponding channel for test (when the PRBSDIR bit (b1, E1-0C7H,...) is ‘1’). In 8-bit-based mode, the data refers to all 8 bits. In 7-bit-based mode, the data refers to the 7 MSB.

All the channels that are extracted to the PRBS Generator/Detector are concatenated and treated as a continuous stream in which pseudo random are searched for. Similarly, all the channels set to be replaced with the PRBS Generator/Detector test pattern data are concatenated replaced by the PRBS.

STRKEN:

= 0: No operation.

= 1: The data of the corresponding channel is replaced by the signaling trunk code set in the A, B, C, D bits (b3~0, T1/J1-ID-41~58H).

A, B, C, D:

These bits are the signaling trunk codes that can replace the signaling bits of the channel selected by the GSTRKEN bit (b6, T1/J1-0CBH,...) or the STRKEN bit (b4, T1/J1-ID-41~58H).

6 IEEE STD 1149.1 JTAG TEST ACCESS PORT

The IDT82P2284 supports the digital Boundary Scan Specification as described in the IEEE 1149.1 standards.

The boundary scan architecture consists of data and instruction registers plus a Test Access Port (TAP) controller. Control of the TAP is achieved through signals applied to the Test Mode Select (TMS) and Test Clock (TCK) input pins. Data is shifted into the registers via the Test Data Input (TDI) pin, and shifted out of the registers via the Test Data Output (TDO) pin. Both TDI and TDO are clocked at a rate determined by TCK.

The JTAG boundary scan registers include BSR (Boundary Scan Register), DIR (Device Identification Register), BR (Bypass Register) and IR (Instruction Register). These will be described in the following pages. Refer to Figure - 40 for architecture.

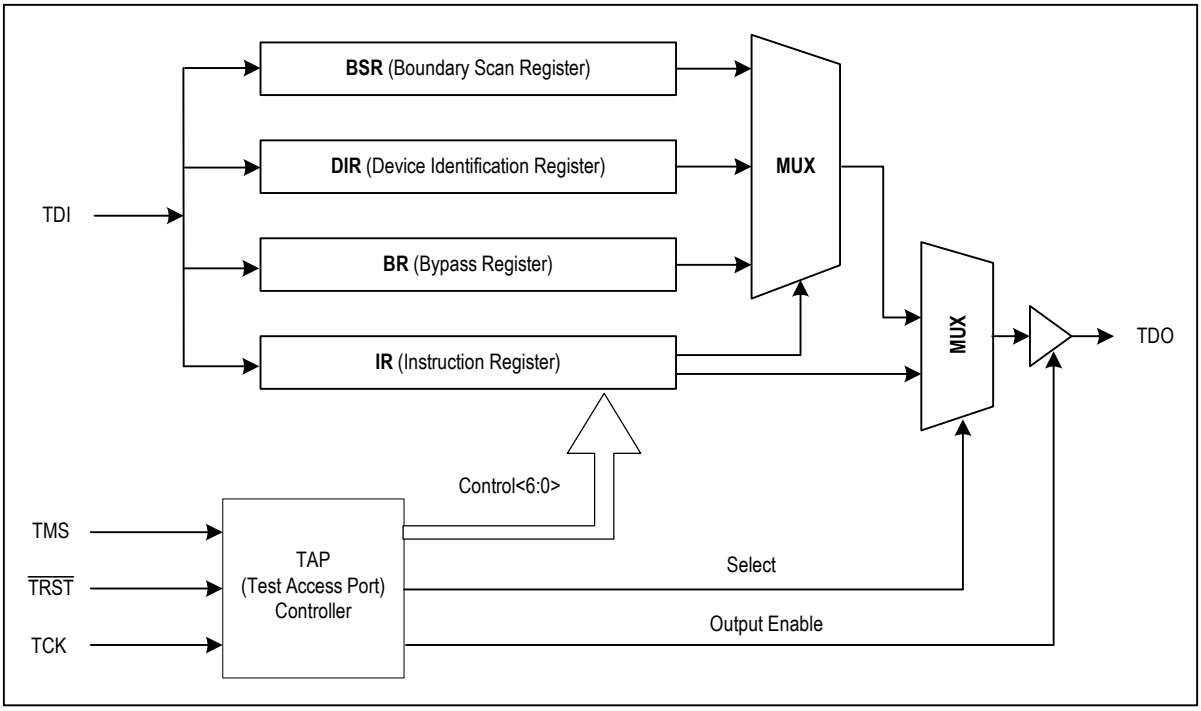

Figure 40. JTAG Architecture

6.1 JTAG INSTRUCTIONS AND INSTRUCTION REGISTER (IR)

The IR (Instruction Register) with instruction decode block is used to select the test to be executed or the data register to be accessed or both.

The instructions are shifted in LSB first to this 3-bit register. See Table 82 for details of the codes and the instructions related.

Table 82: IR Code

IR Code	Instruction	Comment
0 0 0	EXTEST	The external test instruction allows testing of the interconnection to other devices. When the current instruction is the EXTEST instruction, the boundary scan register is placed between TDI and TDO. The signal on the input pins can be sampled by loading the boundary scan register using the Capture-DR state. The sampled values can then be viewed by shifting the boundary scan register using the Shift-DR state. The signal on the output pins can be controlled by loading patterns shifted in through input TDI into the boundary scan register using the Update-DR state.
0 1 0	SAMPLE / PRELOAD	The sample/preload instruction is used to allow scanning of the boundary-scan register without causing interference to the normal operation of the on-chip system logic. Data received at system input pins is supplied without modification to the on-chip system logic; data from the on-chip system logic is driven without modification through the system output pins. SAMPLE allows a snapshot to be taken of the data flowing from the system pins to the on-chip system logic or vice versa, without interfering with the normal operation of the assembled board. PRELOAD allows an initial data pattern to be placed at the latched parallel outputs of boundary-scan register cells prior to selection of another boundary-scan test operation.
0 0 1	IDCODE	The identification instruction is used to connect the identification register between TDI and TDO. The device's identification code can then be shifted out using the Shift-DR state.
1 1 1	BYPASS	The BYPASS instruction shifts data from input TDI to output TDO with one TCK clock period delay. The instruction is used to bypass the device.
0 1 1	CLAMP	This instruction allows the state of the signals driven from device pins to be determined from the boundary-scan register while the bypass register is selected as the serial path between TDI and TDO. The signals driven from the device pins will not change while the CLAMP instruction is selected.
0 1 0	HIGHZ	Use of the HIGHZ instruction places the device in a state in which all of its system logic outputs are placed in an inactive drive state (e.g., high impedance). In this state, and in-circuit test system may drive signals onto the connections normally driven by a device output without incurring the risk of damage to the device.
1 0 1	-	(for IC manufactory test)

6.2 JTAG DATA REGISTER

6.2.1 DEVICE IDENTIFICATION REGISTER (IDR)

The IDR can be set to define the Vision, the Part Number, the Manufacturer Identity and a fixed bit. The IDR is 32 bits long and is partitioned as in Table 83. Data from the IDR is shifted out to the TDO LSB first.

Table 83: IDR

Bit No.	Comments
0	Set to '1'
1 ~ 11	Manufacturer Identity (033H)
12 ~ 27	Part Number (04D8H)
28 ~ 31	Version Number

6.2.2 BYPASS REGISTER (BYP)

The BYR consists of a single bit. It can provide a serial path between the TDI input and TDO output, bypassing the BYR to reduce test access times.

6.2.3 BOUNDARY SCAN REGISTER (BSR)

The bidirectional ports interface to 2 boundary scan cells:
- In cell: The Input cell is observable only (BC_4).
- Out cell: The output cell is controllable and observable (BC_1).

The Boundary Scan (BS) sequence is illustrated in Table 84.

Table 84: Boundary Scan (BS) Sequence

BS-Cell Name	BS No.	BS-Cell Type
THZ	173	IN-CELL
CLE_GEN_2.048	172	OUT-CELL
CLE_GEN_1.544	171	OUT-CELL
REFB_OUT	170	OUT-CELL
REFA_OUT	169	OUT-CELL
IC	168	IN-CELL
IC	167	IN-CELL
CLK_SEL[0]	166	IN-CELL
CLK_SEL[1]	165	IN-CELL
CLK_SEL[2]	164	IN-CELL
GPIO[0]_OUT	163	OUT-CELL
GPIO[0]_IN	162	IN-CELL
GPIO[0]_OE	161	OUT-CELL
GPIO[1]_OUT	160	OUT-CELL
GPIO[1]_IN	159	IN-CELL
GPIO[1]_OE	158	OUT-CELL
$\overline{\text{RESET}}$	157	IN-CELL
OSCI	156	IN-CELL
(Internal)	155	IN-CELL
(Internal)	154	IN-CELL
(Internal)	153	IN-CELL
(Internal)	152	IN-CELL
(Internal)	151	IN-CELL
(Internal)	150	IN-CELL
(Internal)	149	IN-CELL
(Internal)	148	IN-CELL
TSIG[4]	147	IN-CELL
TSD[4]	146	IN-CELL
TSIG[3]	145	IN-CELL
TSD[3]	144	IN-CELL
TSIG[2]	143	IN-CELL
TSD[2]	142	IN-CELL
TSIG[1]	141	IN-CELL
TSD[1]	140	IN-CELL
(Internal)	139	OUT-CELL
(Internal)	138	IN-CELL
(Internal)	137	OUT-CELL
(Internal)	136	IN-CELL
(Internal)	135	OUT-CELL
(Internal)	134	OUT-CELL
(Internal)	133	IN-CELL

Table 84: Boundary Scan (BS) Sequence (Continued)

BS-Cell Name	BS No.	BS-Cell Type
(Internal)	132	OUT-CELL
(Internal)	131	IN-CELL
(Internal)	130	OUT-CELL
(Internal)	129	OUT-CELL
(Internal)	128	IN-CELL
(Internal)	127	OUT-CELL
(Internal)	126	IN-CELL
(Internal)	125	OUT-CELL
(Internal)	124	OUT-CELL
(Internal)	123	IN-CELL
(Internal)	122	OUT-CELL
(Internal)	121	IN-CELL
(Internal)	120	OUT-CELL
TSFS4_OUT	119	OUT-CELL
TSFS4_IN	118	IN-CELL
TSCK4_OUT	117	OUT-CELL
TSCK4_IN	116	IN-CELL
TSCK_FS4_OE	115	OUT-CELL
TSFS3_OUT	114	OUT-CELL
TSFS3_IN	113	IN-CELL
TSCK3_OUT	112	OUT-CELL
TSCK3_IN	111	IN-CELL
TSCK_FS3_OE	110	OUT-CELL
TSFS2_OUT	109	OUT-CELL
TSFS2_IN	108	IN-CELL
TSCK2_OUT	107	OUT-CELL
TSCK2_IN	106	IN-CELL
TSCK_FS2_OE	105	OUT-CELL
TSFS1_OUT	104	OUT-CELL
TSFS1_IN	103	IN-CELL
TSCK1_OUT	102	OUT-CELL
TSCK1_IN	101	IN-CELL
TSCK_FS1_OE	100	OUT-CELL
(Internal)	99	OUT-CELL
(Internal)	98	OUT-CELL
(Internal)	97	OUT-CELL
(Internal)	96	OUT-CELL
(Internal)	95	OUT-CELL
(Internal)	94	OUT-CELL
(Internal)	93	OUT-CELL
(Internal)	92	OUT-CELL
(Internal)	91	OUT-CELL
(Internal)	90	OUT-CELL
(Internal)	89	OUT-CELL
(Internal)	88	OUT-CELL
RSIG[4]	87	OUT-CELL
RSD[4]	86	OUT-CELL

Table 84: Boundary Scan (BS) Sequence (Continued)

BS-Cell Name	BS No.	BS-Cell Type
RSD_RSIG4_EN	85	OUT-CELL
RSIG[3]	84	OUT-CELL
RSD[3]	83	OUT-CELL
RSD_RSIG3_EN	82	OUT-CELL
RSIG[2]	81	OUT-CELL
RSD[2]	80	OUT-CELL
RSD_RSIG2_EN	79	OUT-CELL
RSIG[1]	78	OUT-CELL
RSD[1]	77	OUT-CELL
RSD_RSIG1_EN	76	OUT-CELL
(Internal)	75	OUT-CELL
(Internal)	74	IN-CELL
(Internal)	73	OUT-CELL
(Internal)	72	IN-CELL
(Internal)	71	OUT-CELL
(Internal)	70	OUT-CELL
(Internal)	69	IN-CELL
(Internal)	68	OUT-CELL
(Internal)	67	IN-CELL
(Internal)	66	OUT-CELL
(Internal)	65	OUT-CELL
(Internal)	64	IN-CELL
(Internal)	63	OUT-CELL
(Internal)	62	IN-CELL
(Internal)	61	OUT-CELL
(Internal)	60	OUT-CELL
(Internal)	59	IN-CELL
(Internal)	58	OUT-CELL
(Internal)	57	IN-CELL
(Internal)	56	OUT-CELL
RSFS4_OUT	55	OUT-CELL
RSFS4_IN	54	IN-CELL
RSCK4_OUT	53	OUT-CELL
RSCK4_IN	52	IN-CELL
RSCK_FS4_EN	51	OUT-CELL
RSFS3_OUT	50	OUT-CELL
RSFS3_IN	49	IN-CELL
RSCK3_OUT	48	OUT-CELL
RSCK3_IN	47	IN-CELL
RSCK_FS3_EN	46	OUT-CELL
RSFS2_OUT	45	OUT-CELL
RSFS2_IN	44	IN-CELL
RSCK2_OUT	43	OUT-CELL
RSCK2_IN	42	IN-CELL
RSCK_FS2_EN	41	OUT-CELL
RSFS1_OUT	40	OUT-CELL
RSFS1_IN	39	IN-CELL

Table 84: Boundary Scan (BS) Sequence (Continued)

BS-Cell Name	BS No.	BS-Cell Type
RSCK1_OUT	38	OUT-CELL
RSCK1_IN	37	IN-CELL
RSCK_FS1_EN	36	OUT-CELL
INT_OUT	35	OUT-CELL
INT_OE	34	OUT-CELL
SPIEN	33	IN-CELL
MPM	32	IN-CELL
DS/RD/SCLK	31	IN-CELL
$\overline{WR}$/$\overline{RW}$/SDI	30	IN-CELL
CS	29	IN-CELL
D0_OUT	28	OUT-CELL
D0_IN	27	IN-CELL
D1_OUT	26	OUT-CELL
D1_IN	25	IN-CELL
D2_OUT	24	OUT-CELL
D2_IN	23	IN-CELL
D3_OUT	22	OUT-CELL
D3_IN	21	IN-CELL
D4_OUT	20	OUT-CELL
D4_IN	19	IN-CELL
D5_OUT	18	OUT-CELL
D5_IN	17	IN-CELL
D6_OUT	16	OUT-CELL
D6_IN	15	IN-CELL
D7_OUT	14	OUT-CELL
D7_IN	13	IN-CELL
D_OEN	12	OUT-CELL
A[0]	11	IN-CELL
A[1]	10	IN-CELL
A[2]	9	IN-CELL
A[3]	8	IN-CELL
A[4]	7	IN-CELL
A[5]	6	IN-CELL
A[6]	5	IN-CELL
A[7]	4	IN-CELL
A[8]	3	IN-CELL
A[9]	2	IN-CELL
(Internal)	1	IN-CELL

6.3 TEST ACCESS PORT CONTROLLER

The TAP controller is a 16-state synchronous state machine. Figure - 41 shows its state diagram. A description of each state is listed in Table 85. Note that the figure contains two main branches to access either the data or instruction registers. The value shown next to each state transition in this figure states the value present at TMS at each rising edge of TCK.

Table 85: TAP Controller State Description

State	Description
Test Logic Reset	In this state, the test logic is disabled to continue normal operation of the device. During initialization, the device initializes the instruction register with the IDCODE instruction. Regardless of the original state of the controller, the controller enters the Test-Logic-Reset state when the TMS input is held high for at least 5 rising edges of TCK. The controller remains in this state while TMS is high.
Run-Test/ Idle	This is a controller state between scan operations. Once in this state, the controller remains in the state as long as TMS is held low. The instruction register and all test data registers retain their previous state. When TMS is high and a rising edge is applied to TCK, the controller moves to the Select-DR state.
Select-DR-Scan	This is a temporary controller state and the instruction does not change in this state. The test data register selected by the current instruction retains its previous state. If TMS is held low and a rising edge is applied to TCK when in this state, the controller moves into the Capture-DR state and a scan sequence for the selected test data register is initiated. If TMS is held high and a rising edge applied to TCK, the controller moves to the Select-IR-Scan state.
Capture-DR	In this state, the Boundary Scan Register captures input pin data if the current instruction is EXTEST or SAMPLE/PRELOAD. The instruction does not change in this state. The other test data registers, which do not have parallel input, are not changed. When the TAP controller is in this state and a rising edge is applied to TCK, the controller enters the Exit1-DR state if TMS is high or the Shift-DR state if TMS is low.
Shift-DR	In this controller state, the test data register connected between TDI and TDO as a result of the current instruction shifts data on stage toward its serial output on each rising edge of TCK. The instruction does not change in this state. When the TAP controller is in this state and a rising edge is applied to TCK, the controller enters the Exit1-DR state if TMS is high or remains in the Shift-DR state if TMS is low.
Exit1-DR	This is a temporary state. While in this state, if TMS is held high, a rising edge applied to TCK causes the controller to enter the Update-DR state, which terminates the scanning process. If TMS is held low and a rising edge is applied to TCK, the controller enters the Pause-DR state. The test data register selected by the current instruction retains its previous value and the instruction does not change during this state.
Pause-DR	The pause state allows the test controller to temporarily halt the shifting of data through the test data register in the serial path between TDI and TDO. For example, this state could be used to allow the tester to reload its pin memory from disk during application of a long test sequence. The test data register selected by the current instruction retains its previous value and the instruction does not change during this state. The controller remains in this state as long as TMS is low. When TMS goes high and a rising edge is applied to TCK, the controller moves to the Exit2-DR state.
Exit2-DR	This is a temporary state. While in this state, if TMS is held high, a rising edge applied to TCK causes the controller to enter the Update-DR state, which terminates the scanning process. If TMS is held low and a rising edge is applied to TCK, the controller enters the Shift-DR state. The test data register selected by the current instruction retains its previous value and the instruction does not change during this state.
Update-DR	The Boundary Scan Register is provided with a latched parallel output to prevent changes while data is shifted in response to the EXTEST and SAMPLE/PRELOAD instructions. When the TAP controller is in this state and the Boundary Scan Register is selected, data is latched into the parallel output of this register from the shift-register path on the falling edge of TCK. The data held at the latched parallel output changes only in this state. All shift-register stages in the test data register selected by the current instruction retain their previous value and the instruction does not change during this state.
Select-IR-Scan	This is a temporary controller state. The test data register selected by the current instruction retains its previous state. If TMS is held low and a rising edge is applied to TCK when in this state, the controller moves into the Capture-IR state, and a scan sequence for the instruction register is initiated. If TMS is held high and a rising edge is applied to TCK, the controller moves to the Test-Logic-Reset state. The instruction does not change during this state.
Capture-IR	In this controller state, the shift register contained in the instruction register loads a fixed value of '100' on the rising edge of TCK. This supports fault-isolation of the board-level serial test data path. Data registers selected by the current instruction retain their value and the instruction does not change during this state. When the controller is in this state and a rising edge is applied to TCK, the controller enters the Exit1-IR state if TMS is held high, or the Shift-IR state if TMS is held low.
Shift-IR	In this state, the shift register contained in the instruction register is connected between TDI and TDO and shifts data one stage towards its serial output on each rising edge of TCK. The test data register selected by the current instruction retains its previous value and the instruction does not change during this state. When the controller is in this state and a rising edge is applied to TCK, the controller enters the Exit1-IR state if TMS is held high, or remains in the Shift-IR state if TMS is held low.
Exit1-IR	This is a temporary state. While in this state, if TMS is held high, a rising edge applied to TCK causes the controller to enter the Update-IR state, which terminates the scanning process. If TMS is held low and a rising edge is applied to TCK, the controller enters the Pause-IR state. The test data register selected by the current instruction retains its previous value and the instruction does not change during this state.

Table 85: TAP Controller State Description (Continued)

State	Description
Pause-IR	The pause state allows the test controller to temporarily halt the shifting of data through the instruction register. The test data register selected by the current instruction retains its previous value and the instruction does not change during this state. The controller remains in this state as long as TMS is low. When TMS goes high and a rising edge is applied to TCK, the controller moves to the Exit2-IR state.
Exit2-IR	This is a temporary state. While in this state, if TMS is held high, a rising edge applied to TCK causes the controller to enter the Update-IR state, which terminates the scanning process. If TMS is held low and a rising edge is applied to TCK, the controller enters the Shift-IR state. The test data register selected by the current instruction retains its previous value and the instruction does not change during this state.
Update-IR	The instruction shifted into the instruction register is latched into the parallel output from the shift-register path on the falling edge of TCK. When the new instruction has been latched, it becomes the current instruction. The test data registers selected by the current instruction retain their previous value.

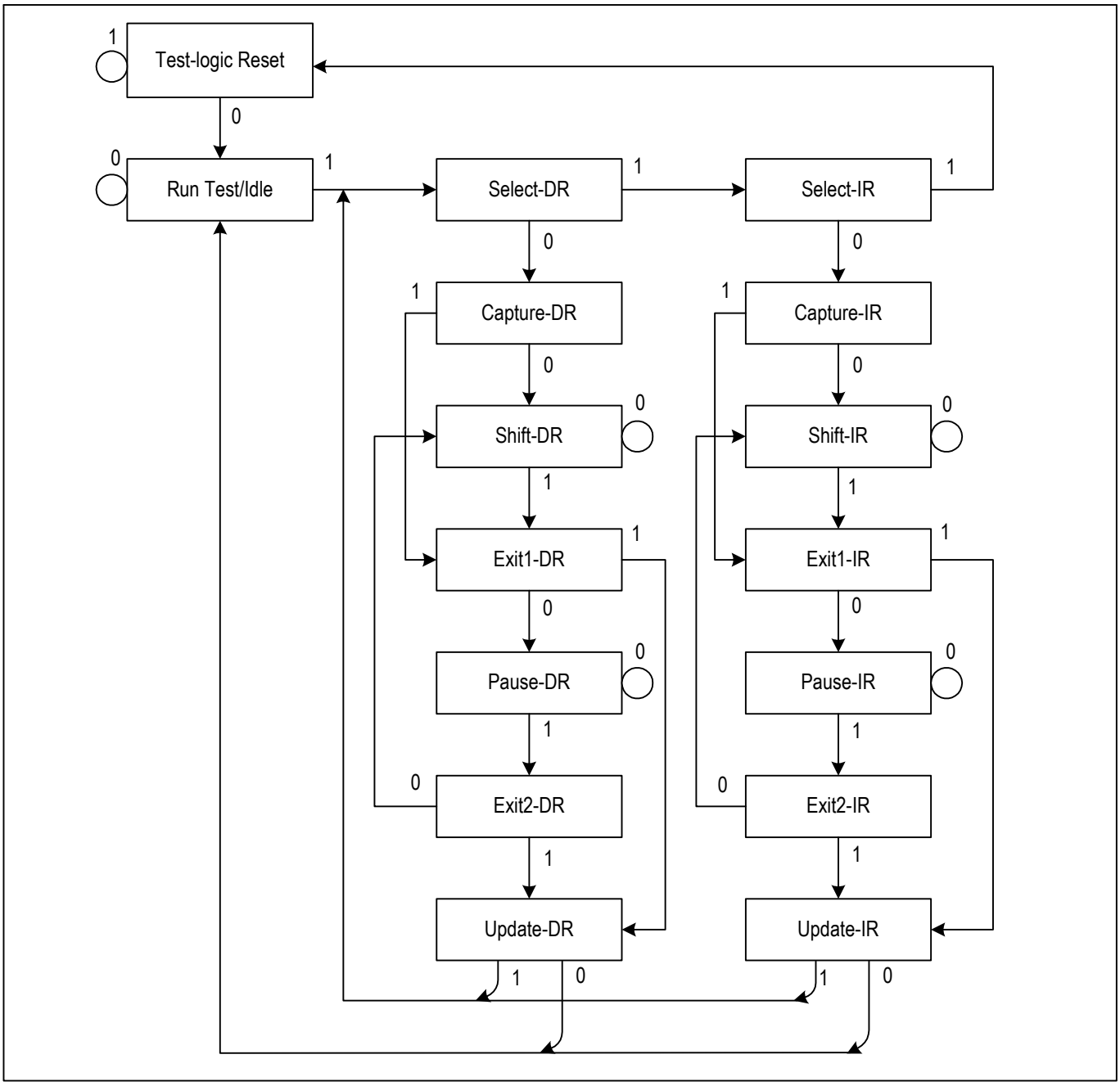

Figure 41. JTAG State Diagram

7 PHYSICAL AND ELECTRICAL SPECIFICATIONS

7.1 ABSOLUTE MAXIMUM RATINGS

	Min	Max	
Storage Temperature	-65 °C	+150 °C	
Voltage on VDDAR/VDDAT/VDDAX/VDDAB/VDDAP w.r.t. GND	-0.5 V	4.6 V	
Voltage on VDDDIO w.r.t. GND	-0.5 V	4.6 V	
Voltage on VDDDC w.r.t. GND	-0.5 V	2.2 V	
Voltage on Any Input Digital Pin	-0.5 V	6 V	
Voltage on Any Input Analog Pin	-0.5 V	VDDAR/VDDAT/VDDAX/ VDDAB/VDDAP + 0.5	
ESD Performance (HBM)	2000 V		
Latch-up Current on Any Pin	1.5 x Inormal *		
Maximum Junction Temperature	150		
Maximum Allowed Power Dissipation (Package)		2.63W	
Note: * Inormal is the total current in normal operation mode.			

Caution: Long-term exposure to absolute maximum ratings may affect the device's reliability, and permanent damage may occur if the rating is exceeded during operation. Functional operation under these conditions is not implied. The device should be operated under recommended operating conditions.

7.2 RECOMMENDED OPERATING CONDITIONS

Parameter	Description	Min.	Typ.	Max	Unit
Top	Operating Temperature Range	-40	25	85	°C
VDDDIO	Digital IO Power Supply	3.0	3.3	3.6	V
VDDAR/VDDAT/VDDAX/VDDAB/VDDAP	Analog IO Power Supply	3.13	3.3	3.47	V
VDDDC	Digital Core Power	1.68	1.8	1.98	V
VIL	Input Low Voltage	0		0.8	V
VIH	Input High Voltage	2.0		3.3	V

7.3 D.C. CHARACTERISTICS

@ TA = -40 to +85 °C, VDDDIO = 3.3 V ± 0.3 V, VDDDC = 1.8 ± 10%

Parameter	Description	Min.	Typ.	Max	Unit	Test Conditions
VOL	Output Low Voltage			0.40	V	VDDDIO = min, IOL = 4 mA, 8 mA
VOH	Output High Voltage	2.4			V	VDDDIO = min, IOH = 4 mA, 8 mA
VT+	Schmitt Trigger Input Low to High Threshold Point for IOs with Schmitt Trigger	1.35			V	
VT-	Schmitt Trigger Input High to Low Threshold Point for IOs with Schmitt Trigger			1.02	V	
R_{PU}	Pullup Resistor in Pull-up IOs	50	70	115	KΩ	
IIL	Input Low Current	-1	0	+1	µA	VIL = GNDD
IIH	Input High Current	-1	0	+1	µA	VIH = VDDDIO
IOL_D	Output Low Current	8			mA	VO = VOL, D7 - D0
IOH_D	Output High Current	8			mA	VO = VOH, D7 - D0
IOL	Output Low Current	4			mA	VO = VOL, except D7 - D0
IOH	Output High Current	4			mA	VO = VOH, except D7 - D0
C_{IN}	Input Digital Pin Capacitance			10	pF	
I_{ZL}	Leakage Current of Digital Output in High-Impedance Mode	-10		10	µA	GND < VO < VDDDIO
P	Power Dissipation		450		mW	with the PRBS pattern, excluding Loading Dissipation
P33	Power Dissipation in 3.3 V Domain		350		mW	
P18	Power Dissipation in 1.8 V Domain		100		mW	

7.4 DIGITAL I/O TIMING CHARACTERISTICS

The capacitive loading for timing measurement is:
100 pF for BUS: D[7:0],
50 pF for other pins.
The timing can be applied to both clock edges as defined by active clock edge selection.
Delays are measured according to the cross of 50% of the rising/falling edge.
The duty cycle for TSCKn/MTSCK & RSCKn/MRSCK is from 40% to 60%.

The system Input / Output timing in is listed as below:

Symbol	Parameter	Min.	Typ.	Max	Unit
Tprop	Propagation Delay	-10 / 0 *		20	ns
Ts	Set Up Time	10			ns
Thold	Hold Time	10			ns

Note:
* The '-10' applies to the case that the clock is input and the '0' applies to the case that the clock is output.

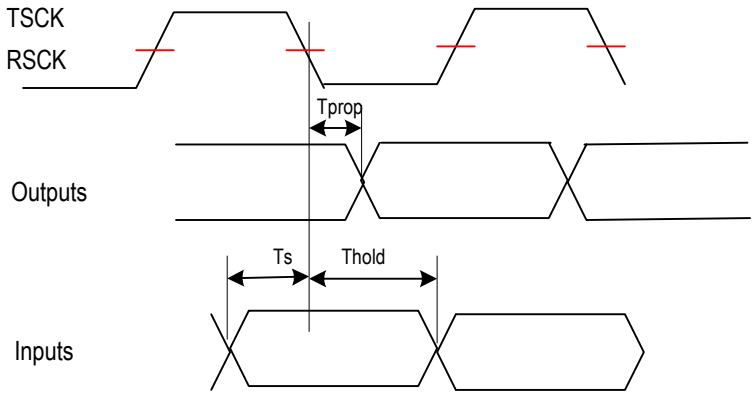

Figure 42. I/O Timing in Mode

7.5 CLOCK FREQUENCY REQUIREMENT

- Relative to nominal rate

	Min	Max	Unit
TSCK	-100	+100	ppm
RSCK	-100	+100	ppm
OSCI	-32	+32	ppm

7.6 T1/J1 LINE RECEIVER ELECTRICAL CHARACTERISTICS

Parameter	Min.	Typ.	Max	Unit	Test Conditions
Receiver Sensitivity Short haul with cable loss @ 772 kHz: Long haul with cable loss @ 772 kHz:			 10 36	 dB	 with nominal pulse amplitude of 3.0 V for 100 Ω termination
Analog LOS level Short haul: Long haul:	 4	 800 	 48	 mVp-p dB	 A LOS level is programmable for long haul.
Allowable consecutive zeros before LOS T1.231 - 1993: I.431:		 175 1544			
LOS reset	12.5			% ‘One’s	G.775, ETSI 300233
Receive Intrinsic Jitter 10 Hz - 8 KHz 10 Hz - 40 KHz 8 KHz - 40 KHz Wide Band			 0.02 0.025 0.025 0.05	 U.I. U.I. U.I. U.I.	JA is enabled
Input Jitter Tolerance 0.1 Hz - 1 Hz: 4.9 Hz - 300 Hz: 10 KHz - 100 KHz:	 138.0 28.0 0.4			 U.I. U.I. U.I.	AT&T62411
Receiver Differential Input Impedance	20			KΩ	
Input Termination Resistor Tolerance			±1%		
Receive Return Loss 39 KHz - 77 KHz: 77 KHz - 1.544 MHz: 1.544 MHz - 2.316 MHz	 20 20 20			 dB dB dB	 G.703 Internal Termination

7.7 E1 LINE RECEIVER ELECTRICAL CHARACTERISTICS

Parameter	Min.	Typ.	Max	Unit	Test Conditions
Receiver Sensitivity Short haul with cable loss @ 1024 kHz: Long haul with cable loss @ 1024 kHz:			 10 43	dB	with nominal pulse amplitude of 3.0 V for 120 Ω and 2.37 V for 75 Ω termination
Analog LOS level Short haul: Long haul:	 4	 800 	 48	 mVp-p dB	A LOS level is programmable for long haul.
Allowable consecutive zeros before LOS G.775: I.431 / ETSI300233:		 32 2048			
LOS reset	12.5			% ‘One’s	G.775, ETSI 300233
Receive Intrinsic Jitter			0.05	U.I.	JA is enabled; wide band
Input Jitter Tolerance 1 Hz - 20 Hz: 20 Hz - 2.4 KHz: 18 KHz - 100 KHz:	 37 5 2			 U.I. U.I. U.I.	G.823, with 6 dB cable attenuation
Receiver Differential Input Impedance	20			KΩ	
Input Termination Resistor Tolerance			±1%		
Receive Return Loss 51 KHz - 102 KHz: 102 KHz - 2.048 MHz: 2.048 MHz - 3.072 MHz	 20 20 20			 dB dB dB	 G.703 Internal Termination

7.8 T1/J1 LINE TRANSMITTER ELECTRICAL CHARACTERISTICS

Parameter	Min.	Typ.	Max	Unit
Output pulse amplitudes	2.4	3.0	3.6	V
Zero (space) level	-0.15		0.15	V
Transmit amplitude variation with supply	-1		+1	%
Difference between pulse sequences for 17 consecutive pulses (T1.102)			200	mV
Output pulse width at 50% of nominal amplitude	338	350	362	ns
Pulse width variation at the half amplitude (T1.102)			20	ns
Imbalance between Positive and Negative Pulses amplitude (T1.102)	0.95		1.05	
Transmit Return Loss 39 KHz - 77 KHz: 77 KHz - 1.544 MHz: 1.544 MHz - 2.316 MHz:		 20 15 12		 dB dB dB
Intrinsic Transmit Jitter (TSCK is jitter free) 10 Hz - 8 KHz: 8 KHz - 40 KHz: 10 Hz - 40 KHz: wide band:			 0.020 0.025 0.025 0.050	 U.I.p-p U.I.p-p U.I.p-p U.I.p-p
Line short circuit current		110		mA Ip-p

7.9 E1 LINE TRANSMITTER ELECTRICAL CHARACTERISTICS

Parameter	Min.	Typ.	Max	Unit
Output pulse amplitudes E1, 75Ω load: E1, 120Ω load:	 2.14 2.7	 2.37 3.0	 2.60 3.3	 V V
Zero (space) level E1, 75Ω load: E1, 120Ω load:	 -0.237 -0.3		 0.237 0.3	 V V
Transmit amplitude variation with supply	-1		+1	%
Difference between pulse sequences for 17 consecutive pulses (T1.102)			200	mV
Output pulse width at 50% of nominal amplitude	232	244	256	ns
Ratio of the amplitudes of Positive and Negative pulses at the center of the pulse interval (G.703)	0.95		1.05	
Ratio of the width of Positive and Negative pulses at the center of the pulse interval (G.703)	0.95		1.05	
Transmit Return Loss (G.703) E1, 75 Ω / 120 Ω 51 KHz - 102 KHz: 102 KHz - 2.048 MHz: 2.048 MHz - 3.072 MHz:		 20 15 12		 dB dB dB
Intrinsic Transmit Jitter (TSCK is jitter free) 20 Hz - 100 KHz			 0.050	 U.I.
Line short circuit current		110		mA Ip-p

7.10 JITTER TOLERANCE

7.10.1 T1/J1 MODE

Jitter Tolerance	Min.	Typ.	Max	Unit	Standard
1 Hz	138.0			U.I.	AT&T 62411
4.9 Hz - 300 Hz	28.0			U.I.	
10 KHz - 100 KHz	0.4			U.I.	

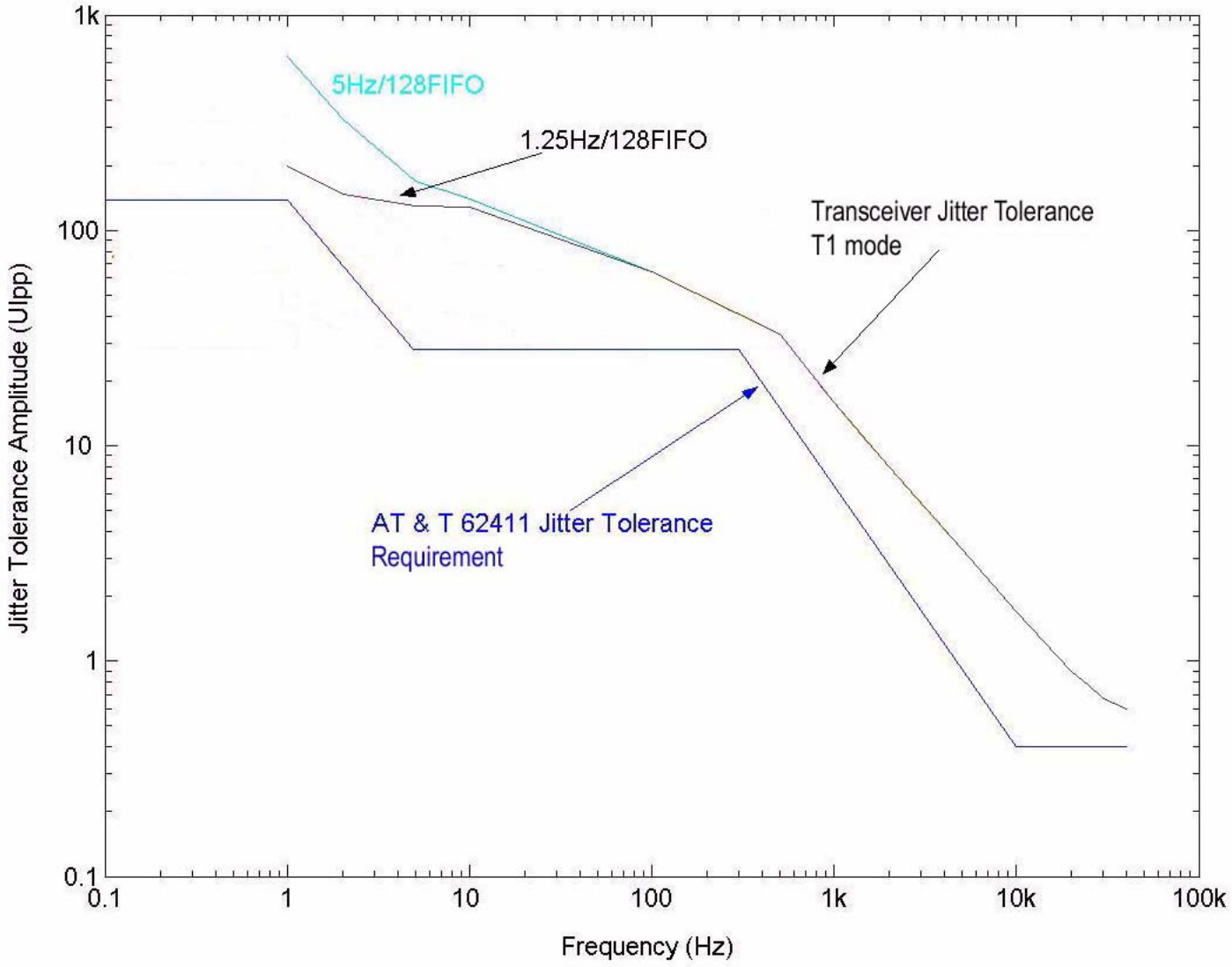

Figure 43. T1/J1 Jitter Tolerance Performance Requirement

7.10.2 E1 MODE

Jitter Tolerance	Min.	Typ.	Max	Unit	Standard
1 Hz	37			U.I.	G.823 Cable attenuation is 6 dB
20 Hz - 2.4 KHz	1.5			U.I.	
18 KHz - 100 KHz	0.2			U.I.	

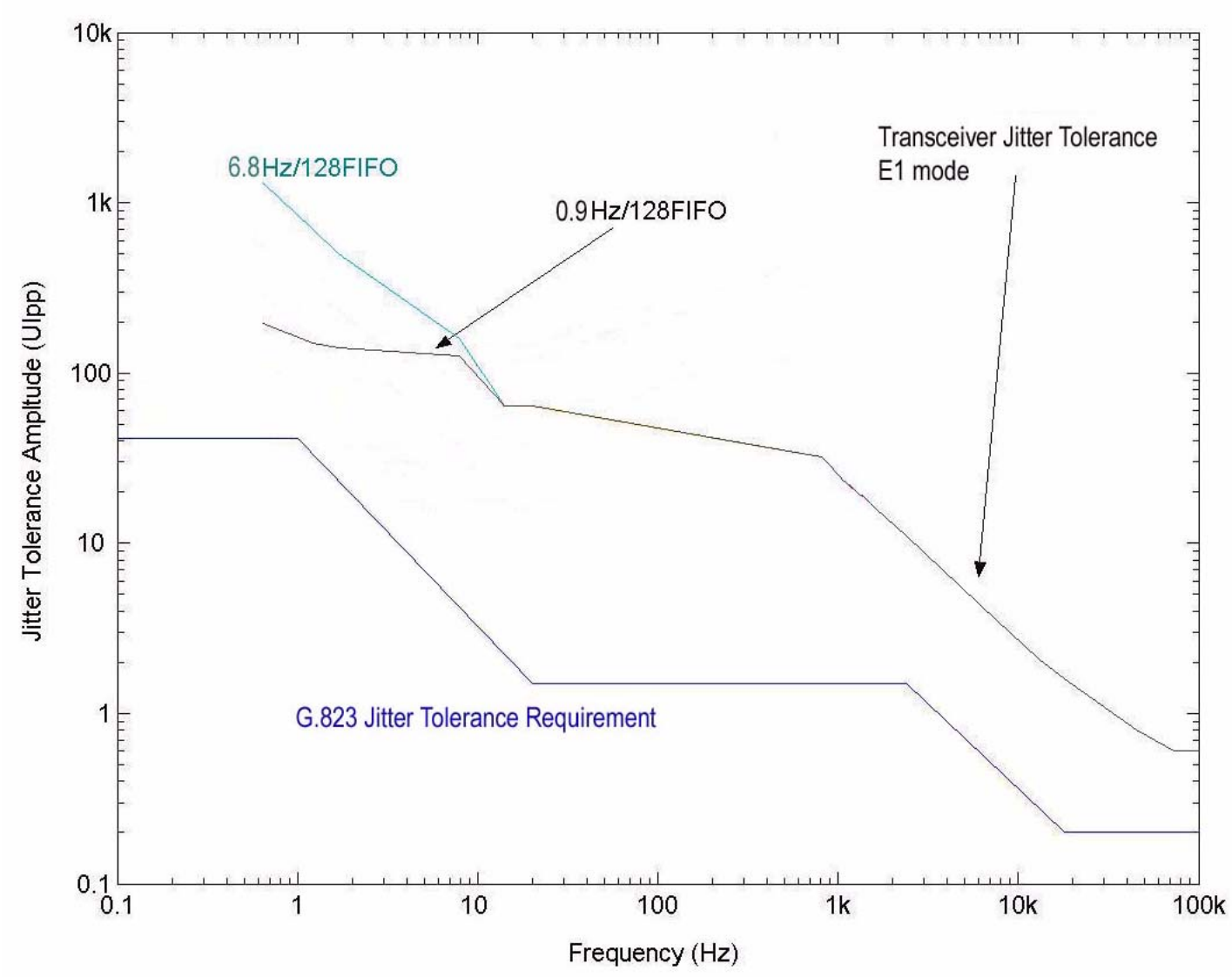

Figure 44. E1 Jitter Tolerance Performance Requirement

7.11 JITTER TRANSFER

Parameter	Min.	Typ.	Max	Unit
Jitter Attenuator Latency Delay				
32-bit FIFO:		16		U.I.
64-bit FIFO:		32		U.I.
128-bit FIFO:		64		U.I.
Input jitter tolerance before FIFO overflow or underflow				
32-bit FIFO:		28		U.I.
64-bit FIFO:		58		U.I.
128-bit FIFO:		120		U.I.

7.11.1 T1/J1 MODE

T1/J1 Jitter Transfer performance is required by AT&T pub.62411.

Parameter	Min.	Typ.	Max	Unit
@ 1 Hz	0			dB
@ 20 Hz	0			
@ 1 kHz	+33.3			
@ 1.4 kHz	40			
@ 70 kHz	40			

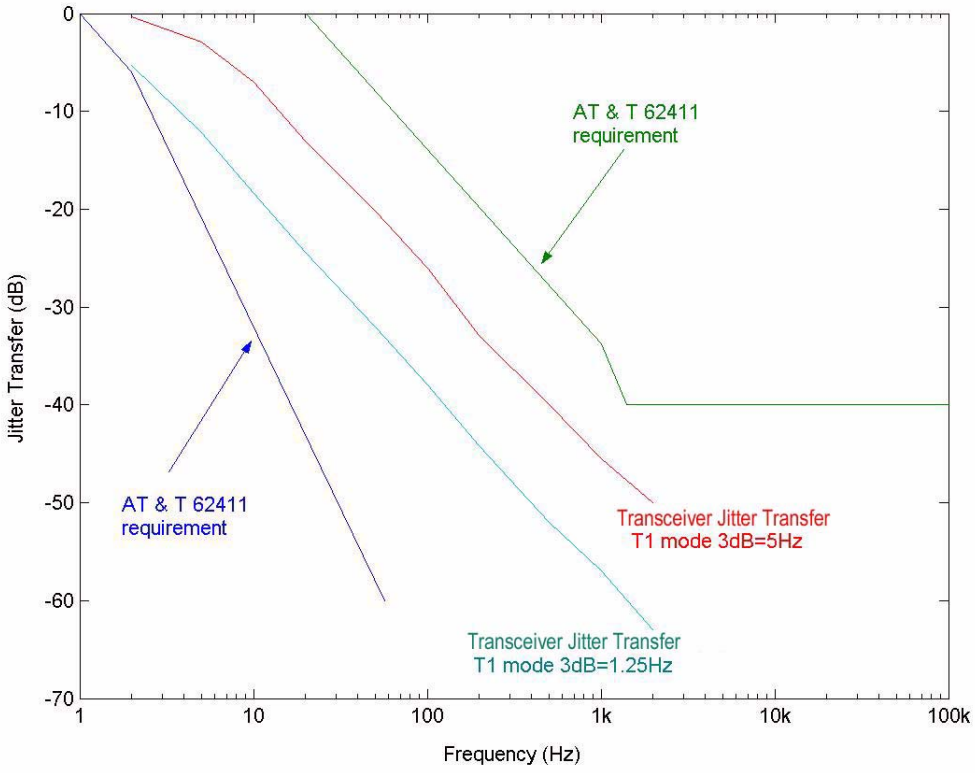

Figure 45. T1/J1 Jitter Transfer Performance Requirement (AT&T62411 / GR-253-CORE / TR-TSY-000009)

7.11.2 E1 MODE

E1 Jitter Transfer performance is required by G.736.

Parameter	Min.	Typ.	Max	Unit
@ 3 Hz	-0.5			dB
@ 40 Hz	-0.5			
@ 400 Hz	+19.5			
@ 100 kHz	+19.5			

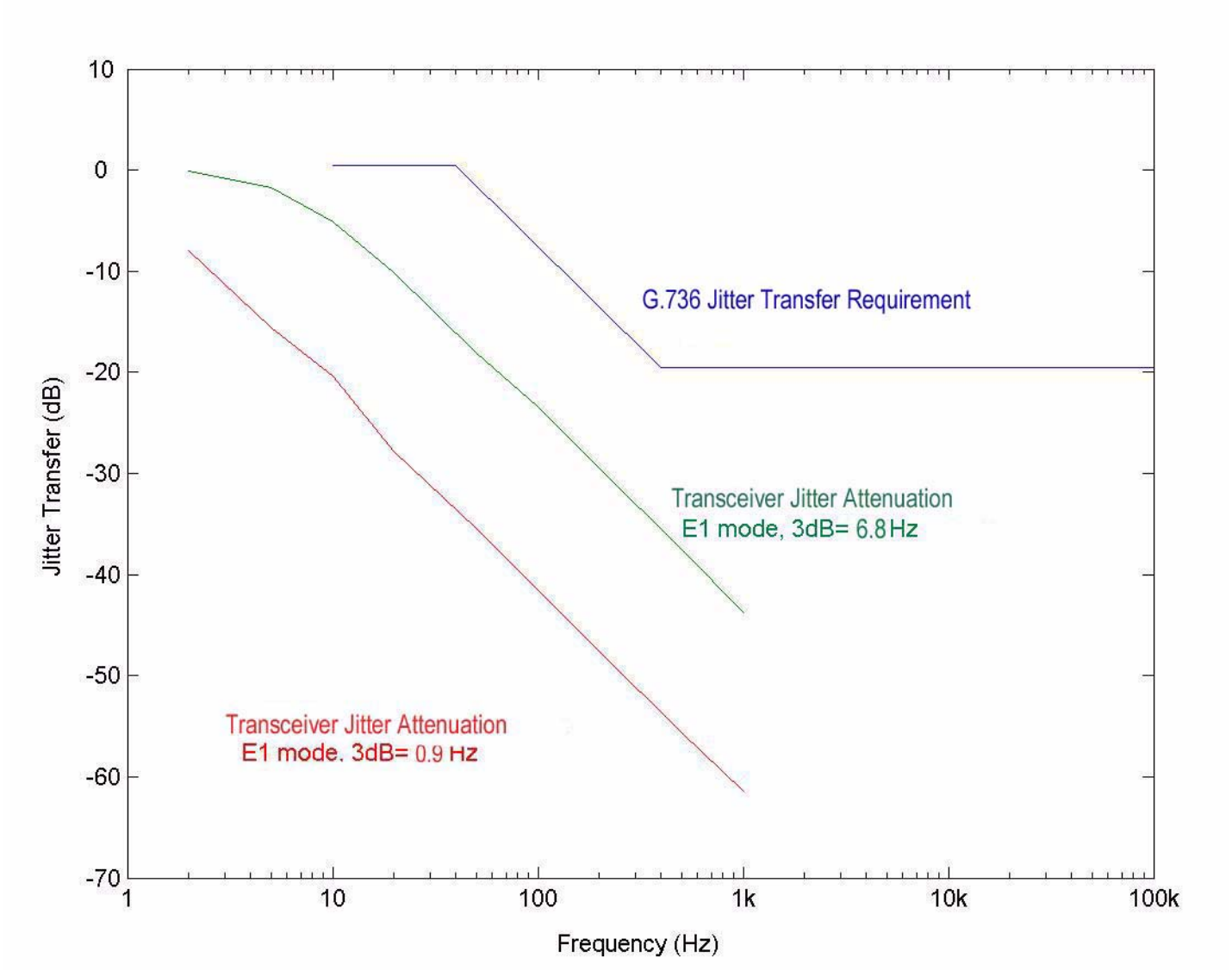

Figure 46. E1 Jitter Transfer Performance Requirement (G.736)

7.12 MICROPROCESSOR TIMING SPECIFICATION

7.12.1 MOTOROLA NON-MULTIPLEXED MODE

7.12.1.1 Read Cycle Specification

Symbol	Parameter	Min	Max	Units
tRC	Read Cycle Time	237		ns
tDW	Valid $\overline{DS}$ Width	232		ns
tRWV	Delay from $\overline{DS}$ to Valid Read Signal		21	ns
tRWH	R$\overline{W}$ to $\overline{DS}$ Hold Time	134		ns
tAV	Delay from $\overline{DS}$ to Valid Address		21	ns
tADH	Address to $\overline{DS}$ Hold Time	134		ns
tPRD	$\overline{DS}$ to Valid Read Data Propagation Delay		206	ns
tDAZ	Delay from Read Data Active to High Z	5	20	ns
tRecovery	Recovery Time from Read Cycle	5		ns

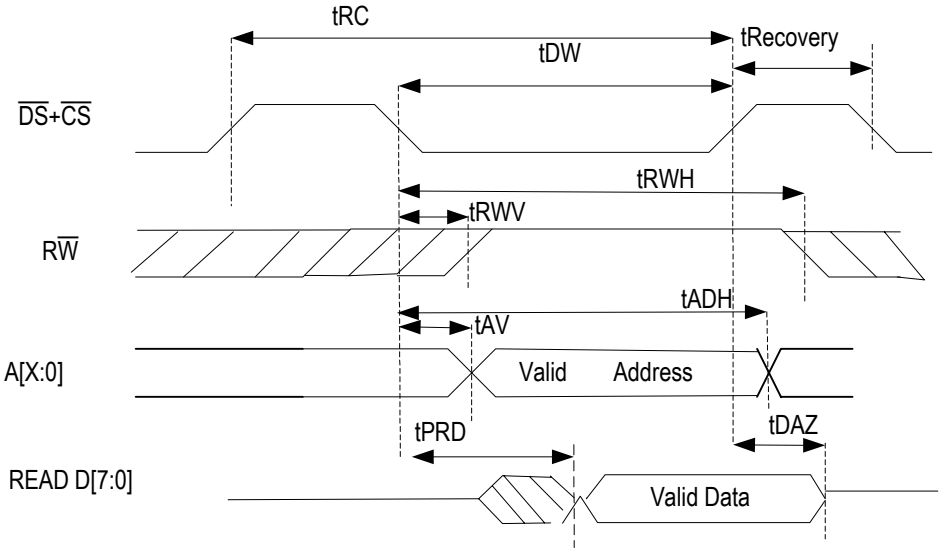

Figure 47. Motorola Non-Multiplexed Mode Read Cycle

7.12.1.2 Write Cycle Specification

Symbol	Parameter	Min	Max	Units
tWC	Write Cycle Time	237		ns
tDW	Valid $\overline{DS}$ width	232		ns
tRWV	Delay from $\overline{DS}$ to valid write signal		21	ns
tRWH	$R\overline{W}$ to $\overline{DS}$ Hold Time	165		ns
tAV	Delay from $\overline{DS}$ to Valid Address		21	ns
tAH	Address to $\overline{DS}$ Hold Time	165		ns
tDV	Delay from $\overline{DS}$ to valid write data		83	ns
tDHW	Write Data to $\overline{DS}$ Hold Time	165		ns
tRecovery	Recovery Time from Write Cycle	5		ns

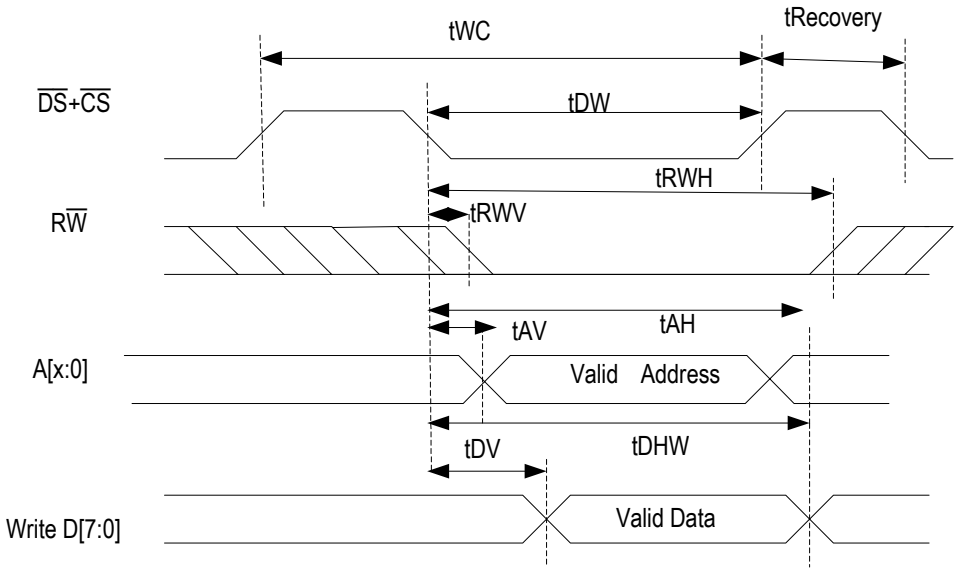

Figure 48. Motorola Non-Multiplexed Mode Write Cycle

7.12.2 INTEL NON-MULTIPLEXED MODE

7.12.2.1 Read Cycle Specification

Symbol	Parameter	Min	Max	Units
tRC	Read Cycle Time	237		ns
tRDW	Valid $\overline{RD}$ Width	232		ns
tAV	Delay from $\overline{RD}$ to Valid Address		21	ns
tAH	Address to $\overline{RD}$ Hold Time	134		ns
tPRD	$\overline{RD}$ to Valid Read Data Propagation Delay		206	ns
tDAZ	Delay from Read Data Active to High Z	5	20	ns
tRecovery	Recovery Time from Read Cycle	5		ns

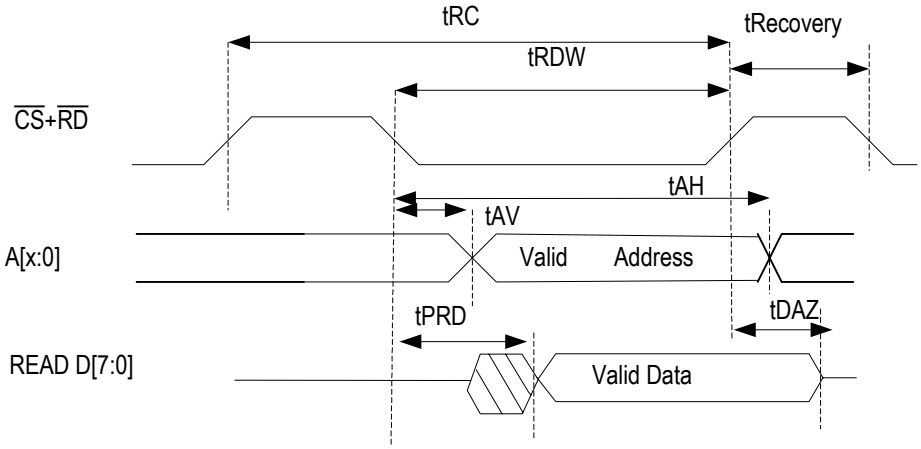

Note: The $\overline{WR}$ pin should be tied to high.

Figure 49. Intel Non-Multiplexed Mode Read Cycle

7.12.2.2 Write Cycle Specification

Symbol	Parameter	Min	Max	Units
tWC	Write Cycle Time	237		ns
tWRW	Valid $\overline{WR}$ width	232		ns
tAV	Delay from $\overline{WR}$ to Valid Address		21	ns
tAH	Address to $\overline{WR}$ Hold Time	165		ns
tDV	Delay from $\overline{WR}$ to valid write data		83	ns
tDHW	Write Data to $\overline{WR}$ Hold Time	165		ns
tRecovery	Recovery Time from Write Cycle	5		ns

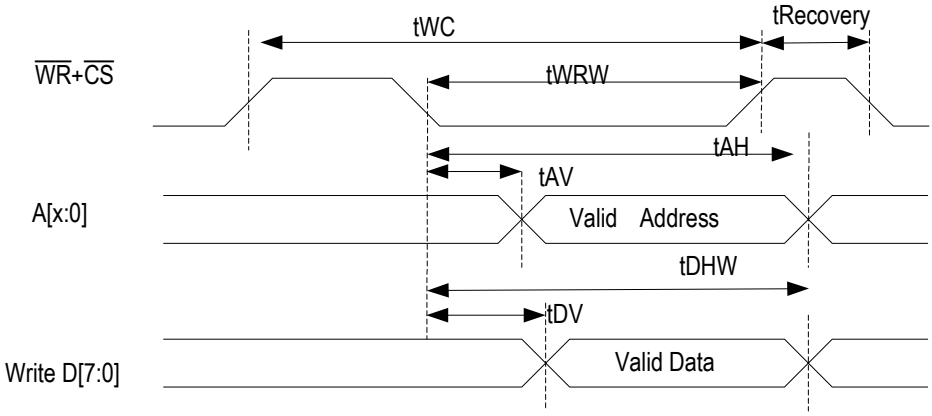

Note: The $\overline{RD}$ pin should be tied to high.

Figure 50. Intel Non-Multiplexed Mode Write Cycle

7.12.3 SPI MODE

The maximum SPI data transfer clock is 2 MHz.

Symbol	Description	Min.	Max	Units
f_{OP}	SCLK Frequency		2.0	MHz
t_{CSH}	Min. CS High Time	100		ns
t_{CSS}	$\overline{CS}$ Setup Time	50		ns
t_{CSD}	$\overline{CS}$ Hold Time	100		ns
t_{CLD}	Clock Disable Time	50		ns
t_{CLH}	Clock High Time	205		ns
t_{CLL}	Clock Low Time	205		ns
t_{DIS}	Data Setup Time	50		ns
t_{DIH}	Data Hold Time	150		ns
t_{PD}	Output Delay		150	ns
t_{DF}	Output Disable Time		50	ns

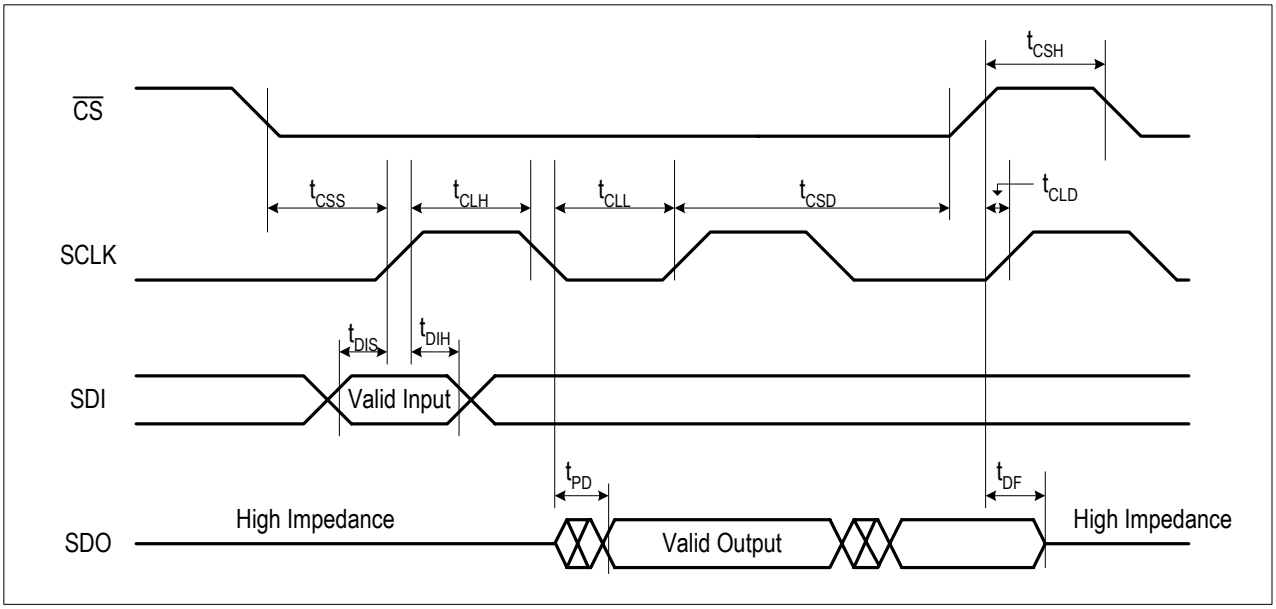

Figure 51. SPI Timing Diagram

ORDERING INFORMATION

IDT XXXXXXX XX X

Device Type | Package | Process/Temperature Range

BLANK	Industrial (-40 °C to +85 °C)
BB	Plastic Ball Grid Array (PBGA, BB208)
82P2284	Quad T1/E1/J1 Long / Short Haul Transceiver

CORPORATE HEADQUARTERS
2975 Stender Way
Santa Clara, CA 95054

for SALES:
800-345-7015 or 408-727-5116
fax: 408-492-8674
www.idt.com

for Tech Support:
408-330-1552
email: telecomhelp@idt.com

The IDT logo is a registered trademark of Integrated Device Technology, Inc.

OCEAN CHIPS
Океан Электроники
Поставка электронных компонентов

Компания «Океан Электроники» предлагает заключение долгосрочных отношений при поставках импортных электронных компонентов на взаимовыгодных условиях!

Наши преимущества:

- Поставка оригинальных импортных электронных компонентов напрямую с производств Америки, Европы и Азии, а так же с крупнейших складов мира;
- Широкая линейка поставок активных и пассивных импортных электронных компонентов (более 30 млн. наименований);
- Поставка сложных, дефицитных, либо снятых с производства позиций;
- Оперативные сроки поставки под заказ (от 5 рабочих дней);
- Экспресс доставка в любую точку России;
- Помощь Конструкторского Отдела и консультации квалифицированных инженеров;
- Техническая поддержка проекта, помощь в подборе аналогов, поставка прототипов;
- Поставка электронных компонентов под контролем ВП;
- Система менеджмента качества сертифицирована по Международному стандарту ISO 9001;
- При необходимости вся продукция военного и аэрокосмического назначения проходит испытания и сертификацию в лаборатории (по согласованию с заказчиком);
- Поставка специализированных компонентов военного и аэрокосмического уровня качества (Xilinx, Altera, Analog Devices, Intersil, Interpoint, Microsemi, Actel, Aeroflex, Peregrine, VPT, Syfer, Eurofarad, Texas Instruments, MS Kennedy, Miteq, Cobham, E2V, MA-COM, Hittite, Mini-Circuits, General Dynamics и др.);

Компания «Океан Электроники» является официальным дистрибьютором и эксклюзивным представителем в России одного из крупнейших производителей разъемов военного и аэрокосмического назначения **«JONHON»**, а так же официальным дистрибьютором и эксклюзивным представителем в России производителя высокотехнологичных и надежных решений для передачи СВЧ сигналов **«FORSTAR»**.

AVIC JONHON

«JONHON» (основан в 1970 г.)

Разъемы специального, военного и аэрокосмического назначения:

(Применяются в военной, авиационной, аэрокосмической, морской, железнодорожной, горно- и нефтедобывающей отраслях промышленности)

«FORSTAR» (основан в 1998 г.)

ВЧ соединители, коаксиальные кабели, кабельные сборки и микроволновые компоненты:

(Применяются в телекоммуникациях гражданского и специального назначения, в средствах связи, РЛС, а так же военной, авиационной и аэрокосмической отраслях промышленности).

FORSTAR®

Телефон: 8 (812) 309-75-97 (многоканальный)
Факс: 8 (812) 320-03-32
Электронная почта: ocean@oceanchips.ru
Web: http://oceanchips.ru/
Адрес: 198099, г. Санкт-Петербург, ул. Калинина, д. 2, корп. 4, лит. А