Monolithic Thermocouple Amplifiers with Cold Junction Compensation

AD594/AD595

FEATURES

Pretrimmed for Type J (AD594) or Type K (AD595) Thermocouples
Can Be Used with Type T Thermocouple Inputs
Low Impedance Voltage Output: 10 mV/°C
Built-In Ice Point Compensation
Wide Power Supply Range: +5 V to ±15 V
Low Power: <1 mW typical
Thermocouple Failure Alarm
Laser Wafer Trimmed to 1°C Calibration Accuracy
Setpoint Mode Operation
Self-Contained Celsius Thermometer Operation
High Impedance Differential Input
Side-Brazed DIP or Low Cost Cerdip

FUNCTIONAL BLOCK DIAGRAM

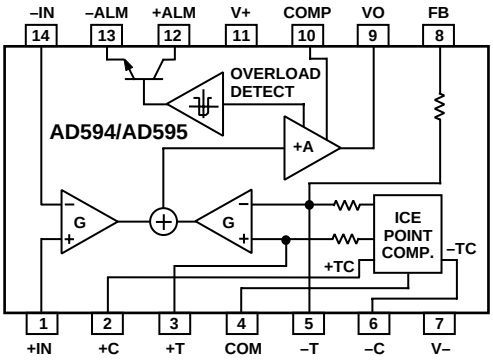

PRODUCT DESCRIPTION

The AD594/AD595 is a complete instrumentation amplifier and thermocouple cold junction compensator on a monolithic chip. It combines an ice point reference with a precalibrated amplifier to produce a high level (10 mV/°C) output directly from a thermocouple signal. Pin-strapping options allow it to be used as a linear amplifier-compensator or as a switched output setpoint controller using either fixed or remote setpoint control. It can be used to amplify its compensation voltage directly, thereby converting it to a stand-alone Celsius transducer with a low impedance voltage output.

The AD594/AD595 includes a thermocouple failure alarm that indicates if one or both thermocouple leads become open. The alarm output has a flexible format which includes TTL drive capability.

The AD594/AD595 can be powered from a single ended supply (including +5 V) and by including a negative supply, temperatures below 0°C can be measured. To minimize self-heating, an unloaded AD594/AD595 will typically operate with a total supply current 160 µA, but is also capable of delivering in excess of ±5 mA to a load.

The AD594 is precalibrated by laser wafer trimming to match the characteristic of type J (iron-constantan) thermocouples and the AD595 is laser trimmed for type K (chromel-alumel) inputs. The temperature transducer voltages and gain control resistors are available at the package pins so that the circuit can be recalibrated for the thermocouple types by the addition of two or three resistors. These terminals also allow more precise calibration for both thermocouple and thermometer applications.

The AD594/AD595 is available in two performance grades. The C and the A versions have calibration accuracies of ±1°C and ±3°C, respectively. Both are designed to be used from 0°C to +50°C, and are available in 14-pin, hermetically sealed, side-brazed ceramic DIPs as well as low cost cerdip packages.

PRODUCT HIGHLIGHTS

1. The AD594/AD595 provides cold junction compensation, amplification, and an output buffer in a single IC package.
2. Compensation, zero, and scale factor are all precalibrated by laser wafer trimming (LWT) of each IC chip.
3. Flexible pinout provides for operation as a setpoint controller or a stand-alone temperature transducer calibrated in degrees Celsius.
4. Operation at remote application sites is facilitated by low quiescent current and a wide supply voltage range +5 V to dual supplies spanning 30 V.
5. Differential input rejects common-mode noise voltage on the thermocouple leads.

REV. C

Information furnished by Analog Devices is believed to be accurate and reliable. However, no responsibility is assumed by Analog Devices for its use, nor for any infringements of patents or other rights of third parties which may result from its use. No license is granted by implication or otherwise under any patent or patent rights of Analog Devices.

One Technology Way, P.O. Box 9106, Norwood, MA 02062-9106, U.S.A.
Tel: 781/329-4700 World Wide Web Site: http://www.analog.com
Fax: 781/326-8703
© Analog Devices, Inc., 1999

AD594/AD595–SPECIFICATIONS (@ +25°C and V_S = 5 V, Type J (AD594), Type K (AD595) Thermocouple, unless otherwise noted)

Model	AD594A			AD594C			AD595A			AD595C			
	Min	Typ	Max	Min	Typ	Max	Min	Typ	Max	Min	Typ	Max	Units
ABSOLUTE MAXIMUM RATING													
$+V_S$ to $-V_S$			36			36			36			36	Volts
Common-Mode Input Voltage	$-V_S - 0.15$		$+V_S$	$-V_S - 0.15$		$+V_S$	$-V_S - 0.15$		$+V_S$	$-V_S - 0.15$		$+V_S$	Volts
Differential Input Voltage	$-V_S$		$+V_S$	$-V_S$		$+V_S$	$-V_S$		$+V_S$	$-V_S$		$+V_S$	Volts
Alarm Voltages													
+ALM	$-V_S$		$-V_S + 36$	$-V_S$		$-V_S + 36$	$-V_S$		$-V_S + 36$	$-V_S$		$-V_S + 36$	Volts
–ALM	$-V_S$		$+V_S$	$-V_S$		$+V_S$	$-V_S$		$+V_S$	$-V_S$		$+V_S$	Volts
Operating Temperature Range	–55		+125	–55		+125	–55		+125	–55		+125	°C
Output Short Circuit to Common	Indefinite			Indefinite			Indefinite			Indefinite			
TEMPERATURE MEASUREMENT (Specified Temperature Range 0°C to +50°C)													
Calibration Error at +25°C[1]			**±3**			**±1**			**±3**			**±1**	°C
Stability vs. Temperature[2]			**±0.05**			**±0.025**			**±0.05**			**±0.025**	°C/°C
Gain Error			**±1.5**			**±0.75**			**±1.5**			**±0.75**	%
Nominal Transfer Function			10			10			10			10	mV/°C
AMPLIFIER CHARACTERISTICS													
Closed Loop Gain[3]		**193.4**			**193.4**			**247.3**			**247.3**		
Input Offset Voltage		(Temperature in °C) × 51.70 µV/°C			(Temperature in °C) × 51.70 µV/°C			(Temperature in °C) × 40.44 µV/°C			(Temperature in °C) × 40.44 µV/°C		µV
Input Bias Current		0.1			0.1			0.1			0.1		µA
Differential Input Range	–10		+50				–10		+50	–10		+50	mV
Common-Mode Range	**$-V_S - 0.15$**		**$-V_S - 4$**	**$-V_S - 0.15$**		**$-V_S - 4$**	**$-V_S - 0.15$**		**$-V_S - 4$**	**$-V_S - 0.15$**		**$-V_S - 4$**	Volts
Common-Mode Sensitivity – RTO			**10**			**10**			**10**			**10**	mV/V
Power Supply Sensitivity – RTO			**10**			**10**			**10**			**10**	mV/V
Output Voltage Range													
Dual Supply	**$-V_S + 2.5$**		**$+V_S - 2$**	**$-V_S + 2.5$**		**$+V_S - 2$**	**$-V_S + 2.5$**		**$+V_S - 2$**	**$-V_S + 2.5$**		**$+V_S - 2$**	Volts
Single Supply	0		$+V_S - 2$	0		$-V_S - 2$	0		$+V_S + 2$	0		$+V_S - 2$	Volts
Usable Output Current[4]		±5			±5			±5			±5		mA
3 dB Bandwidth		15			15			15			15		kHz
ALARM CHARACTERISTICS													
$V_{CE(SAT)}$ at 2 mA		0.3			0.3			0.3			0.3		Volts
Leakage Current			**±1**			**±1**			**±1**			**±1**	µA max
Operating Voltage at – ALM			**$+V_S - 4$**			**$+V_S - 4$**			**$+V_S - 4$**			**$+V_S - 4$**	Volts
Short Circuit Current		20			20			20			20		mA
POWER REQUIREMENTS													
Specified Performance		$+V_S = 5, -V_S = 0$			$+V_S = 5, -V_S = 0$			$+V_S = 5, -V_S = 0$			$+V_S = 5, -V_S = 0$		Volts
Operating[5]		$+V_S$ to $-V_S \leq 30$			$+V_S$ to $-V_S \leq 30$			$+V_S$ to $-V_S \leq 30$			$+V_S$ to $-V_S \leq 30$		Volts
Quiescent Current (No Load)													
$+V_S$		160	300		160	300		160	300		160	300	µA
$-V_S$		100			100			100			100		µA
PACKAGE OPTION													
TO-116 (D-14)		AD594AD			AD594CD			AD595AD			AD595CD		
Cerdip (Q-14)		AD594AQ			AD594CQ			AD595AQ			AD595CQ		

NOTES
[1]Calibrated for minimum error at +25°C using a thermocouple sensitivity of 51.7 µV/°C. Since a J type thermocouple deviates from this straight line approximation, the AD594 will normally read 3.1 mV when the measuring junction is at 0°C. The AD595 will similarly read 2.7 mV at 0°C.
[2]Defined as the slope of the line connecting the AD594/AD595 errors measured at 0°C and 50°C ambient temperature.
[3]Pin 8 shorted to Pin 9.
[4]Current Sink Capability in single supply configuration is limited to current drawn to ground through a 50 kΩ resistor at output voltages below 2.5 V.
[5]$-V_S$ must not exceed –16.5 V.

Specifications shown in **boldface** are tested on all production units at final electrical test. Results from those tests are used to calculate outgoing quality levels. All min and max specifications are guaranteed, although only those shown in **boldface** are tested on all production units.
Specifications subject to change without notice.

INTERPRETING AD594/AD595 OUTPUT VOLTAGES

To achieve a temperature proportional output of 10 mV/°C and accurately compensate for the reference junction over the rated operating range of the circuit, the AD594/AD595 is gain trimmed to match the transfer characteristic of J and K type thermocouples at 25°C. For a type J output in this temperature range the TC is 51.70 µV/°C, while for a type K it is 40.44 µV/°C. The resulting gain for the AD594 is 193.4 (10 mV/°C divided by 51.7 µV/°C) and for the AD595 is 247.3 (10 mV/°C divided by 40.44 µV/°C). In addition, an absolute accuracy trim induces an input offset to the output amplifier characteristic of 16 µV for the AD594 and 11 µV for the AD595. This offset arises because the AD594/AD595 is trimmed for a 250 mV output while applying a 25°C thermocouple input.

Because a thermocouple output voltage is nonlinear with respect to temperature, and the AD594/AD595 linearly amplifies the compensated signal, the following transfer functions should be used to determine the actual output voltages:

$$AD594\ output = (Type\ J\ Voltage + 16\ \mu V) \times 193.4$$

$$AD595\ output = (Type\ K\ Voltage + 11\ \mu V) \times 247.3\ \textit{or conversely:}$$

$$Type\ J\ voltage = (AD594\ output/193.4) - 16\ \mu V$$

$$Type\ K\ voltage = (AD595\ output/247.3) - 11\ \mu V$$

Table I lists the ideal AD594/AD595 output voltages as a function of Celsius temperature for type J and K ANSI standard thermocouples, with the package and reference junction at 25°C. As is normally the case, these outputs are subject to calibration, gain and temperature sensitivity errors. Output values for intermediate temperatures can be interpolated, or calculated using the output equations and ANSI thermocouple voltage tables referred to zero degrees Celsius. Due to a slight variation in alloy content between ANSI type J and DIN FE-CUNI

Table I. Output Voltage vs. Thermocouple Temperature (Ambient +25°C, V_S = –5 V, +15 V)

Thermocouple Temperature °C	Type J Voltage mV	AD594 Output mV	Type K Voltage mV	AD595 Output mV
–200	–7.890	–1523	–5.891	–1454
–180	–7.402	–1428	–5.550	–1370
–160	–6.821	–1316	–5.141	–1269
–140	–6.159	–1188	–4.669	–1152
–120	–5.426	–1046	–4.138	–1021
–100	–4.632	–893	–3.553	–876
–80	–3.785	–729	–2.920	–719
–60	–2.892	–556	–2.243	–552
–40	–1.960	–376	–1.527	–375
–20	–.995	–189	–.777	–189
–10	–.501	–94	–.392	–94
0	0	3.1	0	2.7
10	.507	101	.397	101
20	1.019	200	.798	200
25	1.277	250	1.000	250
30	1.536	300	1.203	300
40	2.058	401	1.611	401
50	2.585	503	2.022	503
60	3.115	606	2.436	605
80	4.186	813	3.266	810
100	5.268	1022	4.095	1015
120	6.359	1233	4.919	1219
140	7.457	1445	5.733	1420
160	8.560	1659	6.539	1620
180	9.667	1873	7.338	1817
200	10.777	2087	8.137	2015
220	11.887	2302	8.938	2213
240	12.998	2517	9.745	2413
260	14.108	2732	10.560	2614
280	15.217	2946	11.381	2817
300	16.325	3160	12.207	3022
320	17.432	3374	13.039	3227
340	18.537	3588	13.874	3434
360	19.640	3801	14.712	3641
380	20.743	4015	15.552	3849
400	21.846	4228	16.395	4057
420	22.949	4441	17.241	4266
440	24.054	4655	18.088	4476
460	25.161	4869	18.938	4686
480	26.272	5084	19.788	4896
500	27.388	5300	20.640	5107
520	28.511	5517	21.493	5318
540	29.642	5736	22.346	5529
560	30.782	5956	23.198	5740
580	31.933	6179	24.050	5950
600	33.096	6404	24.902	6161
620	34.273	6632	25.751	6371
640	35.464	6862	26.599	6581
660	36.671	7095	27.445	6790
680	37.893	7332	28.288	6998
700	39.130	7571	29.128	7206
720	40.382	7813	29.965	7413
740	41.647	8058	30.799	7619
750	42.283	8181	31.214	7722
760	–	–	31.629	7825
780	–	–	32.455	8029
800	–	–	33.277	8232
820	–	–	34.095	8434
840	–	–	34.909	8636
860	–	–	35.718	8836
880	–	–	36.524	9035
900	–	–	37.325	9233
920	–	–	38.122	9430
940	–	–	38.915	9626
960	–	–	39.703	9821
980	–	–	40.488	10015
1000	–	–	41.269	10209
1020	–	–	42.045	10400
1040	–	–	42.817	10591
1060	–	–	43.585	10781
1080	–	–	44.439	10970
1100	–	–	45.108	11158
1120	–	–	45.863	11345
1140	–	–	46.612	11530
1160	–	–	47.356	11714
1180	–	–	48.095	11897
1200	–	–	48.828	12078
1220	–	–	49.555	12258
1240	–	–	50.276	12436
1250	–	–	50.633	12524

thermocouples Table I should not be used in conjunction with European standard thermocouples. Instead the transfer function given previously and a DIN thermocouple table should be used. ANSI type K and DIN NICR-NI thermocouples are composed

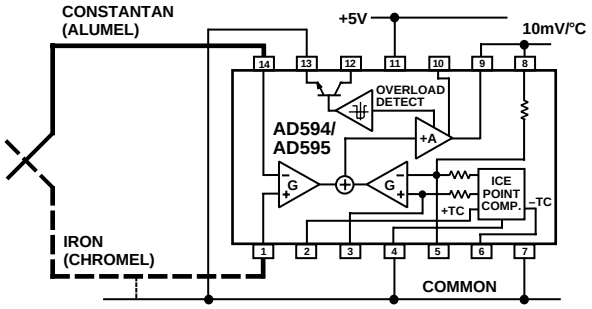

Figure 1. Basic Connection, Single Supply Operation

of identical alloys and exhibit similar behavior. The upper temperature limits in Table I are those recommended for type J and type K thermocouples by the majority of vendors.

SINGLE AND DUAL SUPPLY CONNECTIONS

The AD594/AD595 is a completely self-contained thermocouple conditioner. Using a single +5 V supply the interconnections shown in Figure 1 will provide a direct output from a type J thermocouple (AD594) or type K thermocouple (AD595) measuring from 0°C to +300°C.

Any convenient supply voltage from +5 V to +30 V may be used, with self-heating errors being minimized at lower supply levels. In the single supply configuration the +5 V supply connects to Pin 11 with the V– connection at Pin 7 strapped to power and signal common at Pin 4. The thermocouple wire inputs connect to Pins 1 and 14 either directly from the measuring point or through intervening connections of similar thermocouple wire type. When the alarm output at Pin 13 is not used it should be connected to common or –V. The precalibrated feedback network at Pin 8 is tied to the output at Pin 9 to provide a 10 mV/°C nominal temperature transfer characteristic.

By using a wider ranging dual supply, as shown in Figure 2, the AD594/AD595 can be interfaced to thermocouples measuring both negative and extended positive temperatures.

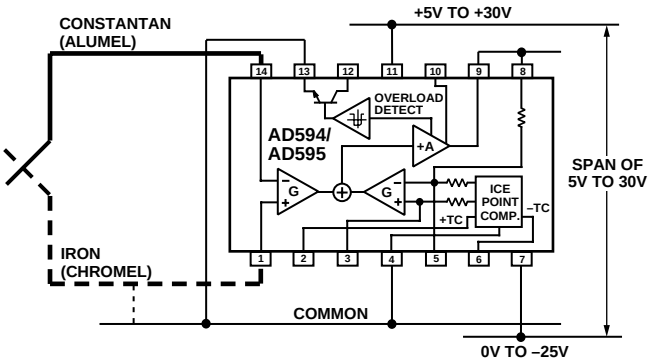

Figure 2. Dual Supply Operation

With a negative supply the output can indicate negative temperatures and drive grounded loads or loads returned to positive voltages. Increasing the positive supply from 5 V to 15 V extends the output voltage range well beyond the 750°C temperature limit recommended for type J thermocouples (AD594) and the 1250°C for type K thermocouples (AD595).

Common-mode voltages on the thermocouple inputs must remain within the common-mode range of the AD594/AD595, with a return path provided for the bias currents. If the thermocouple is not remotely grounded, then the dotted line connections in Figures 1 and 2 are recommended. A resistor may be needed in this connection to assure that common-mode voltages induced in the thermocouple loop are not converted to normal mode.

THERMOCOUPLE CONNECTIONS

The isothermal terminating connections of a pair of thermocouple wires forms an effective reference junction. This junction must be kept at the same temperature as the AD594/AD595 for the internal cold junction compensation to be effective.

A method that provides for thermal equilibrium is the printed circuit board connection layout illustrated in Figure 3.

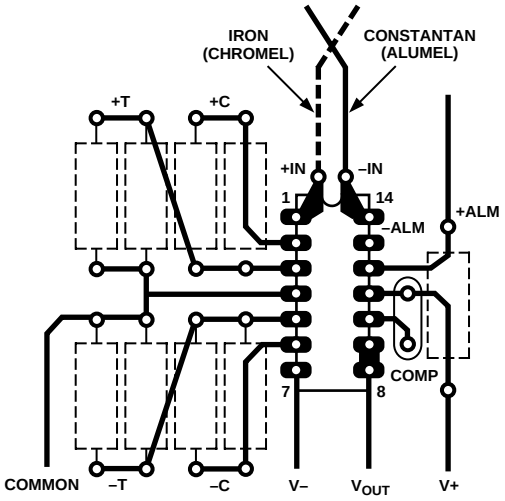

Figure 3. PCB Connections

Here the AD594/AD595 package temperature and circuit board are thermally contacted in the copper printed circuit board tracks under Pins 1 and 14. The reference junction is now composed of a copper-constantan (or copper-alumel) connection and copper-iron (or copper-chromel) connection, both of which are at the same temperature as the AD594/AD595.

The printed circuit board layout shown also provides for placement of optional alarm load resistors, recalibration resistors and a compensation capacitor to limit bandwidth.

To ensure secure bonding the thermocouple wire should be cleaned to remove oxidation prior to soldering. Noncorrosive rosin flux is effective with iron, constantan, chromel and alumel and the following solders: 95% tin-5% antimony, 95% tin-5% silver or 90% tin-10% lead.

FUNCTIONAL DESCRIPTION

The AD594 behaves like two differential amplifiers. The outputs are summed and used to control a high gain amplifier, as shown in Figure 4.

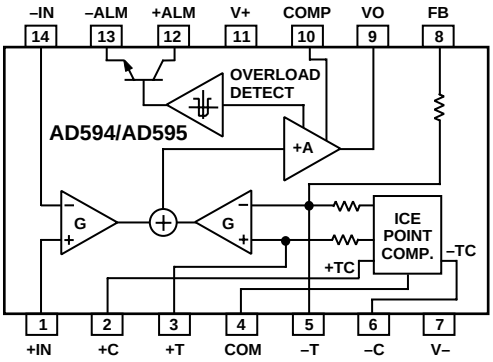

Figure 4. AD594/AD595 Block Diagram

In normal operation the main amplifier output, at Pin 9, is connected to the feedback network, at Pin 8. Thermocouple signals applied to the floating input stage, at Pins 1 and 14, are amplified by gain G of the differential amplifier and are then further amplified by gain A in the main amplifier. The output of the main amplifier is fed back to a second differential stage in an inverting connection. The feedback signal is amplified by this stage and is also applied to the main amplifier input through a summing circuit. Because of the inversion, the amplifier causes the feedback to be driven to reduce this difference signal to a small value. The two differential amplifiers are made to match and have identical gains, G. As a result, the feedback signal that must be applied to the right-hand differential amplifier will precisely match the thermocouple input signal when the difference signal has been reduced to zero. The feedback network is trimmed so that the effective gain to the output, at Pins 8 and 9, results in a voltage of 10 mV/°C of thermocouple excitation.

In addition to the feedback signal, a cold junction compensation voltage is applied to the right-hand differential amplifier. The compensation is a differential voltage proportional to the Celsius temperature of the AD594/AD595. This signal disturbs the differential input so that the amplifier output must adjust to restore the input to equal the applied thermocouple voltage.

The compensation is applied through the gain scaling resistors so that its effect on the main output is also 10 mV/°C. As a result, the compensation voltage adds to the effect of the thermocouple voltage a signal directly proportional to the difference between 0°C and the AD594/AD595 temperature. If the thermocouple reference junction is maintained at the AD594/AD595 temperature, the output of the AD594/AD595 will correspond to the reading that would have been obtained from amplification of a signal from a thermocouple referenced to an ice bath.

The AD594/AD595 also includes an input open circuit detector that switches on an alarm transistor. This transistor is actually a current-limited output buffer, but can be used up to the limit as a switch transistor for either pull-up or pull-down operation of external alarms.

The ice point compensation network has voltages available with positive and negative temperature coefficients. These voltages may be used with external resistors to modify the ice point compensation and recalibrate the AD594/AD595 as described in the next column.

The feedback resistor is separately pinned out so that its value can be padded with a series resistor, or replaced with an external resistor between Pins 5 and 9. External availability of the feedback resistor allows gain to be adjusted, and also permits the AD594/AD595 to operate in a switching mode for setpoint operation.

CAUTIONS:
The temperature compensation terminals (+C and –C) at Pins 2 and 6 are provided to supply small calibration currents only. The AD594/AD595 may be permanently damaged if they are grounded or connected to a low impedance.

The AD594/AD595 is internally frequency compensated for feedback ratios (corresponding to normal signal gain) of 75 or more. If a lower gain is desired, additional frequency compensation should be added in the form of a 300 pF capacitor from Pin 10 to the output at Pin 9. As shown in Figure 5 an additional 0.01 µF capacitor between Pins 10 and 11 is recommended.

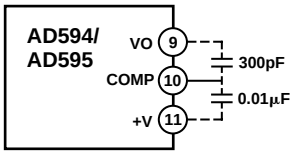

Figure 5. Low Gain Frequency Compensation

RECALIBRATION PRINCIPLES AND LIMITATIONS
The ice point compensation network of the AD594/AD595 produces a differential signal which is zero at 0°C and corresponds to the output of an ice referenced thermocouple at the temperature of the chip. The positive TC output of the circuit is proportional to Kelvin temperature and appears as a voltage at +T. It is possible to decrease this signal by loading it with a resistor from +T to COM, or increase it with a pull-up resistor from +T to the larger positive TC voltage at +C. Note that adjustments to +T should be made by measuring the voltage which tracks it at –T. To avoid destabilizing the feedback amplifier the measuring instrument should be isolated by a few thousand ohms in series with the lead connected to –T.

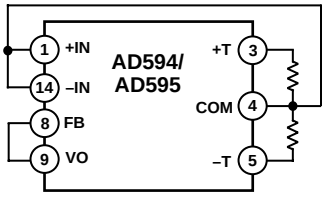

Figure 6. Decreased Sensitivity Adjustment

Changing the positive TC half of the differential output of the compensation scheme shifts the zero point away from 0°C. The zero can be restored by adjusting the current flow into the negative input of the feedback amplifier, the –T pin. A current into this terminal can be produced with a resistor between –C and –T to balance an increase in +T, or a resistor from –T to COM to offset a decrease in +T.

If the compensation is adjusted substantially to accommodate a different thermocouple type, its effect on the final output voltage will increase or decrease in proportion. To restore the nominal output to 10 mV/°C the gain may be adjusted to match the new compensation and thermocouple input characteristics. When reducing the compensation the resistance between –T and COM automatically increases the gain to within 0.5% of the correct value. If a smaller gain is required, however, the nominal 47 kΩ internal feedback resistor can be paralleled or replaced with an external resistor.

Fine calibration adjustments will require temperature response measurements of individual devices to assure accuracy. Major reconfigurations for other thermocouple types can be achieved without seriously compromising initial calibration accuracy, so long as the procedure is done at a fixed temperature using the factory calibration as a reference. It should be noted that intermediate recalibration conditions may require the use of a negative supply.

EXAMPLE: TYPE E RECALIBRATION—AD594/AD595
Both the AD594 and AD595 can be configured to condition the output of a type E (chromel-constantan) thermocouple. Temperature characteristics of type E thermocouples differ less from type J, than from type K, therefore the AD594 is preferred for recalibration.

While maintaining the device at a constant temperature follow the recalibration steps given here. First, measure the device temperature by tying both inputs to common (or a selected common-mode potential) and connecting FB to VO. The AD594 is now in the stand alone Celsius thermometer mode. For this example assume the ambient is 24°C and the initial output VO is 240 mV. Check the output at VO to verify that it corresponds to the temperature of the device.

Next, measure the voltage –T at Pin 5 with a high impedance DVM (capacitance should be isolated by a few thousand ohms of resistance at the measured terminals). At 24°C the –T voltage will be about 8.3 mV. To adjust the compensation of an AD594 to a type E thermocouple a resistor, R1, should be connected between +T and +C, Pins 2 and 3, to raise the voltage at –T by the ratio of thermocouple sensitivities. The ratio for converting a type J device to a type E characteristic is:

$$r\,(AD594) = (60.9\ \mu V/°C)/(51.7\ \mu V/°C) = 1.18$$

Thus, multiply the initial voltage measured at –T by r and experimentally determine the R1 value required to raise –T to that level. For the example the new –T voltage should be about 9.8 mV. The resistance value should be approximately 1.8 kΩ.

The zero differential point must now be shifted back to 0°C. This is accomplished by multiplying the original output voltage VO by r and adjusting the measured output voltage to this value by experimentally adding a resistor, R2, between –C and –T, Pins 5 and 6. The target output value in this case should be about 283 mV. The resistance value of R2 should be approximately 240 kΩ.

Finally, the gain must be recalibrated such that the output VO indicates the device's temperature once again. Do this by adding a third resistor, R3, between FB and –T, Pins 8 and 5. VO should now be back to the initial 240 mV reading. The resistance value

of R3 should be approximately 280 kΩ. The final connection diagram is shown in Figure 7. An approximate verification of the effectiveness of recalibration is to measure the differential gain to the output. For type E it should be 164.2.

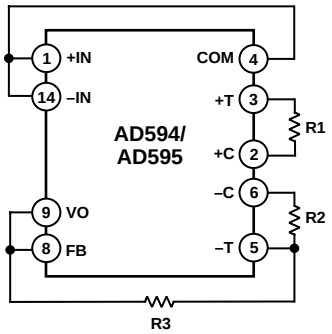

Figure 7. Type E Recalibration

When implementing a similar recalibration procedure for the AD595 the values for R1, R2, R3 and r will be approximately 650 Ω, 84 kΩ, 93 kΩ and 1.51, respectively. Power consumption will increase by about 50% when using the AD595 with type E inputs.

Note that during this procedure it is crucial to maintain the AD594/AD595 at a stable temperature because it is used as the temperature reference. Contact with fingers or any tools not at ambient temperature will quickly produce errors. Radiational heating from a change in lighting or approach of a soldering iron must also be guarded against.

USING TYPE T THERMOCOUPLES WITH THE AD595

Because of the similarity of thermal EMFs in the 0°C to +50°C range between type K and type T thermocouples, the AD595 can be directly used with both types of inputs. Within this ambient temperature range the AD595 should exhibit no more than an additional 0.2°C output calibration error when used with type T inputs. The error arises because the ice point compensator is trimmed to type K characteristics at 25°C. To calculate the AD595 output values over the recommended –200°C to +350°C range for type T thermocouples, simply use the ANSI thermocouple voltages referred to 0°C and the output equation given on page 2 for the AD595. Because of the relatively large nonlinearities associated with type T thermocouples the output will deviate widely from the nominal 10 mV/°C. However, cold junction compensation over the rated 0°C to +50°C ambient will remain accurate.

STABILITY OVER TEMPERATURE

Each AD594/AD595 is tested for error over temperature with the measuring thermocouple at 0°C. The combined effects of cold junction compensation error, amplifier offset drift and gain error determine the stability of the AD594/AD595 output over the rated ambient temperature range. Figure 8 shows an AD594/AD595 drift error envelope. The slope of this figure has units of °C/°C.

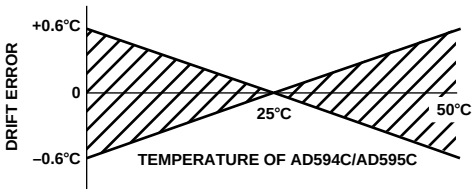

Figure 8. Drift Error vs. Temperature

THERMAL ENVIRONMENT EFFECTS

The inherent low power dissipation of the AD594/AD595 and the low thermal resistance of the package make self-heating errors almost negligible. For example, in still air the chip to ambient thermal resistance is about 80°C/watt (for the D package). At the nominal dissipation of 800 μW the self-heating in free air is less than 0.065°C. Submerged in fluorinert liquid (unstirred) the thermal resistance is about 40°C/watt, resulting in a self-heating error of about 0.032°C.

SETPOINT CONTROLLER

The AD594/AD595 can readily be connected as a setpoint controller as shown in Figure 9.

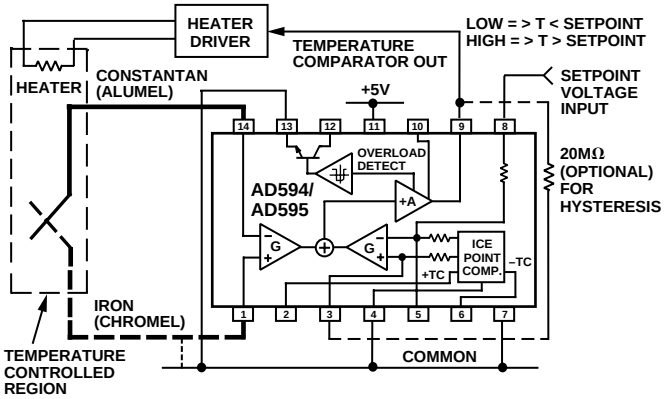

Figure 9. Setpoint Controller

The thermocouple is used to sense the unknown temperature and provide a thermal EMF to the input of the AD594/AD595. The signal is cold junction compensated, amplified to 10 mV/°C and compared to an external setpoint voltage applied by the user to the feedback at Pin 8. Table I lists the correspondence between setpoint voltage and temperature, accounting for the nonlinearity of the measurement thermocouple. If the setpoint temperature range is within the operating range (–55°C to +125°C) of the AD594/AD595, the chip can be used as the transducer for the circuit by shorting the inputs together and utilizing the nominal calibration of 10 mV/°C. This is the centigrade thermometer configuration as shown in Figure 13.

In operation if the setpoint voltage is above the voltage corresponding to the temperature being measured the output swings low to approximately zero volts. Conversely, when the temperature rises above the setpoint voltage the output switches to the positive limit of about 4 volts with a +5 V supply. Figure 9 shows the setpoint comparator configuration complete with a heater element driver circuit being controlled by the AD594/AD595 toggled output. Hysteresis can be introduced by injecting a current into the positive input of the feedback amplifier when the output is toggled high. With an AD594 about 200 nA into the +T terminal provides 1°C of hysteresis. When using a single 5 V supply with an AD594, a 20 MΩ resistor from V_O to +T will supply the 200 nA of current when the output is forced high (about 4 V). To widen the hysteresis band decrease the resistance connected from VO to +T.

ALARM CIRCUIT

In all applications of the AD594/AD595 the –ALM connection, Pin 13, should be constrained so that it is not more positive than (V+) – 4 V. This can be most easily achieved by connecting Pin 13 to either common at Pin 4 or V– at Pin 7. For most applications that use the alarm signal, Pin 13 will be grounded and the signal will be taken from +ALM on Pin 12. A typical application is shown in Figure 10.

In this configuration the alarm transistor will be off in normal operation and the 20 k pull up will cause the +ALM output on Pin 12 to go high. If one or both of the thermocouple leads are interrupted, the +ALM pin will be driven low. As shown in Figure 10 this signal is compatible with the input of a TTL gate which can be used as a buffer and/or inverter.

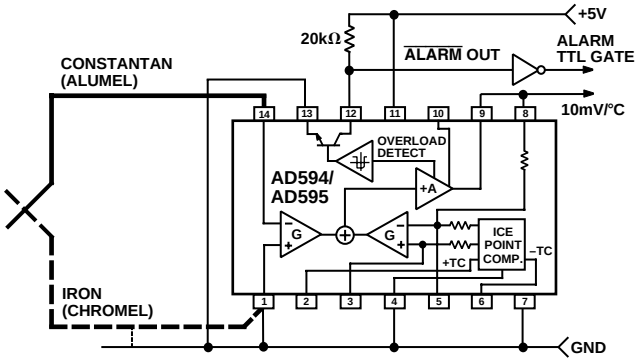

Figure 10. Using the Alarm to Drive a TTL Gate ("Grounded" Emitter Configuration)

Since the alarm is a high level output it may be used to directly drive an LED or other indicator as shown in Figure 11.

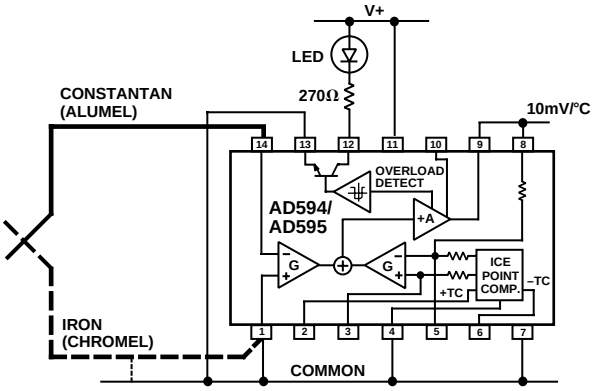

Figure 11. Alarm Directly Drives LED

A 270 Ω series resistor will limit current in the LED to 10 mA, but may be omitted since the alarm output transistor is current limited at about 20 mA. The transistor, however, will operate in a high dissipation mode and the temperature of the circuit will rise well above ambient. Note that the cold junction compensation will be affected whenever the alarm circuit is activated. The time required for the chip to return to ambient temperature will depend on the power dissipation of the alarm circuit, the nature of the thermal path to the environment and the alarm duration.

The alarm can be used with both single and dual supplies. It can be operated above or below ground. The collector and emitter of the output transistor can be used in any normal switch configuration. As an example a negative referenced load can be driven from –ALM as shown in Figure 12.

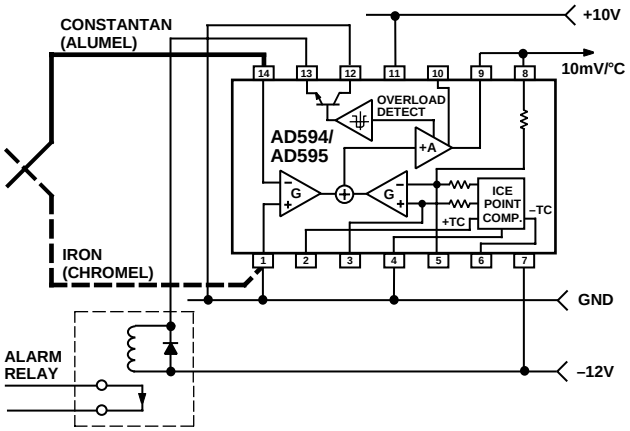

Figure 12. –ALM Driving A Negative Referenced Load

The collector (+ALM) should not be allowed to become more positive than (V–) +36 V, however, it may be permitted to be more positive than V+. The emitter voltage (–ALM) should be constrained so that it does not become more positive than 4 volts below the V+ applied to the circuit.

Additionally, the AD594/AD595 can be configured to produce an extreme upscale or downscale output in applications where an extra signal line for an alarm is inappropriate. By tying either of the thermocouple inputs to common most runaway control conditions can be automatically avoided. A +IN to common connection creates a downscale output if the thermocouple opens, while connecting –IN to common provides an upscale output.

CELSIUS THERMOMETER

The AD594/AD595 may be configured as a stand-alone Celsius thermometer as shown in Figure 13.

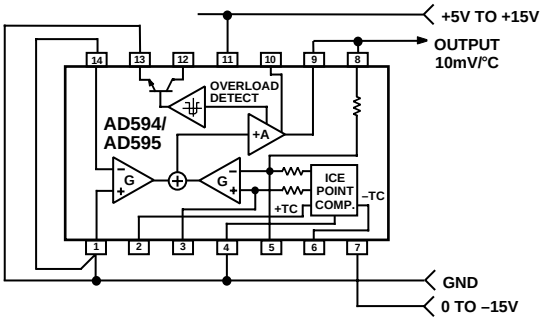

Figure 13. AD594/AD595 as a Stand-Alone Celsius Thermometer

Simply omit the thermocouple and connect the inputs (Pins 1 and 14) to common. The output now will reflect the compensation voltage and hence will indicate the AD594/AD595 temperature with a scale factor of 10 mV/°C. In this three terminal, voltage output, temperature sensing mode, the AD594/AD595 will operate over the full military –55°C to +125°C temperature range.

THERMOCOUPLE BASICS

Thermocouples are economical and rugged; they have reasonably good long-term stability. Because of their small size, they respond quickly and are good choices where fast response is important. They function over temperature ranges from cryogenics to jet-engine exhaust and have reasonable linearity and accuracy.

Because the number of free electrons in a piece of metal depends on both temperature and composition of the metal, two pieces of dissimilar metal in isothermal and contact will exhibit a potential difference that is a repeatable function of temperature, as shown in Figure 14. The resulting voltage depends on the temperatures, T1 and T2, in a repeatable way.

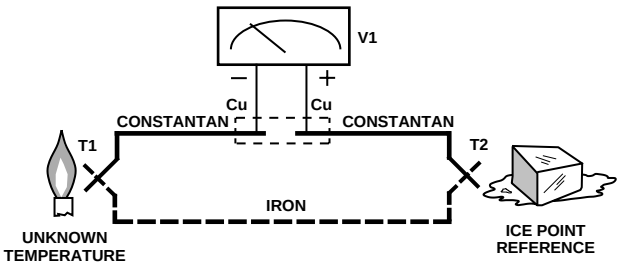

Figure 14. Thermocouple Voltage with 0°C Reference

Since the thermocouple is basically a differential rather than absolute measuring device, a know reference temperature is required for one of the junctions if the temperature of the other is to be inferred from the output voltage. Thermocouples made of specially selected materials have been exhaustively characterized in terms of voltage versus temperature compared to primary temperature standards. Most notably the water-ice point of 0°C is used for tables of standard thermocouple performance.

An alternative measurement technique, illustrated in Figure 15, is used in most practical applications where accuracy requirements do not warrant maintenance of primary standards. The reference junction temperature is allowed to change with the environment of the measurement system, but it is carefully measured by some type of absolute thermometer. A measurement of the thermocouple voltage combined with a knowledge of the reference temperature can be used to calculate the measurement junction temperature. Usual practice, however, is to use a convenient thermoelectric method to measure the reference temperature and to arrange its output voltage so that it corresponds to a thermocouple referred to 0°C. This voltage is simply added to the thermocouple voltage and the sum then corresponds to the standard voltage tabulated for an ice-point referenced thermocouple.

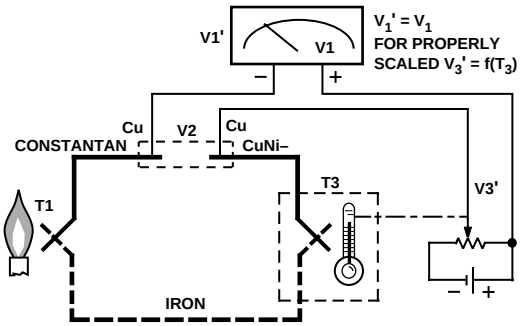

Figure 15. Substitution of Measured Reference Temperature for Ice Point Reference

The temperature sensitivity of silicon integrated circuit transistors is quite predictable and repeatable. This sensitivity is exploited in the AD594/AD595 to produce a temperature related voltage to compensate the reference of "cold" junction of a thermocouple as shown in Figure 16.

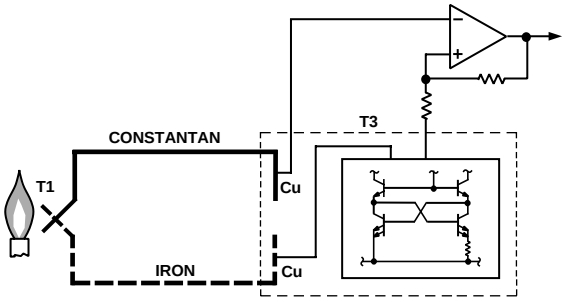

Figure 16. Connecting Isothermal Junctions

Since the compensation is at the reference junction temperature, it is often convenient to form the reference "junction" by connecting directly to the circuit wiring. So long as these connections and the compensation are at the same temperature no error will result.

OUTLINE DIMENSIONS

Dimensions shown in inches and (mm).

TO-116 (D) Package

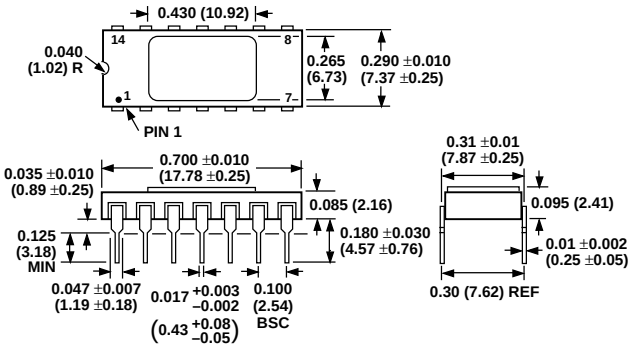

Cerdip (Q) Package

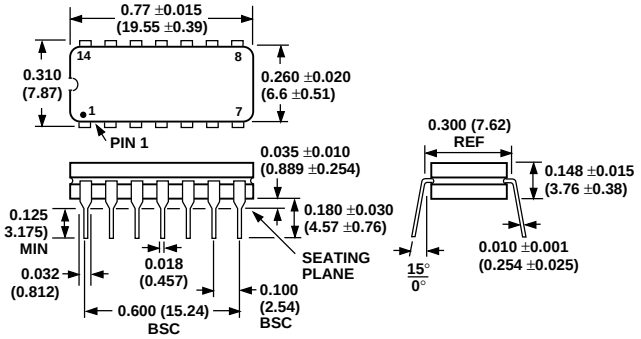

C731g–0–11/99

PRINTED IN U.S.A.

OCEAN CHIPS
Океан Электроники
Поставка электронных компонентов

Компания «Океан Электроники» предлагает заключение долгосрочных отношений при поставках импортных электронных компонентов на взаимовыгодных условиях!

Наши преимущества:

- Поставка оригинальных импортных электронных компонентов напрямую с производств Америки, Европы и Азии, а так же с крупнейших складов мира;
- Широкая линейка поставок активных и пассивных импортных электронных компонентов (более 30 млн. наименований);
- Поставка сложных, дефицитных, либо снятых с производства позиций;
- Оперативные сроки поставки под заказ (от 5 рабочих дней);
- Экспресс доставка в любую точку России;
- Помощь Конструкторского Отдела и консультации квалифицированных инженеров;
- Техническая поддержка проекта, помощь в подборе аналогов, поставка прототипов;
- Поставка электронных компонентов под контролем ВП;
- Система менеджмента качества сертифицирована по Международному стандарту ISO 9001;
- При необходимости вся продукция военного и аэрокосмического назначения проходит испытания и сертификацию в лаборатории (по согласованию с заказчиком);
- Поставка специализированных компонентов военного и аэрокосмического уровня качества (Xilinx, Altera, Analog Devices, Intersil, Interpoint, Microsemi, Actel, Aeroflex, Peregrine, VPT, Syfer, Eurofarad, Texas Instruments, MS Kennedy, Miteq, Cobham, E2V, MA-COM, Hittite, Mini-Circuits, General Dynamics и др.);

Компания «Океан Электроники» является официальным дистрибьютором и эксклюзивным представителем в России одного из крупнейших производителей разъемов военного и аэрокосмического назначения **«JONHON»**, а так же официальным дистрибьютором и эксклюзивным представителем в России производителя высокотехнологичных и надежных решений для передачи СВЧ сигналов **«FORSTAR»**.

AVIC JONHON

«JONHON» (основан в 1970 г.)

Разъемы специального, военного и аэрокосмического назначения:

(Применяются в военной, авиационной, аэрокосмической, морской, железнодорожной, горно- и нефтедобывающей отраслях промышленности)

«FORSTAR» (основан в 1998 г.)

ВЧ соединители, коаксиальные кабели, кабельные сборки и микроволновые компоненты:

(Применяются в телекоммуникациях гражданского и специального назначения, в средствах связи, РЛС, а так же военной, авиационной и аэрокосмической отраслях промышленности).

FORSTAR®

Телефон: 8 (812) 309-75-97 (многоканальный)
Факс: 8 (812) 320-03-32
Электронная почта: ocean@oceanchips.ru
Web: http://oceanchips.ru/
Адрес: 198099, г. Санкт-Петербург, ул. Калинина, д. 2, корп. 4, лит. А