L6561

POWER FACTOR CORRECTOR

1 FEATURES

- VERY PRECISE ADJUSTABLE OUTPUT OVERVOLTAGE PROTECTION
- MICRO POWER START-UP CURRENT (50µA TYP.)
- VERY LOW OPERATING SUPPLY CURRENT(4mA TYP.)
- INTERNAL START-UP TIMER
- CURRENT SENSE FILTER ON CHIP
- DISABLE FUNCTION
- 1% PRECISION (@ T_j = 25°C) INTERNAL REFERENCE VOLTAGE
- TRANSITION MODE OPERATION
- TOTEM POLE OUTPUT CURRENT: ±400mA
- DIP-8/SO-8 PACKAGES

2 DESCRIPTION

L6561 is the improved version of the L6560 standard Power Factor Corrector. Fully compatible with the standard version, it has a superior performant multiplier making the device capable of working in wide input voltage range applications (from 85V to 265V) with an excellent THD. Furthermore the start up current has been reduced at few tens of mA and a disable function has been implemented on the ZCD pin, guaranteeing lower current consumption in stand by mode.

Figure 1. Packages

DIP-8 SO-8

Table 1. Order Codes

Part Number	Package
L6561	DIP-8
L6561D	SO-8
L6561D013TR	Tape & Reel

Realised in mixed BCD technology, the chip gives the following benefits:

- micro power start up current
- 1% precision internal reference voltage
- (Tj = 25°C)
- Soft Output Over Voltage Protection
- no need for external low pass filter on the current sense
- very low operating quiescent current minimises power dissipation

The totem pole output stage is capable of driving a Power MOS or IGBT with source and sink currents of ±400mA. The device is operating in transition mode and it is optimised for Electronic Lamp Ballast application, AC-DC adaptors and SMPS.

Figure 2. Block Diagram

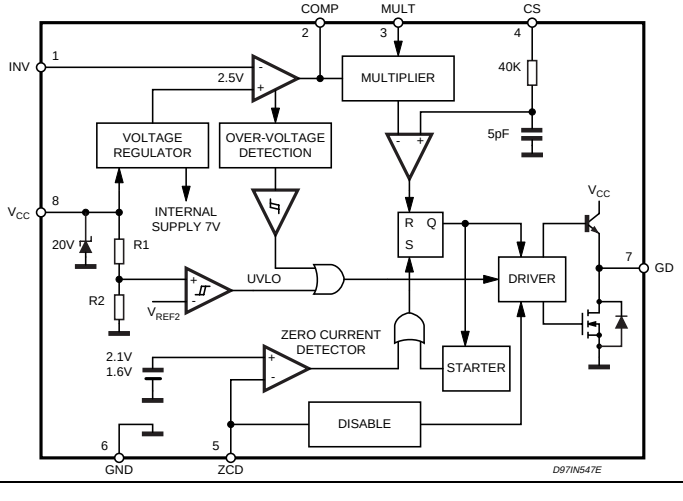

Table 2. Absolute Maximum Ratings

Symbol	Pin	Parameter	Value	Unit
I_{Vcc}	8	$I_q + I_Z$; ($I_{GD} = 0$)	30	mA
I_{GD}	7	Output Totem Pole Peak Current (2µs)	±700	mA
INV, COMP MULT	1, 2, 3	Analog Inputs & Outputs	-0.3 to 7	V
CS	4	Current Sense Input	-0.3 to 7	V
ZCD	5	Zero Current Detector	50 (source) -10 (sink)	mA mA
P_{tot}		Power Dissipation @T_{amb} = 50 °C (DIP-8) (SO-8)	1 0.65	W W
T_j		Junction Temperature Operating Range	-40 to 150	°C
T_{stg}		Storage Temperature	-55 to 150	°C

Figure 3. Pin Connection (Top view)

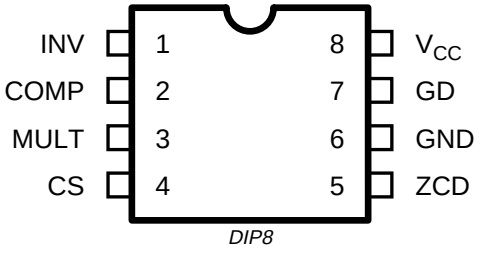

Table 3. Thermal Data

Symbol	Parameter	SO 8	MINIDIP	Unit
$R_{th\ j\text{-}amb}$	Thermal Resistance Junction to ambient	150	100	°C/W

Table 4. Pin Description

N.	Name	Function
1	INV	Inverting input of the error amplifier. A resistive divider is connected between the output regulated voltage and this point, to provide voltage feedback.
2	COMP	Output of error amplifier. A feedback compensation network is placed between this pin and the INV pin.
3	MULT	Input of the multiplier stage. A resistive divider connects to this pin the rectified mains. A voltage signal, proportional to the rectified mains, appears on this pin.
4	CS	Input to the comparator of the control loop. The current is sensed by a resistor and the resulting voltage is applied to this pin.
5	ZCD	Zero current detection input. If it is connected to GND, the device is disabled.
6	GND	Current return for driver and control circuits.
7	GD	Gate driver output. A push pull output stage is able to drive the Power MOS with peak current of 400mA (source and sink).
8	V_{CC}	Supply voltage of driver and control circuits.

(1) Parameter guaranteed by design, not tested in production.

Table 5. Electrical Characteristics
(V_{CC} = 14.5V; T_{amb} = -25°C to 125°C;unless otherwise specified)

Symbol	Pin	Parameter	Test Condition	Min.	Typ.	Max.	Unit
SUPPLY VOLTAGE SECTION							
V_{CC}	8	Operating Range	after turn-on	11		18	V
$V_{CC\ ON}$	8	Turn-on Threshold		11	12	13	V
$V_{CC\ OFF}$	8	Turn-off Threshold		8.7	9.5	10.3	V
Hys	8	Hysteresis		2.2	2.5	2.8	V
SUPPLY CURRENT SECTION							
$I_{START-U}$	8	Start-up Current	before turn-on (V_{CC} =11V)	20	50	90	µA
I_q	8	Quiescent Current			2.6	4	mA
I_{CC}	8	Operating Supply Current	C_L = 1nF @ 70KHz		4	5.5	mA
			in OVP condition V_{pin1} = 2.7V		1.4	2.1	mA
Iq	8	Quiescent Current	V_{PIN5} ≤150mV, $V_{CC} > V_{CC\ off}$		1.4	2.1	mA
	8		V_{PIN5} ≤ 150mV, $V_{CC} < V_{CC\ off}$	20	50	90	µA
V_Z	8	Zener Voltage	I_{CC} = 25mA	18	20	22	V
ERROR AMPLIFIER SECTION							
V_{INV}	1	Voltage Feedback Input Threshold	T_{amb} = 25°C	2.465	2.5	2.535	V
			12V < V_{CC} < 18V	2.44		2.56	V
		Line Regulation	V_{CC} = 12 to 18V		2	5	mV
I_{INV}	1	Input Bias Current			-0.1	-1	µA
G_V		Voltage Gain	Open loop	60	80		dB
GB		Gain Bandwidth			1		MHz
I_{COMP}	2	Source Current	V_{COMP} = 4V, V_{INV} = 2.4V	-2	-4	-8	mA
		Sink Current	V_{COMP} = 4V, V_{INV} = 2.6V	2.5	4.5		mA
V_{COMP}	2	Upper Clamp Voltage	I_{SOURCE} = 0.5mA		5.8		V
		Lower Clamp Voltage	I_{Sink} = 0.5mA		2.25		V
MULTIPLIER SECTION							
V_{MULT}	3	Linear Operating Voltage		0 to 3	0 to 3.5		V
$\frac{\Delta V_{CS}}{\Delta V_{mult}}$		Output Max. Slope	V_{MULT} = from 0V to 0.5V V_{COMP} = Upper Clamp Voltage	1.65	1.9		
K		Gain	V_{MULT} = 1V V_{COMP} = 4V	0.45	0.6	0.75	1/V
CURRENT SENSE COMPARATOR							
V_{CS}	4	Current Sense Reference Clamp	V_{MULT} = 2.5V V_{COMP} = Upper Clamp Voltage	1.6	1.7	1.8	V
I_{CS}	4	Input Bias Current	V_{OS} = 0		-0.05	-1	µA
$t_{d\ (H-L)}$	4	Delay to Output			200	450	ns
	4	Current Sense Offset			0	15	mV
ZERO CURRENT DETECTOR							
V_{ZCD}	5	Input Threshold Voltage Rising Edge	(1)		2.1		V
		Hysteresis	(1)	0.3	0.5	0.7	V
V_{ZCD}	5	Upper Clamp Voltage	I_{ZCD} = 20µA	4.5	5.1	5.9	V
V_{ZCD}	5	Upper Clamp Voltage	I_{ZCD} = 3mA	4.7	5.2	6.1	V

Table 5. Electrical Characteristics (continued)
(V_{CC} = 14.5V; T_{amb} = -25°C to 125°C;unless otherwise specified)

Symbol	Pin	Parameter	Test Condition	Min.	Typ.	Max.	Unit
V_{ZCD}	5	Lower Clamp Voltage	I_{ZCD} = -3mA	0.3	0.65	1	V
I_{ZCD}	5	Sink Bias Current	1V ≤ V_{ZCD} ≤ 4.5V		2		µA
I_{ZCD}	5	Source Current Capability		-3		-10	mA
I_{ZCD}	5	Sink Current Capability		3		10	mA
V_{DIS}	5	Disable threshold		150	200	250	mV
I_{ZCD}	5	Restart Current After Disable	V_{ZCD} < V_{dis}; V_{CC} > V_{CCOFF}	-100	-200	-300	µA
OUTPUT SECTION							
V_{GD}	7	Dropout Voltage	$I_{GDsource}$ = 200mA		1.2	2	V
			$I_{GDsource}$ = 20mA		0.7	1	V
			I_{GDsink} = 200mA			1.5	V
			I_{GDsink} = 20mA			0.3	V
t_r	7	Output Voltage Rise Time	C_L = 1nF		40	100	ns
t_f	7	Output Voltage Fall Time	C_L = 1nF		40	100	ns
$I_{GD\ off}$	7	IGD Sink Current	V_{CC} =3.5V V_{GD} = 1V	5	10	-	mA
OUTPUT OVERVOLTAGE SECTION							
I_{OVP}	2	OVP Triggering Current		35	40	45	µA
		Static OVP Threshold		2.1	2.25	2.4	V
RESTART TIMER							
t_{START}		Start Timer		70	150	400	µs

3 OVER VOLTAGE PROTECTION OVP

The output voltage is expected to be kept by the operation of the PFC circuit close to its nominal value. This is set by the ratio of the two external resistors R1 and R2 (see fig. 5), taking into consideration that the non inverting input of the error amplifier is biased inside the L6561 at 2.5V.

In steady state conditions, the current through R1 and R2 is:

$$I_{R1sc} = \frac{V_{out} - 2.5}{R1} = I_{R2} = \frac{2.5V}{R2}$$

and, if the external compensation network is made only with a capacitor C_{comp}, the current through C_{comp} equals zero.When the output voltage increases abruptly the current through R1 becomes:

$$I_{R1} = \frac{V_{outsc} + \Delta V_{out} - 2.5}{R1} = I_{R1sc} + \Delta I_{R1}$$

Since the current through R2 does not change, ΔI_{R1} must flow through the capacitor C_{comp} and enter the error amplifier.

This current is monitored inside the L6561 and when reaches about 37µA the output voltage of the multiplier is forced to decrease, thus reducing the energy drawn from the mains. If the current exceeds 40µA, the OVP protection is triggered (Dynamic OVP), and the external power transistor is switched off until the current falls approximately below 10µA.

However, if the overvoltage persists, an internal comparator (Static OVP) confirms the OVP condition keeping the external power switch turned off (see fig. 4).Finally, the overvoltage that triggers the OVP function is:

$$\Delta V_{out} = R_1 \cdot 40\mu A.$$

Typical values for R_1, R_2 and C are shown in the application circuits. The overvoltage can be set indepen-

dently from the average output voltage. The precision in setting the overvoltage threshold is 7% of the overvoltage value (for instance ΔV = 60V ± 4.2V).

3.1 Disable function

The zero current detector (ZCD) pin can be used for device disabling as well. By grounding the ZCD voltage the device is disabled reducing the supply current consumption at 1.4mA typical (@ 14.5V supply voltage).

Releasing the ZCD pin the internal start-up timer will restart the device.

Figure 4.

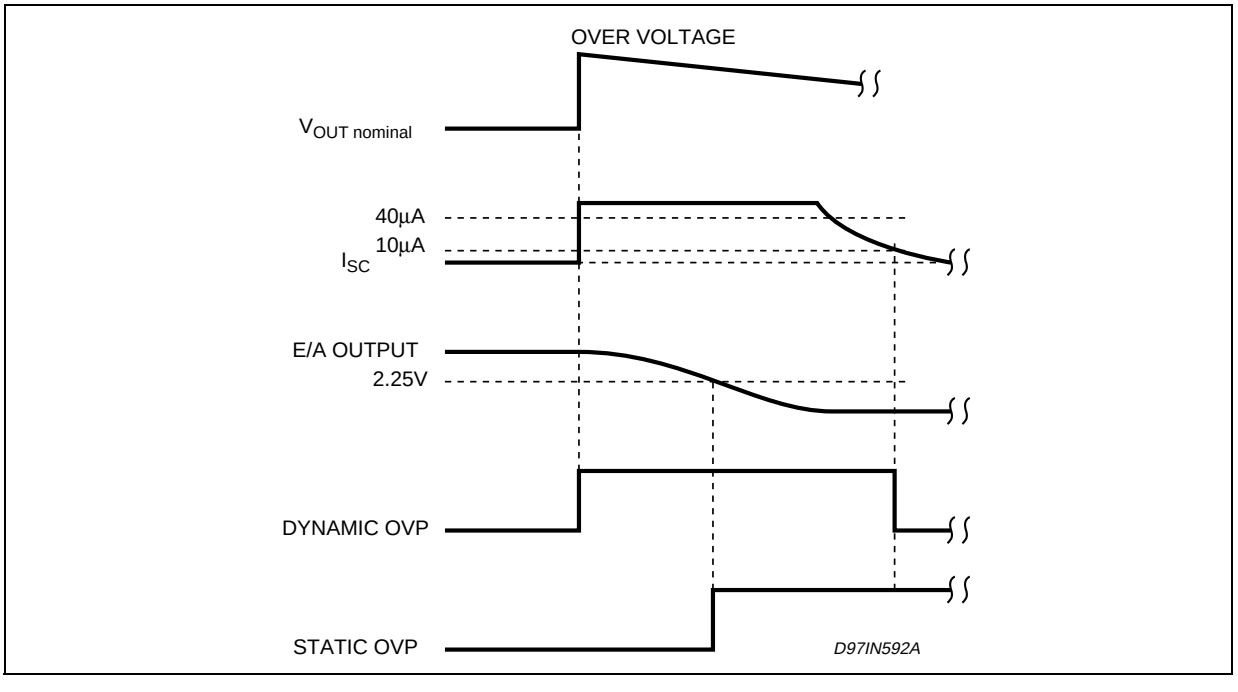

Figure 5. Overvoltage Protection Circuit

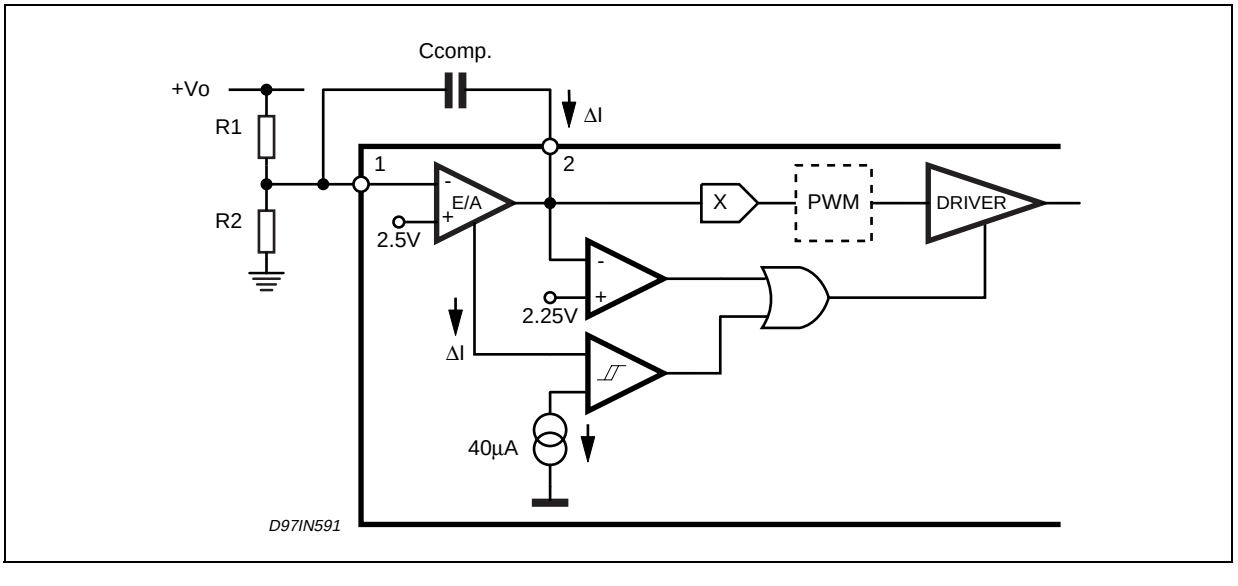

Figure 6. Typical Application Circuit (80W, 110VAC)

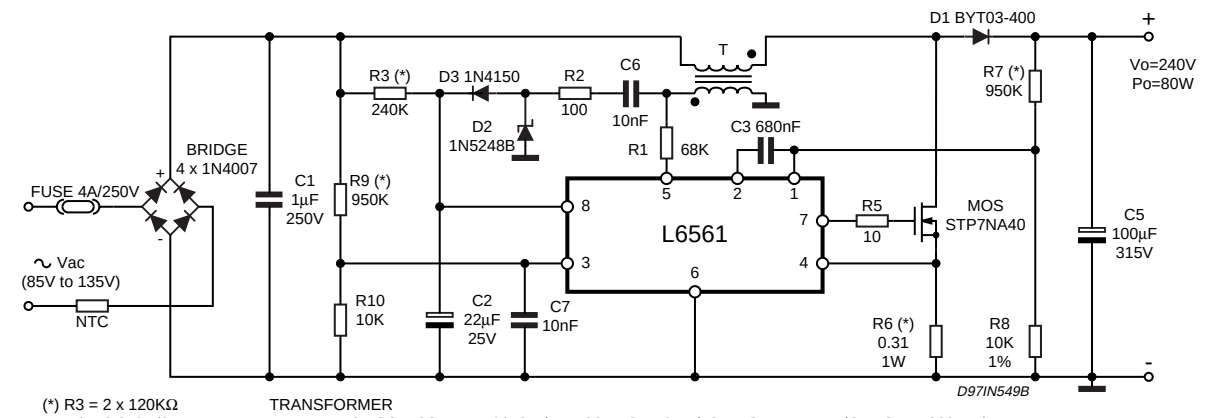

(*) R3 = 2 x 120KΩ
R6 = 0.619Ω/2
R7 = 2 x 475KΩ, 1%
R9 = 2 x 475KΩ

TRANSFORMER
T: core THOMSON-CSF B1ET2910A (ETD 29 x 16 x 10mm) OR EQUIVALENT (OREGA 473201A7)
primary 90T of Litz wire 10 x 0.2mm
secondary 11T of #27 AWG (0.15mm)
gap 1.8mm for a total primary inductance of 0.7mH

Figure 7. Typical Application Circuit (120W, 220VAC)

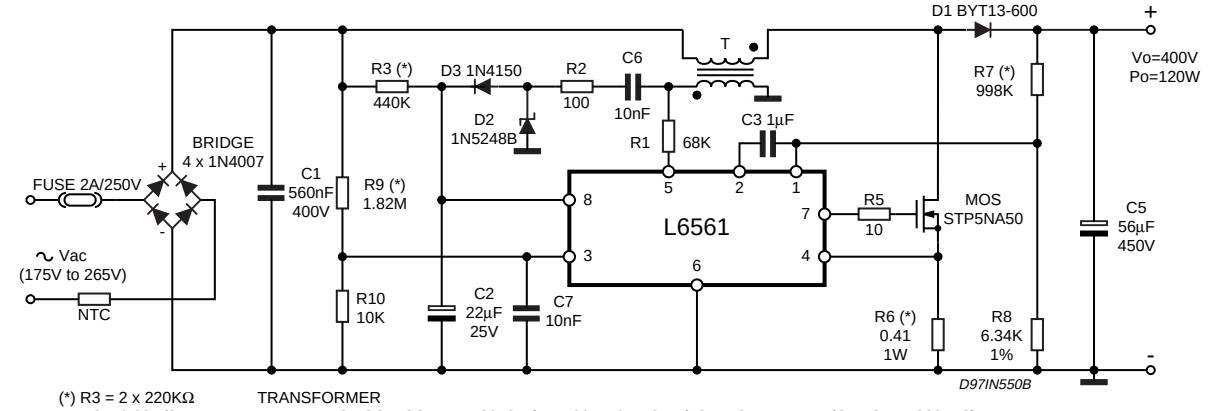

(*) R3 = 2 x 220KΩ
R6 = 0.82Ω/2
R7 = 2 x 499KΩ, 1%
R9 = 2 x 909KΩ

TRANSFORMER
T: core THOMSON-CSF B1ET2910A (ETD 29 x 16 x 10mm) OR EQUIVALENT (OREGA 473201A8)
primary 90T of Litz wire 10 x 0.2mm
secondary 7T of #27 AWG (0.15mm)
gap 1.25mm for a total primary inductance of 0.8mH

Figure 8. Typical Application Circuit (80W, Wide-range Mains)

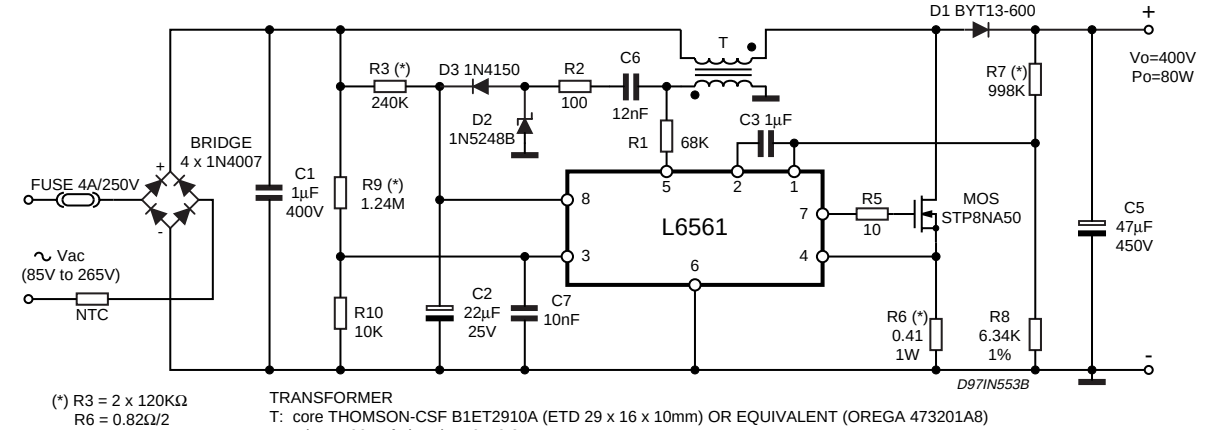

(*) R3 = 2 x 120KΩ
R6 = 0.82Ω/2
R7 = 2 x 499KΩ, 1%
R9 = 2 x 620KΩ

TRANSFORMER
T: core THOMSON-CSF B1ET2910A (ETD 29 x 16 x 10mm) OR EQUIVALENT (OREGA 473201A8)
primary 90T of Litz wire 10 x 0.2mm
secondary 7T of #27 AWG (0.15mm)
gap 1.25mm for a total primary inductance of 0.8mH

Figure 9. Demo Board (EVAL6561-80) Electrical Schematic

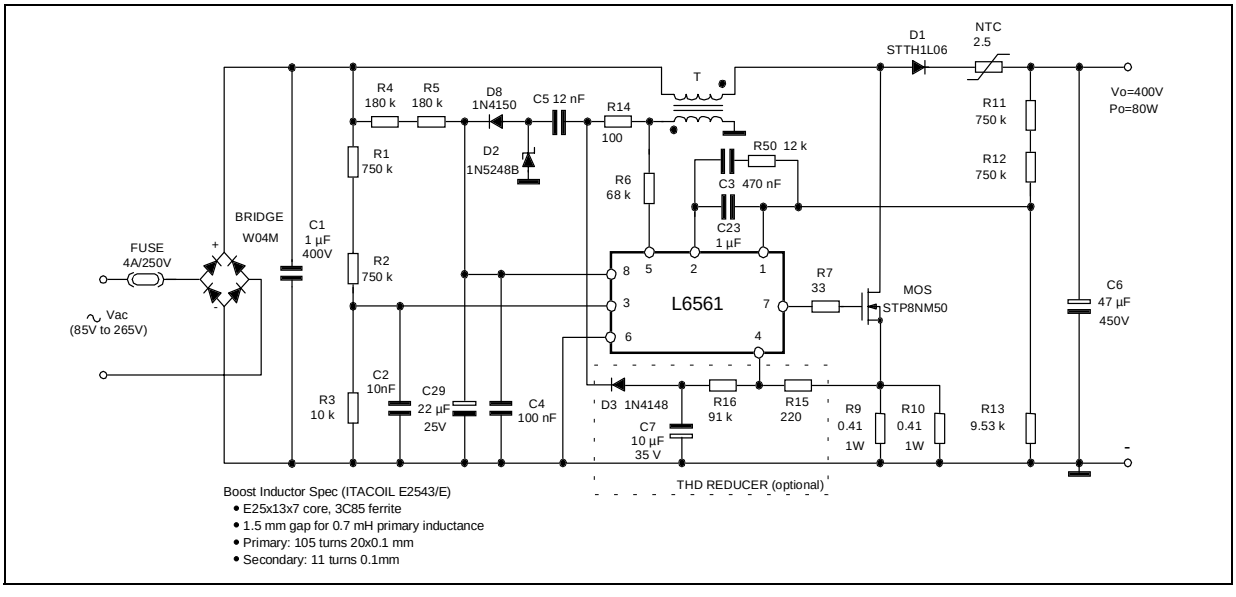

Figure 10. EVAL6561-80: PCB and Component Layout (Top view, real size 57x108mm)

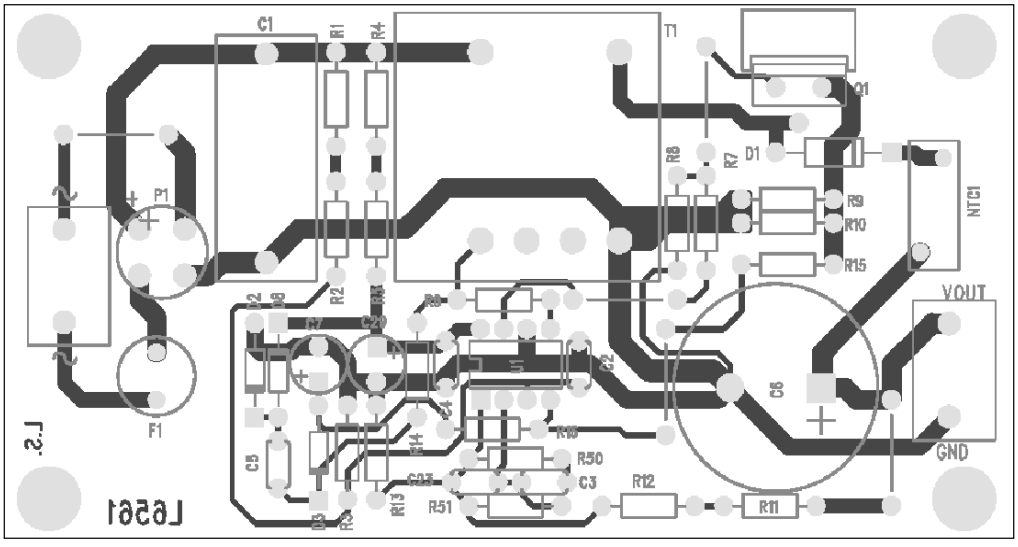

Table 6. EVAL6561-80: Evaluation Results.

V_{in} (Vac)	Pin (W)	V_o (Vdc)	ΔVo (Vdc)	Po (W)	η (%)	w/o THD reducer		with THD reducer	
						PF	THD (%)	PF	THD (%)
85	87.2	400.1	14	80.7	92.8	0.999	3.7	0.999	2.9
110	85.2	400.1	14	80.7	94.7	0.996	5.0	0.996	3.2
135	84.2	400.1	14	80.7	95.8	0.989	6.2	0.989	3.7
175	83.5	400.1	14	80.7	96.6	0.976	8.3	0.976	4.3
220	83.1	400.1	14	80.7	97.1	0.940	10.7	0.941	5.6
265	82.9	400.1	14	80.7	97.3	0.890	13.7	0.893	8.1

Figure 11. OVP Current Threshold vs. Temperature

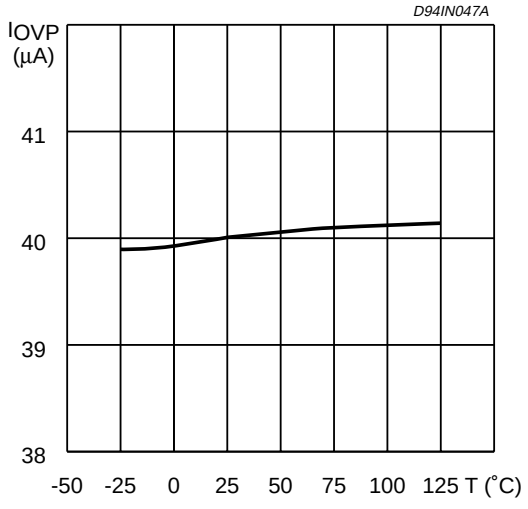

Figure 13. Supply Current vs. Supply Voltage

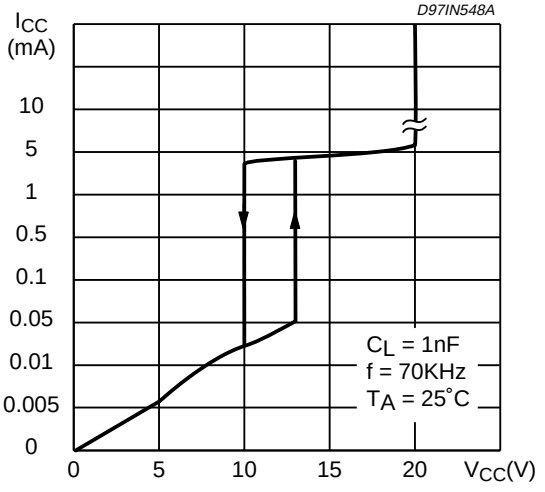

Figure 12. Undervoltage Lockout Threshold vs. Temperature

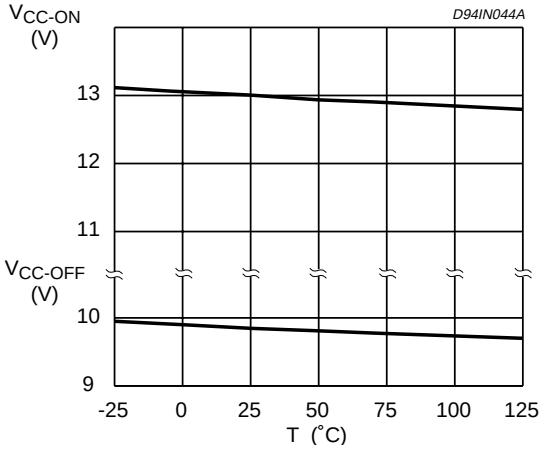

Figure 14. Voltage Feedback Input Threshold vs. Temperature

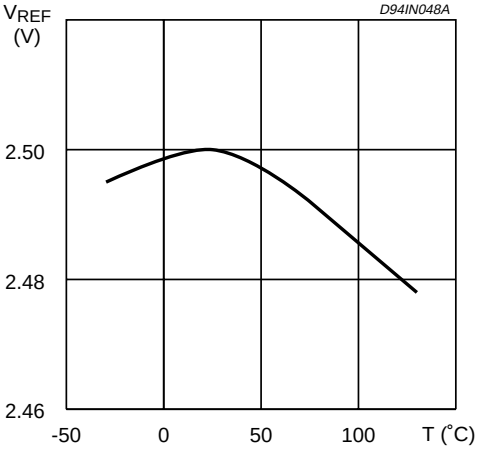

Figure 15. Output Saturation Voltage vs. Sink Current

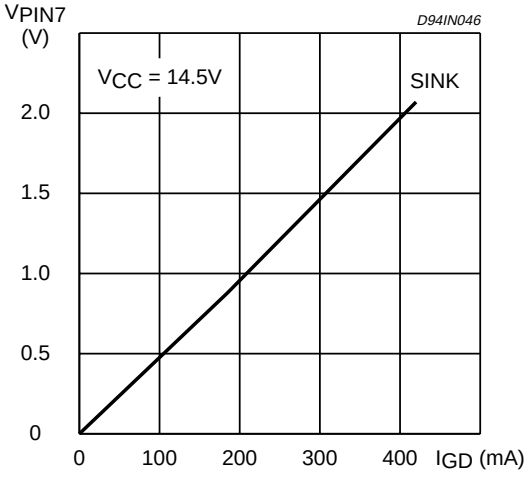

Figure 17. Multiplier Characteristics Family

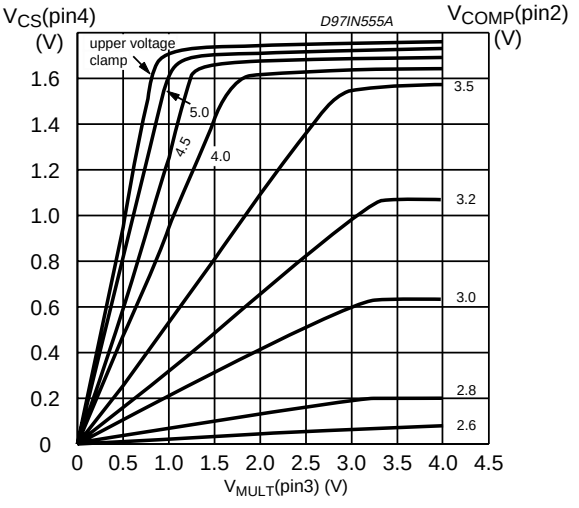

Figure 16. Output Saturation Voltage vs. Source Current

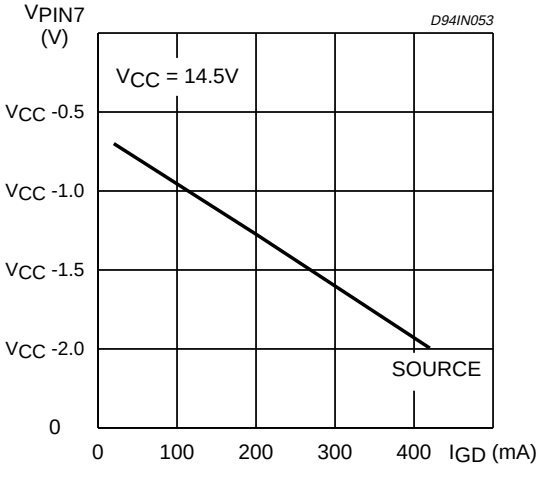

Figure 18. DIP-8 Mechanical Data & Package Dimensions

DIM.	mm			inch		
	MIN.	TYP.	MAX.	MIN.	TYP.	MAX.
A		3.32			0.131	
a1	0.51			0.020		
B	1.15		1.65	0.045		0.065
b	0.356		0.55	0.014		0.022
b1	0.204		0.304	0.008		0.012
D			10.92			0.430
E	7.95		9.75	0.313		0.384
e		2.54			0.100	
e3		7.62			0.300	
e4		7.62			0.300	
F			6.6			0.260
I			5.08			0.200
L	3.18		3.81	0.125		0.150
Z			1.52			0.060

OUTLINE AND MECHANICAL DATA

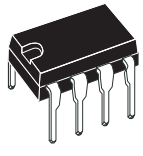

DIP-8

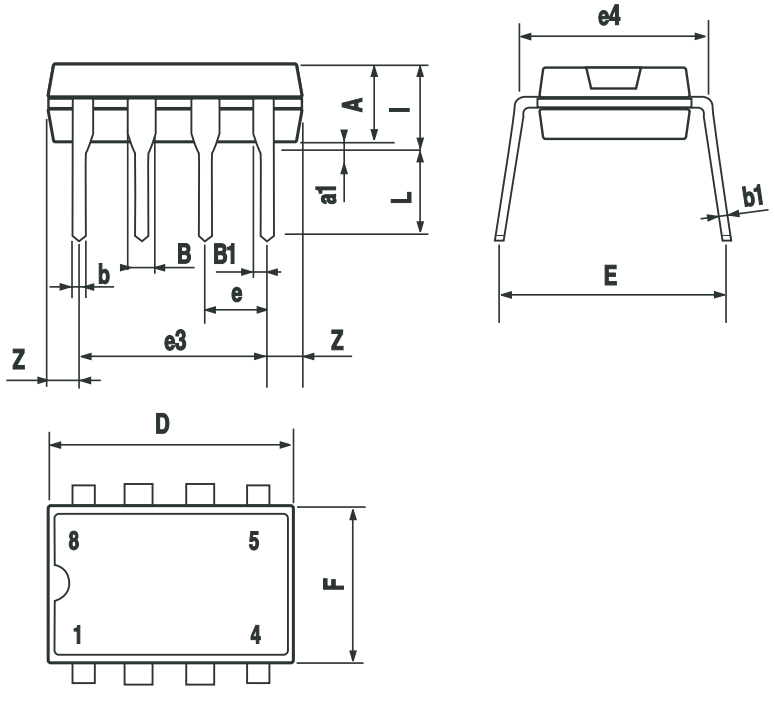

Figure 19. SO-8 Mechanical Data & Package Dimensions

DIM.	mm			inch		
	MIN.	TYP.	MAX.	MIN.	TYP.	MAX.
A	1.35		1.75	0.053		0.069
A1	0.10		0.25	0.004		0.010
A2	1.10		1.65	0.043		0.065
B	0.33		0.51	0.013		0.020
C	0.19		0.25	0.007		0.010
D (1)	4.80		5.00	0.189		0.197
E	3.80		4.00	0.15		0.157
e		1.27			0.050	
H	5.80		6.20	0.228		0.244
h	0.25		0.50	0.010		0.020
L	0.40		1.27	0.016		0.050
k	0° (min.), 8° (max.)					
ddd			0.10			0.004

Note: (1) Dimensions D does not include mold flash, protrusions or gate burrs.
Mold flash, potrusions or gate burrs shall not exceed 0.15mm (.006inch) in total (both side).

OUTLINE AND MECHANICAL DATA

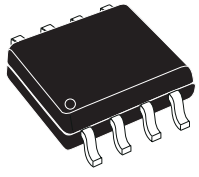

SO-8

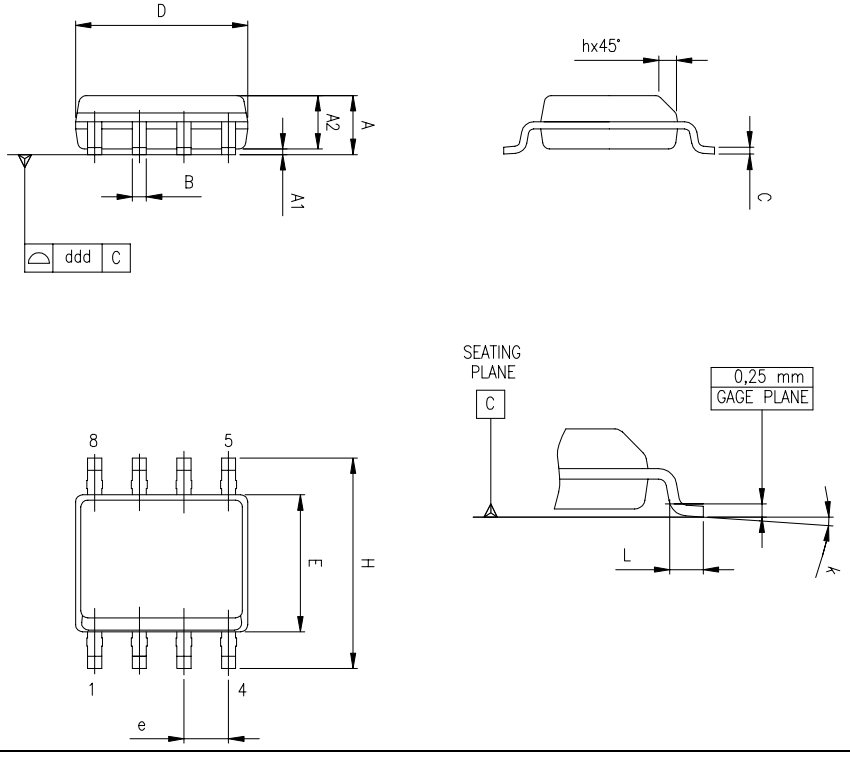

Table 7. Revision History

Date	Revision	Description of Changes
January 2004	15	First Issue
June 2004	16	Modified the Style-look in compliance with the “Corporate Technical Publications Design Guide”. Changed input of the power amplifier connected to Multiplier (Fig. 2).

Information furnished is believed to be accurate and reliable. However, STMicroelectronics assumes no responsibility for the consequences of use of such information nor for any infringement of patents or other rights of third parties which may result from its use. No license is granted by implication or otherwise under any patent or patent rights of STMicroelectronics. Specifications mentioned in this publication are subject to change without notice. This publication supersedes and replaces all information previously supplied. STMicroelectronics products are not authorized for use as critical components in life support devices or systems without express written approval of STMicroelectronics.

The ST logo is a registered trademark of STMicroelectronics.
All other names are the property of their respective owners

© 2004 STMicroelectronics - All rights reserved

STMicroelectronics GROUP OF COMPANIES
Australia - Belgium - Brazil - Canada - China - Czech Republic - Finland - France - Germany - Hong Kong - India - Israel - Italy - Japan - Malaysia - Malta - Morocco - Singapore - Spain - Sweden - Switzerland - United Kingdom - United States
www.st.com

OCEAN CHIPS
Океан Электроники
Поставка электронных компонентов

Компания «Океан Электроники» предлагает заключение долгосрочных отношений при поставках импортных электронных компонентов на взаимовыгодных условиях!

Наши преимущества:

- Поставка оригинальных импортных электронных компонентов напрямую с производств Америки, Европы и Азии, а так же с крупнейших складов мира;
- Широкая линейка поставок активных и пассивных импортных электронных компонентов (более 30 млн. наименований);
- Поставка сложных, дефицитных, либо снятых с производства позиций;
- Оперативные сроки поставки под заказ (от 5 рабочих дней);
- Экспресс доставка в любую точку России;
- Помощь Конструкторского Отдела и консультации квалифицированных инженеров;
- Техническая поддержка проекта, помощь в подборе аналогов, поставка прототипов;
- Поставка электронных компонентов под контролем ВП;
- Система менеджмента качества сертифицирована по Международному стандарту ISO 9001;
- При необходимости вся продукция военного и аэрокосмического назначения проходит испытания и сертификацию в лаборатории (по согласованию с заказчиком);
- Поставка специализированных компонентов военного и аэрокосмического уровня качества (Xilinx, Altera, Analog Devices, Intersil, Interpoint, Microsemi, Actel, Aeroflex, Peregrine, VPT, Syfer, Eurofarad, Texas Instruments, MS Kennedy, Miteq, Cobham, E2V, MA-COM, Hittite, Mini-Circuits, General Dynamics и др.);

Компания «Океан Электроники» является официальным дистрибьютором и эксклюзивным представителем в России одного из крупнейших производителей разъемов военного и аэрокосмического назначения **«JONHON»**, а так же официальным дистрибьютором и эксклюзивным представителем в России производителя высокотехнологичных и надежных решений для передачи СВЧ сигналов **«FORSTAR»**.

AVIC JONHON

«JONHON» (основан в 1970 г.)

Разъемы специального, военного и аэрокосмического назначения:

(Применяются в военной, авиационной, аэрокосмической, морской, железнодорожной, горно- и нефтедобывающей отраслях промышленности)

«FORSTAR» (основан в 1998 г.)

ВЧ соединители, коаксиальные кабели, кабельные сборки и микроволновые компоненты:

(Применяются в телекоммуникациях гражданского и специального назначения, в средствах связи, РЛС, а так же военной, авиационной и аэрокосмической отраслях промышленности).

FORSTAR®

Телефон: 8 (812) 309-75-97 (многоканальный)
Факс: 8 (812) 320-03-32
Электронная почта: ocean@oceanchips.ru
Web: http://oceanchips.ru/
Адрес: 198099, г. Санкт-Петербург, ул. Калинина, д. 2, корп. 4, лит. А