TEXAS INSTRUMENTS
Data sheet acquired from Harris Semiconductor
SCHS083B – Revised March 2003

CD4536B Types

CMOS Programmable Timer

High-Voltage Types (20-Volt Rating)

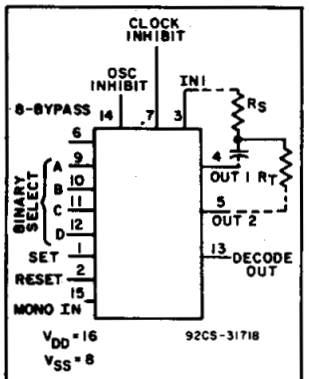

FUNCTIONAL DIAGRAM

■ CD4536B is a programmable timer consisting of 24 ripple-binary counter stages. The salient feature of this device is its flexibility. The device can count from 1 to 2^{24} or the first 8 stages can be bypassed to allow an output, selectable by a 4-bit code, from any one of the remaining 16 stages. It can be driven by an external clock or an RC oscillator that can be constructed using on-chip components. Input IN1 serves as either the external clock input or the input to the on-chip RC oscillator. OUT1 and OUT2 are connection terminals for the external RC components. In addition, an on-chip monostable circuit is provided to allow a variable pulse width output. Various timing functions can be achieved using combinations of these capabilities.

A logic 1 on the 8-BYPASS input enables a bypass of the first 8 stages and makes stage 9 the first counter stage of the last 16 stages. Selection of 1 of 16 outputs is accomplished by the decoder and the BCD inputs A, B, C and D. MONO IN is the timing input for the on-chip monostable oscillator. Grounding of the MONO IN terminal through a resistor of 10K ohms or higher, disables the one-shot circuit and connects the decoder directly to the DECODE OUT terminal. A resistor to V_{DD} and a capacitor to ground from the MONO IN terminal enables the one-shot circuit and controls its pulse width.

A fast test mode is enabled by a logic 1 on 8-BYPASS, SET, and RESET. This mode divides the 24-stage counter into three 8-stage sections to facilitate a fast test sequence.

The CD4536B types are supplied in 16-lead hermetic dual-in-line ceramic packages (F3A suffix), 16-lead dual-in-line plastic packages (E suffix), 16-lead small-outline packages (DW, DWR, and NSR suffixes), and 16-lead thin shrink small-outline packages (PW and PWR suffixes).

Features:

- **24 flip-flop stages — counts from 2^0 to 2^{24}**
- **Last 16 stages selectable by BCD select code**
- **Bypass input allows bypassing first 8 stages**
- **On-chip RC oscillator provision**
- **Clock inhibit input**
- **Schmitt-trigger in clock line permits operation with very long rise and fall times**
- **On-chip monostable output provision**
- **Typical f_{CL} = 3 MHz at V_{DD} = 10 V**
- **Test mode allows fast test sequence**
- **Set and reset inputs**
- **Capable of driving two low power TTL loads, one lower-power Schottky load, or two HTL loads over the rated temperature range**
- **Standardized, symmetrical output characteristics**
- **100% tested for quiescent current at 20 V**
- **5-V, 10-V, and 15-V parametric ratings**
- **Meets all requirements of JEDEC Tentative Standard No. 13B, "Standard Specifications for Description of 'B' Series CMOS Devices"**

RECOMMENDED OPERATING CONDITIONS

For maximum reliability, nominal operating conditions should be selected so that operation is always within the following ranges:

CHARACTERISTIC	LIMITS		UNITS
	Min.	Max.	
Supply-Voltage Range (For T_A = Full Package Temperature Range)	3	18	V

DECODE OUT SELECTION TABLE

D	C	B	A	NUMBER OF STAGES IN DIVIDER CHAIN	
				8-BYPASS = 0	8-BYPASS = 1
0	0	0	0	9	1
0	0	0	1	10	2
0	0	1	0	11	3
0	0	1	1	12	4
0	1	0	0	13	5
0	1	0	1	14	6
0	1	1	0	15	7
0	1	1	1	16	8
1	0	0	0	17	9
1	0	0	1	18	10
1	0	1	0	19	11
1	0	1	1	20	12
1	1	0	0	21	13
1	1	0	1	22	14
1	1	1	0	23	15
1	1	1	1	24	16

0 = Low Level 1 = High Level

MAXIMUM RATINGS, *Absolute-Maximum Values:*

DC SUPPLY-VOLTAGE RANGE, (V_{DD})
Voltages referenced to V_{SS} Terminal) ..... -0.5V to +20V
INPUT VOLTAGE RANGE, ALL INPUTS ..... -0.5V to V_{DD} +0.5V
DC INPUT CURRENT, ANY ONE INPUT ..... ±10mA
POWER DISSIPATION PER PACKAGE (P_D):
For T_A = -55°C to +100°C 500mW
For T_A = +100°C to +125°C ..... Derate Linearity at 12mW/°C to 200mW
DEVICE DISSIPATION PER OUTPUT TRANSISTOR
FOR T_A = FULL PACKAGE-TEMPERATURE RANGE (All Package Types)..... 100mW
OPERATING-TEMPERATURE RANGE (T_A) ..... -55°C to +125°C
STORAGE TEMPERATURE RANGE (T_{stg}) ..... -65°C to +150°C
LEAD TEMPERATURE (DURING SOLDERING):
At distance 1/16 ± 1/32 inch (1.59 ± 0.79mm) from case for 10s max ..... +265°C

Copyright © 2003, Texas Instruments Incorporated

STATIC ELECTRICAL CHARACTERISTICS

CHARACTERISTIC	CONDITIONS			LIMITS AT INDICATED TEMPERATURES (°C)							UNITS
	V_O (V)	V_{IN} (V)	V_{DD} (V)	−55	−40	+85	+125	+25 Min.	+25 Typ.	+25 Max.	
Quiescent Device Current, I_{DD} Max.	–	0,5	5	5	5	150	150	–	0.04	5	μA
	–	0,10	10	10	10	300	300	–	0.04	10	
	–	0,15	15	20	20	600	600	–	0.04	20	
	–	0,20	20	100	100	3000	3000	–	0.08	100	
Output Low (Sink) Current I_{OL} Min.	0.4	0,5	5	0.64	0.61	0.42	0.36	0.51	1	–	mA
	0.5	0,10	10	1.6	1.5	1.1	0.9	1.3	2.6	–	
	1.5	0,15	15	4.2	4	2.8	2.4	3.4	6.8	–	
Output High (Source) Current, I_{OH} Min.	4.6	0,5	5	−0.64	−0.61	−0.42	−0.36	−0.51	−1	–	
	2.5	0,5	5	−2	−1.8	−1.3	−1.15	−1.6	−3.2	–	
	9.5	0,10	10	−1.6	−1.5	−1.1	−0.9	−1.3	−2.6	–	
	13.5	0,15	15	−4.2	−4	−2.8	−2.4	−3.4	−6.8	–	
Output Voltage: Low-Level, V_{OL} Max.	–	0,5	5	0.05				–	0	0.05	V
	–	0,10	10	0.05				–	0	0.05	
	–	0,15	15	0.05				–	0	0.05	
Output Voltage: High-Level, V_{OH} Min.	–	0,5	5	4.95				4.95	5	–	
	–	0,10	10	9.95				9.95	10	–	
	–	0,15	15	14.95				14.95	15	–	
Input Low Voltage V_{IL} Max.	0.5,4.5	–	5	1.5				–	–	1.5	V
	1,9	–	10	3				–	–	3	
	1.5,13.5	–	15	4				–	–	4	
Input High Voltage, V_{IH} Min.	0.5,4.5	–	5	3.5				3.5	–	–	
	1,9	–	10	7				7	–	–	
	1.5,13.5	–	15	11				11	–	–	
Input Current I_{IN} Max.	–	0,18	18	±0.1	±0.1	±1	±1	–	$\pm 10^{-5}$	±0.1	μA

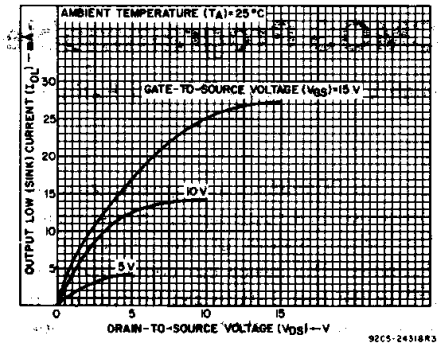

Fig. 2—Typical output low (sink) current characteristics.

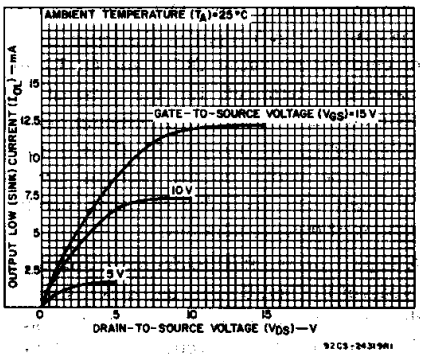

Fig. 3—Minimum output low (sink) current characteristics.

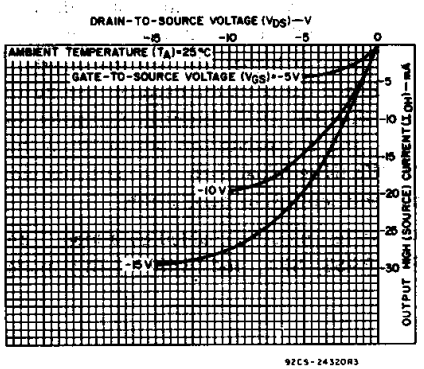

Fig. 4—Typical output high (source) current characteristics.

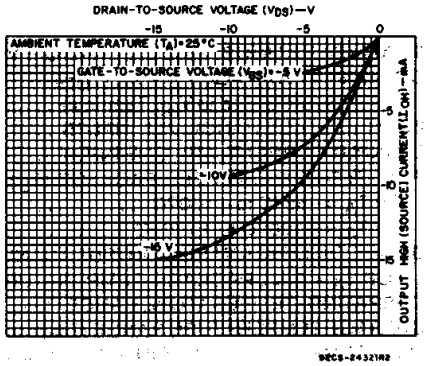

Fig. 5—Minimum output high (source) current characteristics.

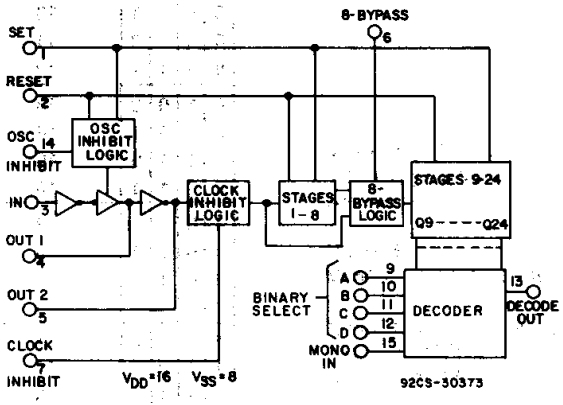

Fig. 1 — Functional block diagram.

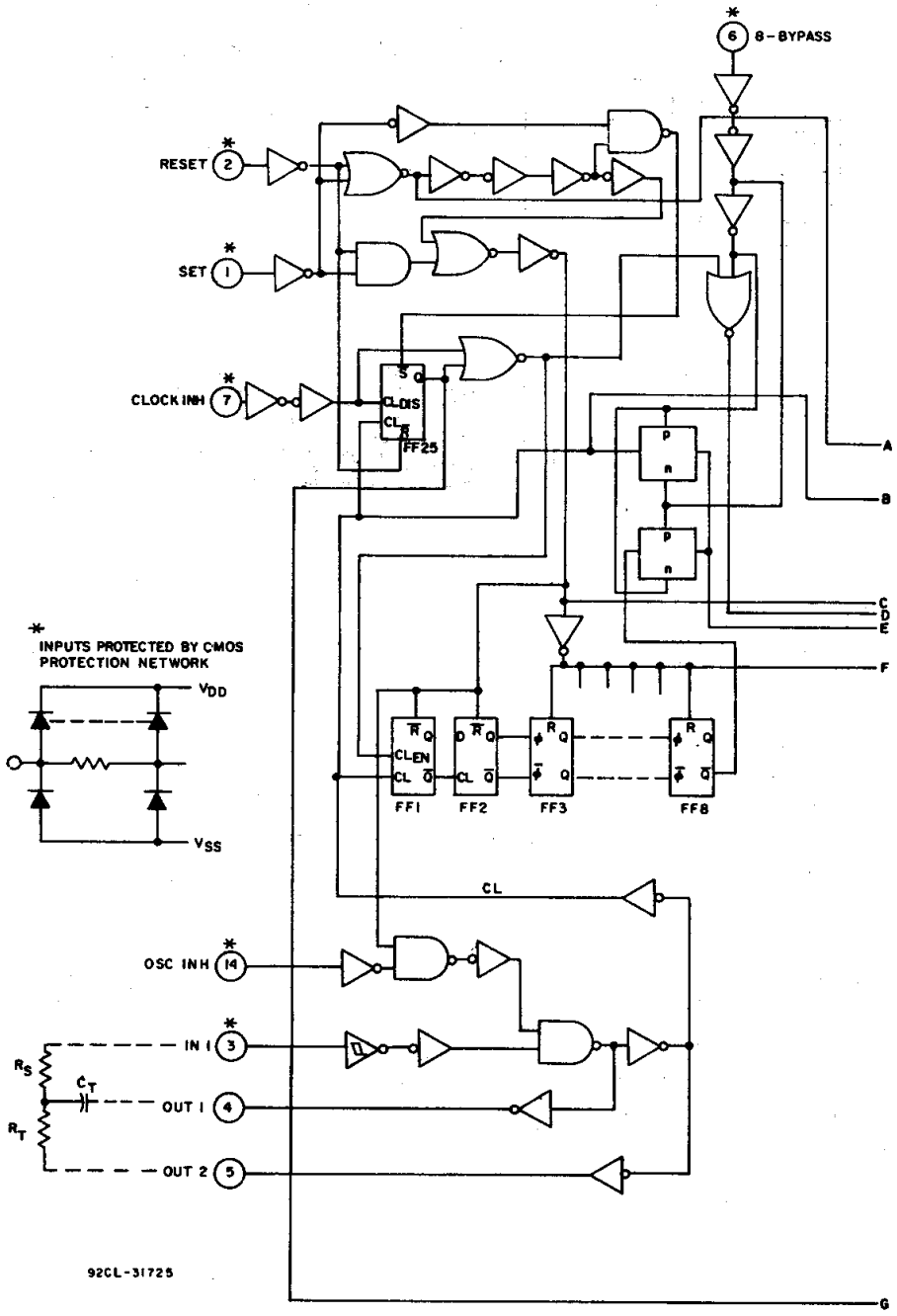

Fig.6 - Logic diagram for CD4536B [*continued on next page*].

NOTE: $f \approx \frac{1}{3R_T C_T}$, $R_S \approx (5 \rightarrow 10) \times R_T$

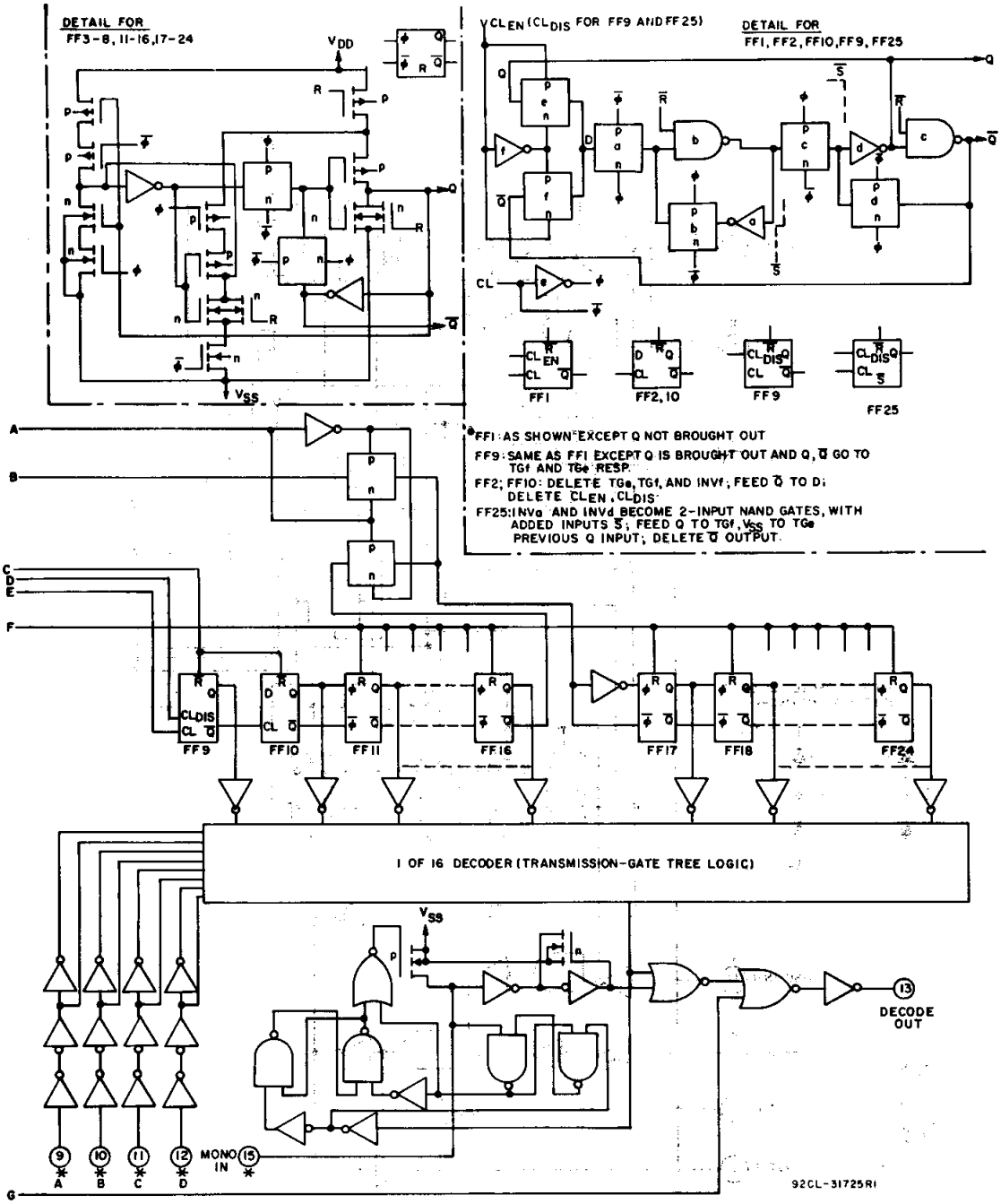

Fig.6 - Logic diagram for CD4536B [continued from previous page].

DYNAMIC ELECTRICAL CHARACTERISTICS, *at $T_A = 25°C$, Input t_r, $t_f = 20$ ns, $C_L = 50$ pF, $R_L = 200$ kΩ*

CHARACTERISTIC	V_{DD} (V)	LIMITS Min.	Typ.	Max.	UNITS
Propagation Delay Times: Clock to Q1, 8-Bypass High t_{PHL}, t_{PLH}	5	—	1	2	μs
	10	—	0.5	1	
	15	—	0.35	0.7	
Clock to Q1, 8-Bypass Low t_{PHL}, t_{PLH}	5	—	2.5	5	μs
	10	—	0.8	1.6	
	15	—	0.6	1.2	
Clock to Q16, T_{PHL} t_{PLH}	5	—	4	8	μs
	10	—	1.5	3	
	15	—	1	2	
Q_n to Q_{n+1}, t_{PHL}, t_{PLH}	5	—	150	300	ns
	10	—	75	150	
	15	—	50	100	
Set to Q_n, t_{PLH}	5	—	300	600	ns
	10	—	125	250	
	15	—	80	160	
Reset to Q_n, t_{PHL}	5	—	3	6	μs
	10	—	1	2	
	15	—	0.75	1.5	
Transition Time, t_{THL}, t_{TLH}	5	—	100	200	ns
	10	—	50	100	
	15	—	40	80	
Minimum Pulse Widths: Clock	5	—	200	400	ns
	10	—	75	150	
	15	—	50	100	
Set	5	—	200	400	ns
	10	—	100	200	
	15	—	60	120	
Reset	5	—	3	6	μs
	10	—	1	2	
	15	—	0.75	1.5	
Minimum Set Recovery Time,	5	—	2.5	5	μs
	10	—	1	2	
	15	—	0.6	1.6	
Minimum Reset Recovery Time,	5	—	3.5	7	μs
	10	—	1.5	3	
	15	—	1	2	
Maximum Clock Pulse Input Frequency, f_{CL}	5	0.5	1	—	MHz
	10	1.5	3	—	
	15	2.5	5	—	
Maximum Clock Pulse Input Rise or Fall Time, t_r, t_f	5,10,15	Unlimited			μs

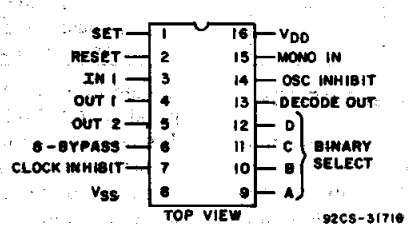

Terminal Assignment

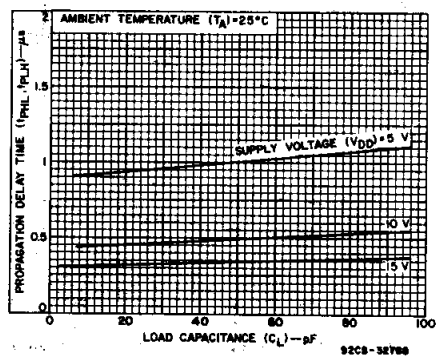

Fig. 7—Typical propagation delay time as a function of load capacitance (CLOCK to Q_1, 8-BYPASS high).

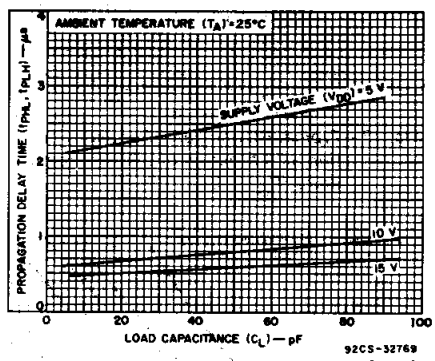

Fig. 8—Typical propagation delay time as a function of load capacitance (CLOCK to Q_1, 8-BYPASS low).

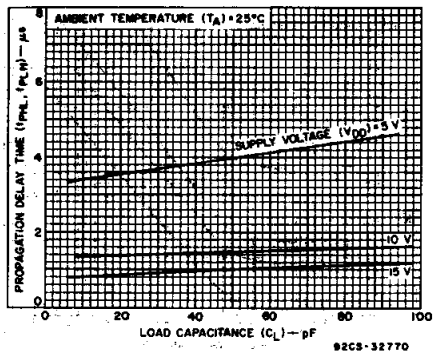

Fig. 9—Typical propagation delay time as a function of load capacitance (CLOCK to Q_{16}, 8-BYPASS high).

3

COMMERCIAL CMOS HIGH VOLTAGE ICs

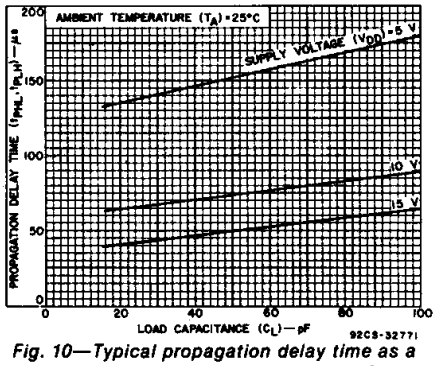

Fig. 10—Typical propagation delay time as a function of load capacitance (Q_N to Q_{N+1}).

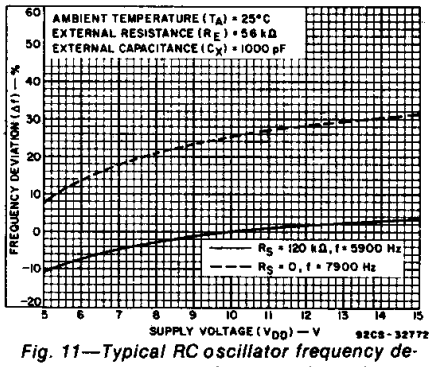

Fig. 11—Typical RC oscillator frequency deviation as a function of supply voltage.

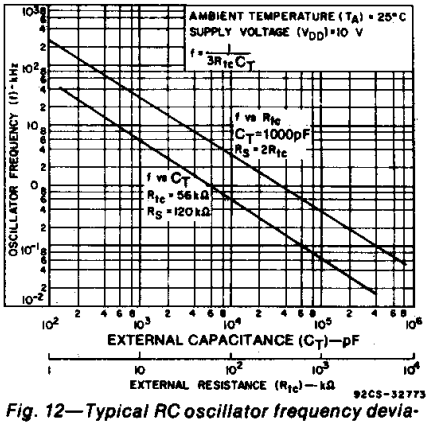

Fig. 12—Typical RC oscillator frequency deviation as a function of time constant resistance and capacitance.

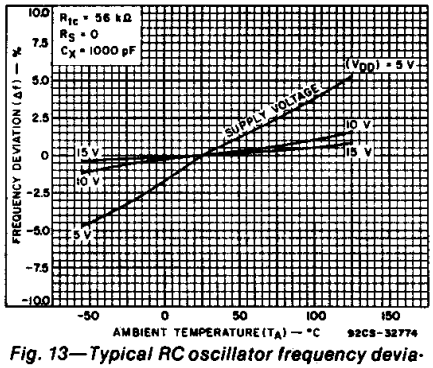

Fig. 13—Typical RC oscillator frequency deviation as a function of ambient temperature (R_S = 0).

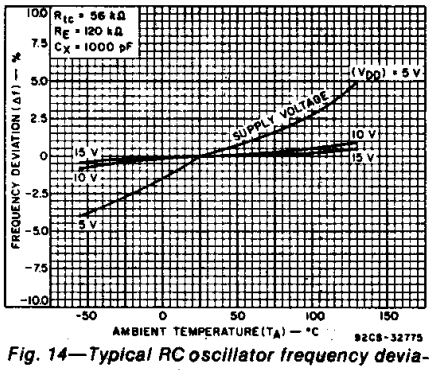

Fig. 14—Typical RC oscillator frequency deviation as a function of ambient temperature (R_S = 120 kΩ).

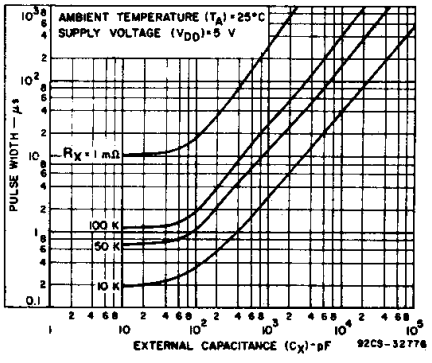

Fig. 15—Typical pulse width as a function of external capacitance (V_{DD} = 5 V).

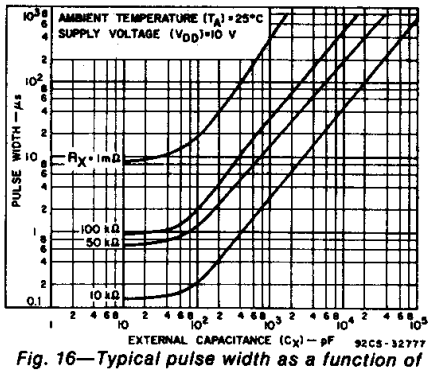

Fig. 16—Typical pulse width as a function of external capacitance (V_{DD} = 10 V).

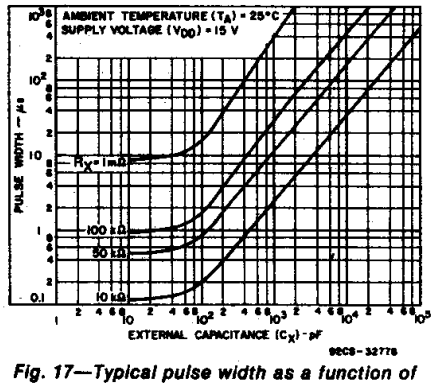

Fig. 17—Typical pulse width as a function of external capacitance (V_{DD} = 15 V).

Functional Test Sequence					
Inputs				Outputs	Comments
In_1	Set	Reset	8-Bypass	Decode Out Q1 thru Q24	All 24 steps are in Reset mode
1	0	1	1	0	
1	1	1	1	0	Counter is in three 8-stage section in parallel mode
0	1	1	1	0	First "1" to "0" transition of clock
1 0 — — —	1	1	1		255 "1" to "0" transitions are clocked in the counter
0	1	1	1	1	The 255 "1" to "0" transition
0	0	0	0	1	Counter converted back to 24 stages in series mode Set and Reset must be connected together and simultaneously go from "1" to "0"
1	0	0	0	1	In_1 Switches to a "1"
0	0	0	0	0	Counter Ripples from an all "1" state to an all "0" state

FUNCTIONAL TEST SEQUENCE

Test Function (Figure 23) has been included for the reduction of test time required to exercise all 24 counter stages. This test function divides the counter into three 8-stage sections and 255 counts are loaded in each of the 8-stage sections in parallel. All flip-flops are now at a "1". The counter is now returned to the normal 24-steps in series configuration. One more pulse is entered into In_1 which will cause the counter to ripple from an all "1" state to an all "0" state.

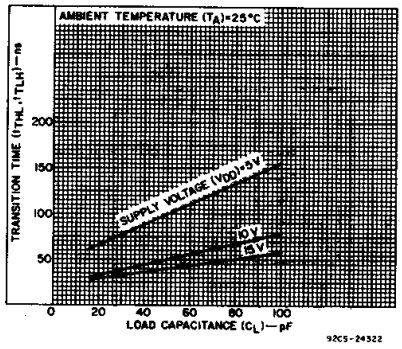

Fig. 18—Typical transition time as a function of load capacitance.

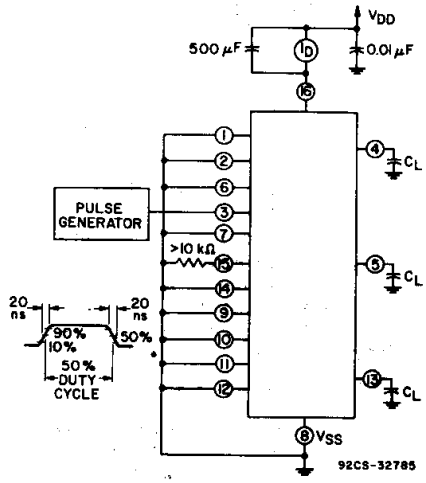

Fig. 20—Dynamic power dissipation test circuit and waveform.

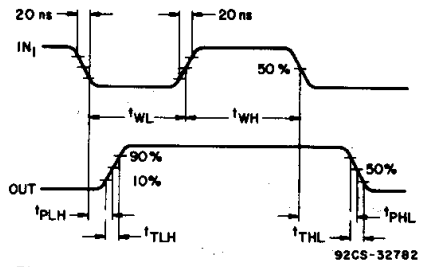

Fig. 22—Input waveforms for switching-time test circuit.

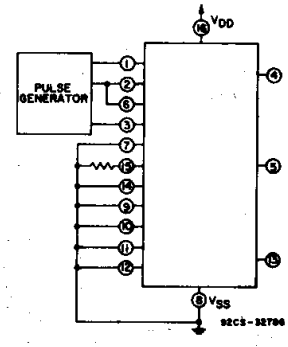

Fig. 23—Functional test circuit.

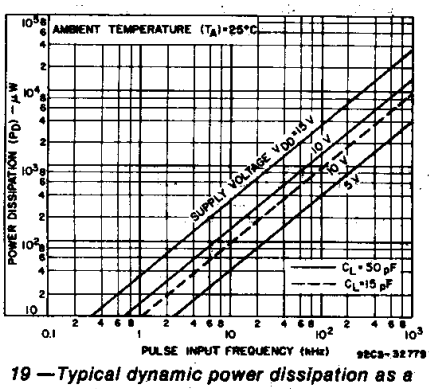

19 —Typical dynamic power dissipation as a function of input pulse frequency.

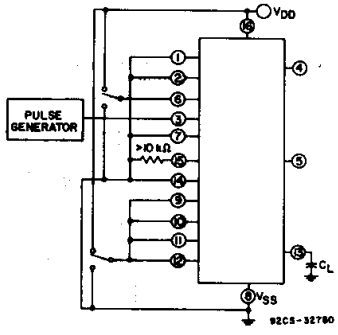

Fig. 21—Switching time test circuit.

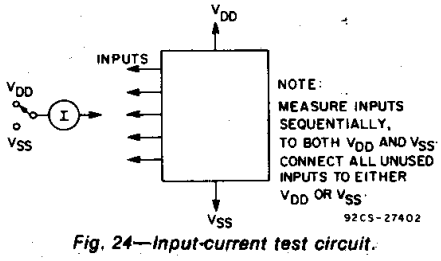

Fig. 24—Input-current test circuit.

TRUTH TABLE

IN1	SET	RESET	CLOCK INH	OSC INH	OUT1	OUT2	DECODE OUT
↗	0	0	0	0	↗	↘	No Change
↘	0	0	0	0	↘	↗	Advance to Next State
X	1	0	0	0	0	1	1
X	0	1	0	0	0	1	0
X	0	0	1	0			No Change
0	0	0	0	X	0	1	No Change
1	0	0	0	↗	↘	↗	Advance to Next State

0 = Low Level 1 = High Level X = Don't Care

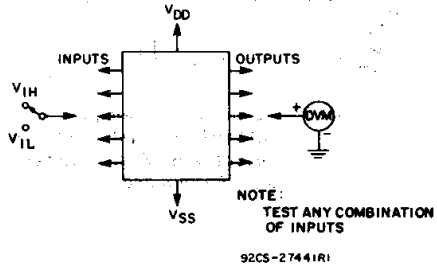

Fig. 25—Input-voltage test circuit.

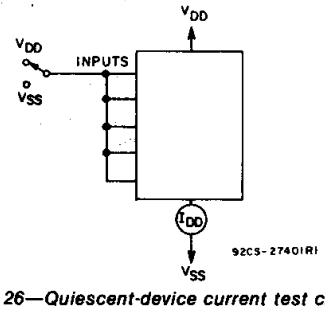

Fig. 26—Quiescent-device current test circuit.

APPLICATIONS

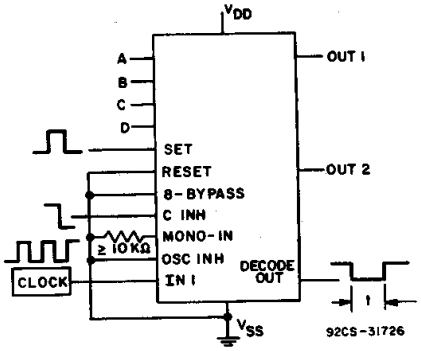

Fig. 27—Time interval configuration using external clock; set and clock inhibit functions.

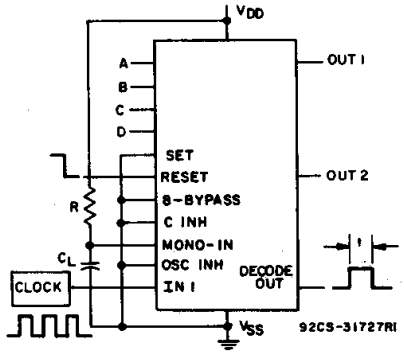

Fig. 28—Time interval configuration using external clock; reset and output monostable to achieve a pulse output.

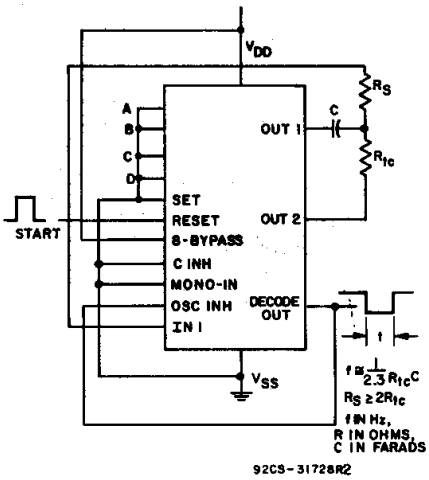

Fig. 29—Time interval configuration using on-chip RC oscillator and reset input to initiate time interval.

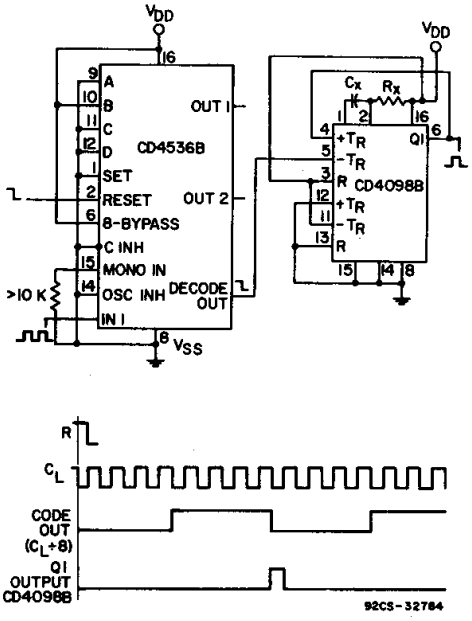

Fig.30 – Application showing use of CD4098B and CD4536B to get decode pulse 8 clock pulses after Reset pulse.

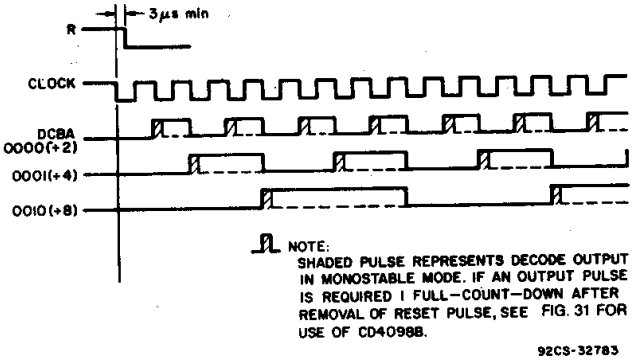

Fig.31 – CD4536B Timing Diagram.

Dimensions and pad layout for CD4536BH.

Dimensions in parentheses are in millimeters and are derived from the basic inch dimensions as indicated. Grid graduations are in mils (10^{-3} inch).

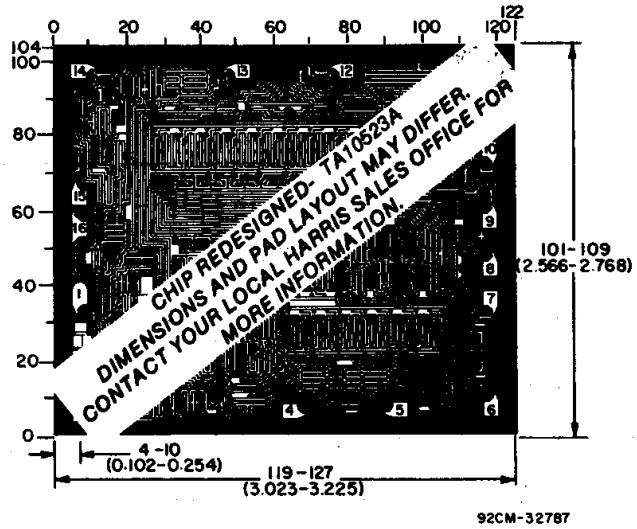

PACKAGING INFORMATION

Orderable Device	Status (1)	Package Type	Package Drawing	Pins	Package Qty	Eco Plan (2)	Lead/Ball Finish	MSL Peak Temp (3)	Op Temp (°C)	Top-Side Markings (4)	Samples
CD4536BDW	ACTIVE	SOIC	DW	16	40	Green (RoHS & no Sb/Br)	CU NIPDAU	Level-1-260C-UNLIM	-55 to 125	CD4536BM	Samples
CD4536BDWE4	ACTIVE	SOIC	DW	16	40	Green (RoHS & no Sb/Br)	CU NIPDAU	Level-1-260C-UNLIM	-55 to 125	CD4536BM	Samples
CD4536BDWG4	ACTIVE	SOIC	DW	16	40	Green (RoHS & no Sb/Br)	CU NIPDAU	Level-1-260C-UNLIM	-55 to 125	CD4536BM	Samples
CD4536BDWR	ACTIVE	SOIC	DW	16	2000	Green (RoHS & no Sb/Br)	CU NIPDAU	Level-1-260C-UNLIM	-55 to 125	CD4536BM	Samples
CD4536BDWRE4	ACTIVE	SOIC	DW	16	2000	Green (RoHS & no Sb/Br)	CU NIPDAU	Level-1-260C-UNLIM	-55 to 125	CD4536BM	Samples
CD4536BDWRG4	ACTIVE	SOIC	DW	16	2000	Green (RoHS & no Sb/Br)	CU NIPDAU	Level-1-260C-UNLIM	-55 to 125	CD4536BM	Samples
CD4536BE	ACTIVE	PDIP	N	16	25	Pb-Free (RoHS)	CU NIPDAU	N / A for Pkg Type	-55 to 125	CD4536BE	Samples
CD4536BEE4	ACTIVE	PDIP	N	16	25	Pb-Free (RoHS)	CU NIPDAU	N / A for Pkg Type	-55 to 125	CD4536BE	Samples
CD4536BF3A	ACTIVE	CDIP	J	16	1	TBD	A42	N / A for Pkg Type	-55 to 125	CD4536BF3A	Samples
CD4536BNSR	ACTIVE	SO	NS	16	2000	Green (RoHS & no Sb/Br)	CU NIPDAU	Level-1-260C-UNLIM	-55 to 125	CD4536B	Samples
CD4536BNSRE4	ACTIVE	SO	NS	16	2000	Green (RoHS & no Sb/Br)	CU NIPDAU	Level-1-260C-UNLIM	-55 to 125	CD4536B	Samples
CD4536BNSRG4	ACTIVE	SO	NS	16	2000	Green (RoHS & no Sb/Br)	CU NIPDAU	Level-1-260C-UNLIM	-55 to 125	CD4536B	Samples
CD4536BPW	ACTIVE	TSSOP	PW	16	90	Green (RoHS & no Sb/Br)	CU NIPDAU	Level-1-260C-UNLIM	-55 to 125	CM536B	Samples
CD4536BPWE4	ACTIVE	TSSOP	PW	16	90	Green (RoHS & no Sb/Br)	CU NIPDAU	Level-1-260C-UNLIM	-55 to 125	CM536B	Samples
CD4536BPWG4	ACTIVE	TSSOP	PW	16	90	Green (RoHS & no Sb/Br)	CU NIPDAU	Level-1-260C-UNLIM	-55 to 125	CM536B	Samples
CD4536BPWR	ACTIVE	TSSOP	PW	16	2000	Green (RoHS & no Sb/Br)	CU NIPDAU	Level-1-260C-UNLIM	-55 to 125	CM536B	Samples
CD4536BPWRE4	ACTIVE	TSSOP	PW	16	2000	Green (RoHS & no Sb/Br)	CU NIPDAU	Level-1-260C-UNLIM	-55 to 125	CM536B	Samples

Orderable Device	Status (1)	Package Type	Package Drawing	Pins	Package Qty	Eco Plan (2)	Lead/Ball Finish	MSL Peak Temp (3)	Op Temp (°C)	Top-Side Markings (4)	Samples
CD4536BPWRG4	ACTIVE	TSSOP	PW	16	2000	Green (RoHS & no Sb/Br)	CU NIPDAU	Level-1-260C-UNLIM	-55 to 125	CM536B	Samples

(1) The marketing status values are defined as follows:
ACTIVE: Product device recommended for new designs.
LIFEBUY: TI has announced that the device will be discontinued, and a lifetime-buy period is in effect.
NRND: Not recommended for new designs. Device is in production to support existing customers, but TI does not recommend using this part in a new design.
PREVIEW: Device has been announced but is not in production. Samples may or may not be available.
OBSOLETE: TI has discontinued the production of the device.

(2) Eco Plan - The planned eco-friendly classification: Pb-Free (RoHS), Pb-Free (RoHS Exempt), or Green (RoHS & no Sb/Br) - please check http://www.ti.com/productcontent for the latest availability information and additional product content details.
TBD: The Pb-Free/Green conversion plan has not been defined.
Pb-Free (RoHS): TI's terms "Lead-Free" or "Pb-Free" mean semiconductor products that are compatible with the current RoHS requirements for all 6 substances, including the requirement that lead not exceed 0.1% by weight in homogeneous materials. Where designed to be soldered at high temperatures, TI Pb-Free products are suitable for use in specified lead-free processes.
Pb-Free (RoHS Exempt): This component has a RoHS exemption for either 1) lead-based flip-chip solder bumps used between the die and package, or 2) lead-based die adhesive used between the die and leadframe. The component is otherwise considered Pb-Free (RoHS compatible) as defined above.
Green (RoHS & no Sb/Br): TI defines "Green" to mean Pb-Free (RoHS compatible), and free of Bromine (Br) and Antimony (Sb) based flame retardants (Br or Sb do not exceed 0.1% by weight in homogeneous material)

(3) MSL, Peak Temp. -- The Moisture Sensitivity Level rating according to the JEDEC industry standard classifications, and peak solder temperature.

(4) Multiple Top-Side Markings will be inside parentheses. Only one Top-Side Marking contained in parentheses and separated by a "~" will appear on a device. If a line is indented then it is a continuation of the previous line and the two combined represent the entire Top-Side Marking for that device.

Important Information and Disclaimer: The information provided on this page represents TI's knowledge and belief as of the date that it is provided. TI bases its knowledge and belief on information provided by third parties, and makes no representation or warranty as to the accuracy of such information. Efforts are underway to better integrate information from third parties. TI has taken and continues to take reasonable steps to provide representative and accurate information but may not have conducted destructive testing or chemical analysis on incoming materials and chemicals. TI and TI suppliers consider certain information to be proprietary, and thus CAS numbers and other limited information may not be available for release.

In no event shall TI's liability arising out of such information exceed the total purchase price of the TI part(s) at issue in this document sold by TI to Customer on an annual basis.

OTHER QUALIFIED VERSIONS OF CD4536B, CD4536B-MIL :

- Catalog: CD4536B
- Military: CD4536B-MIL

NOTE: Qualified Version Definitions:

- Catalog - TI's standard catalog product
- Military - QML certified for Military and Defense Applications

TAPE AND REEL INFORMATION

REEL DIMENSIONS

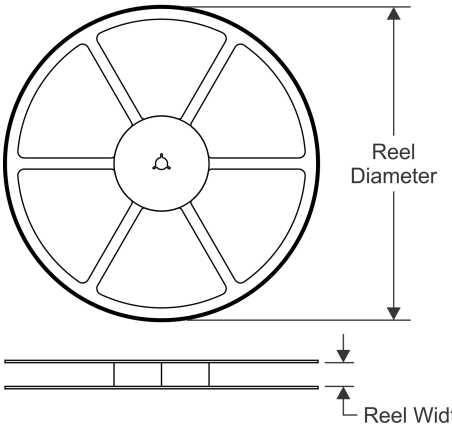

TAPE DIMENSIONS

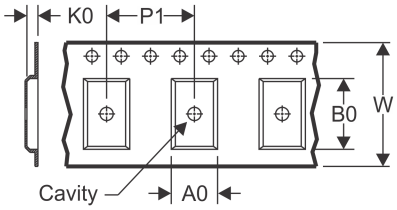

A0	Dimension designed to accommodate the component width
B0	Dimension designed to accommodate the component length
K0	Dimension designed to accommodate the component thickness
W	Overall width of the carrier tape
P1	Pitch between successive cavity centers

QUADRANT ASSIGNMENTS FOR PIN 1 ORIENTATION IN TAPE

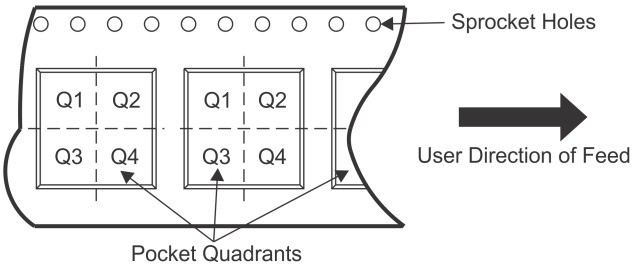

*All dimensions are nominal

Device	Package Type	Package Drawing	Pins	SPQ	Reel Diameter (mm)	Reel Width W1 (mm)	A0 (mm)	B0 (mm)	K0 (mm)	P1 (mm)	W (mm)	Pin1 Quadrant
CD4536BDWR	SOIC	DW	16	2000	330.0	16.4	10.75	10.7	2.7	12.0	16.0	Q1
CD4536BNSR	SO	NS	16	2000	330.0	16.4	8.2	10.5	2.5	12.0	16.0	Q1
CD4536BPWR	TSSOP	PW	16	2000	330.0	12.4	6.9	5.6	1.6	8.0	12.0	Q1

TAPE AND REEL BOX DIMENSIONS

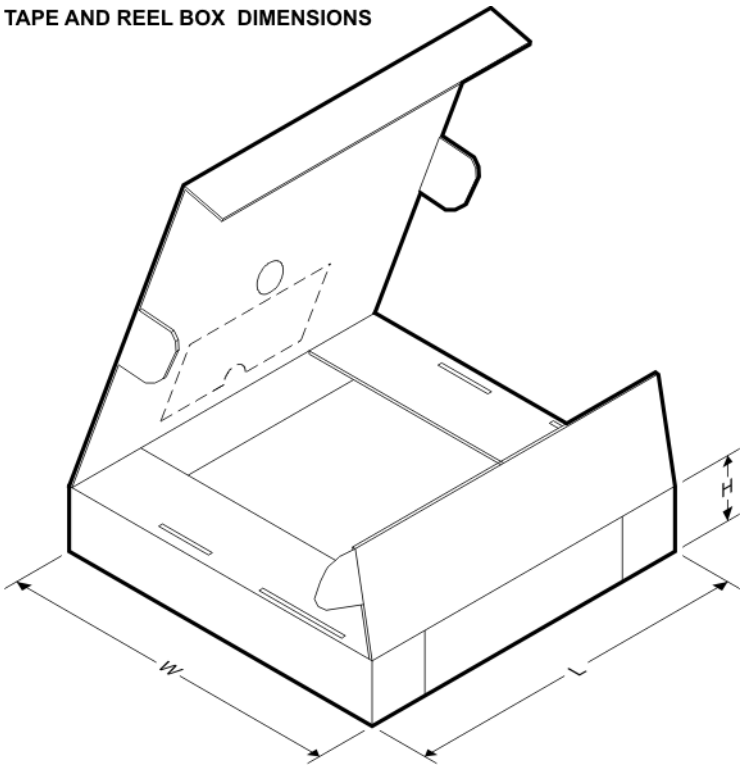

*All dimensions are nominal

Device	Package Type	Package Drawing	Pins	SPQ	Length (mm)	Width (mm)	Height (mm)
CD4536BDWR	SOIC	DW	16	2000	367.0	367.0	38.0
CD4536BNSR	SO	NS	16	2000	367.0	367.0	38.0
CD4536BPWR	TSSOP	PW	16	2000	367.0	367.0	35.0

J (R–GDIP–T**) CERAMIC DUAL IN–LINE PACKAGE

14 LEADS SHOWN

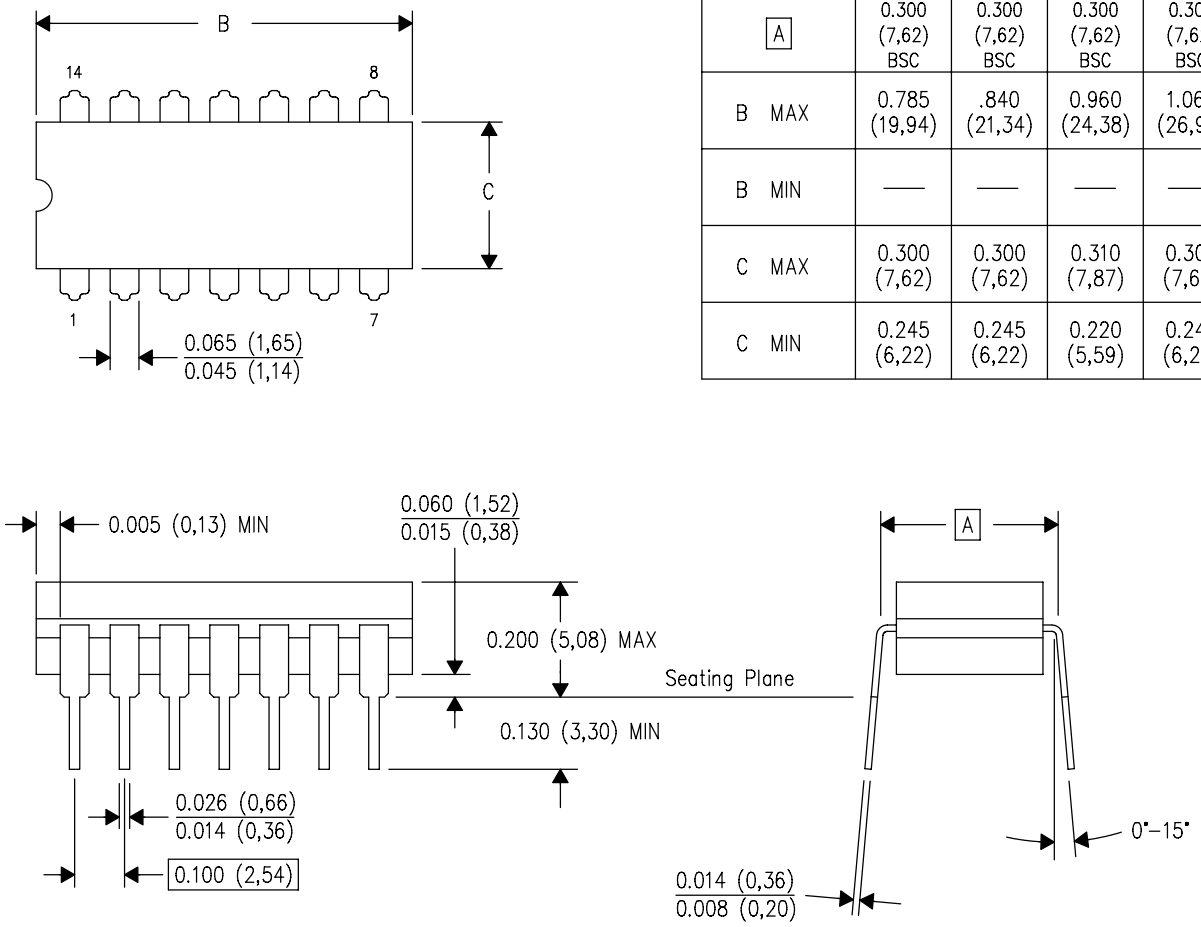

DIM \ PINS **	14	16	18	20
A	0.300 (7,62) BSC	0.300 (7,62) BSC	0.300 (7,62) BSC	0.300 (7,62) BSC
B MAX	0.785 (19,94)	.840 (21,34)	0.960 (24,38)	1.060 (26,92)
B MIN	—	—	—	—
C MAX	0.300 (7,62)	0.300 (7,62)	0.310 (7,87)	0.300 (7,62)
C MIN	0.245 (6,22)	0.245 (6,22)	0.220 (5,59)	0.245 (6,22)

4040083/F 03/03

NOTES:
- A. All linear dimensions are in inches (millimeters).
- B. This drawing is subject to change without notice.
- C. This package is hermetically sealed with a ceramic lid using glass frit.
- D. Index point is provided on cap for terminal identification only on press ceramic glass frit seal only.
- E. Falls within MIL STD 1835 GDIP1–T14, GDIP1–T16, GDIP1–T18 and GDIP1–T20.

N (R–PDIP–T**) PLASTIC DUAL–IN–LINE PACKAGE

16 PINS SHOWN

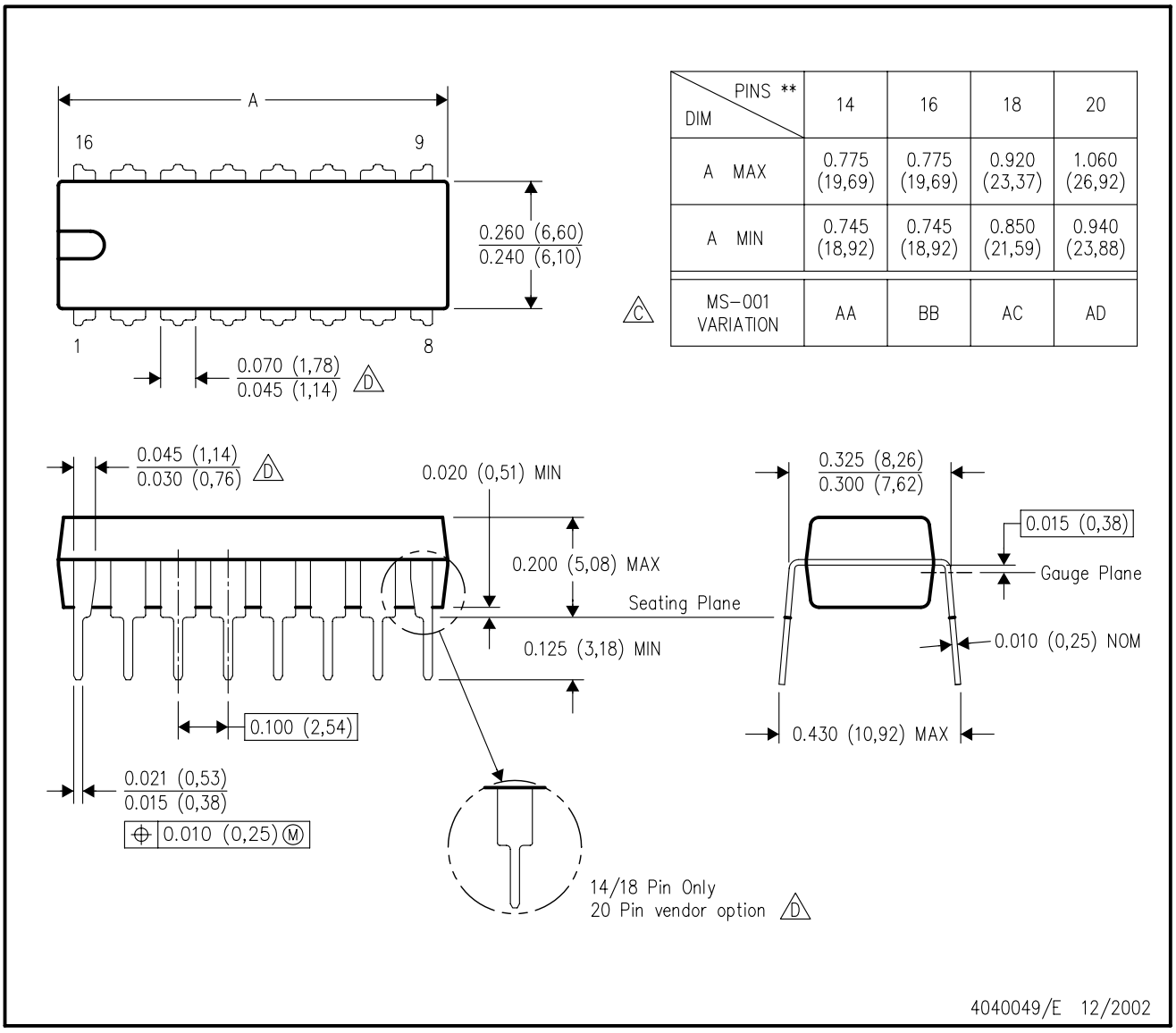

DIM \ PINS **	14	16	18	20
A MAX	0.775 (19,69)	0.775 (19,69)	0.920 (23,37)	1.060 (26,92)
A MIN	0.745 (18,92)	0.745 (18,92)	0.850 (21,59)	0.940 (23,88)
MS–001 VARIATION (C)	AA	BB	AC	AD

NOTES:
A. All linear dimensions are in inches (millimeters).
B. This drawing is subject to change without notice.
C. Falls within JEDEC MS–001, except 18 and 20 pin minimum body length (Dim A).
D. The 20 pin end lead shoulder width is a vendor option, either half or full width.

PW (R–PDSO–G16) PLASTIC SMALL OUTLINE

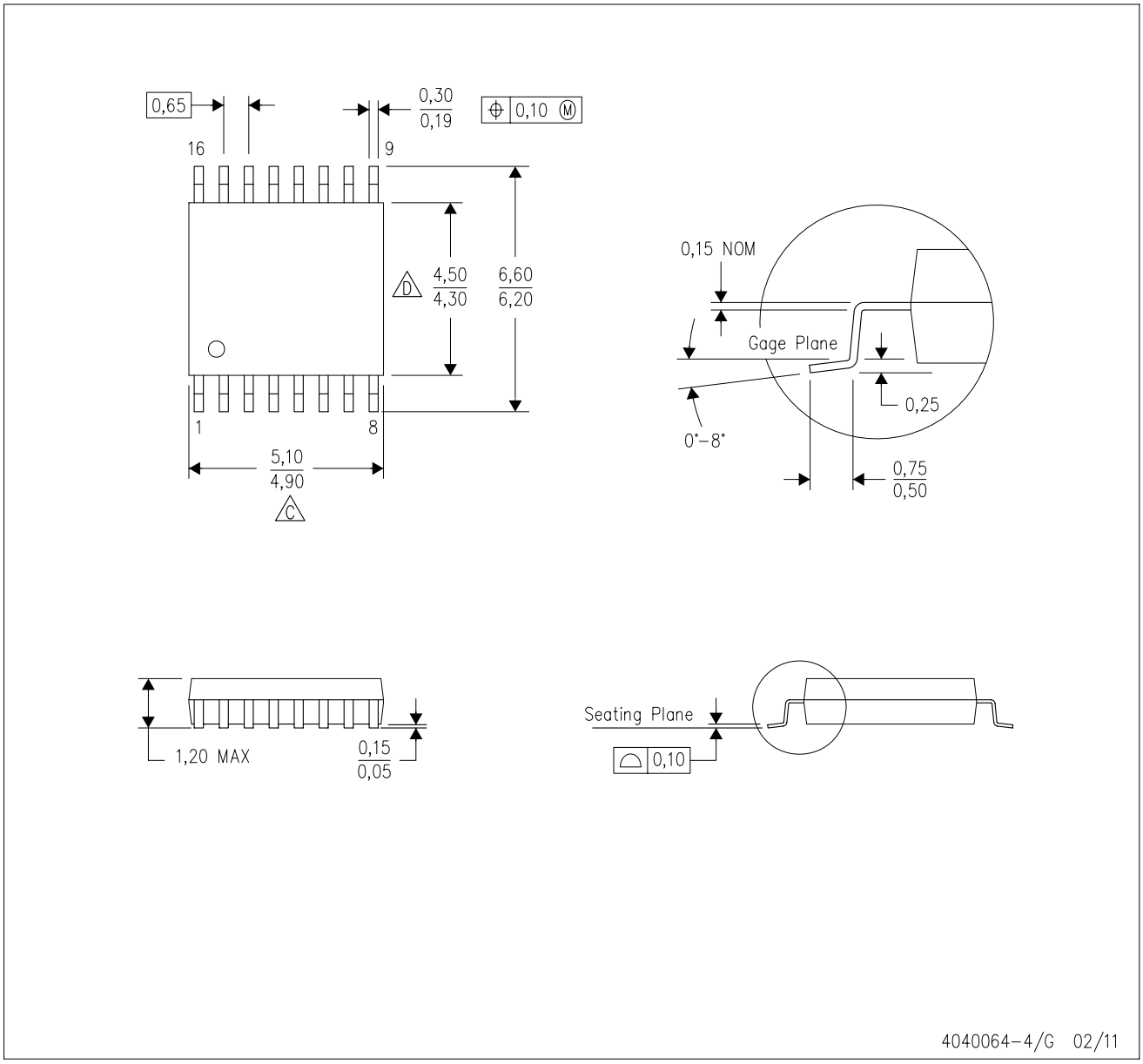

NOTES:
A. All linear dimensions are in millimeters. Dimensioning and tolerancing per ASME Y14.5M–1994.
B. This drawing is subject to change without notice.
C. Body length does not include mold flash, protrusions, or gate burrs. Mold flash, protrusions, or gate burrs shall not exceed 0,15 each side.
D. Body width does not include interlead flash. Interlead flash shall not exceed 0,25 each side.
E. Falls within JEDEC MO–153

PW (R–PDSO–G16) PLASTIC SMALL OUTLINE

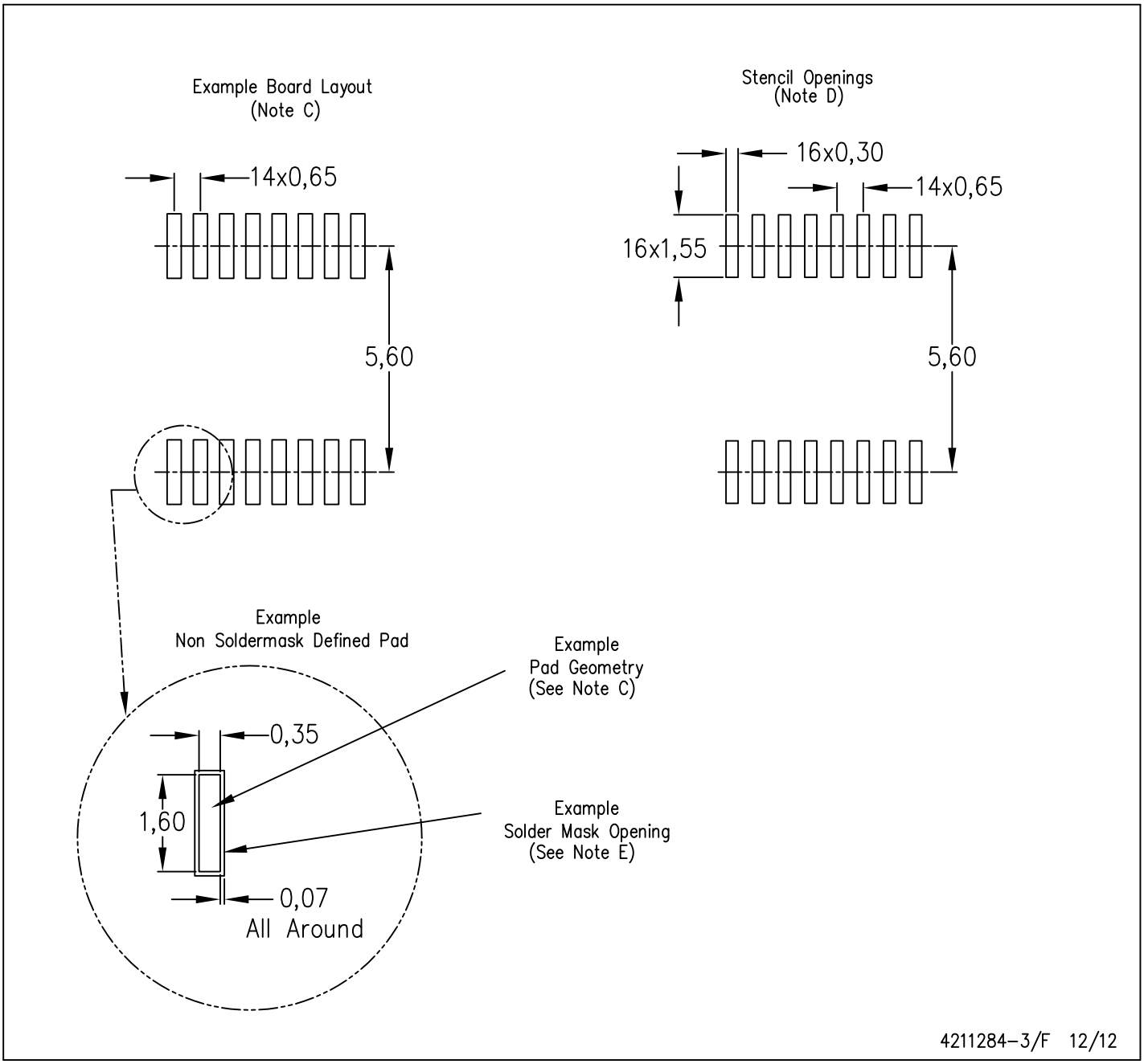

NOTES:
A. All linear dimensions are in millimeters.
B. This drawing is subject to change without notice.
C. Publication IPC–7351 is recommended for alternate designs.
D. Laser cutting apertures with trapezoidal walls and also rounding corners will offer better paste release. Customers should contact their board assembly site for stencil design recommendations. Refer to IPC–7525 for other stencil recommendations.
E. Customers should contact their board fabrication site for solder mask tolerances between and around signal pads.

DW (R–PDSO–G16) PLASTIC SMALL OUTLINE

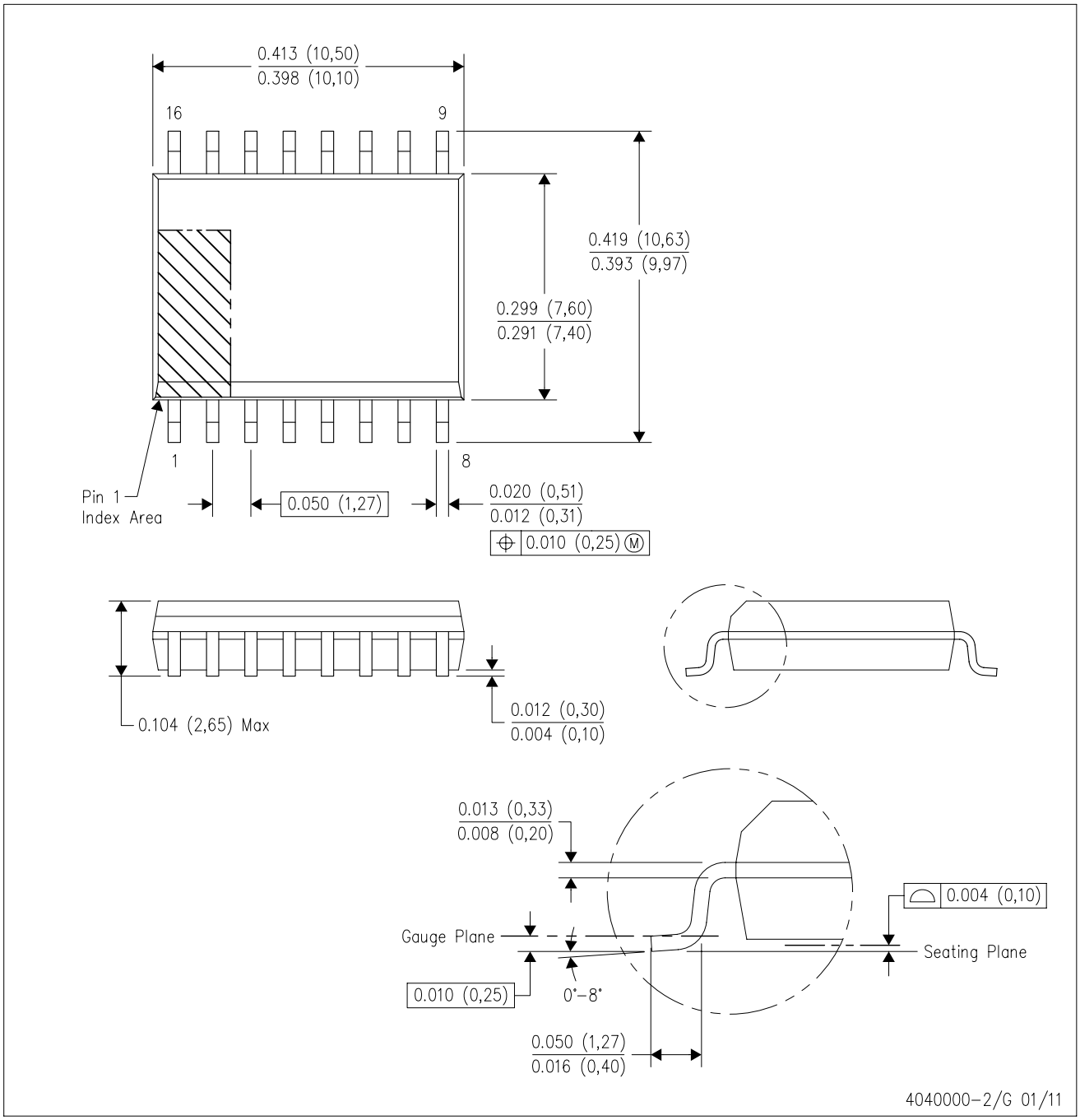

NOTES:
A. All linear dimensions are in inches (millimeters). Dimensioning and tolerancing per ASME Y14.5M–1994.
B. This drawing is subject to change without notice.
C. Body dimensions do not include mold flash or protrusion not to exceed 0.006 (0,15).
D. Falls within JEDEC MS–013 variation AA.

DW (R–PDSO–G16) PLASTIC SMALL OUTLINE

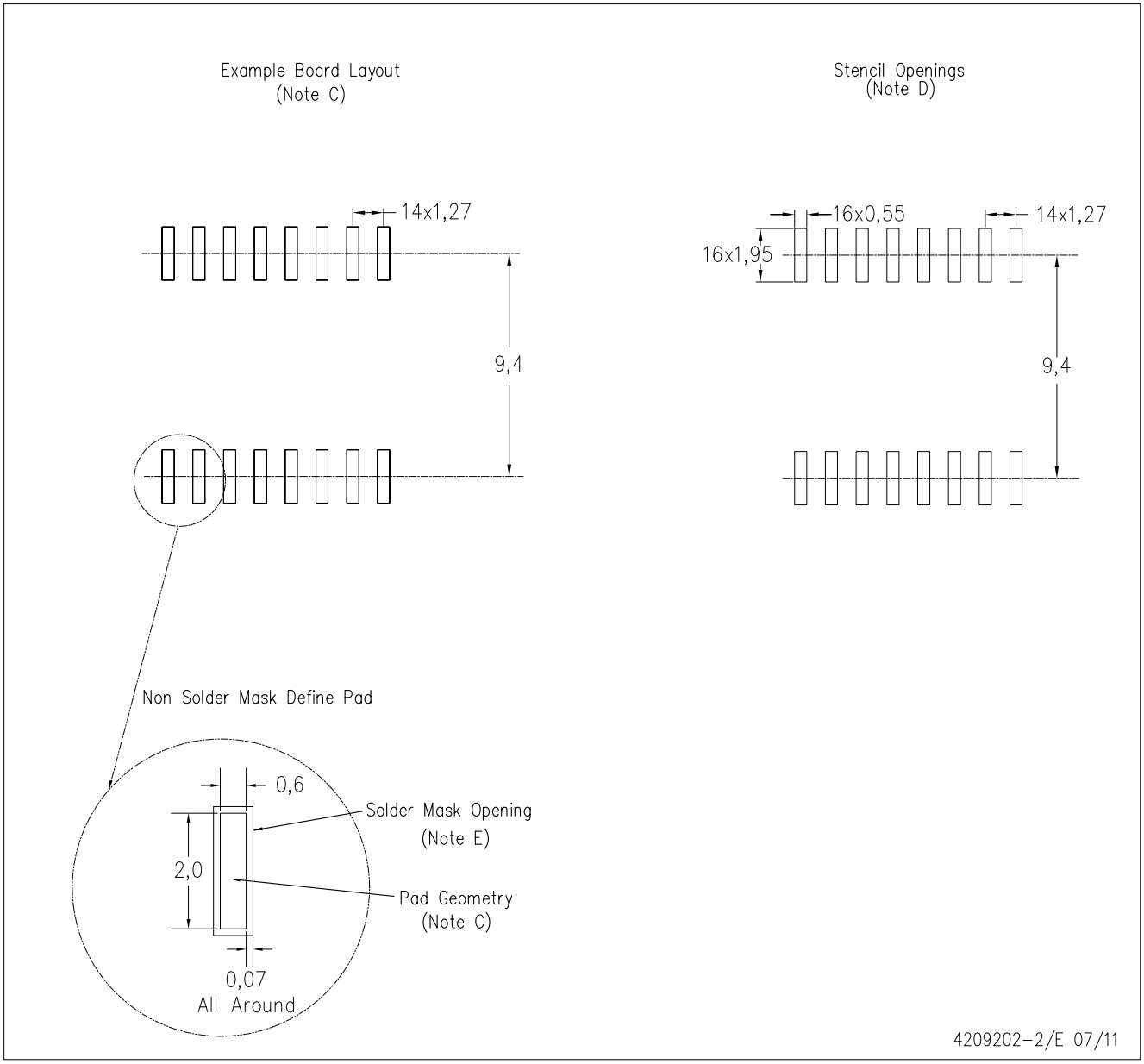

NOTES:
A. All linear dimensions are in millimeters.
B. This drawing is subject to change without notice.
C. Refer to IPC7351 for alternate board design.
D. Laser cutting apertures with trapezoidal walls and also rounding corners will offer better paste release. Customers should contact their board assembly site for stencil design recommendations. Refer to IPC–7525
E. Customers should contact their board fabrication site for solder mask tolerances between and around signal pads.

MECHANICAL DATA

NS (R-PDSO-G)** **PLASTIC SMALL-OUTLINE PACKAGE**

14-PINS SHOWN

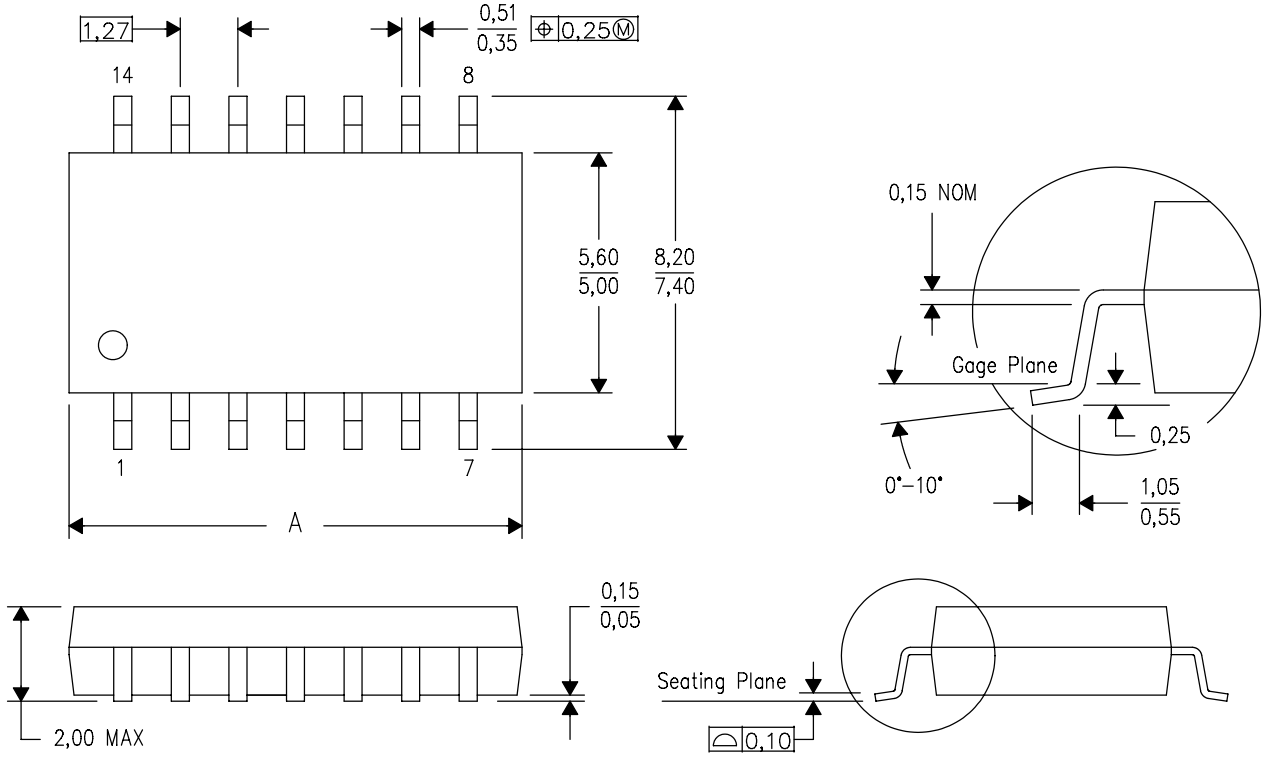

DIM \ PINS **	14	16	20	24
A MAX	10,50	10,50	12,90	15,30
A MIN	9,90	9,90	12,30	14,70

4040062/C 03/03

NOTES:
A. All linear dimensions are in millimeters.
B. This drawing is subject to change without notice.
C. Body dimensions do not include mold flash or protrusion, not to exceed 0,15.

IMPORTANT NOTICE

Texas Instruments Incorporated and its subsidiaries (TI) reserve the right to make corrections, enhancements, improvements and other changes to its semiconductor products and services per JESD46, latest issue, and to discontinue any product or service per JESD48, latest issue. Buyers should obtain the latest relevant information before placing orders and should verify that such information is current and complete. All semiconductor products (also referred to herein as “components”) are sold subject to TI’s terms and conditions of sale supplied at the time of order acknowledgment.

TI warrants performance of its components to the specifications applicable at the time of sale, in accordance with the warranty in TI’s terms and conditions of sale of semiconductor products. Testing and other quality control techniques are used to the extent TI deems necessary to support this warranty. Except where mandated by applicable law, testing of all parameters of each component is not necessarily performed.

TI assumes no liability for applications assistance or the design of Buyers’ products. Buyers are responsible for their products and applications using TI components. To minimize the risks associated with Buyers’ products and applications, Buyers should provide adequate design and operating safeguards.

TI does not warrant or represent that any license, either express or implied, is granted under any patent right, copyright, mask work right, or other intellectual property right relating to any combination, machine, or process in which TI components or services are used. Information published by TI regarding third-party products or services does not constitute a license to use such products or services or a warranty or endorsement thereof. Use of such information may require a license from a third party under the patents or other intellectual property of the third party, or a license from TI under the patents or other intellectual property of TI.

Reproduction of significant portions of TI information in TI data books or data sheets is permissible only if reproduction is without alteration and is accompanied by all associated warranties, conditions, limitations, and notices. TI is not responsible or liable for such altered documentation. Information of third parties may be subject to additional restrictions.

Resale of TI components or services with statements different from or beyond the parameters stated by TI for that component or service voids all express and any implied warranties for the associated TI component or service and is an unfair and deceptive business practice. TI is not responsible or liable for any such statements.

Buyer acknowledges and agrees that it is solely responsible for compliance with all legal, regulatory and safety-related requirements concerning its products, and any use of TI components in its applications, notwithstanding any applications-related information or support that may be provided by TI. Buyer represents and agrees that it has all the necessary expertise to create and implement safeguards which anticipate dangerous consequences of failures, monitor failures and their consequences, lessen the likelihood of failures that might cause harm and take appropriate remedial actions. Buyer will fully indemnify TI and its representatives against any damages arising out of the use of any TI components in safety-critical applications.

In some cases, TI components may be promoted specifically to facilitate safety-related applications. With such components, TI’s goal is to help enable customers to design and create their own end-product solutions that meet applicable functional safety standards and requirements. Nonetheless, such components are subject to these terms.

No TI components are authorized for use in FDA Class III (or similar life-critical medical equipment) unless authorized officers of the parties have executed a special agreement specifically governing such use.

Only those TI components which TI has specifically designated as military grade or “enhanced plastic” are designed and intended for use in military/aerospace applications or environments. Buyer acknowledges and agrees that any military or aerospace use of TI components which have ***not*** been so designated is solely at the Buyer's risk, and that Buyer is solely responsible for compliance with all legal and regulatory requirements in connection with such use.

TI has specifically designated certain components as meeting ISO/TS16949 requirements, mainly for automotive use. In any case of use of non-designated products, TI will not be responsible for any failure to meet ISO/TS16949.

Products		**Applications**	
Audio	www.ti.com/audio	Automotive and Transportation	www.ti.com/automotive
Amplifiers	amplifier.ti.com	Communications and Telecom	www.ti.com/communications
Data Converters	dataconverter.ti.com	Computers and Peripherals	www.ti.com/computers
DLP® Products	www.dlp.com	Consumer Electronics	www.ti.com/consumer-apps
DSP	dsp.ti.com	Energy and Lighting	www.ti.com/energy
Clocks and Timers	www.ti.com/clocks	Industrial	www.ti.com/industrial
Interface	interface.ti.com	Medical	www.ti.com/medical
Logic	logic.ti.com	Security	www.ti.com/security
Power Mgmt	power.ti.com	Space, Avionics and Defense	www.ti.com/space-avionics-defense
Microcontrollers	microcontroller.ti.com	Video and Imaging	www.ti.com/video
RFID	www.ti-rfid.com		
OMAP Applications Processors	www.ti.com/omap	**TI E2E Community**	e2e.ti.com
Wireless Connectivity	www.ti.com/wirelessconnectivity		

Mailing Address: Texas Instruments, Post Office Box 655303, Dallas, Texas 75265
Copyright © 2013, Texas Instruments Incorporated

OCEAN CHIPS
Океан Электроники
Поставка электронных компонентов

Компания «Океан Электроники» предлагает заключение долгосрочных отношений при поставках импортных электронных компонентов на взаимовыгодных условиях!

Наши преимущества:

- Поставка оригинальных импортных электронных компонентов напрямую с производств Америки, Европы и Азии, а так же с крупнейших складов мира;
- Широкая линейка поставок активных и пассивных импортных электронных компонентов (более 30 млн. наименований);
- Поставка сложных, дефицитных, либо снятых с производства позиций;
- Оперативные сроки поставки под заказ (от 5 рабочих дней);
- Экспресс доставка в любую точку России;
- Помощь Конструкторского Отдела и консультации квалифицированных инженеров;
- Техническая поддержка проекта, помощь в подборе аналогов, поставка прототипов;
- Поставка электронных компонентов под контролем ВП;
- Система менеджмента качества сертифицирована по Международному стандарту ISO 9001;
- При необходимости вся продукция военного и аэрокосмического назначения проходит испытания и сертификацию в лаборатории (по согласованию с заказчиком);
- Поставка специализированных компонентов военного и аэрокосмического уровня качества (Xilinx, Altera, Analog Devices, Intersil, Interpoint, Microsemi, Actel, Aeroflex, Peregrine, VPT, Syfer, Eurofarad, Texas Instruments, MS Kennedy, Miteq, Cobham, E2V, MA-COM, Hittite, Mini-Circuits, General Dynamics и др.);

Компания «Океан Электроники» является официальным дистрибьютором и эксклюзивным представителем в России одного из крупнейших производителей разъемов военного и аэрокосмического назначения **«JONHON»**, а так же официальным дистрибьютором и эксклюзивным представителем в России производителя высокотехнологичных и надежных решений для передачи СВЧ сигналов **«FORSTAR»**.

AVIC JONHON

«JONHON» (основан в 1970 г.)

Разъемы специального, военного и аэрокосмического назначения:

(Применяются в военной, авиационной, аэрокосмической, морской, железнодорожной, горно- и нефтедобывающей отраслях промышленности)

«FORSTAR» (основан в 1998 г.)

ВЧ соединители, коаксиальные кабели, кабельные сборки и микроволновые компоненты:

(Применяются в телекоммуникациях гражданского и специального назначения, в средствах связи, РЛС, а так же военной, авиационной и аэрокосмической отраслях промышленности).

FORSTAR®

Телефон: 8 (812) 309-75-97 (многоканальный)
Факс: 8 (812) 320-03-32
Электронная почта: ocean@oceanchips.ru
Web: http://oceanchips.ru/
Адрес: 198099, г. Санкт-Петербург, ул. Калинина, д. 2, корп. 4, лит. А