Discontinued

2mm PITCH METRIC CONNECTORS FOR PCB CONNECTION

FCN-086 /087 SERIES

■ OVERVIEW

Fujitsu's 2mm hard metric connector F-PACK-3 (FCN-086/087 series) are connectors for connecting boards developed to support high-speed transmission/high density packaging of communication equipment, conforms to IEC 917 (DIN 43355) and IEC 61076-4-101, and supports compact PCI. Product meets Bellcor 1217. To support high-speed transmission, these connectors implement low inductance, low cross-talk, and matching characteristic impedance (50 ohms), exhibiting superb transmission characteristics.

Connection with the PCB is solderless (press fit) for both the plug/socket side, making mounting cost effective. Insertion connections are completely unnecessary since a polarity key is supported.

Plug contact has a four level sequence structure that makes connection/disconnection in an active state possible. Terminals have a five level pin length to support various applications. New customized connectors can be supported by freely combining the pin lengths of contacts and terminals.

For shield plate products, which support high-speed transmission based on standard products, 5 row 55, 95, 110, 110 (with key) and 125 contact, plugs support 77, 133, 154 and 175 contacts. The shield plate corresponds to the respective number of contacts, and the standard is post attachment. Sockets can also be shipped with shields pre-attached.

8 row products are also in the series. Consult factory for your requirements.

Fujitsu has developed a new high density power connector (25% denser) to improve operability.

A double press fit, which can connect two printed boards with one connector, greatly contributes to improved mounting and decreasing cost. Consult factory for details.

■ SPECIFICATIONS

Item	Specification	
	Standard connector	Power connecto r
Operating temperature range	-55° C to +125° C	-40° C to +85° C
Current rating	1A DC max. (75° C)	7A DC/contact max. (75° C)
Voltage rating	500V AC r.m.s	56V DC
Contact resistance	20mohms max. (DC 20mV,10mA)	20mohms max. (DC 20mV, 10mA)
Insulation resistance	10,000 Mohms min. (100V DC)	10,000 Mohms min. (100V DC)
Dielectric strength	750V AC for 1 minute	600V AC for 1 minute
Insertion/Withdrawl life	125 times	250 times
Insertion force	0.75N/pin min.	20N/connector max.
Withdrawl force	0.15N/pin min.	1N/connector min.

■ CHARACTERISTICS

Item	Material
Characteristic impedance	50 ohms
Transmission speed	300 MHz
Near end cross talk	4.3 % max.

■ MATERIALS

Item	Material
Insulator	Polyester resin (UL94V-0)
Conductor	Copper alloy
Plating	Press fit: Solder Press fit other: PAGOS Contact area: Gold (PAGOS) Lead / press fit area: Solder

■ CONFIGURATION OF F&T 2 MM H.M. CONNECTOR

1. Basic configuration of socket/plug

There are five types of sockets: three basic types: type A (110 contacts), type B (125 contacts), and type C (55 contacts), and a 110 contact and 95 contact types. Many coding keys are in the series to prevent insertion errors.

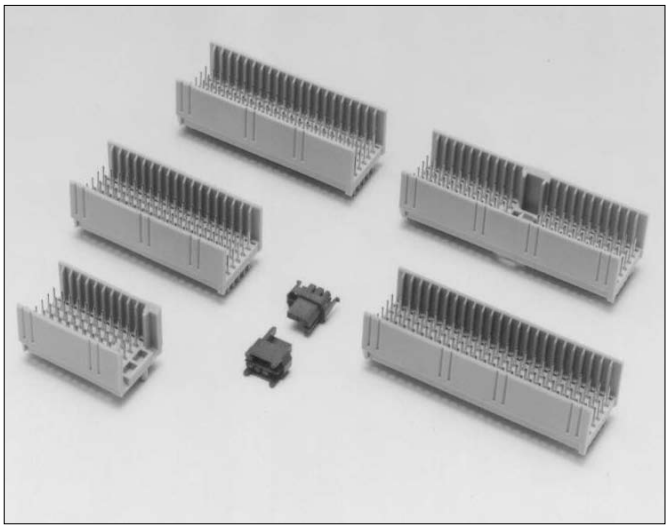

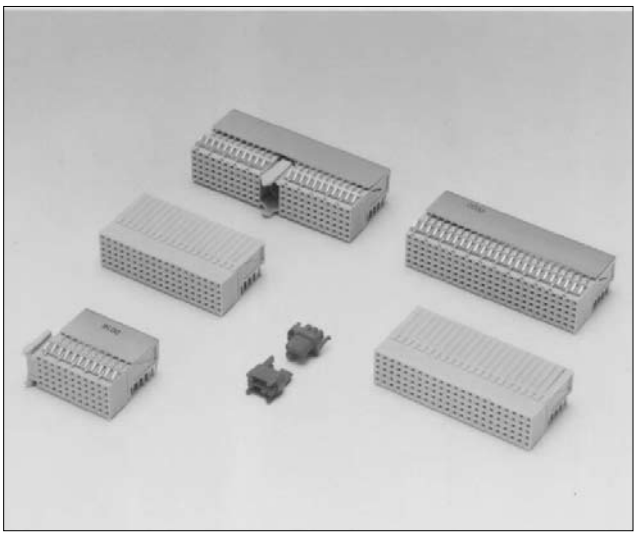

■ TERMINAL CONFIGURATION OF PLUG

The contact pins have a three-level sequence structure and can be connected/disconnected in an active state. The terminal side can support various applications with four types of length. These combinations allow 20 types of terminals.

Relationship between housing and terminals
Terminal types in the series

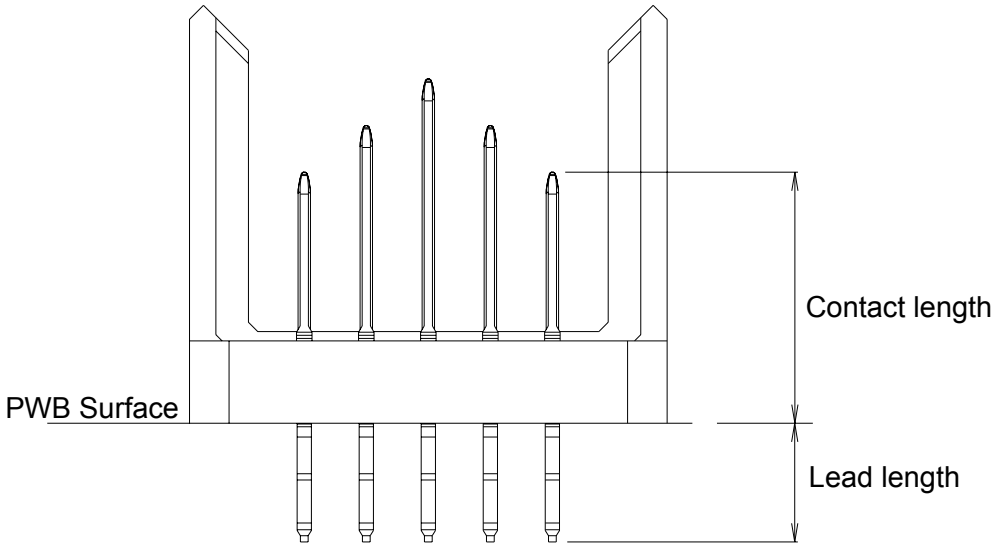

PC Board Face
Contact Types

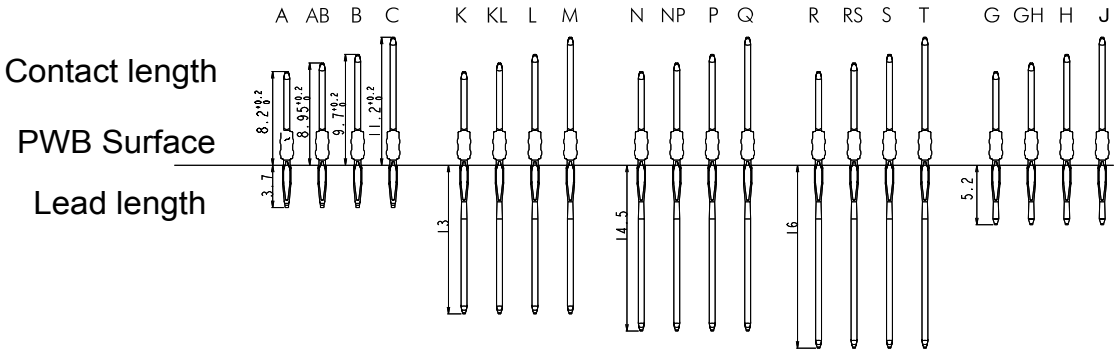

Request Form for Customer Specific Pin Arrangement for 2mm Connectors

Part of the benefit of using the FCN-086 2mm Backplane connector is the flexibility of creating unique contact loads in the connector body. To define your needs, make a photocopy of the following page(s), select your connector needs, and fill in the blanks with the specific contact designation (see page 5 for available contacts). Forward to Fujitsu for quotation and part number assignment. (Please note that the pin arraignment drawings are "View from the Mating Side").

1. TYPE A (110 pos. with polarization key) (5+2)

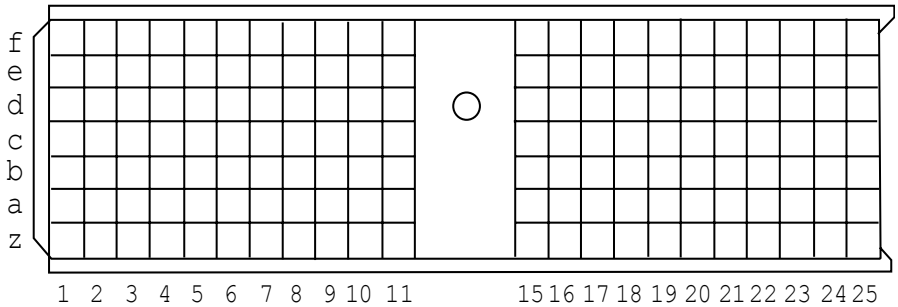

2. TYPE B (125 pos.) (5+2)

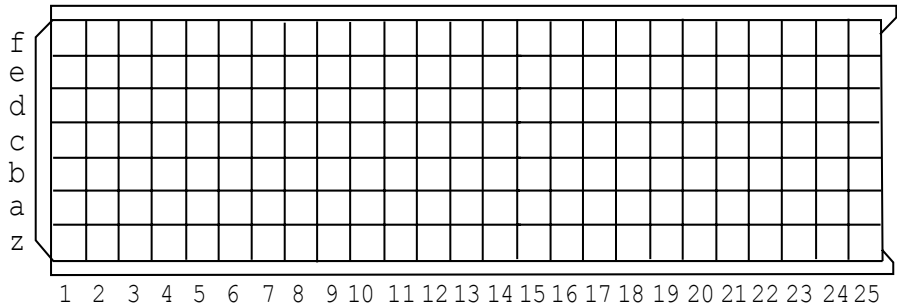

3. TYPE C (55 pos.) (5+2)

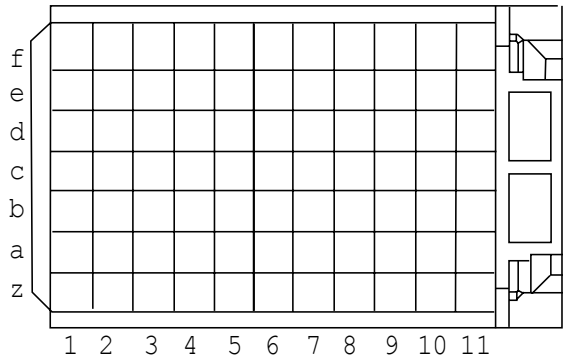

4. 95 pos. (5+2)

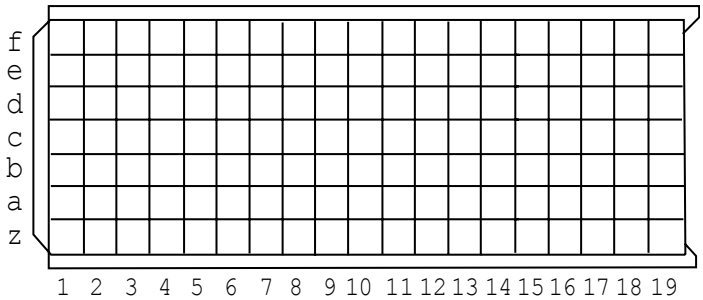

■ TRANSMISSION CHARACTERISTICS

The transmission characteristics were designed to an optimum level by repeating various transmission characteristics simulations when the structure was designed, so as to improve the transmission characteristics of this connector. The characteristic impedance and the measurement device of the connector are shown below.

Measurement Point

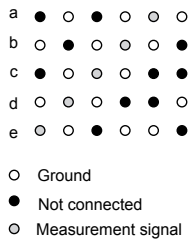

Measurement Result

	Fujitsu Components			
At Start	100 ps	300 ps	500 ps	1 ns
Frequency: Hz	1.75 GHz	580 MHz	350 MHz	175 MHz
Characteristic Impedance (Ω)	45.3 to 64.0	48.2 to 56.8	49.2 to 54.6	49.3 to 52.8
Near/Far end cross talk: %	1.96/1.14	1.49/0.78	1.06/0.51	0.71/0.27

	Other Supplier			
At Start	100 ps	300 ps	500 ps	1 ns
Frequency: Hz	1.75 GHz	580 MHz	350 MHz	175 MHz
Characteristic Impedance (Ω)	47.4 to 66.1	48.2 to 56.8	49.5 to 59.2	47.7 to 53.5
Near/Far end cross talk: %	2.24/1.41	1.57/0.98	1.14/0.67	0.78/0.35

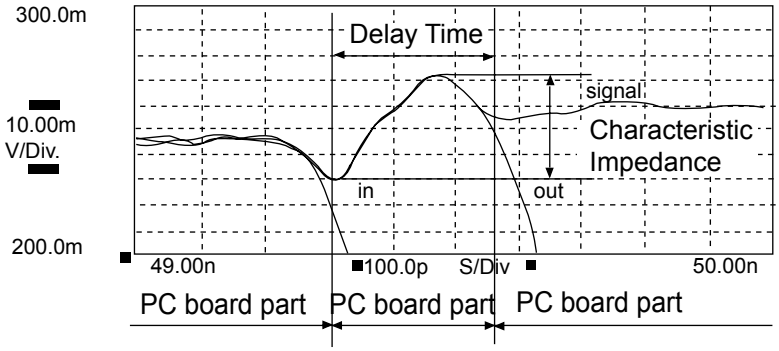

1.Measurement voltage: Vin = 5.0V
2.Rise time: Tr = 100ps, 300ps, 500ps, 1ns
3.Measurement device: TDR measurement device CSA803 and SD24 (Tektronix)
4.Measurement system

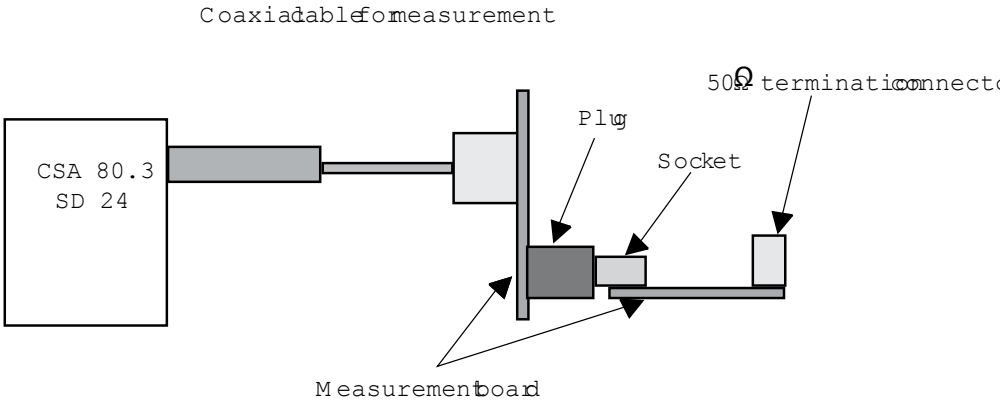

■ STANDARD AND HOT SWAP PART NUMBERS

Coding Keys for Daughter Card

FCN-086B1278 - 3.3V
or
FCN-086B2348 - 5.0V
J1

Coding Keys for Midplane/Backplane

FCN-086A3456 - 3.3V
or
FCN-086A2348 - 5.0V
P1

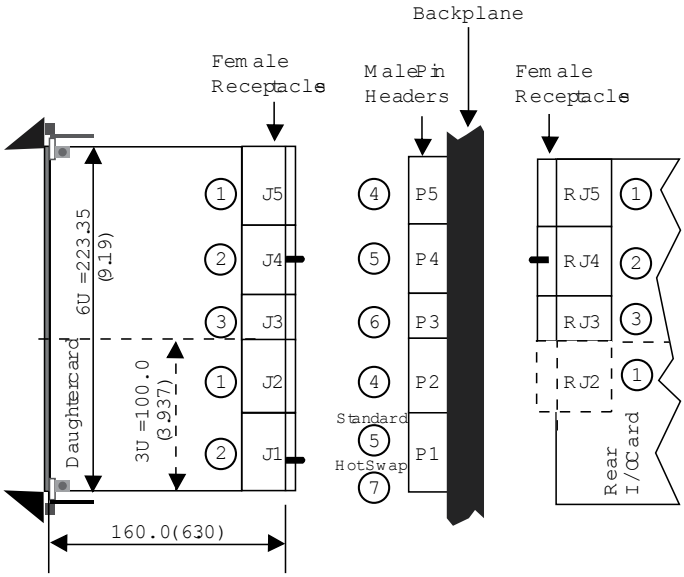

Reference Number	Part Number	Designations
1	FCN-086J110-G111A-BCR	J5, J2, RJ5, RJ2
2	FCN-086J110-G111-BCR	J4, J1, RJ4
3	FCN-086J095-G111A-BCR	J3, RJ3
4	FCN-086P154-G/111A-BCR	P5, P2
5	FCN-086P154-G/104-BCR	P4, P1
6	FCN-086P133-G/111A-BCR	P3
7	FCN-086P154-G/114-BCR	P1
8	Future Products	J4, P5
9	FCN-086P154-G/516-BCR	P4

■ COMPUTER TELEPHONY PART NUMBERS

Coding Keys for Daughter Card

FCN-086B1278 - 3.3V
or
FCN-086B2348 - 5.0V
J1
FCN-086B3567 - J4

Coding Keys for Midplane/ Backplane

FCN-086A3456 - 3.3V
or
FCN-086A2348 - 5.0V
P1
FCN-086B1248 - P4

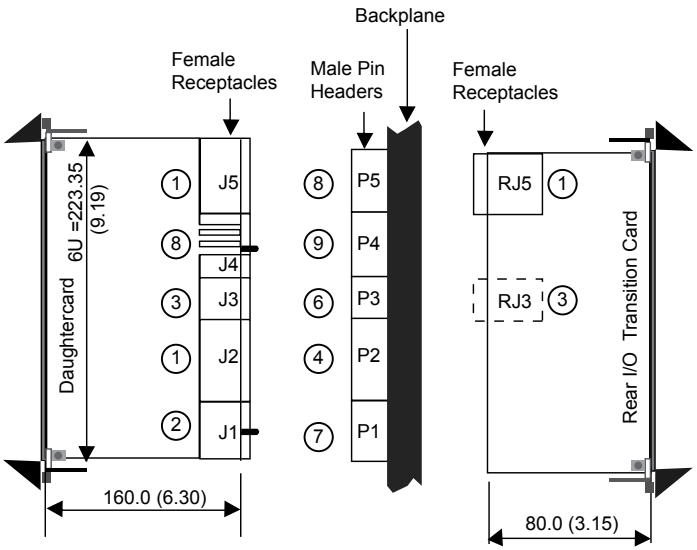

P3 TYPE 3

STRAIGHT PLUG (133 POSITIONS)

■ DIMENSIONS

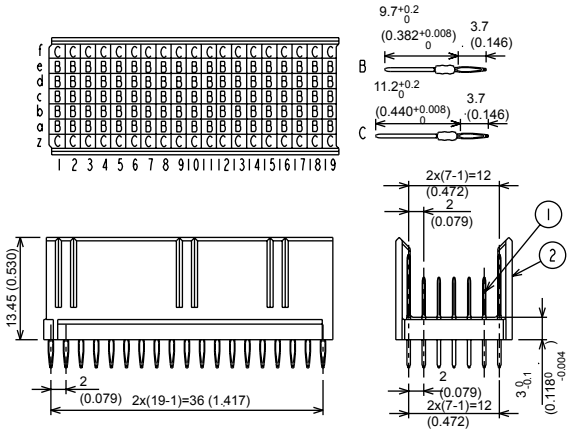

Unit: mm (in.)

■ MOUNTING HOLE LAYOUT

Thickness: 1.4 to 5.6 mm (.055 to .220 in.)
Drill hole Diameter: $\phi 0.7^{\pm 0.025}$ mm (.028 in.)
Through hole diameter (after plating): $\phi 0.6^{\pm 0.05}$ mm (.024)

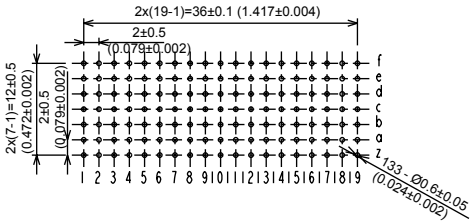

Unit: mm (in.)

■ **ORDERING PART NUMBER:** FCN-086P133-G/111A-BCR

P3 TYPE B MALE FEED THROUGH

STRAIGHT PLUG (133 POSITIONS)

■ DIMENSIONS

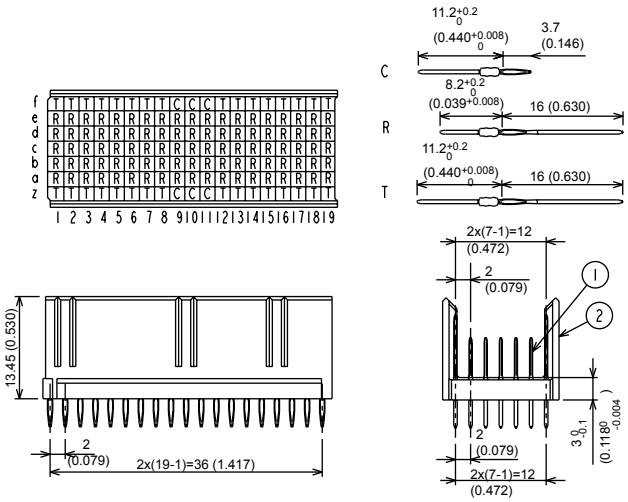

Unit: mm (in.)

■ MOUNTING HOLE LAYOUT

Thickness: 1.4 to 5.6 mm (.055 to .220 in.)
Drill hole Diameter: $\phi 0.7^{\pm 0.025}$ mm (.028 in.)

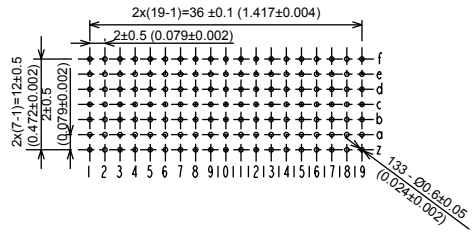

Unit: mm (in.)

■ **ORDERING PART NUMBER:** FCN-086P133-G/502A-BCR

P1/P4 TYPE A
STRAIGHT PLUG (154 POSITIONS)

■ DIMENSIONS

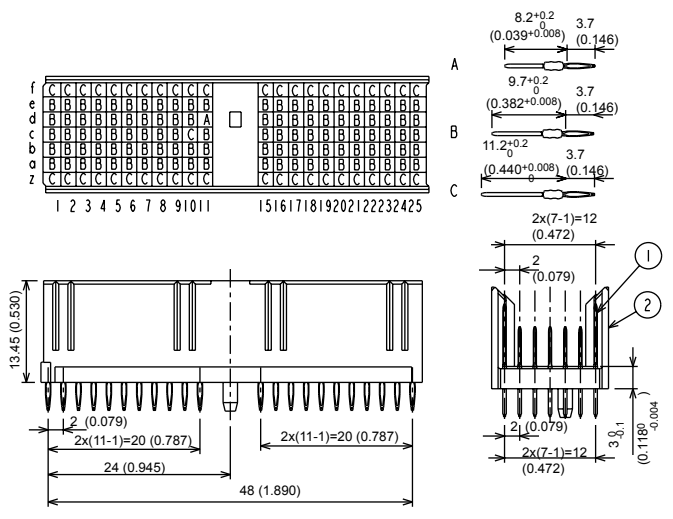

Unit: mm (in.)

■ MOUNTING HOLE LAYOUT

Thickness: 1.4 to 5.6 mm (.055 to .220 in.)
Drill hole Diameter: Ø0.7±0.025 mm (.028 in.)
Through hole diameter (after plating): Ø0.6±0.05 mm (.024)

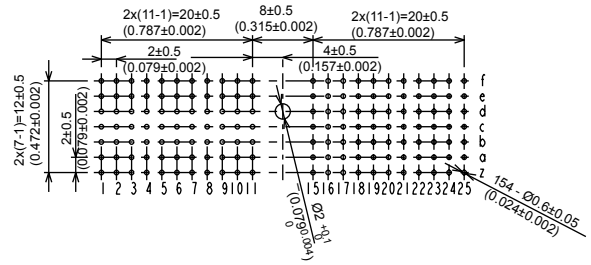

Unit: mm (in.)

■ **ORDERING PART NUMBER:** FCN-086P154-G/104-BCR

P2/P5 TYPE B
STRAIGHT PLUG (154 POSITIONS)

■ DIMENSIONS

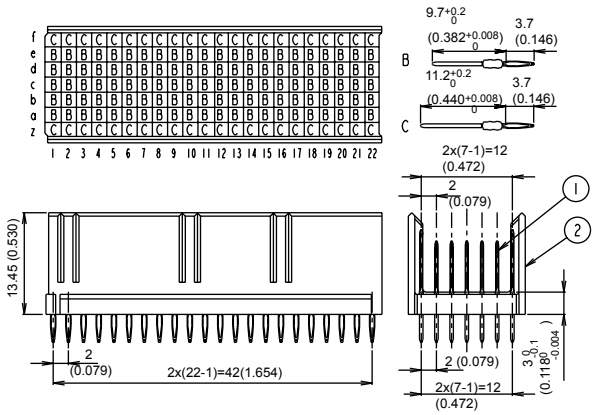

Unit: mm (in.)

■ MOUNTING HOLE LAYOUT

Thickness: 1.4 to 5.6 mm (.055 to .220 in.)
Drill hole Diameter: Ø0.7±0.025 mm (.028 in.)
Through hole diameter (after plating): Ø0.6±0.05 mm (.024)

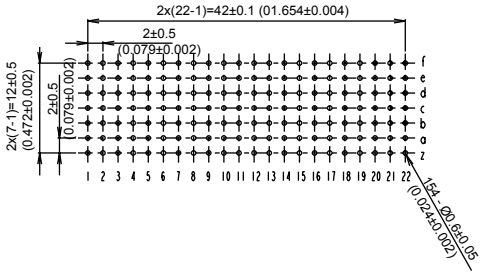

Unit: mm (in.)

■ **ORDERING PART NUMBER:** FCN-086P154-G/111A-BCR

P1 TYPE A HOT SWAP 110 SIGNAL CONNECTOR STRAIGHT PLUG (154 POSITIONS)

■ DIMENSIONS

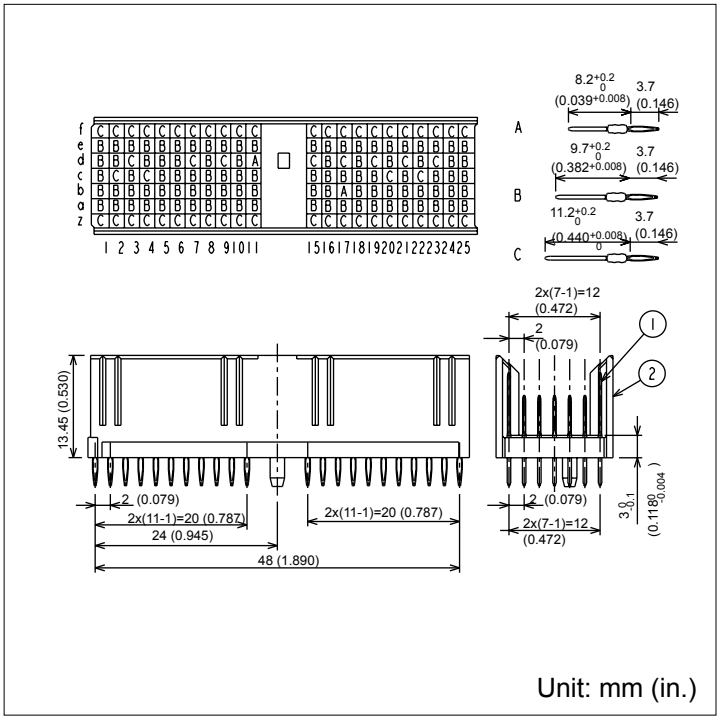

Unit: mm (in.)

■ MOUNTING HOLE LAYOUT

Thickness: 1.4 to 5.6 mm (.055 to .220 in.)
Drill hole Diameter: Ø0.7±0.025 mm (.028 in.)
Through hole diameter (after plating): Ø0.6±0.05 mm (.024)

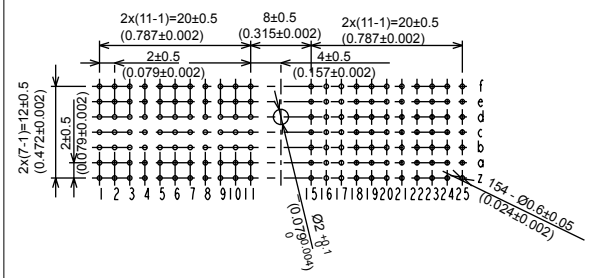

Unit: mm (in.)

■ ORDERING PART NUMBER: FCN-086P154-G/114-BCR

P4 TYPE A MALE FEED THROUGH STRAIGHT PLUG (154 POSITIONS)

■ DIMENSIONS

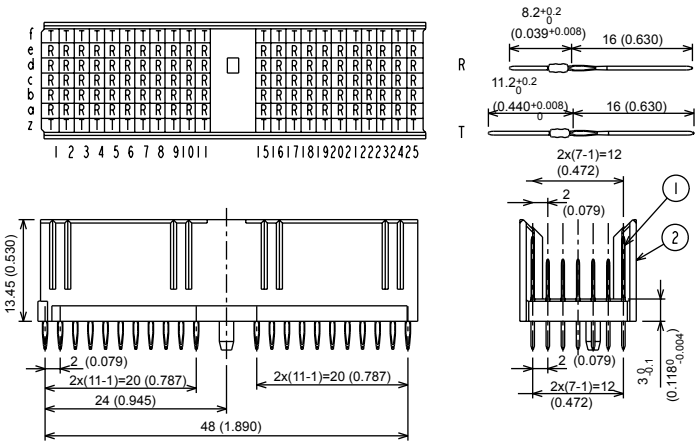

Unit: mm (in.)

■ MOUNTING HOLE LAYOUT

Thickness: 1.4 to 5.6 mm (.055 to .220 in.)
Drill hole Diameter: Ø0.7±0.025 mm (.028 in.)
Through hole diameter (after plating): Ø0.6±0.05 mm (.024)

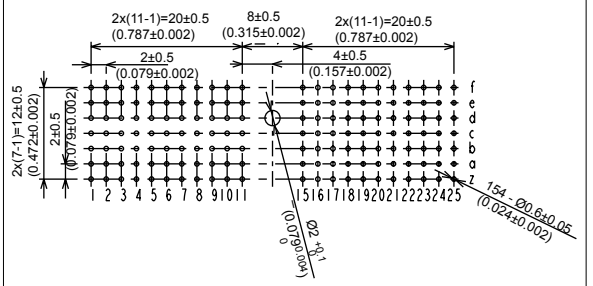

Unit: mm (in.)

■ ORDERING PART NUMBER: FCN-086P154G/401-BCR

TYPE 2 FEED THROUGH
STRAIGHT PLUG (154 POSITIONS)

■ DIMENSIONS

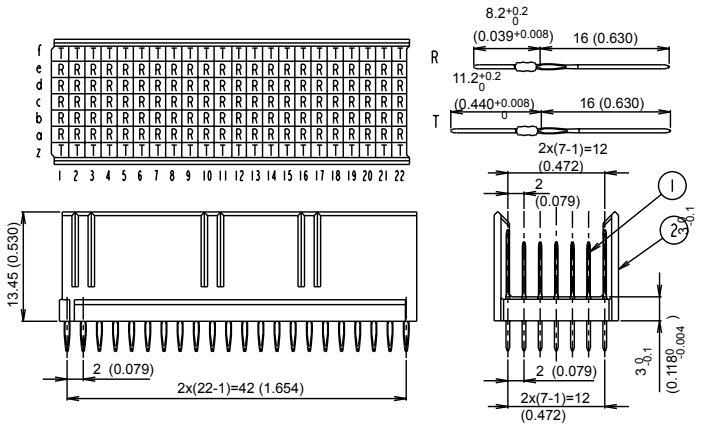

Unit: mm (in.)

■ MOUNTING HOLE LAYOUT

Thickness: 1.4 to 5.6 mm (.055 to .220 in.)
Drill hole Diameter: Ø0.7±0.025 mm (.028 in.)
Through hole diameter (after plating):
Ø0.6±0.05 mm (.024)

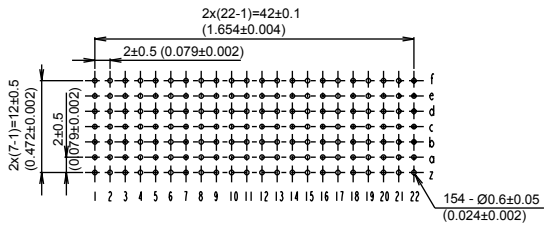

Unit: mm (in.)

■ **ORDERING PART NUMBER:** FCN-086P154-G/401A-BCR

TYPE 2 FEED THROUGH
STRAIGHT PLUG (154 POSITIONS)

■ DIMENSIONS

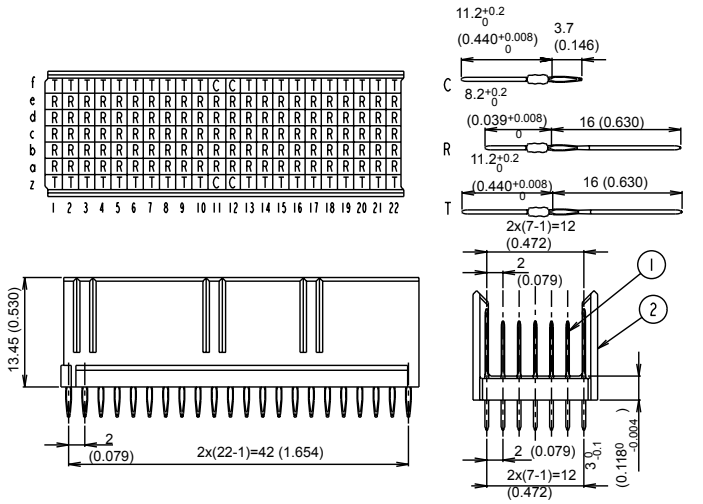

Unit: mm (in.)

■ MOUNTING HOLE LAYOUT

Thickness: 1.4 to 5.6 mm (.055 to .220 in.)
Drill hole Diameter: Ø0.7±0.025 mm (.028 in.)
Through hole diameter (after plating):
Ø0.6±0.05 mm (.024)

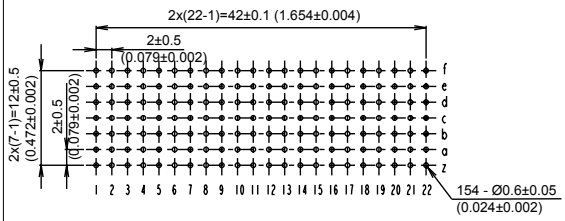

Unit: mm (in.)

■ **ORDERING PART NUMBER:** FCN-086P154-G/502A-BCR

P5 TYPE B FEED THRU COMPUTER TELEPHONY CONNECTOR

STRAIGHT PLUG (154 POSITIONS)

■ DIMENSIONS

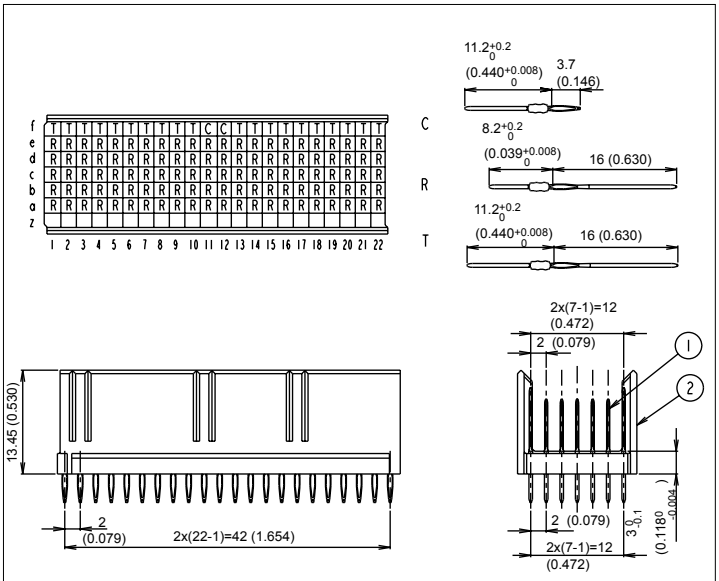

■ MOUNTING HOLE LAYOUT

Thickness: 1.4 to 5.6 mm (.055 to .220 in.)
Drill hole Diameter: Ø0.7$^{\pm 0.025}$ mm (.028 in.)
Through hole diameter (after plating): Ø0.6$^{\pm 0.05}$ mm (.024)

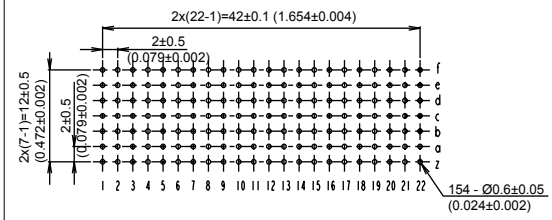

■ **ORDERING PART NUMBER:** FCN-086P154-G/503A-BCR

P4 TYPE A COMPUTER TELEPHONY CONNECTOR

STRAIGHT PLUG (154 POSITIONS)

■ DIMENSIONS

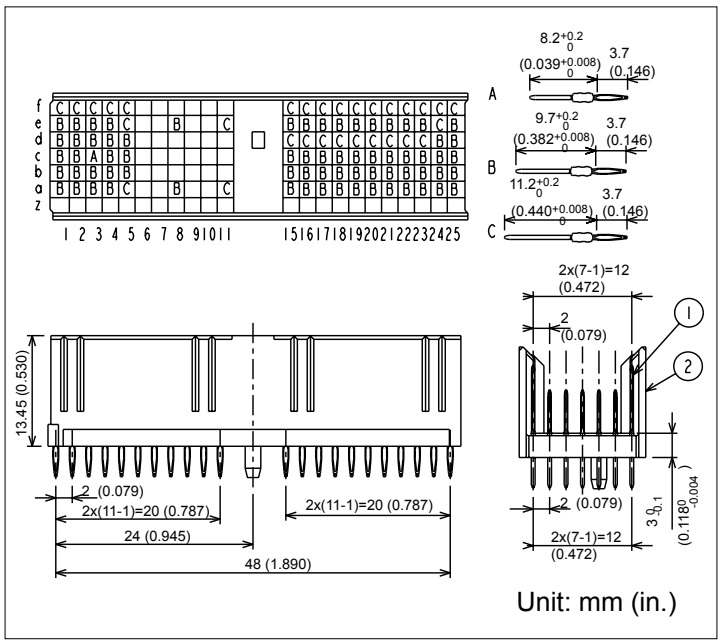

■ MOUNTING HOLE LAYOUT

Thickness: 1.4 to 5.6 mm (.055 to .220 in.)
Drill hole Diameter: Ø0.7$^{\pm 0.025}$ mm (.028 in.)
Through hole diameter (after plating): Ø0.6$^{\pm 0.05}$ mm (.024)

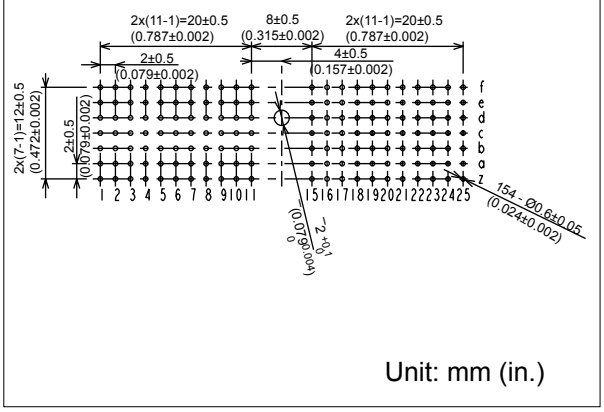

■ **ORDERING PART NUMBER:** FCN-086P154-G/516-BCR

SOCKET: 55 CONTACTS

■ DIMENSIONS

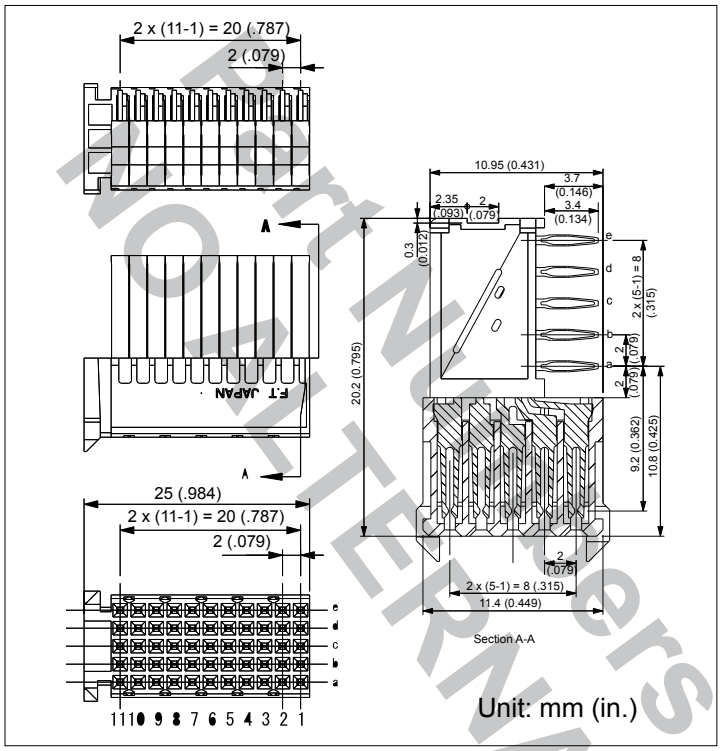

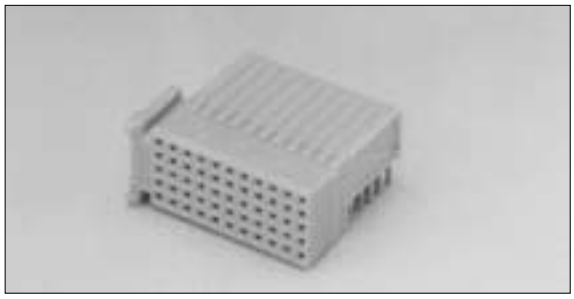

■ MOUNTING HOLE LAYOUT

Thickness: 1.4 to 2.0 mm (.055 to .220 in.)
Drill hole Diameter: Ø0.7$^{\pm 0.025}$ mm (.028 in.)
Through hole diameter (after plating): Ø0.6$^{\pm 0.05}$ mm (.024)

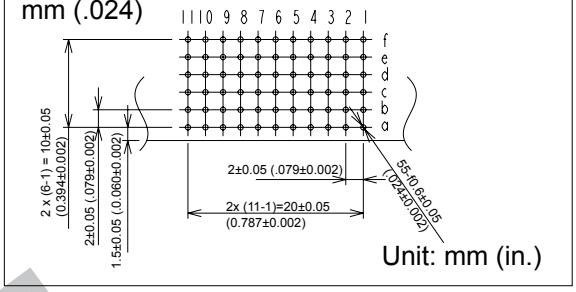

■ **ORDERING PART NUMBER:** FCN-086J055-G/101-BCR
FCN-086J055-G/111-BCR (with pre-attached upper shield)

SHIELD PLATE

■ DIMENSIONS

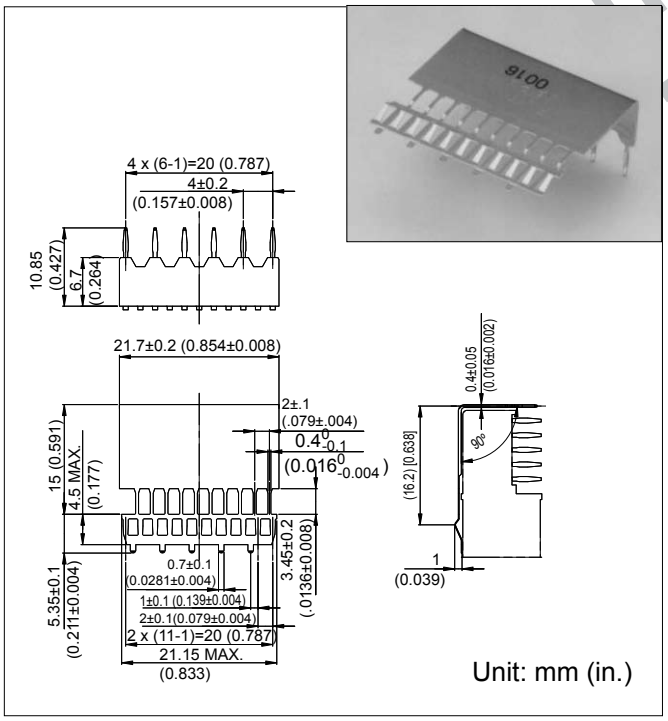

■ DIMENSIONS

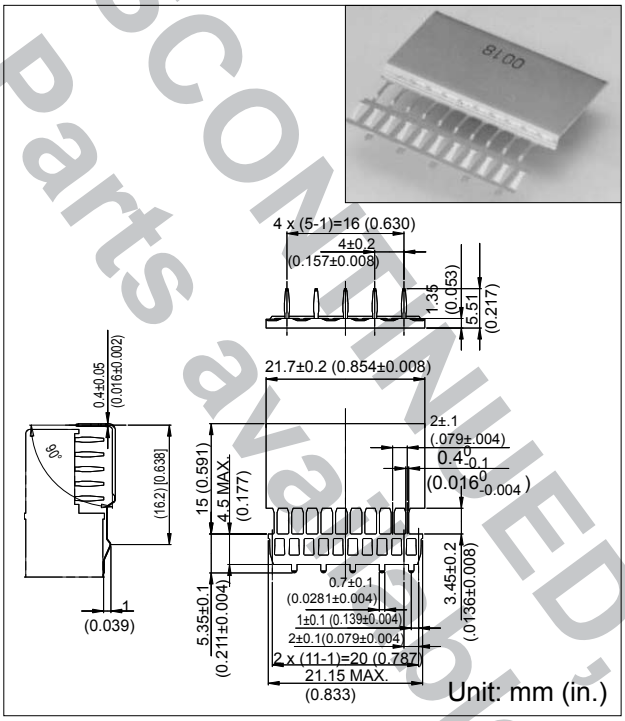

■ **ORDERING PART NUMBER:**

FCN-086J055-G/USD-BCR (top shield plate)

■ **ORDERING PART NUMBER:**

FCN-086J055-G/LSD-BCR (bottom shield plate)

Part Numbers DISCONTINUED, NO ALTERNATE Parts available

SOCKET: 86 CONTACTS

■ DIMENSIONS

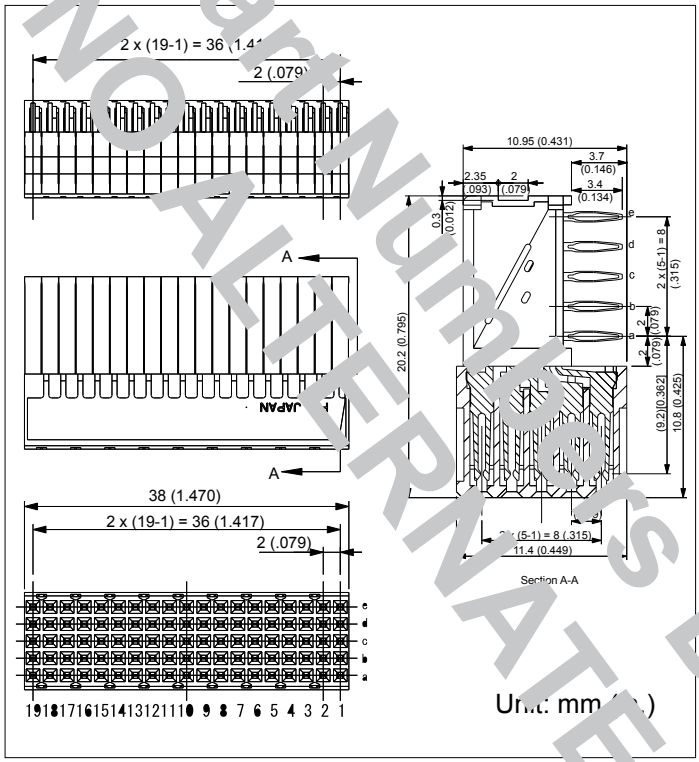

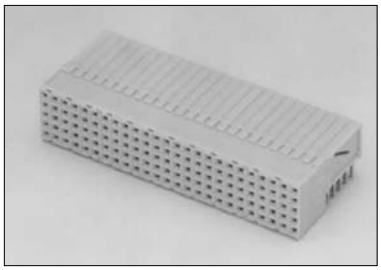

■ MOUNTING HOLE LAYOUT

Thickness: 1.4 to 2.0 mm (.055 to .220 in.)
Drill hole Diameter: Ø0.7$^{\pm0.025}$ mm (.028 in.)
Through hole diameter (after plating): Ø0.6$^{\pm0.05}$ mm (.024)

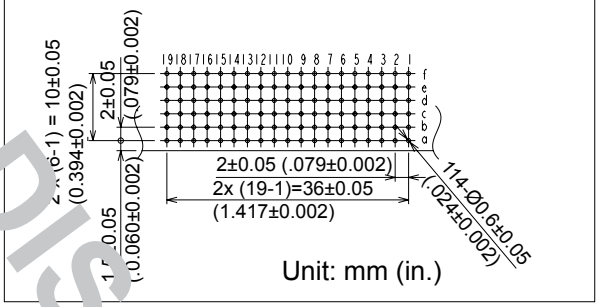

■ **ORDERING PART NUMBER:** FCN-086J095-G/011-BCR
FCN-086J095-G/11A-BCR (with pre-attached upper shield)

SHIELD PLATE

■ DIMENSIONS

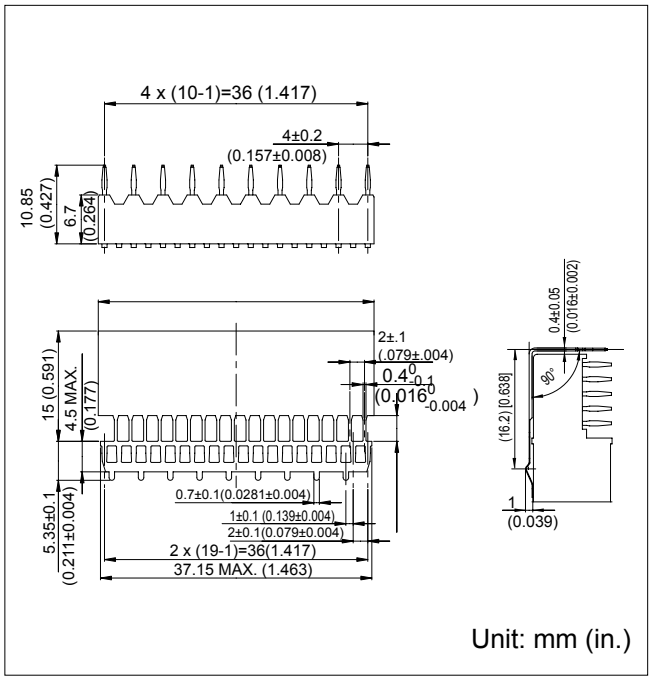

■ **ORDERING PART NUMBER:**
FCN-086J095-G/VSD-BCR (top shield plate)

■ DIMENSIONS

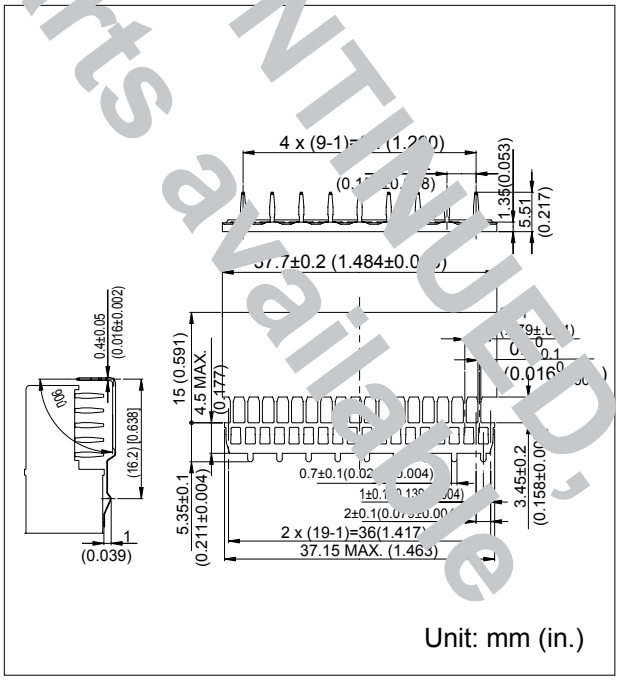

■ **ORDERING PART NUMBER:**
FCN-086J095-G/MSD-BCR (bottom shield plate)

Part Numbers Discontinued, NO ALTERNATE Parts available

SOCKET: 110 CONTACTS

■ DIMENSIONS

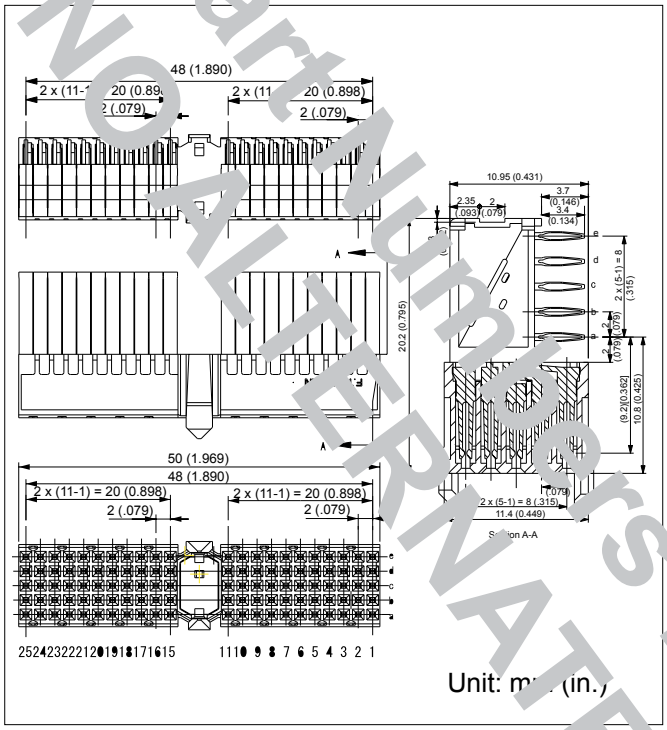

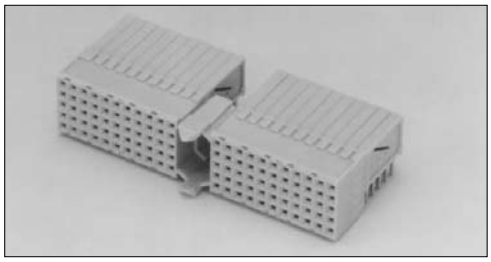

■ MOUNTING HOLE LAYOUT

Thickness: 1.4 to 2.0 mm (.055 to .220 in.)
Drill hole Diameter: Ø0.7$^{\pm 0.025}$ mm (.028 in.)
Through hole diameter (after plating): Ø0.6$^{\pm 0.05}$ mm (.024)

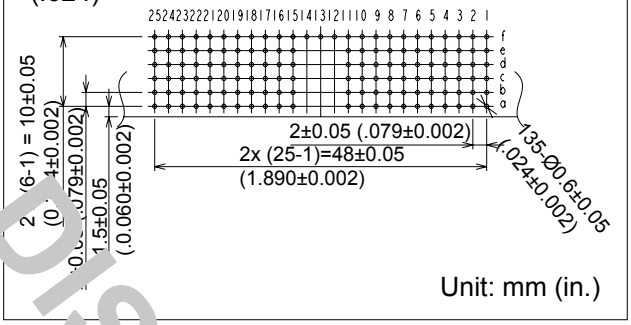

■ ORDERING PART NUMBER: FCN-086J110-G/111-BCR

FCN-086J110-G/111-BCR (with pre-attached upper shield)

SHIELD PLATE

■ DIMENSIONS

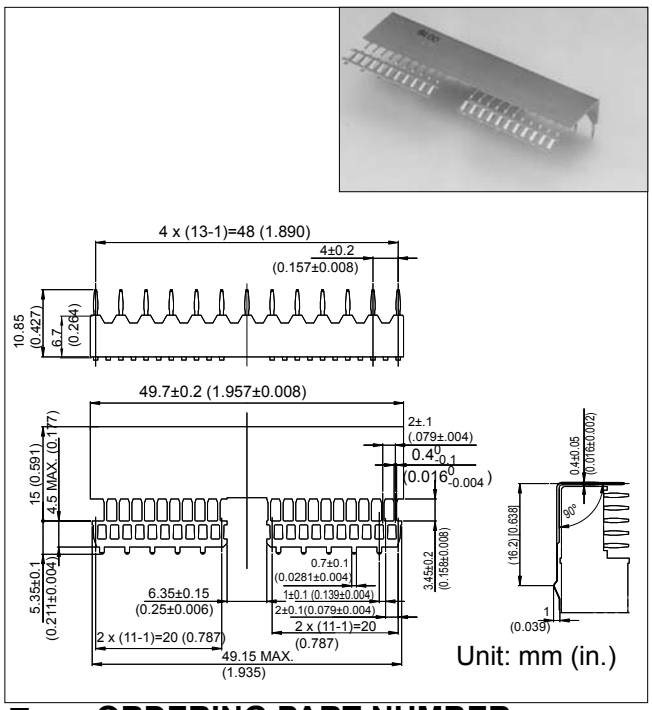

■ ORDERING PART NUMBER:

FCN-086J110-G/USD-BCR (with key, top shield plate)

■ DIMENSIONS

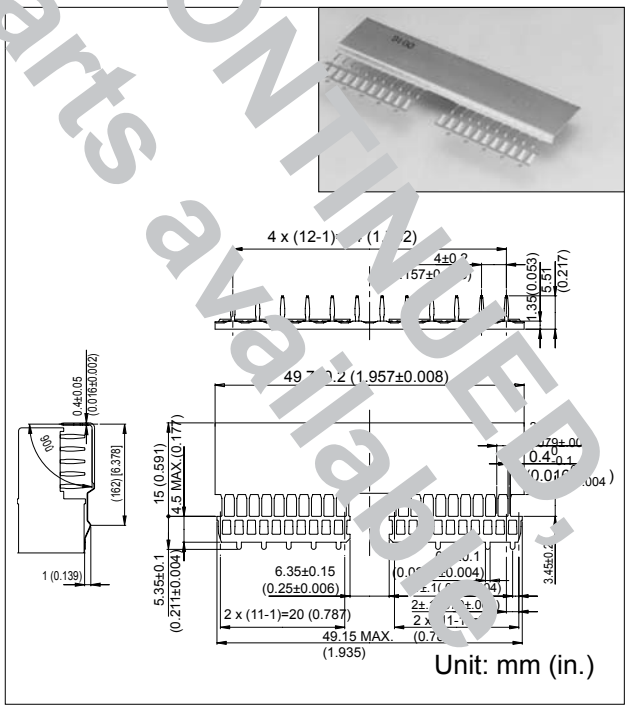

■ ORDERING PART NUMBER:

FCN-086J110-G/LSD-BCR (with key, bottom, shield plate)

Part Numbers DISCONTINUED; NO ALTERNATE Parts available

SOCKET: 110 CONTACTS WITHOUT KEY

■ DIMENSIONS

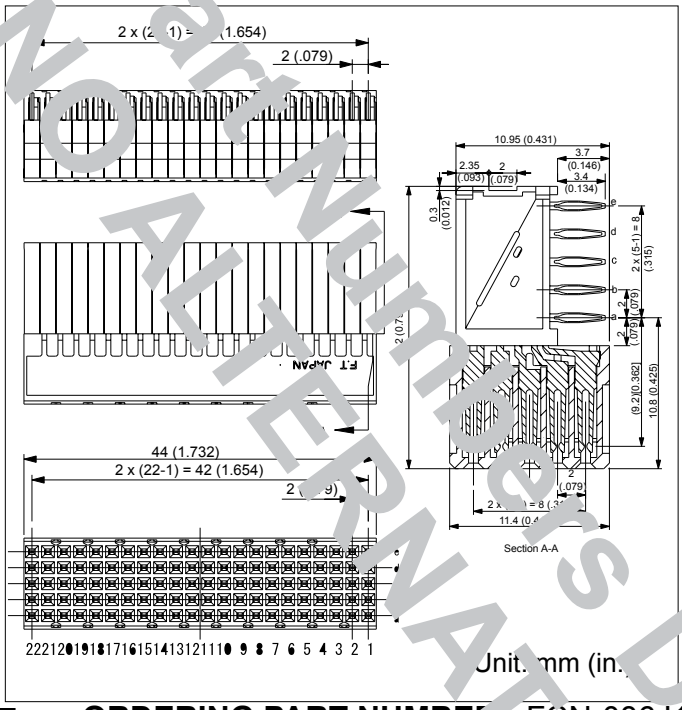

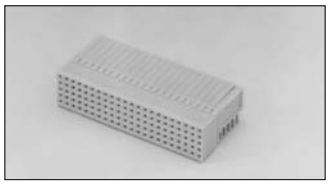

■ MOUNTING HOLE LAYOUT

Thickness: 1.4 to 2.0 mm (.055 to .220 in.)
Drill hole Diameter: ∅0.7$^{\pm0.025}$ mm (.028 in.)
Through hole diameter (after plating):
∅0.6$^{\pm0.05}$ mm (.024)

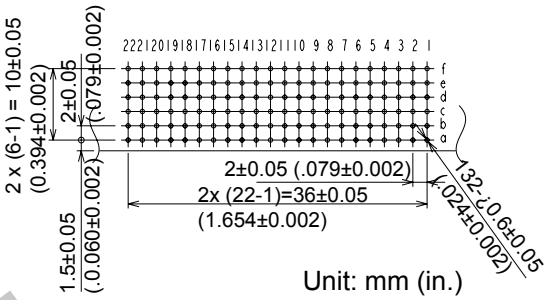

■ ORDERING PART NUMBER: FCN-086J110-G/101A-BCR

FCN-086J110-G/101A-BCR (with pre-attached upper shield)

SHIELD PLATE

■ DIMENSIONS

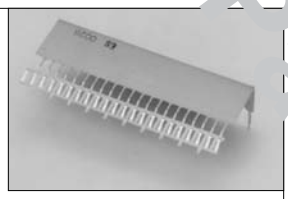

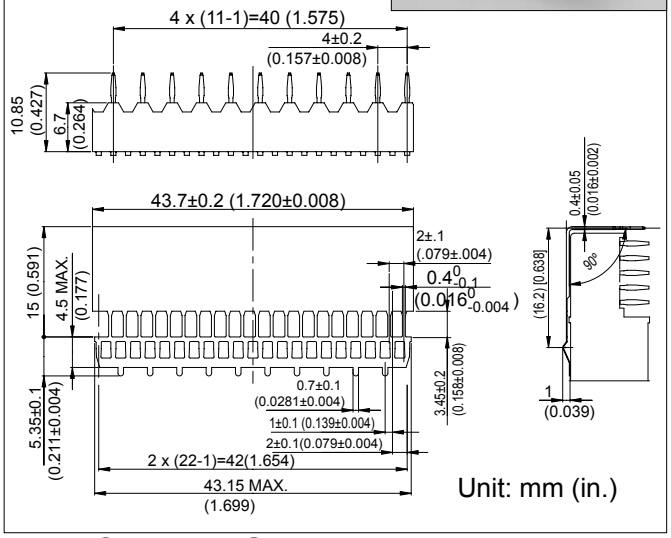

■ ORDERING PART NUMBER:

FCN-086J110-G/VSD-BCR (without key, top shield plate)

■ DIMENSIONS

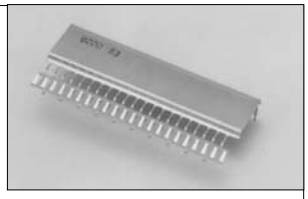

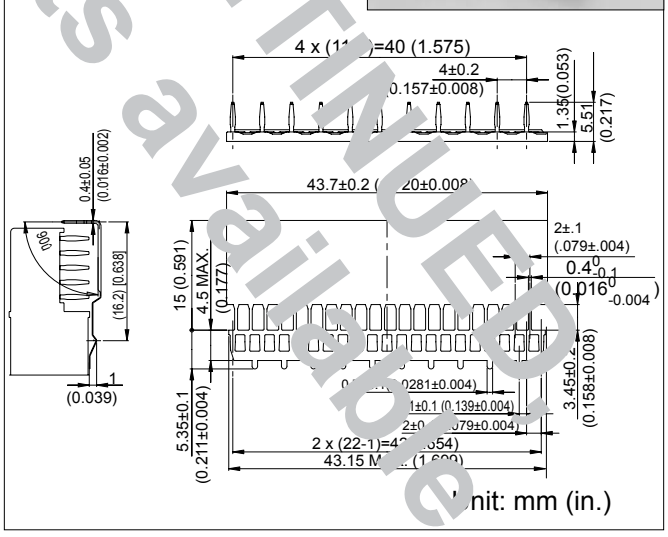

■ ORDERING PART NUMBER:

FCN-086J110-G/MSD-BCR (without key, bottom shield plate)

Part Numbers DISCONTINUED
NO ALTERNATE Parts available

Part Numbers DISCONTINUED, NO ALTERNATE Parts available

SOCKET: 125 CONTACTS

■ DIMENSIONS

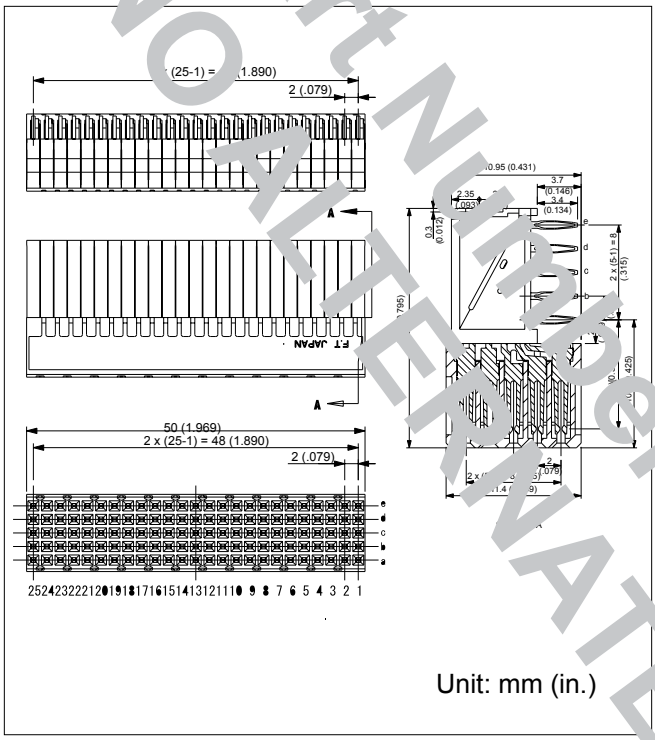

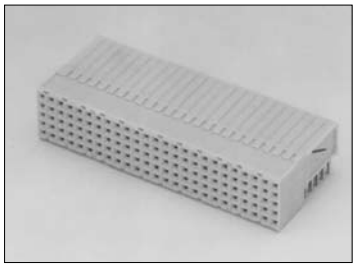

■ MOUNTING HOLE LAYOUT

Thickness: 1.4 to 2.0 mm (.055 to .220 in.)
Drill hole Diameter: ∅0.7$^{\pm 0.025}$ mm (.028 in.)
Through hole diameter (after plating):
∅0.6$^{\pm 0.05}$ mm (.024)

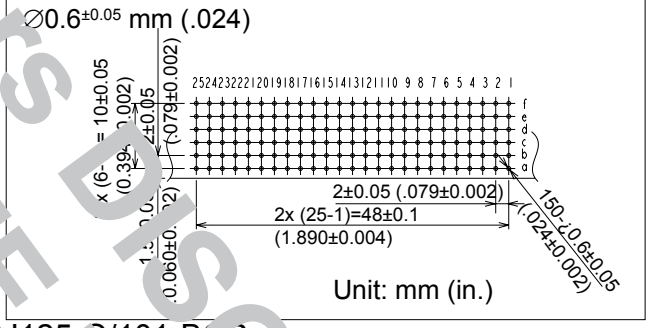

■ **ORDERING PART NUMBER:** FCN-086J125-G/101-BCR
FCN-086J125-G/111-BCR (with pre-attached upper shield)

SHIELD PLATE

■ DIMENSIONS

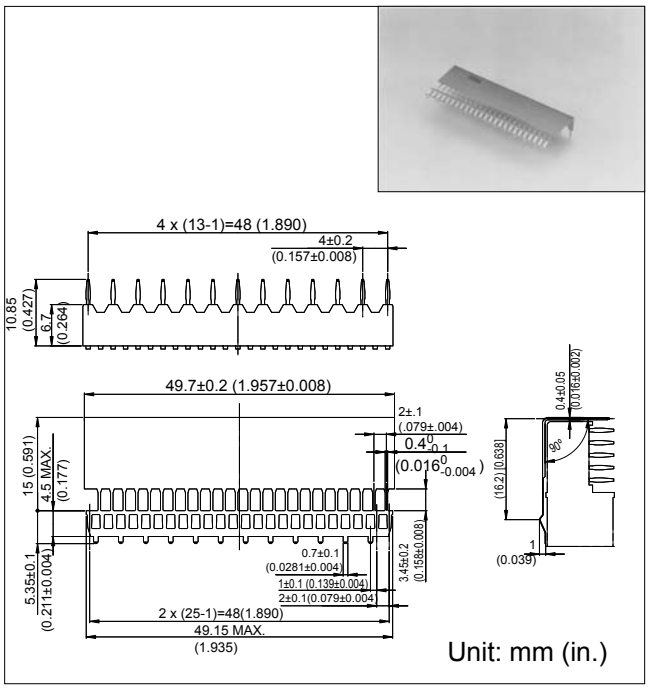

■ **ORDERING PART NUMBER:**
FCN-086J125-G/USD-BCR (top shield plate)

■ DIMENSIONS

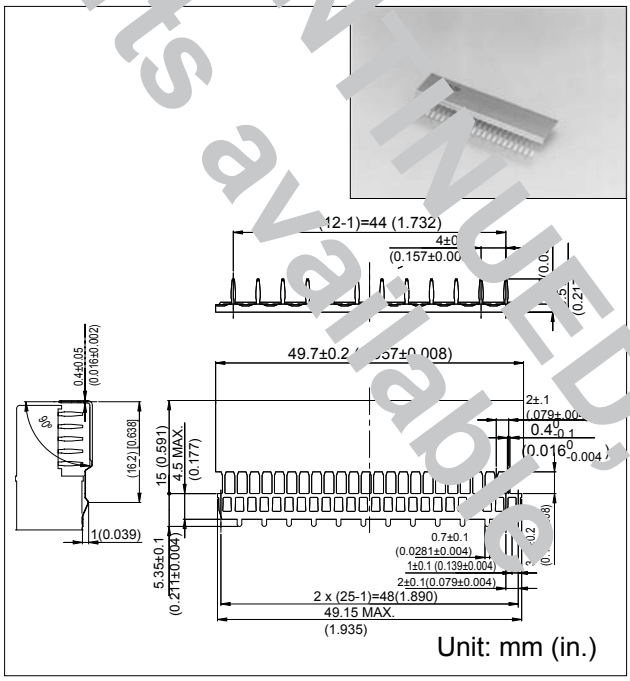

■ **ORDERING PART NUMBER:**
FCN-086J125-G/LSD-BCR (bottom shield plate)

CODING KEY

■ DIMENSIONS

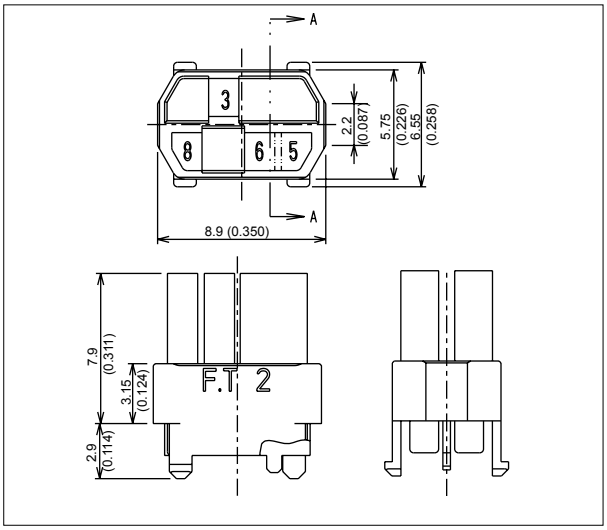

■ DIMENSIONS

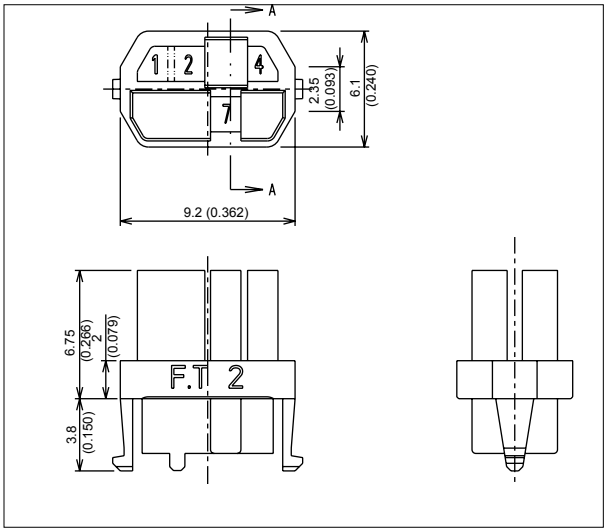

■ ORDERING PART NUMBER:

FCN-086A3568

Quanties: 50 pieces/package; minium order quanity: 500 piecs

■ ORDERING PART NUMBER:

FCN-086B1247

■ COMBINATION OF CODING KEYS

Plug	Jack	Color
1236	4578	Nut brown
1238	4567	Ultramarine blue
1248	3567	Strawberry red
1268	3457	Olive yellow
1567	2348	Brilliant blue

Plug	Jack	Color
2578	1346	Reseda green
3467	1258	Slate gray
3567	1248	Antique pink
3568	1247	Pastel orange

■ ORDERING PART NUMBERs:

Plug Coding Key: FCN-086A****

Jack Coding Key: FCN-086B****

****: Add Coding Key number: eg: FCN-086A1268

Fujitsu Components International Headquarter Offices

Japan
Fujitsu Component Limited
Gotanda-Chuo Building
3-5, Higashigotanda 2-chome, Shinagawa-ku
Tokyo 141, Japan
Tel: (81-3) 5449-7010
Fax: (81-3) 5449-2626
Email: promothq@ft.ed.fujitsu.com
Web: www.fcl.fujitsu.com

Europe
Fujitsu Components Europe B.V.
Diamantlaan 25
2132 WV Hoofddorp
Netherlands
Tel: (31-23) 5560910
Fax: (31-23) 5560950
Email: info@fceu.fujitsu.com
Web: emea.fujitsu.com/components/

North and South America
Fujitsu Components America, Inc.
250 E. Caribbean Drive
Sunnyvale, CA 94089 U.S.A.
Tel: (1-408) 745-4900
Fax: (1-408) 745-4970
Email: components@us.fujitsu.com
Web: http://us.fujitsu.com/components/

Asia Pacific
Fujitsu Components Asia Ltd.
102E Pasir Panjang Road
#01-01 Citilink Warehouse Complex
Singapore 118529
Tel: (65) 6375-8560
Fax: (65) 6273-3021
Email: fcal@fcal.fujitsu.com
Web: http://www.fujitsu.com/sg/services/micro/components/

©2007 Fujitsu Components America, Inc. All rights reserved. All trademarks or registered trademarks are the property of their respective owners.

Fujitsu Components America or its affiliates do not warrant that the content of datasheet is error free. In a continuing effort to improve our products Fujitsu Components America, Inc. or its affiliates reserve the right to change specifications/datasheets without prior notice.
Rev. August 15, 2007

OCEAN CHIPS
Океан Электроники
Поставка электронных компонентов

Компания «Океан Электроники» предлагает заключение долгосрочных отношений при поставках импортных электронных компонентов на взаимовыгодных условиях!

Наши преимущества:

- Поставка оригинальных импортных электронных компонентов напрямую с производств Америки, Европы и Азии, а так же с крупнейших складов мира;
- Широкая линейка поставок активных и пассивных импортных электронных компонентов (более 30 млн. наименований);
- Поставка сложных, дефицитных, либо снятых с производства позиций;
- Оперативные сроки поставки под заказ (от 5 рабочих дней);
- Экспресс доставка в любую точку России;
- Помощь Конструкторского Отдела и консультации квалифицированных инженеров;
- Техническая поддержка проекта, помощь в подборе аналогов, поставка прототипов;
- Поставка электронных компонентов под контролем ВП;
- Система менеджмента качества сертифицирована по Международному стандарту ISO 9001;
- При необходимости вся продукция военного и аэрокосмического назначения проходит испытания и сертификацию в лаборатории (по согласованию с заказчиком);
- Поставка специализированных компонентов военного и аэрокосмического уровня качества (Xilinx, Altera, Analog Devices, Intersil, Interpoint, Microsemi, Actel, Aeroflex, Peregrine, VPT, Syfer, Eurofarad, Texas Instruments, MS Kennedy, Miteq, Cobham, E2V, MA-COM, Hittite, Mini-Circuits, General Dynamics и др.);

Компания «Океан Электроники» является официальным дистрибьютором и эксклюзивным представителем в России одного из крупнейших производителей разъемов военного и аэрокосмического назначения **«JONHON»**, а так же официальным дистрибьютором и эксклюзивным представителем в России производителя высокотехнологичных и надежных решений для передачи СВЧ сигналов **«FORSTAR»**.

AVIC JONHON

«JONHON» (основан в 1970 г.)

Разъемы специального, военного и аэрокосмического назначения:

(Применяются в военной, авиационной, аэрокосмической, морской, железнодорожной, горно- и нефтедобывающей отраслях промышленности)

«FORSTAR» (основан в 1998 г.)

ВЧ соединители, коаксиальные кабели, кабельные сборки и микроволновые компоненты:

(Применяются в телекоммуникациях гражданского и специального назначения, в средствах связи, РЛС, а так же военной, авиационной и аэрокосмической отраслях промышленности).

FORSTAR®

Телефон: 8 (812) 309-75-97 (многоканальный)
Факс: 8 (812) 320-03-32
Электронная почта: ocean@oceanchips.ru
Web: http://oceanchips.ru/
Адрес: 198099, г. Санкт-Петербург, ул. Калинина, д. 2, корп. 4, лит. А