SINGLE GENERAL PURPOSE LOW VOLTAGE COMPARATOR AZV331

General Description

The AZV331 is a low voltage 2.5V to 5.5V, single comparator, which has a very low supply current of 60μA, making the part an excellent choice for portable electronic systems. The device is pin-for-pin compatible replacement of the LMV331.

The AZV331 is built with BiCMOS process with bipolar input and output stages for improved noise performance. It is a cost-effective solution for portable consumer products where space, low voltage, low power and price are the primary specification in circuit design.

The AZV331 is available in space saving SC-70-5 and SOT-23-5 packages, the SC-70-5 is approximately half the size of the SOT-23-5.

Features

- Guaranteed 2.5V to 5.5V Performance.
- Industrial Temperature Range: -40ºC to 85ºC
- Low Supply Current: 60μA Typical
- Input Common Mode Voltage Range Includes Ground
- Low Output Saturation Voltage 200 mV Typical
- Open Collector Output for Maxima Flexibility
- Space Saving SC-70-5 and SOT-23-5 Packages

Applications

- Notebook and PDA
- Low Power, Low Voltage Applications
- General Purpose Portable Devices
- Mobile Communication
- Battery-Powered Systems

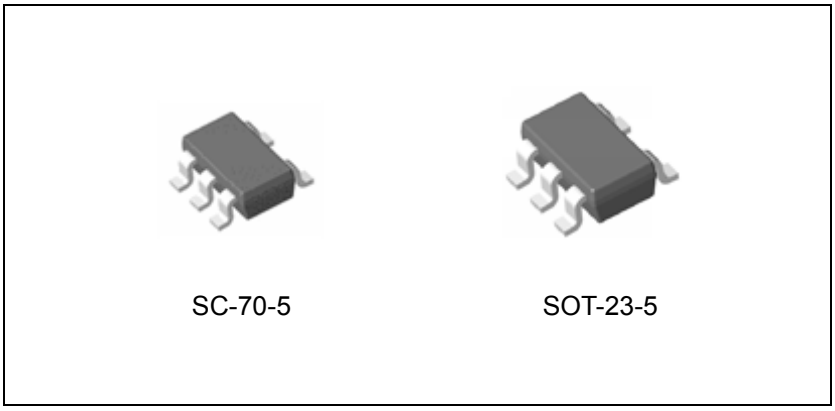

Figure 1. Package Types of AZV331

Pin Configuration

KS/K Package

(SC-70-5/SOT-23-5)

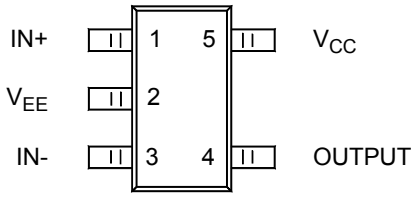

Figure 2. Pin Configuration of AZV331 (Top View)

Functional Block Diagram

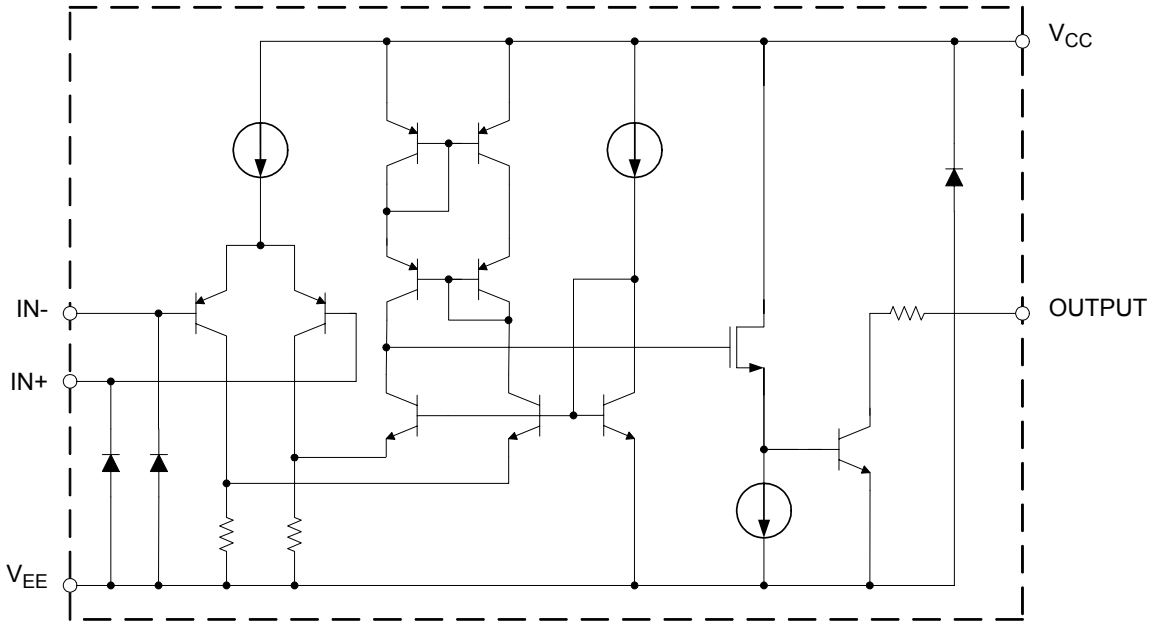

Figure 3. Functional Block Diagram of AZV331

Ordering Information

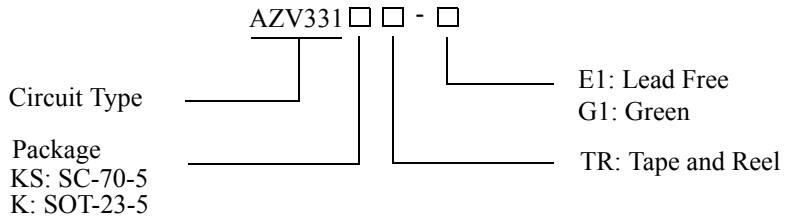

Package	Temperature Range	Part Number		Marking ID		Packing Type
		Lead Free	Green	Lead Free	Green	
SC-70-5	-40 to 85°C	AZV331KSTR-E1	AZV331KSTR-G1	22	B2	Tape & Reel
SOT-23-5	-40 to 85°C	AZV331KTR-E1	AZV331KTR-G1	E6S	G6S	Tape & Reel

BCD Semiconductor's Pb-free products, as designated with "E1" suffix in the part number, are RoHS compliant. Products with "G1" suffix are available in green packages.

Absolute Maximum Ratings (Note 1)

Parameter	Symbol	Value	Unit
Power Supply Voltage	V_{CC}	6	V
Operation Junction Temperature	T_J	150	°C
Storage Temperature Range	T_{STG}	-65 to 150	°C
Lead Temperature (Soldering, 10 Seconds)	T_{LEAD}	260	°C
ESD (Machine Model)		300	V
ESD (Human Body Model)		4000	V

Note 1: Stresses greater than those listed under "Absolute Maximum Ratings" may cause permanent damage to the device. These are stress ratings only, and functional operation of the device at these or any other conditions beyond those indicated under "Recommended Operating Conditions" is not implied. Exposure to "Absolute Maximum Ratings" for extended periods may affect device reliability.

Recommended Operating Conditions

Parameter	Symbol	Min	Max	Unit
Supply Voltage	V_{CC}	2.5	5.5	V
Ambient Operating Temperature Range	T_A	-40	85	°C

2.7V DC Electrical Characteristics

Limits in standard typeface are guaranteed for T_A=25°C, V_{CC}=2.7V, V_{EE}=0V, R_L=5.1kΩ connected to V_{CC} and V_{CM}=0, **bold** typeface applies over full temperature ranges, unless otherwise specified.

Parameter	Symbol	Conditions	Min	Typ	Max	Unit
Input Offset Voltage	V_{OS}			1.7	7	mV
					9	
Input Offset Voltage Average Drift	TCV_{OS}			5		μV/°C
Input Bias Current	I_B	I_{IN}+ or I_{IN}- with output in linear range, V_{CM}=0V		10	250	nA
					400	
Input Offset Current	I_{IO}	I_{IN}+ - I_{IN}-, V_{CM}=0V		5	50	nA
					150	
Saturation Voltage	V_{SAT}	I_{SINK}≤1mA		200		mV
					500	
Output Sink Current	I_{SINK}	V_O≤1.5V	5	23		mA
Input Common-Mode Voltage Range	V_{CM}		-0.1		2	V
Supply Current	I_{CC}			40	100	μA
					150	
Output Leakage Current	$I_{LEAKAGE}$			0.003		μA

2.7V AC Electrical Characteristics

All limits are guaranteed for T_A=25°C, V_{CC}=2.7V, V_{EE}=0V, R_L=5.1kΩ connected to V_{CC} and V_{CM}=0, unless otherwise specified.

Parameter	Symbol	Conditions	Min	Typ	Max	Unit
Propagation Delay (High to Low)	T_{PHL}	Input Overdrive=10mV		1000		ns
		Input Overdrive=100mV		350		
Propagation Delay (Low to High)	T_{PLH}	Input Overdrive=10mV		500		ns
		Input Overdrive=100mV		400		

5V DC Electrical Characteristics

Limits in standard typeface are guaranteed for T_A=25°C, V_{CC}=5V, V_{EE}=0V, R_L=5.1kΩ connected to V_{CC} and V_{CM}=0, **bold** typeface applies over full temperature ranges, unless otherwise specified.

Parameter	Symbol	Conditions	Min	Typ	Max	Unit
Input Offset Voltage	V_{OS}			1.7	7	mV
					9	
Input Offset Voltage Average Drift	TCV_{OS}			5		μV/°C
Input Bias Current	I_B	I_{IN}+ or I_{IN}- with output in linear range, V_{CM}=0V		25	250	nA
					400	
Input Offset Current	I_{IO}	I_{IN}+ - I_{IN}-, V_{CM}=0V		2	50	nA
					150	
Saturation Voltage	V_{SAT}	I_{SINK}≤4mA		200	400	mV
					500	
Output Sink Current	I_{SINK}	V_O≤1.5V	10	84		mA
Input Common-Mode Voltage Range	V_{CM}		-0.1		4.2	V
Voltage Gain	A_V		20	50		V/mV
Supply Current	I_{CC}			60	120	μA
					150	
Output Leakage Current	$I_{LEAKAGE}$			0.003		μA

5V AC Electrical Characteristics

All limits are guaranteed for T_A=25°C, V_{CC}=5V, V_{EE}=0V, R_L=5.1kΩ connected to V_{CC} and V_{CM}=0, unless otherwise specified.

Parameter	Symbol	Conditions	Min	Typ	Max	Unit
Propagation Delay (High to Low)	T_{PHL}	Input Overdrive=10mV		600		ns
		Input Overdrive=100mV		200		
Propagation Delay (Low to High)	T_{PLH}	Input Overdrive=10mV		450		ns
		Input Overdrive=100mV		300		

Typical Performance Characteristics

T_A=25°C, unless otherwise specified.

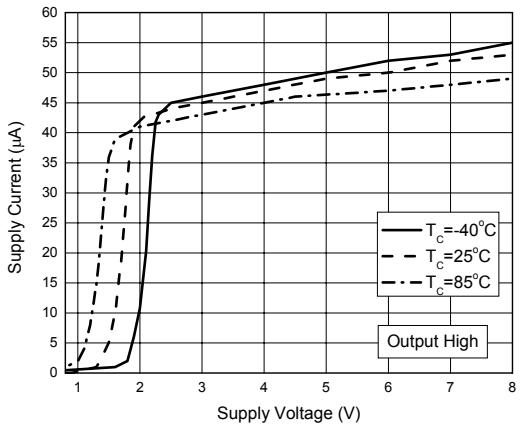

Figure 4. Supply Current vs. Supply Voltage

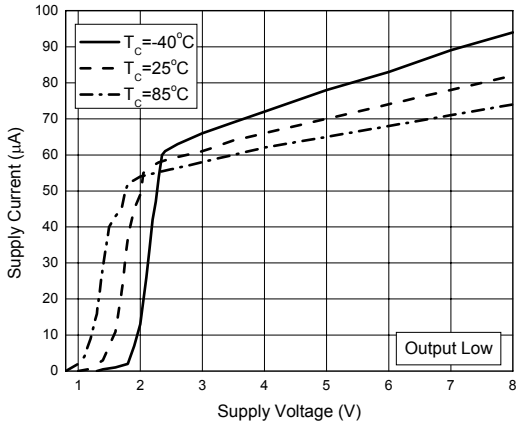

Figure 5. Supply Current vs. Supply Voltage

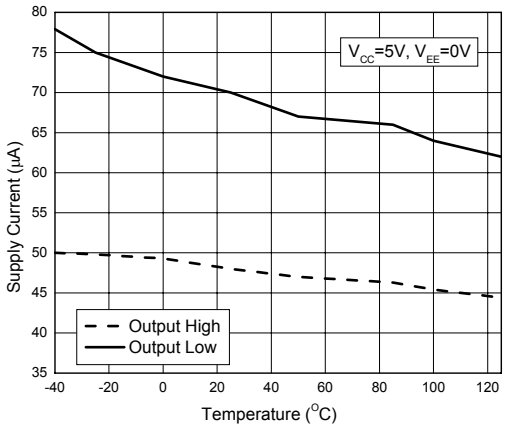

Figure 6. Supply Current vs. Temperature

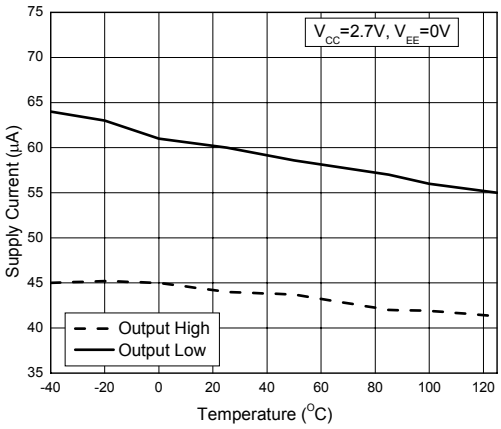

Figure 7. Supply Current vs. Temperature

Typical Performance Characteristics (Continued)

T_A=25°C, unless otherwise specified.

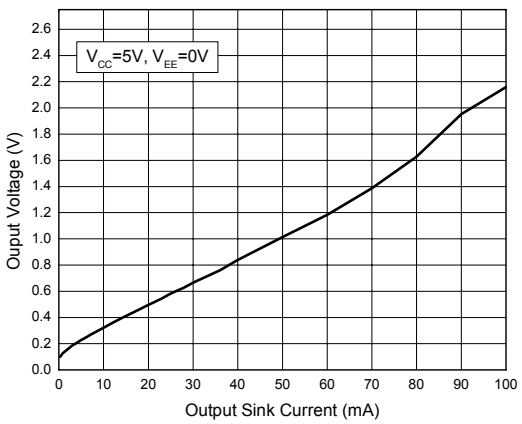

Figure 8. Output Voltage vs. Output Sink Current

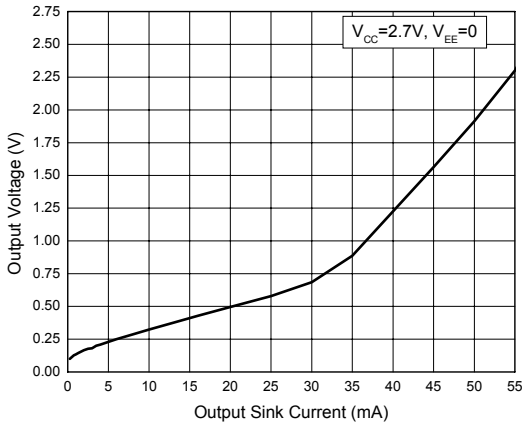

Figure 9. Output Voltage vs. Output Sink Current

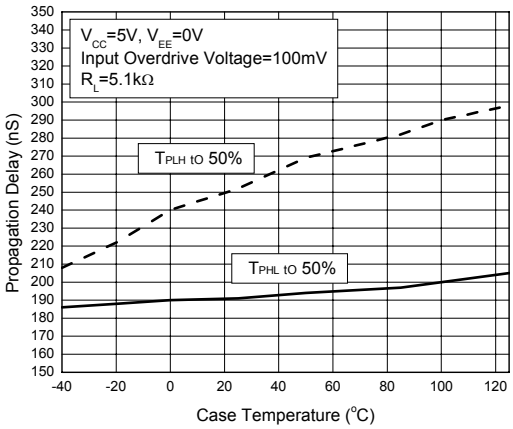

Figure 10. Propagation Delay vs. Temperature

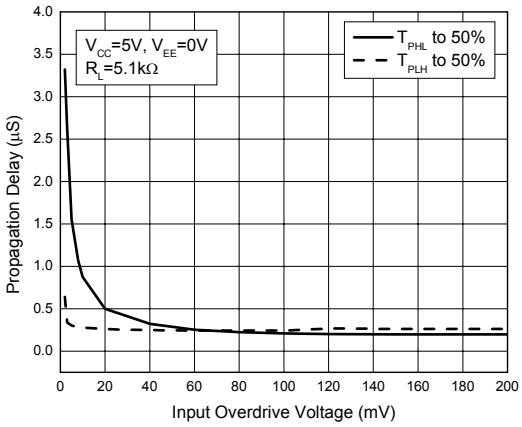

Figure 11. Propagation Delay vs. Input Overdrive Voltage

Typical Performance Characteristics (Continued)

T_A=25°C, unless otherwise specified.

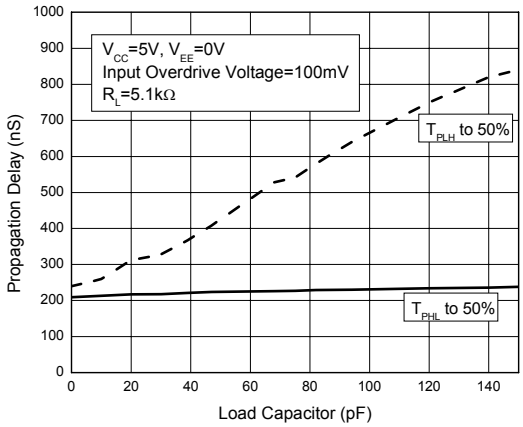

Figure 12. Propagation Delay vs. Load Capacitors

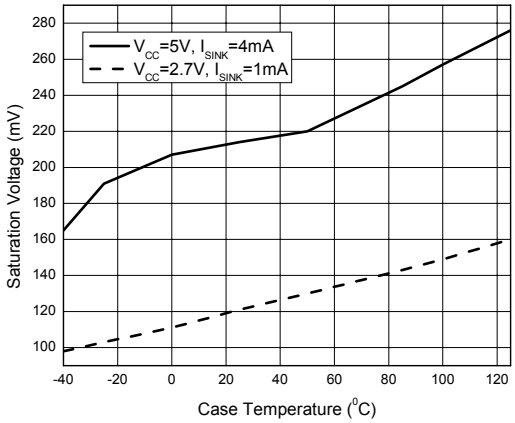

Figure 13. Saturation Voltage vs. Case Temperature

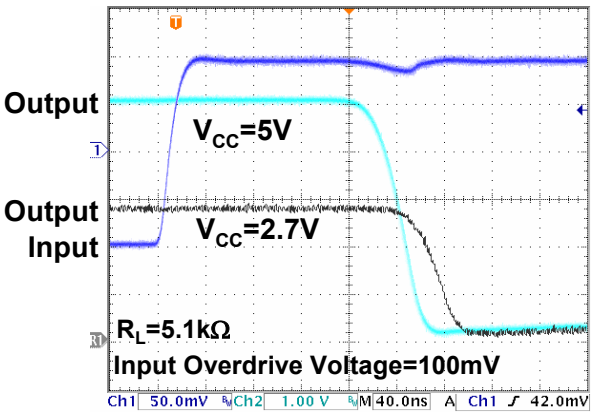

Figure 14. Response Time for Positive Transition

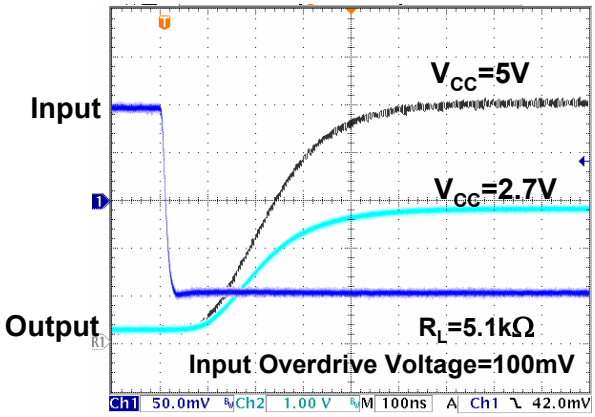

Figure 15. Response Time for Negative Transition

Typical Performance Characteristics (Continued)

T_A=25°C, unless otherwise specified.

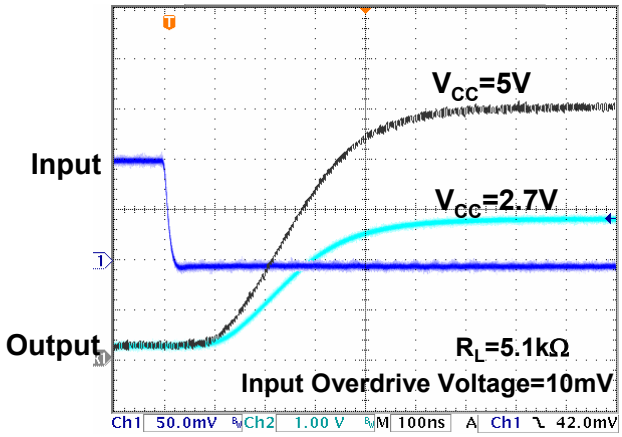

Figure 16. Response Time for Negative Transition

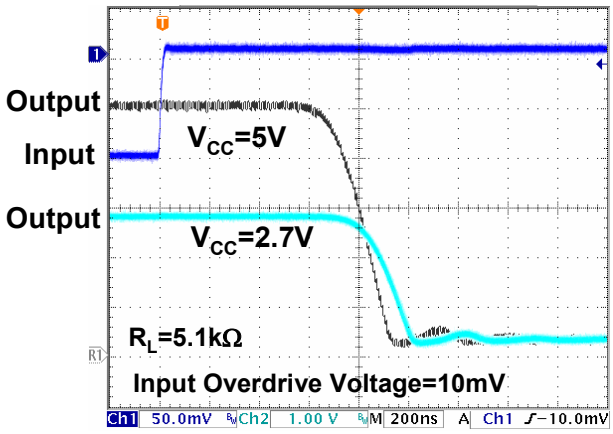

Figure 17. Response Time for Positive Transition

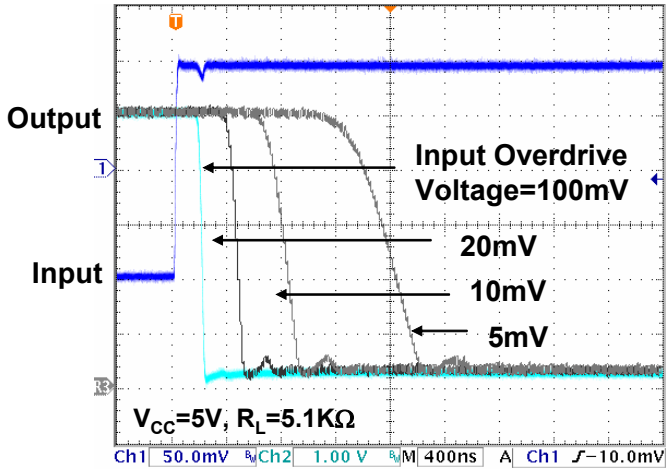

Figure 18. Response Time for Positive Transition

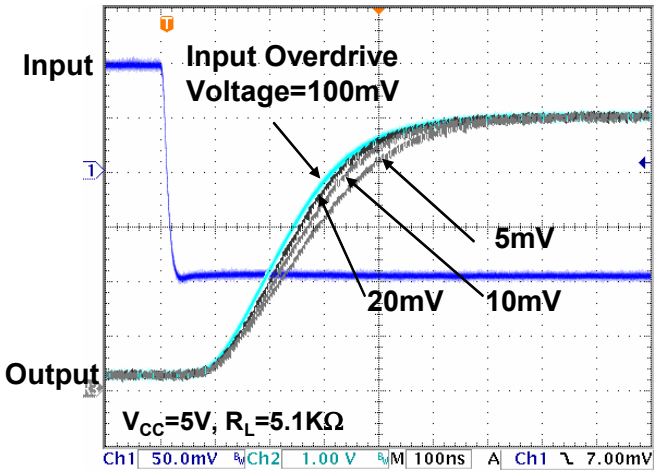

Figure 19. Response Time for Negative Transition

Typical Performance Characteristics (Continued)

T_A=25°C, unless otherwise specified.

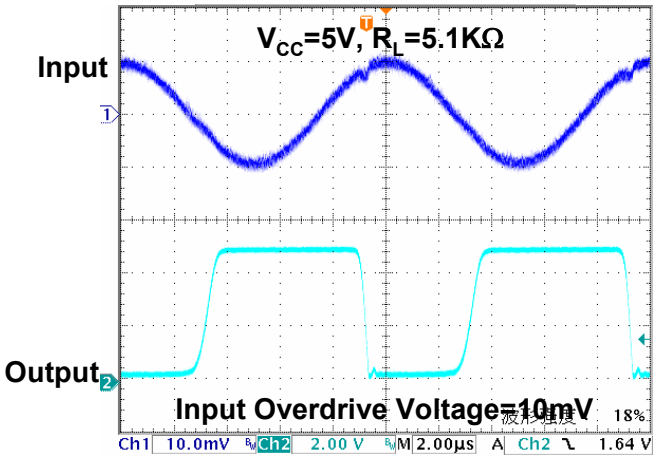

Figure 20. 100kHz Response

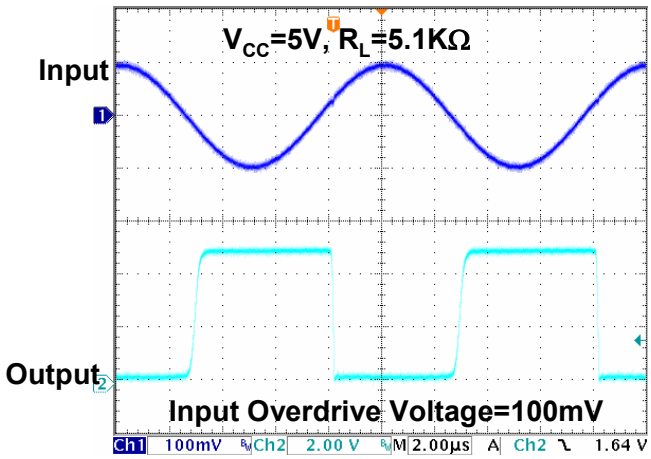

Figure 21. 100kHz Response

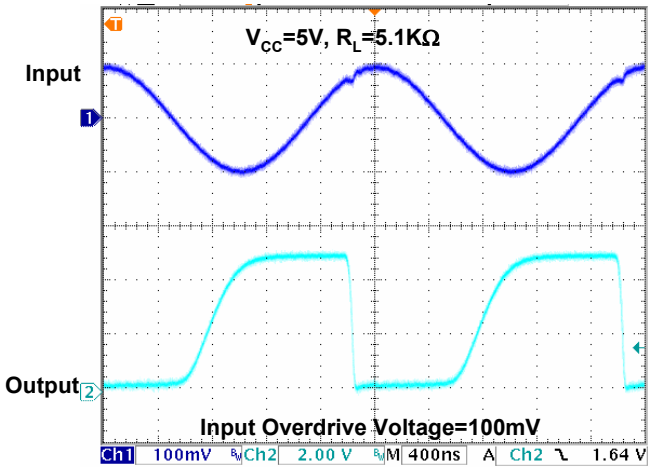

Figure 22. 500kHz Response

Typical Application

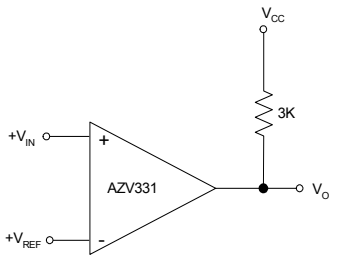

Figure 23. Basic Comparator

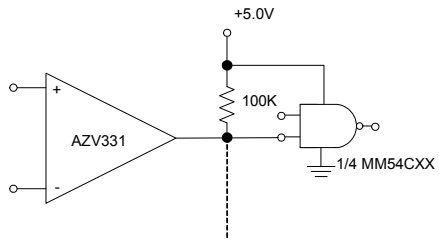

Figure 24. Driving CMOS/TTL

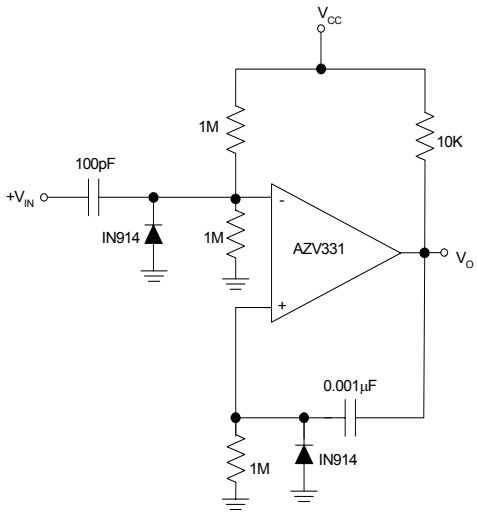

Figure 25. One Shot Multivibrator

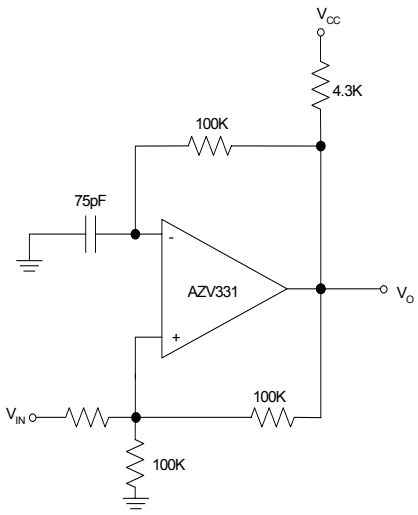

Figure 26. Squarewave Oscillator

Mechanical Dimensions

SC-70-5 **Unit: mm(inch)**

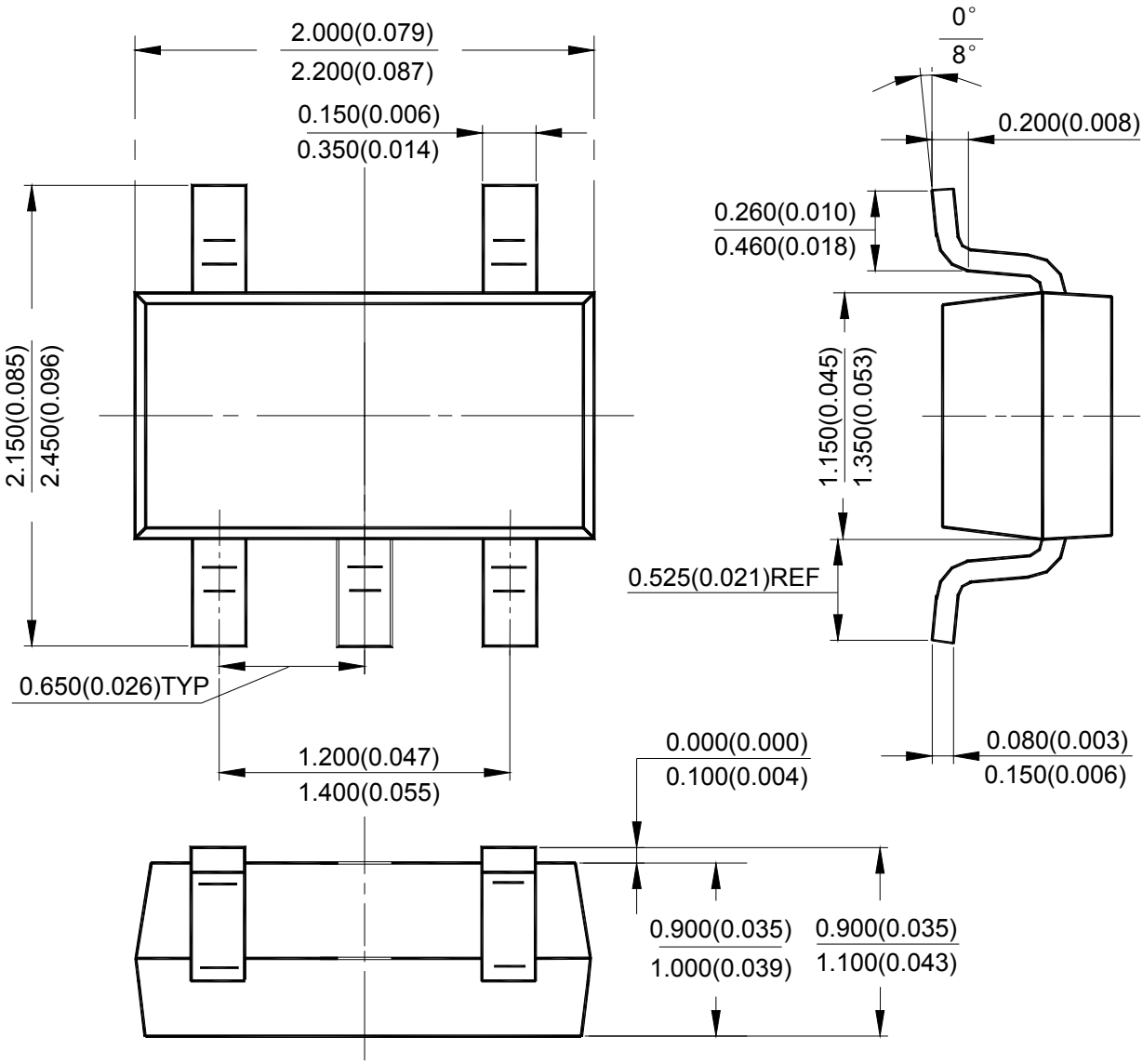

Mechanical Dimensions

SOT-23-5 **Unit: mm(inch)**

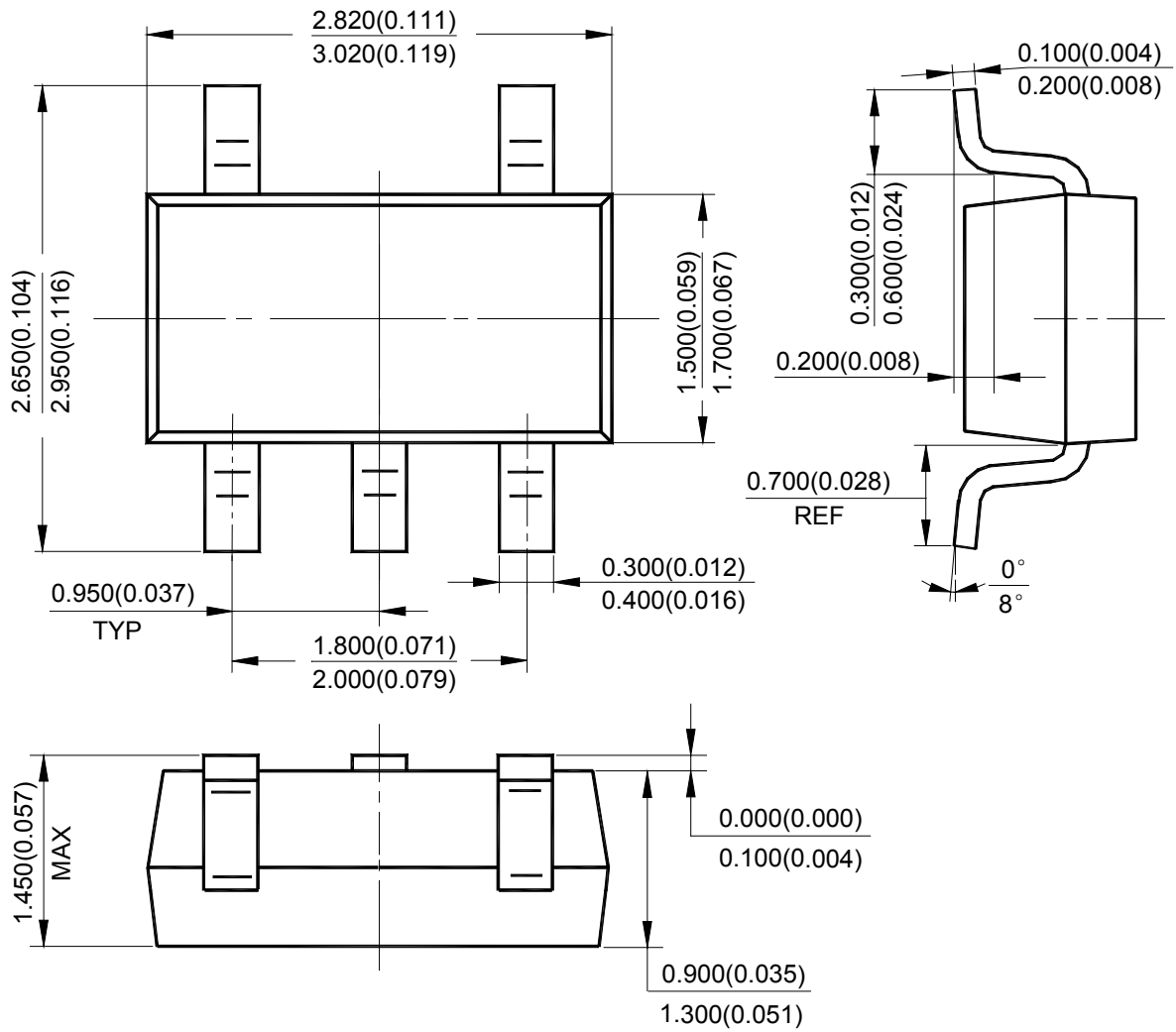

BCD Semiconductor Manufacturing Limited

http://www.bcdsemi.com

IMPORTANT NOTICE

BCD Semiconductor Manufacturing Limited reserves the right to make changes without further notice to any products or specifications herein. BCD Semiconductor Manufacturing Limited does not assume any responsibility for use of any its products for any particular purpose, nor does BCD Semiconductor Manufacturing Limited assume any liability arising out of the application or use of any its products or circuits. BCD Semiconductor Manufacturing Limited does not convey any license under its patent rights or other rights nor the rights of others.

MAIN SITE

- Headquarters
BCD Semiconductor Manufacturing Limited
No. 1600, Zi Xing Road, Shanghai ZiZhu Science-based Industrial Park, 200241, China
Tel: +86-21-24162266, Fax: +86-21-24162277

- Wafer Fab
Shanghai SIM-BCD Semiconductor Manufacturing Co., Ltd.
800 Yi Shan Road, Shanghai 200233, China
Tel: +86-21-6485 1491, Fax: +86-21-5450 0008

REGIONAL SALES OFFICE

Shenzhen Office
Shanghai SIM-BCD Semiconductor Manufacturing Co., Ltd., Shenzhen Office
Unit A Room 1203, Skyworth Bldg., Gaoxin Ave.1.S., Nanshan District, Shenzhen, China
Tel: +86-755-8826 7951
Fax: +86-755-8826 7865

Taiwan Office
BCD Semiconductor (Taiwan) Company Limited
4F, 298-1, Rui Guang Road, Nei-Hu District, Taipei, Taiwan
Tel: +886-2-2656 2808
Fax: +886-2-2656 2806

USA Office
BCD Semiconductor Corp.
30920 Huntwood Ave. Hayward, CA 94544, USA
Tel : +1-510-324-2988
Fax: +1-510-324-2788

OCEAN CHIPS
Океан Электроники
Поставка электронных компонентов

Компания «Океан Электроники» предлагает заключение долгосрочных отношений при поставках импортных электронных компонентов на взаимовыгодных условиях!

Наши преимущества:

- Поставка оригинальных импортных электронных компонентов напрямую с производств Америки, Европы и Азии, а так же с крупнейших складов мира;
- Широкая линейка поставок активных и пассивных импортных электронных компонентов (более 30 млн. наименований);
- Поставка сложных, дефицитных, либо снятых с производства позиций;
- Оперативные сроки поставки под заказ (от 5 рабочих дней);
- Экспресс доставка в любую точку России;
- Помощь Конструкторского Отдела и консультации квалифицированных инженеров;
- Техническая поддержка проекта, помощь в подборе аналогов, поставка прототипов;
- Поставка электронных компонентов под контролем ВП;
- Система менеджмента качества сертифицирована по Международному стандарту ISO 9001;
- При необходимости вся продукция военного и аэрокосмического назначения проходит испытания и сертификацию в лаборатории (по согласованию с заказчиком);
- Поставка специализированных компонентов военного и аэрокосмического уровня качества (Xilinx, Altera, Analog Devices, Intersil, Interpoint, Microsemi, Actel, Aeroflex, Peregrine, VPT, Syfer, Eurofarad, Texas Instruments, MS Kennedy, Miteq, Cobham, E2V, MA-COM, Hittite, Mini-Circuits, General Dynamics и др.);

Компания «Океан Электроники» является официальным дистрибьютором и эксклюзивным представителем в России одного из крупнейших производителей разъемов военного и аэрокосмического назначения **«JONHON»**, а так же официальным дистрибьютором и эксклюзивным представителем в России производителя высокотехнологичных и надежных решений для передачи СВЧ сигналов **«FORSTAR»**.

AVIC JONHON

«JONHON» (основан в 1970 г.)

Разъемы специального, военного и аэрокосмического назначения:

(Применяются в военной, авиационной, аэрокосмической, морской, железнодорожной, горно- и нефтедобывающей отраслях промышленности)

«FORSTAR» (основан в 1998 г.)

ВЧ соединители, коаксиальные кабели, кабельные сборки и микроволновые компоненты:

(Применяются в телекоммуникациях гражданского и специального назначения, в средствах связи, РЛС, а так же военной, авиационной и аэрокосмической отраслях промышленности).

FORSTAR®

Телефон: 8 (812) 309-75-97 (многоканальный)
Факс: 8 (812) 320-03-32
Электронная почта: ocean@oceanchips.ru
Web: http://oceanchips.ru/
Адрес: 198099, г. Санкт-Петербург, ул. Калинина, д. 2, корп. 4, лит. А