12-Lane 12-Port PCIe® Gen2 System Interconnect Switch

89HPES12NT12G2 Datasheet

Device Overview

The 89HPES12NT12G2 is a member of the IDT family of PCI Express® switching solutions. The PES12NT12G2 is a 12-lane, 12-port system interconnect switch optimized for PCI Express Gen2 packet switching in high-performance applications, supporting multiple simultaneous peer-to-peer traffic flows. Target applications include multi-host or intelligent I/O based systems where inter-domain communication is required, such as servers, storage, communications, and embedded systems.

Features

- High Performance Non-Blocking Switch Architecture
  - 12-lane, 12-port PCIe switch with flexible port configuration
  - Integrated SerDes supports 5.0 GT/s Gen2 and 2.5 GT/s Gen1 operation
  - Delivers up to 12 GBps (96 Gbps) of switching capacity
  - Supports 128 Bytes to 2 KB maximum payload size
  - Low latency cut-through architecture
  - Supports one virtual channel and eight traffic classes
- Port Configurability
  - Twelve x1 ports configurable as follows:
    - One x4 stack
      - Four x1 ports (ports 0 through 3 are not capable of merging with an adjacent port)
    - Two x4 stacks configurable as:
      - Two x4 ports
      - Four x2 ports
      - Eight x1 ports
  - Automatic per port link width negotiation ($x4 \rightarrow x2 \rightarrow x1$)
  - Crosslink support
  - Automatic lane reversal
  - Per lane SerDes configuration
    - De-emphasis
    - Receive equalization
    - Drive strength
- Innovative Switch Partitioning Feature
  - Supports up to 4 fully independent switch partitions
  - Logically independent switches in the same device
  - Configurable downstream port device numbering
  - Supports dynamic reconfiguration of switch partitions
    - Dynamic port reconfiguration — downstream, upstream, non-transparent bridge
    - Dynamic migration of ports between partitions
    - Movable upstream port within and between switch partitions
- Non-Transparent Bridging (NTB) Support
  - Supports up to 3 NT endpoints per switch, each endpoint can communicate with other switch partitions or external PCIe domains or CPUs
  - 6 BARs per NT Endpoint
    - Bar address translation
    - All BARs support 32/64-bit base and limit address translation
    - Two BARs (BAR2 and BAR4) support look-up table based address translation
  - 32 inbound and outbound doorbell registers
  - 4 inbound and outbound message registers
  - Supports up to 64 masters
  - Unlimited number of outstanding transactions
- Multicast
  - Compliant with the PCI-SIG multicast
  - Supports 64 multicast groups
  - Supports multicast across non-transparent port
  - Multicast overlay mechanism support
  - ECRC regeneration support
- Integrated Direct Memory Access (DMA) Controllers
  - Supports up to 2 DMA upstream ports, each with 2 DMA channels
  - Supports 32-bit and 64-bit memory-to-memory transfers
    - Fly-by translation provides reduced latency and increased performance over buffered approach
    - Supports arbitrary source and destination address alignment
    - Supports intra- as well as inter-partition data transfers using the non-transparent endpoint
  - Supports DMA transfers to multicast groups
  - Linked list descriptor-based operation
  - Flexible addressing modes
    - Linear addressing
    - Constant addressing
- Quality of Service (QoS)
  - Port arbitration
    - Round robin
  - Request metering
    - IDT proprietary feature that balances bandwidth among switch ports for maximum system throughput
  - High performance switch core architecture
    - Combined Input Output Queued (CIOQ) switch architecture with large buffers
- Clocking
  - Supports 100 MHz and 125 MHz reference clock frequencies
  - Flexible port clocking modes

IDT and the IDT logo are registered trademarks of Integrated Device Technology, Inc.

© 2013 Integrated Device Technology, Inc

- Common clock
- Non-common clock
- Local port clock with SSC (spread spectrum setting) and port reference clock input

◆ Hot-Plug and Hot Swap
- Hot-plug controller on all ports
  - Hot-plug supported on all downstream switch ports
- All ports support hot-plug using low-cost external I^2C I/O expanders
- Configurable presence-detect supports card and cable applications
- GPE output pin for hot-plug event notification
  - Enables SCI/SMI generation for legacy operating system support
- Hot-swap capable I/O

◆ Power Management
- Supports D0, D3hot and D3 power management states
- Active State Power Management (ASPM)
  - Supports L0, L0s, L1, L2/L3 Ready, and L3 link states
  - Configurable L0s and L1 entry timers allow performance/power-savings tuning
- SerDes power savings
  - Supports low swing / half-swing SerDes operation
  - SerDes associated with unused ports are turned off
  - SerDes associated with unused lanes are placed in a low power state

◆ Reliability, Availability, and Serviceability (RAS)
- ECRC support
- AER on all ports
- SECDED ECC protection on all internal RAMs
- End-to-end data path parity protection
- Checksum Serial EEPROM content protected
- Ability to generate an interrupt (INTx or MSI) on link up/down transitions

◆ Initialization / Configuration
- Supports Root (BIOS, OS, or driver), Serial EEPROM, or SMBus switch initialization
- Common switch configurations are supported with pin strapping (no external components)
- Supports in-system Serial EEPROM initialization/programming

◆ On-Die Temperature Sensor
- Range of 0 to 127.5 degrees Celsius
- Three programmable temperature thresholds with over and under temperature threshold alarms
- Automatic recording of maximum high or minimum low temperature

◆ 9 General Purpose I/O

◆ Test and Debug
- Ability to inject AER errors simplifies in system error handling software validation
- On-chip link activity and status outputs available for several ports
- Per port link activity and status outputs available using external I^2C I/O expander for all remaining ports
- Supports IEEE 1149.6 AC JTAG and IEEE 1149.1 JTAG

◆ Standards and Compatibility
- PCI Express Base Specification 2.1 compliant
- Implements the following optional PCI Express features
  - Advanced Error Reporting (AER) on all ports
  - End-to-End CRC (ECRC)
  - Access Control Services (ACS)
  - Device Serial Number Enhanced Capability
  - Sub-System ID and Sub-System Vendor ID Capability
  - Internal Error Reporting
  - Multicast
  - VGA and ISA enable
  - L0s and L1 ASPM
  - ARI

◆ Power Supplies
- Requires three power supply voltages (1.0V, 2.5V, and 3.3V)

◆ Packaged in a 19mm x 19mm 324-ball Flip Chip BGA with 1mm ball spacing

Product Description

With Non-Transparent Bridging functionality and innovative Switch Partitioning feature, the PES12NT12G2 allows true multi-host or multi-processor communications in a single device. Integrated DMA controllers enable high-performance system design by off-loading data transfer operations across memories from the processors. Each lane is capable of 5 GT/s link speed in both directions and is fully compliant with PCI Express Base Specification 2.1.

A non-transparent bridge (NTB) is required when two PCI Express domains need to communicate to each other. The main function of the NTB block is to initialize and translate addresses and device IDs to allow data exchange across PCI Express domains. The major functionalities of the NTB block are summarized in Table 1.

Block Diagram

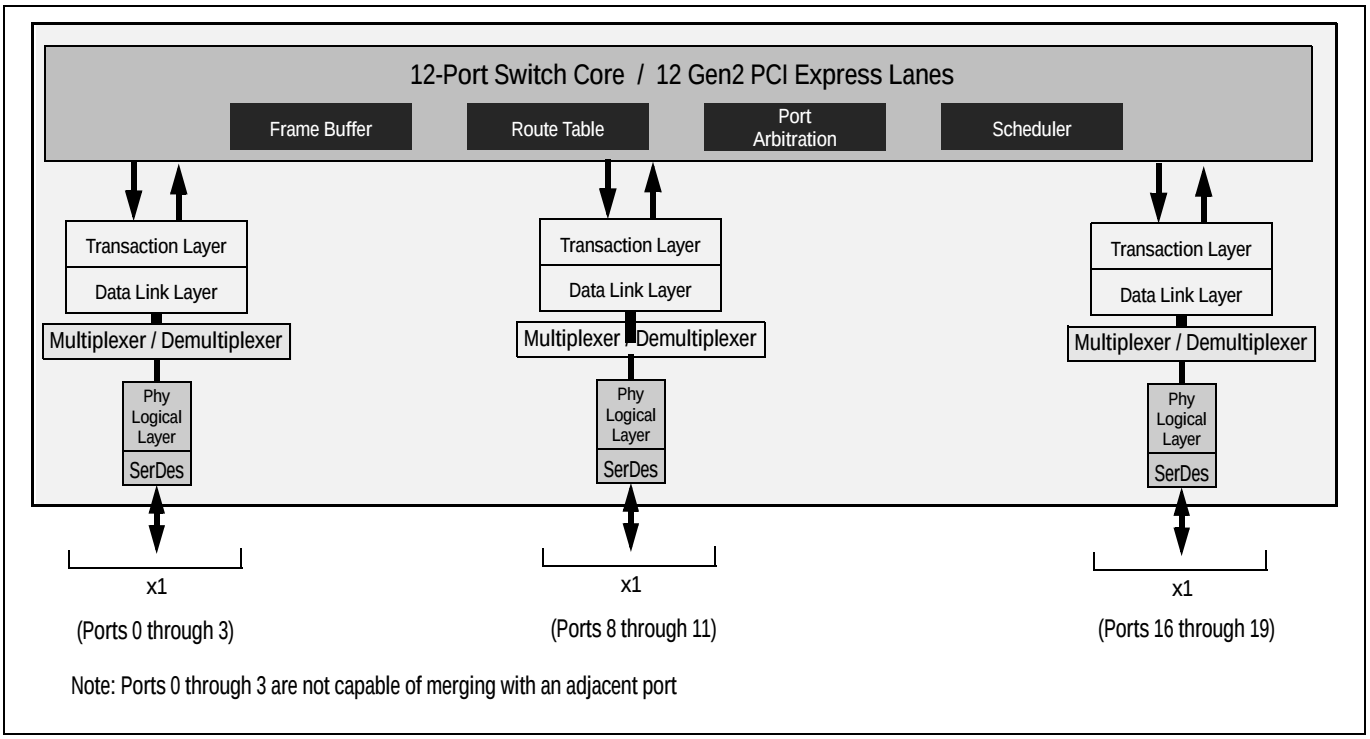

Figure 1 PES12NT12G2 Block Diagram

Function	Number	Description
NTB ports	Up to 3	Each device can be configured to have up to 3 NTB functions and can support up to 4 CPUs/roots.
Mapping table entries	Up to 64 for entire device	Each device can have up to 64 masters ID for address and ID translations.
Mapping windows	Six 32-bits or three 64-bits	Each NT port has six BARs, where each BAR opening an NT window to another domain.
Address translation	Direct-address and lookup table translations	Lookup-table translation divides the BAR aperture into up to 24 segments, where each segment has independent translation programming and is associated with an entry in a look-up table.
Doorbell registers	32 bits	Doorbell register is used for event signaling between domains, where an outbound doorbell bit sets a corresponding bit at the inbound doorbell in the other domain.
Message registers	4 inbound and outbound registers of 32-bits	Message registers allow mailbox message passing between domains -- message placed in the inbound register will be seen at the outbound register at the other domain.

Table 1 Non-Transparent Bridge Function Summary

SMBus Interface

The PES12NT12G2 contains two SMBus interfaces. The slave interface provides full access to the configuration registers in the PES12NT12G2, allowing every configuration register in the device to be read or written by an external agent. The master interface allows the default configuration register values of the PES12NT12G2 to be overridden following a reset with values programmed in an external serial EEPROM. The master interface is also used by an external Hot-Plug I/O expander.

Each of the two SMBus interfaces contain an SMBus clock pin and an SMBus data pin. In addition, the slave SMBus has SSMBADDR1 and SSMBADDR2 pins. As shown in Figure 2, the master and slave SMBuses may only be used in a split configuration. In the split configuration, the master and slave SMBuses operate as two independent buses; thus, multi-master arbitration is not required. The SMBus master interface does not support SMBus arbitration. As a result, the switch's SMBus master must be the only master in the SMBus lines that connect to the serial EEPROM and I/O expander slaves.

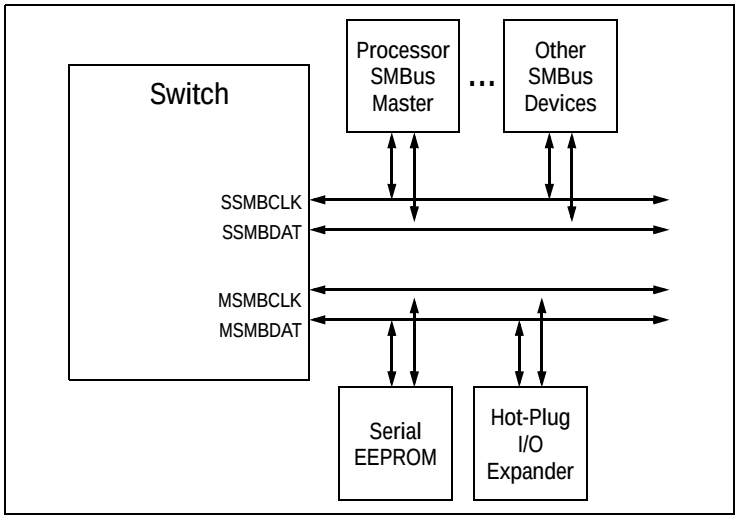

Figure 2 Split SMBus Interface Configuration

Hot-Plug Interface

The PES12NT12G2 supports PCI Express Hot-Plug on each downstream port. To reduce the number of pins required on the device, the PES12NT12G2 utilizes an external I/O expander, such as that used on PC motherboards, connected to the SMBus master interface. Following reset and configuration, whenever the state of a Hot-Plug output needs to be modified, the PES12NT12G2 generates an SMBus transaction to the I/O expander with the new value of all of the outputs. Whenever a Hot-Plug input changes, the I/O expander generates an interrupt which is received on the IOEXPINTN input pin (alternate function of GPIO) of the PES12NT12G2. In response to an I/O expander interrupt, the PES12NT12G2 generates an SMBus transaction to read the state of all of the Hot-Plug inputs from the I/O expander.

General Purpose Input/Output

The PES12NT12G2 provides 9 General Purpose I/O (GPIO) pins that may be individually configured as general purpose inputs, general purpose outputs, or alternate functions. All GPIO pins are shared with other on-chip functions. These alternate functions may be enabled via software, SMBus slave interface, or serial configuration EEPROM.

Pin Description

The following tables list the functions of the pins provided on the PES12NT12G2. Some of the functions listed may be multiplexed onto the same pin. The active polarity of a signal is defined using a suffix. Signals ending with an "N" are defined as being active, or asserted, when at a logic zero (low) level. All other signals (including clocks, buses, and select lines) will be interpreted as being active, or asserted, when at a logic one (high) level. Differential signals end with a suffix "N" or "P." The differential signal ending in "P" is the positive portion of the differential pair and the differential signal ending in "N" is the negative portion of the differential pair.

Note: Pin [x] of a port refers to a lane. For port 0, PE00RN[0] refers to lane 0, PE00RN[1] refers to lane 1, etc.

Signal	Type	Name/Description
PE00RN[0] PE00RP[0]	I	**PCI Express Port 0 Serial Data Receive.** Differential PCI Express receive pair for port 0.
PE00TN[0] PE00TP[0]	O	**PCI Express Port 0 Serial Data Transmit.** Differential PCI Express transmit pair for port 0.
PE01RN[0] PE01RP[0]	I	**PCI Express Port 1 Serial Data Receive.** Differential PCI Express receive pair for port 1.
PE01TN[0] PE01TP[0]	O	**PCI Express Port 1 Serial Data Transmit.** Differential PCI Express transmit pair for port 1.
PE02RN[0] PE02RP[0]	I	**PCI Express Port 2 Serial Data Receive.** Differential PCI Express receive pair for port 2.
PE02TN[0] PE02TP[0]	O	**PCI Express Port 2 Serial Data Transmit.** Differential PCI Express transmit pair for port 2.
PE03RN[0] PE03RP[0]	I	**PCI Express Port 3 Serial Data Receive.** Differential PCI Express receive pair for port 3.
PE03TN[0] PE03TP[0]	O	**PCI Express Port 3 Serial Data Transmit.** Differential PCI Express transmit pair for port 3.
PE08RN[0] PE08RP[0]	I	**PCI Express Port 8 Serial Data Receive.** Differential PCI Express receive pair for port 8.
PE08TN[0] PE08TP[0]	O	**PCI Express Port 8 Serial Data Transmit.** Differential PCI Express transmit pair for port 8.
PE09RN[0] PE09RP[0]	I	**PCI Express Port 9 Serial Data Receive.** Differential PCI Express receive pair for port 9.
PE09TN[[0] PE09TP[0]	O	**PCI Express Port 9 Serial Data Transmit.** Differential PCI Express transmit pair for port 9.
PE10RN[0] PE10RP[0]	I	**PCI Express Port 10 Serial Data Receive.** Differential PCI Express receive pair for port 10.
PE10TN[0] PE10TP[0]	O	**PCI Express Port 10 Serial Data Transmit.** Differential PCI Express transmit pair for port 10.
PE11RN[0] PE11RP[0]	I	**PCI Express Port 11 Serial Data Receive.** Differential PCI Express receive pair for port 11.
PE11TN[0] PE11TP[0]	O	**PCI Express Port 11 Serial Data Transmit.** Differential PCI Express transmit pair for port 11.
PE16RN[0] PE16RP[0]	I	**PCI Express Port 16 Serial Data Receive.** Differential PCI Express receive pair for port 16.
PE16TN[0] PE16TP[0]	O	**PCI Express Port 16 Serial Data Transmit.** Differential PCI Express transmit pair for port 16.
PE17RN[0] PE17RP[0]	I	**PCI Express Port 17 Serial Data Receive.** Differential PCI Express receive pair for port 17.
PE17TN[0] PE17TP[0]	O	**PCI Express Port 17 Serial Data Transmit.** Differential PCI Express transmit pair for port 17.
PE18RN[0] PE18RP[0]	I	**PCI Express Port 18 Serial Data Receive.** Differential PCI Express receive pair for port 18.

Table 2 PCI Express Interface Pins (Part 1 of 2)

Signal	Type	Name/Description
PE18TN[0] PE18TP[0]	O	**PCI Express Port 18 Serial Data Transmit.** Differential PCI Express transmit pair for port 18.
PE19RN[0] PE19RP[0]	I	**PCI Express Port 19 Serial Data Receive.** Differential PCI Express receive pair for port 19.
PE19TN[0] PE19TP[0]	O	**PCI Express Port 19 Serial Data Transmit.** Differential PCI Express transmit pair for port 19.

Table 2 PCI Express Interface Pins (Part 2 of 2)

Signal	Type	Name/Description
GCLKN[1:0] GCLKP[1:0]	I	**Global Reference Clock.** Differential reference clock input pairs. This clock is used as the reference clock by on-chip PLLs to generate the clocks required for the device logic. The frequency of the differential reference clock is determined by the GCLKFSEL signal. Note: Both pairs of the Global Reference Clocks must be connected to and derived from the same clock source. Refer to the Overview section of Chapter 2 in the PES12NT12G2 User Manual for additional details.
P08CLKN P08CLKP	I	**Port Reference Clock.** Differential reference clock pair associated with port 8.
P16CLKN P16CLKP	I	**Port Reference Clock.** Differential reference clock pair associated with port 16.

Table 3 Reference Clock Pins

Signal	Type	Name/Description
MSMBCLK	I/O	**Master SMBus Clock.** This bidirectional signal is used to synchronize transfers on the master SMBus. It is active and generating the clock only when the EEPROM or I/O Expanders are being accessed.
MSMBDAT	I/O	**Master SMBus Data.** This bidirectional signal is used for data on the master SMBus.
SSMBADDR[2,1]	I	**Slave SMBus Address.** These pins determine the SMBus address to which the slave SMBus interface responds.
SSMBCLK	I/O	**Slave SMBus Clock.** This bidirectional signal is used to synchronize transfers on the slave SMBus.
SSMBDAT	I/O	**Slave SMBus Data.** This bidirectional signal is used for data on the slave SMBus.

Table 4 SMBus Interface Pins

Signal	Type	Name/Description
GPIO[0]	I/O	General Purpose I/O. This pin can be configured as a general purpose I/O pin. 1st Alternate function pin name: PART0PERSTN 1st Alternate function pin type: Input/Output 1st Alternate function: Assertion of this signal initiated a partition fundamental reset in the corresponding partition. 2nd Alternate function pin name: P16LINKUPN 2nd Alternate function pin type: Output 2nd Alternate function: Port 16 Link Up Status output.
GPIO[1]	I/O	General Purpose I/O. This pin can be configured as a general purpose I/O pin. 1st Alternate function pin name: PART1PERSTN 1st Alternate function pin type: Input/Output 1st Alternate function: Assertion of this signal initiated a partition fundamental reset in the corresponding partition. 2nd Alternate function pin name: P16ACTIVEN 2nd Alternate function pin type: Output 2nd Alternate function: Port 16 Link Active Status Output.
GPIO[2]	I/O	General Purpose I/O. This pin can be configured as a general purpose I/O pin. 1st Alternate function pin name: PART2PERSTN 1st Alternate function pin type: Input/Output 1st Alternate function: Assertion of this signal initiated a partition fundamental reset in the corresponding partition.
GPIO[3]	I/O	General Purpose I/O. This pin can be configured as a general purpose I/O pin. 1st Alternate function pin name: PART3PERSTN 1st Alternate function pin type: Input/Output 1st Alternate function: Assertion of this signal initiated a partition fundamental reset in the corresponding partition.
GPIO[4]	I/O	General Purpose I/O. This pin can be configured as a general purpose I/O pin. 1st Alternate function pin name: FAILOVER0 1st Alternate function pin type: Input 1st Alternate function: When this signal changes state and the corresponding failover capability is enabled, a failover event is signaled. 2nd Alternate function pin name: P0LINKUPN 2nd Alternate function pin type: Output 2nd Alternate function: Port 0 Link Up Status output.
GPIO[5]	I/O	General Purpose I/O. This pin can be configured as a general purpose I/O pin. 1st Alternate function pin name: GPEN 1st Alternate function pin type: Output 1st Alternate function: Hot-plug general purpose even output. 2nd Alternate function pin name: P0ACTIVEN 2nd Alternate function pin type: Output 2nd Alternate function: Port 0 Link Active Status Output.

Table 5 General Purpose I/O Pins (Part 1 of 2)

Signal	Type	Name/Description
GPIO[6]	I/O	General Purpose I/O. This pin can be configured as a general purpose I/O pin. 1st Alternate function pin name: FAILOVER1 1st Alternate function pin type: Input 1st Alternate function: When this signal changes state and the corresponding failover capability is enabled, a failover event is signaled. 2nd Alternate function pin name: FAILOVER3 2nd Alternate function pin type: Input 2nd Alternate function: When this signal changes state and the corresponding failover capability is enabled, a failover event is signaled.
GPIO[7]	I/O	General Purpose I/O. This pin can be configured as a general purpose I/O pin. 1st Alternate function pin name: FAILOVER2 1st Alternate function pin type: Input 1st Alternate function: When this signal changes state and the corresponding failover capability is enabled, a failover event is signaled. 2nd Alternate function pin name: P8LINKUPN 2nd Alternate function pin type: Output 2nd Alternate function: Port 8 Link Up Status output.
GPIO[8]	I/O	General Purpose I/O. This pin can be configured as a general purpose I/O pin. 1st Alternate function pin name: IOEXPINTN 1st Alternate function pin type: Input 1st Alternate function: IO expander interrupt. 2nd Alternate function pin name: P8ACTIVEN 2nd Alternate function pin type: Output 2nd Alternate function: Port 8 Link Active Status Output.

Table 5 General Purpose I/O Pins (Part 2 of 2)

Signal	Type	Name/Description
STK2CFG[3:0]	I	**Stack 2 Configuration.** These pins select the configuration of stack 2.
STK3CFG[4:0]	I	**Stack 3 Configuration.** These pins select the configuration of stack 3.

Table 6 Stack Configuration Pins

Signal	Type	Name/Description
CLKMODE[1:0]	I	**Clock Mode.** These signals determine the port clocking mode used by ports of the device.
GCLKFSEL	I	**Global Clock Frequency Select.** These signals select the frequency of the GCLKP and GCLKN signals. 0x0 100 MHz 0x1 125 MHz

Table 7 System Pins (Part 1 of 2)

Signal	Type	Name/Description
PERSTN	I	**Fundamental Reset.** Assertion of this signal resets all logic inside the device.
RSTHALT	I	**Reset Halt.** When this signal is asserted during a switch fundamental reset sequence, the switch remains in a quasi-reset state with the Master and Slave SMBuses active. This allows software to read and write registers internal to the device before normal device operation begins. The device exits the quasi-reset state when the RSTHALT bit is cleared in the SWCTL register by an SMBus master.
SWMODE[3:0]	I	**Switch Mode.** These configuration pins determine the switch operating mode. These pins should be static and not change following the negation of PERSTN. 0x0 - Single partition 0x1 - Single partition with Serial EEPROM initialization 0x2 - Single partition with Serial EEPROM Jump 0 initialization 0x3 - Single partition with Serial EEPROM Jump 1 initialization 0x4 through 0x7 - Reserved 0x8 - Single partition with reduced latency 0x9 - Single partition with Serial EEPROM initialization and reduced latency 0xA - Multi-partition with Unattached ports 0xB - Multi-partition with Unattached ports and I^2C Reset 0xC - Multi-partition with Unattached ports and Serial EEPROM initialization 0xD - Multi-partition with Unattached ports with I^2C Reset and Serial EEPROM initialization 0xE - Multi-partition with Disabled ports 0xF - Multi-partition with Disabled ports and Serial EEPROM initialization

Table 7 System Pins (Part 2 of 2)

Signal	Type	Name/Description
JTAG_TCK	I	**JTAG Clock.** This is an input test clock used to clock the shifting of data into or out of the boundary scan logic or JTAG Controller. JTAG_TCK is independent of the system clock with a nominal 50% duty cycle.
JTAG_TDI	I	**JTAG Data Input.** This is the serial data input to the boundary scan logic or JTAG Controller.
JTAG_TDO	O	**JTAG Data Output.** This is the serial data shifted out from the boundary scan logic or JTAG Controller. When no data is being shifted out, this signal is tri-stated.
JTAG_TMS	I	**JTAG Mode.** The value on this signal controls the test mode select of the boundary scan logic or JTAG Controller.
JTAG_TRST_N	I	**JTAG Reset.** This active low signal asynchronously resets the boundary scan logic and JTAG TAP Controller. An external pull-up on the board is recommended to meet the JTAG specification in cases where the tester can access this signal. However, for systems running in functional mode, one of the following should occur: 1) actively drive this signal low with control logic 2) statically drive this signal low with an external pull-down on the board

Table 8 Test Pins

Signal	Type	Name/Description
REFRES[6,4,1,0]	—	**External Reference Resistor.** Reference for the corresponding SerDes bias currents and PLL calibration circuitry. A 3K Ohm +/- 1% resistor should be connected from this pin to ground and isolated from any source of noise injection. Each bit of this signal corresponds to a SerDes quad, e.g., REFRES[4] is the reference resistor for SerDes quad 4.
REFRESPLL	—	**PLL External Reference Resistor.** Provides a reference for the PLL bias currents and PLL calibration circuitry. A 3K Ohm +/- 1% resistor should be connected from this pin to ground and isolated from any source of noise injection.
V_{DD}CORE	—	**Core $V_{DD.}$** Power supply for core logic (1.0V).
V_{DD}I/O	—	**I/O $V_{DD.}$** LVTTL I/O buffer power supply (3.3V).
V_{DD}PEA	—	**PCI Express Analog Power.** Serdes analog power supply (1.0V).
V_{DD}PEHA	—	**PCI Express Analog High Power.** Serdes analog power supply (2.5V).
V_{DD}PETA	—	**PCI Express Transmitter Analog Voltage.** Serdes transmitter analog power supply (1.0V).
V_{SS}	—	**Ground.**

Table 9 Power, Ground, and SerDes Resistor Pins

Pin Characteristics

Note: Some input pads of the switch do not contain internal pull-ups or pull-downs. Unused SMBus and System inputs should be tied off to appropriate levels. This is especially critical for unused control signal inputs which, if left floating, could adversely affect operation. Also, floating pins can cause a slight increase in power consumption. Unused Serdes (Rx and Tx) pins should be left floating. Finally, No Connection pins should not be connected.

Function	Pin Name	Type	Buffer	I/O Type	Internal Resistor[1]	Notes
PCI Express Interface	PE00RN[0]	I	PCIe differential[2]	Serial Link		Note: Unused SerDes pins can be left floating
	PE00RP[0]	I				
	PE00TN[0]	O				
	PE00TP[0]	O				
	PE01RN[0]	I				
	PE01RP[0]	I				
	PE01TN[0]	O				
	PE01TP[0]	O				
	PE02RN[0]	I				
	PE02RP[0]	I				
	PE02TN[0]	O				
	PE02TP[0]	O				
	PE03RN[0]	I				

Table 10 Pin Characteristics (Part 1 of 3)

Function	Pin Name	Type	Buffer	I/O Type	Internal Resistor[1]	Notes
PCI Express Interface (cont.)	PE03RP[0]	I	PCIe differential	Serial Link		
	PE03TN[0]	O				
	PE03TP[0]	O				
	PE08RN[0]	I				
	PE08RP[0]	I				
	PE08TN[0]	O				
	PE08TP[0]	O				
	PE09RN[0]	I				
	PE09RP[0]	I				
	PE09TN[0]	O				
	PE09TP[0]	O				
	PE10RN[0]	I				
	PE10RP[0]	I				
	PE10TN[0]	O				
	PE10TP[0]	O				
	PE11RN[0]	I				
	PE11RP[0]	I				
	PE11TN[0]	O				
	PE11TP[0]	O				
	PE16RN[0]	I				
	PE16RP[0]	I				
	PE16TN[0]	O				
	PE16TP[0]	O				
	PE17RN[0]	I				
	PE17RP[0]	I				
	PE17TN[0]	O				
	PE17TP[0]	O				
	PE18RN[0]	I				
	PE18RP[0]	I				
	PE18TN[0]	O				
	PE18TP[0]	O				
	PE19RN[0]	I				
	PE19RP[0]	I				
	PE19TN[0]	O				
	PE19TP[0]	O				

Table 10 Pin Characteristics (Part 2 of 3)

Function	Pin Name	Type	Buffer	I/O Type	Internal Resistor[1]	Notes
Reference Clocks	GCLKN[1:0]	I	HCSL	Diff. Clock Input		Refer to Table 11 Note: Unused port clock pins should be connected to Vss on the board.
	GCLKP[1:0]	I				
	P08CLKN	I				
	P08CLKP	I				
	P16CLKN	I				
	P16CLKP	I				
SMBus	MSMBCLK	I/O	LVTTL	STI[3]	Note: When unused, these signals must be pulled up on the board using an external resistor or current source in accordance with the SMBus specification.	
	MSMBDAT	I/O		STI		
	SSMBADDR[2,1]	I			pull-up	
	SSMBCLK	I/O		STI	Note: When unused, these signals must be pulled up on the board using an external resistor or current source in accordance with the SMBus specification.	
	SSMBDAT	I/O		STI		
General Purpose I/O	GPIO[8:0]	I/O	LVTTL	STI, High Drive	pull-up	Unused pins can be left floating.
Stack Configuration	STK2CFG[3:0]	I	LVTTL	Input	pull-down	Unused pins can be left floating.
	STK3CFG[4:0]	I			pull-down	
System Pins	CLKMODE[1:0]	I	LVTTL	Input	pull-up	Unused pins can be left floating.
	GCLKFSEL	I			pull-down	
	PERSTN	I				Schmitt trigger
	RSTHALT	I			pull-down	Unused pins can be left floating.
	SWMODE[3:0]	I			pull-down	
EJTAG / JTAG	JTAG_TCK	I	LVTTL	STI	pull-up	Unused pins can be left floating.
	JTAG_TDI	I		STI	pull-up	
	JTAG_TDO	O				
	JTAG_TMS	I		STI	pull-up	
	JTAG_TRST_N	I		STI	pull-up	
SerDes Reference Resistors	REFRES[6,4,1,0]	—	Analog			Unused pins should be connected to Vss on the board.
	REFRESPLL	—				

Table 10 Pin Characteristics (Part 3 of 3)

1. Internal resistor values under typical operating conditions are 92K Ω for pull-up and 91K Ω for pull-down.

2. All receiver pins set the DC common mode voltage to ground. All transmitters must be AC coupled to the media.

3. Schmitt Trigger Input (STI).

Logic Diagram — PES12NT12G2

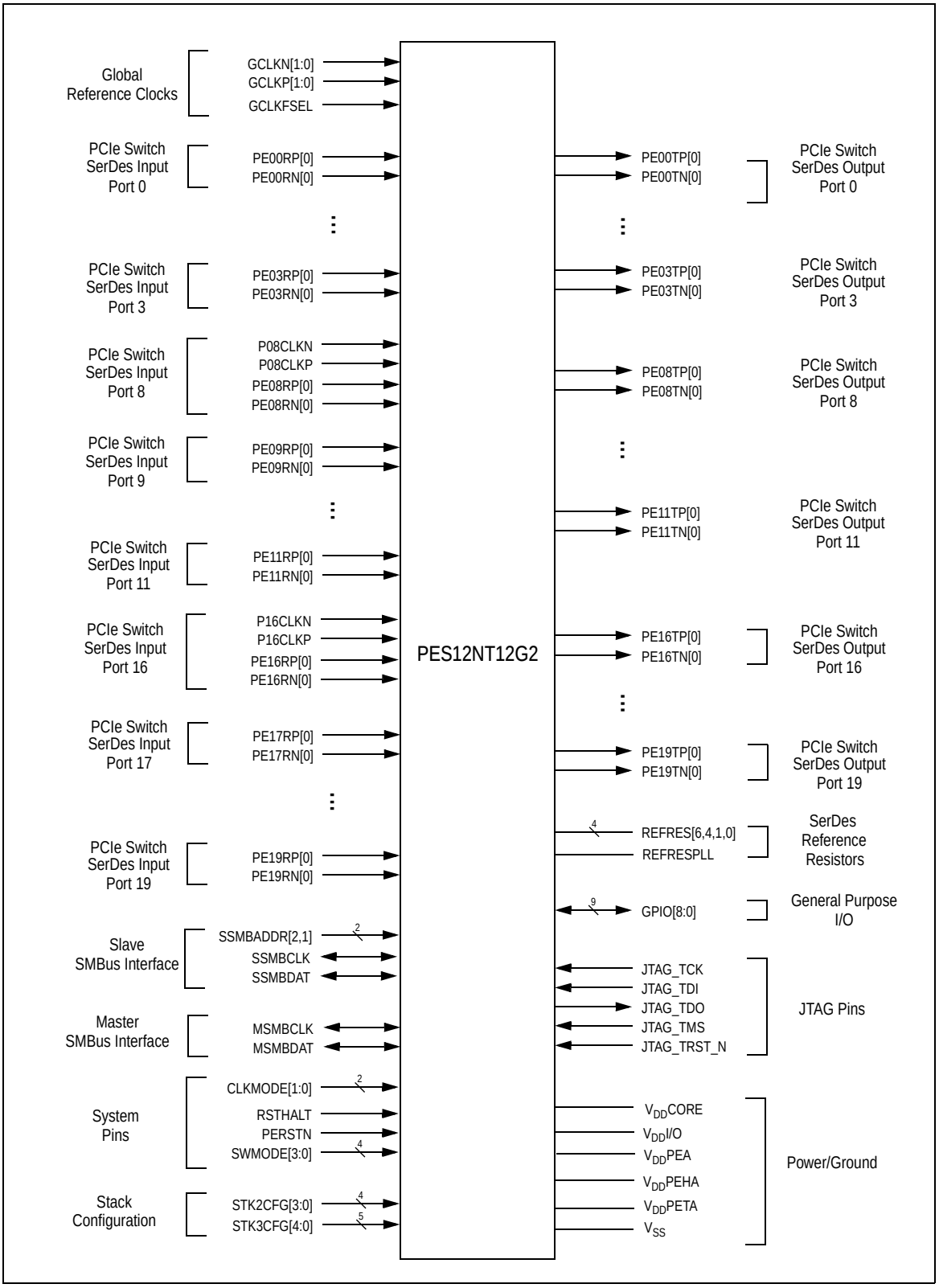

Figure 3 PES12NT12G2 Logic Diagram

System Clock Parameters

Values based on systems running at recommended supply voltages and operating temperatures, as shown in Tables 16 and 15.

Parameter	Description	Condition	Min	Typical	Max	Unit
$Refclk_{FREQ}$	Input reference clock frequency range		100		125[1]	MHz
T_{C-RISE}	Rising edge rate	Differential	0.6		4	V/ns
T_{C-FALL}	Falling edge rate	Differential	0.6		4	V/ns
V_{IH}	Differential input high voltage	Differential	+150			mV
V_{IL}	Differential input low voltage	Differential			-150	mV
V_{CROSS}	Absolute single-ended crossing point voltage	Single-ended	+250		+550	mV
$V_{CROSS-DELTA}$	Variation of V_{CROSS} over all rising clock edges	Single-ended			+140	mV
V_{RB}	Ring back voltage margin	Differential	-100		+100	mV
T_{STABLE}	Time before V_{RB} is allowed	Differential	500			ps
$T_{PERIOD-AVG}$	Average clock period accuracy		-300		2800	ppm
$T_{PERIOD-ABS}$	Absolute period, including spread-spectrum and jitter		9.847		10.203	ns
$T_{CC-JITTER}$	Cycle to cycle jitter				150	ps
V_{MAX}	Absolute maximum input voltage				+1.15	V
V_{MIN}	Absolute minimum input voltage		-0.3			V
Duty Cycle	Duty cycle		40		60	%
Rise/Fall Matching	Single ended rising Refclk edge rate versus falling Refclk edge rate			20		%
Z_{C-DC}	Clock source output DC impedance		40		60	Ω

Table 11 Input Clock Requirements

1. The input clock frequency will be either 100 or 125 MHz depending on signal GCLKFSEL.

Note: Refclk jitter compliant to PCIe Gen2 Common Clock architecture is adequate for the GCLKN/P[x] and PE[x]CLKN/P pins of this IDT PCIe switch. This same jitter specification is applicable when interfacing the switch to another IDT switch in a Separate (Non-Common) Clock architecture.

AC Timing Characteristics

Parameter	Description	Gen 1			Gen 2			Units
		Min[1]	Typ[1]	Max[1]	Min[1]	Typ[1]	Max[1]	
PCIe Transmit								
UI	Unit Interval	399.88	400	400.12	199.94	200	200.06	ps
T_{TX-EYE}	Minimum Tx Eye Width	0.75			0.75			UI
$T_{TX-EYE-MEDIAN-to-MAX-JITTER}$	Maximum time between the jitter median and maximum deviation from the median			0.125				UI

Table 12 PCIe AC Timing Characteristics (Part 1 of 2)

Parameter	Description	Gen 1			Gen 2			Units
		Min[1]	Typ[1]	Max[1]	Min[1]	Typ[1]	Max[1]	
$T_{TX-RISE}$, $T_{TX-FALL}$	TX Rise/Fall Time: 20% - 80%	0.125			0.15			UI
$T_{TX-IDLE-MIN}$	Minimum time in idle	20			20			UI
$T_{TX-IDLE-SET-TO-IDLE}$	Maximum time to transition to a valid Idle after sending an Idle ordered set			8			8	ns
$T_{TX-IDLE-TO-DIFF-DATA}$	Maximum time to transition from valid idle to diff data			8			8	ns
$T_{TX-SKEW}$	Transmitter data skew between any 2 lanes			1.3			1.3	ns
$T_{MIN-PULSED}$	Minimum Instantaneous Lone Pulse Width	NA			0.9			UI
$T_{TX-HF-DJ-DD}$	Transmitter Deterministic Jitter > 1.5MHz Bandwidth	NA					0.15	UI
$T_{RF-MISMATCH}$	Rise/Fall Time Differential Mismatch	NA					0.1	UI
PCIe Receive								
UI	Unit Interval	399.88	400	400.12	199.94		200.06	ps
T_{RX-EYE} (with jitter)	Minimum Receiver Eye Width (jitter tolerance)	0.4			0.4			UI
$T_{RX-EYE-MEDIUM\ TO\ MAX\ JITTER}$	Max time between jitter median & max deviation			0.3				UI
$T_{RX-SKEW}$	Lane to lane input skew			20			8	ns
$T_{RX-HF-RMS}$	1.5 — 100 MHz RMS jitter (common clock)	NA					3.4	ps
$T_{RX-HF-DJ-DD}$	Maximum tolerable DJ by the receiver (common clock)	NA					88	ps
$T_{RX-LF-RMS}$	10 KHz to 1.5 MHz RMS jitter (common clock)	NA					4.2	ps
$T_{RX-MIN-PULSE}$	Minimum receiver instantaneous eye width	NA			0.6			UI

Table 12 PCIe AC Timing Characteristics (Part 2 of 2)

1. Minimum, Typical, and Maximum values meet the requirements under PCI Express Base Specification 2.1.

Signal	Symbol	Reference Edge	Min	Max	Unit	Timing Diagram Reference
GPIO						
GPIO[8:0][1]	Tpw_13b[2]	None	50	—	ns	See Figure 4.

Table 13 GPIO AC Timing Characteristics

1. GPIO signals must meet the setup and hold times if they are synchronous or the minimum pulse width if they are asynchronous.

2. The values for this symbol were determined by calculation, not by testing.

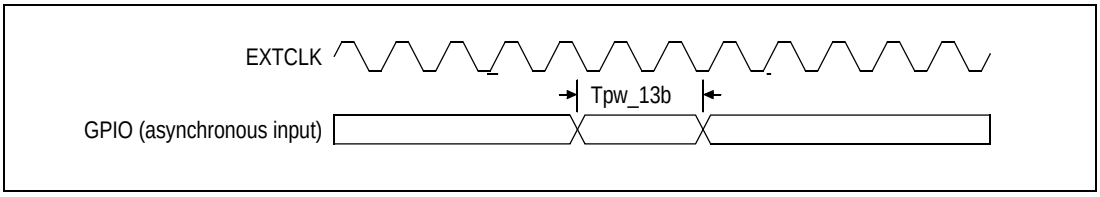

Figure 4 GPIO AC Timing Waveform

Signal	Symbol	Reference Edge	Min	Max	Unit	Timing Diagram Reference
JTAG						
JTAG_TCK	Tper_16a	none	50.0	—	ns	See Figure 5.
	Thigh_16a, Tlow_16a		10.0	25.0	ns	
JTAG_TMS[1], JTAG_TDI	Tsu_16b	JTAG_TCK rising	2.4	—	ns	
	Thld_16b		1.0	—	ns	
JTAG_TDO	Tdo_16c	JTAG_TCK falling	—	20	ns	
	Tdz_16c[2]		—	20	ns	
JTAG_TRST_N	Tpw_16d[2]	none	25.0	—	ns	

Table 14 JTAG AC Timing Characteristics

1. The JTAG specification, IEEE 1149.1, recommends that JTAG_TMS should be held at 1 while the signal applied at JTAG_TRST_N changes from 0 to 1. Otherwise, a race may occur if JTAG_TRST_N is deasserted (going from low to high) on a rising edge of JTAG_TCK when JTAG_TMS is low, because the TAP controller might go to either the Run-Test/Idle state or stay in the Test-Logic-Reset state.

2. The values for this symbol were determined by calculation, not by testing.

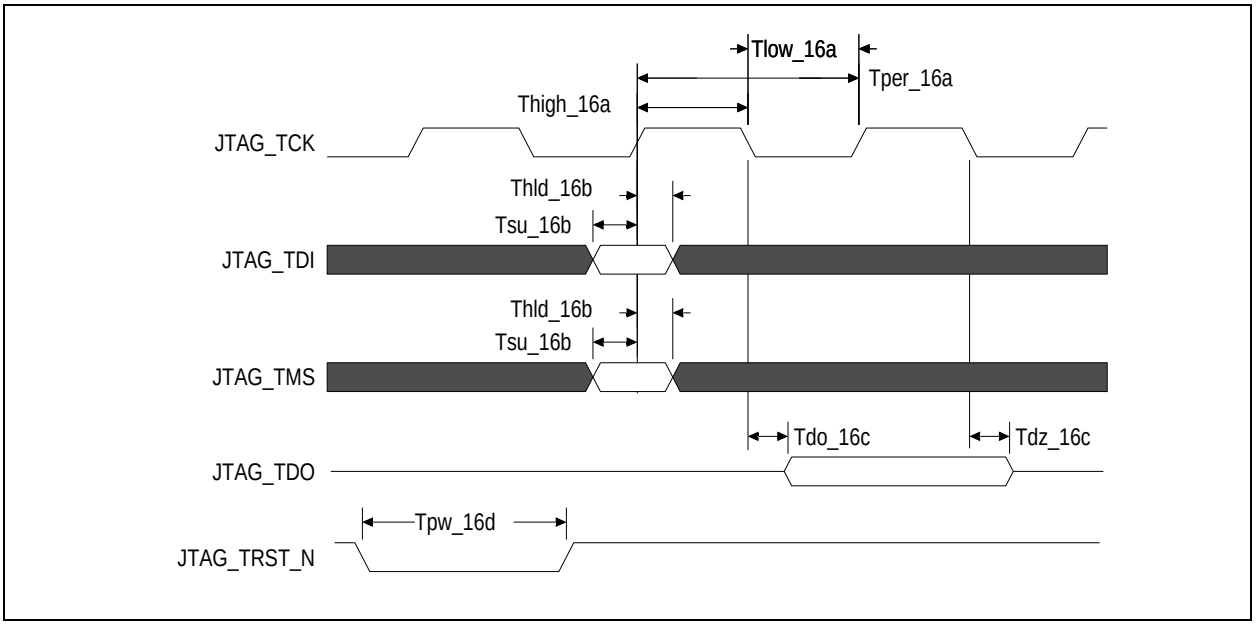

Figure 5 JTAG AC Timing Waveform

Recommended Operating Temperature

Grade	Temperature
Commercial	0°C to +70°C Ambient
Industrial	-40°C to +85°C Ambient

Table 15 PES12NT12G2 Operating Temperatures

Recommended Operating Supply Voltages — Commercial Temperature

Symbol	Parameter	Minimum	Typical	Maximum	Unit
V_{DD}CORE	Internal logic supply	0.9	1.0	1.1	V
V_{DD}I/O	I/O supply except for SerDes	3.125	3.3	3.465	V
V_{DD}PEA[1]	PCI Express Analog Power	0.95	1.0	1.1	V
V_{DD}PEHA[2]	PCI Express Analog High Power	2.25	2.5	2.75	V
V_{DD}PETA[1]	PCI Express Transmitter Analog Voltage	0.95	1.0	1.1	V
V_{SS}	Common ground	0	0	0	V

Table 16 PES12NT12G2 Operating Voltages — Commercial Temperature

1. V_{DD}PEA and V_{DD}PETA should have no more than 25m$V_{peak-peak}$ AC power supply noise superimposed on the 1.0V nominal DC value.

2. V_{DD}PEHA should have no more than 50m$V_{peak-peak}$ AC power supply noise superimposed on the 2.5V nominal DC value.

Recommended Operating Supply Voltages — Industrial Temperature

Symbol	Parameter	Minimum	Typical	Maximum	Unit
V_{DD}CORE	Internal logic supply	0.9	1.0	1.1	V
V_{DD}I/O	I/O supply except for SerDes	3.125	3.3	3.465	V
V_{DD}PEA[1]	PCI Express Analog Power	0.95	1.0	1.05	V
V_{DD}PEHA[2]	PCI Express Analog High Power	2.25	2.5	2.75	V
V_{DD}PETA[1]	PCI Express Transmitter Analog Voltage	0.95	1.0	1.1	V
V_{SS}	Common ground	0	0	0	V

Table 17 PES12NT12G2 Operating Voltages — Industrial Temperature

1. V_{DD}PEA and V_{DD}PETA should have no more than 25m$V_{peak-peak}$ AC power supply noise superimposed on the 1.0V nominal DC value.

2. V_{DD}PEHA should have no more than 50m$V_{peak-peak}$ AC power supply noise superimposed on the 2.5V nominal DC value.

Power-Up/Power-Down Sequence

During power supply ramp-up, V_{DD}CORE must remain at least 1.0V below V_{DD}I/O at all times. There are no other power-up sequence requirements for the various operating supply voltages.

The power-down sequence can occur in any order.

Power Consumption

Typical power is measured under the following conditions: 25°C Ambient, 35% total link usage on all ports, typical voltages defined in Table 16 (and also listed below).

Maximum power is measured under the following conditions: 70°C Ambient, 85% total link usage on all ports, maximum voltages defined in Table 16 (and also listed below).

Number of Active Lanes per Port		Core Supply		PCIe Analog Supply		PCIe Analog High Supply		PCIe Transmitter Supply		I/O Supply		Total	
		Typ 1.0V	Max 1.1V	Typ 1.0V	Max 1.1V	Typ 2.5V	Max 2.75V	Typ 1.0V	Max 1.1V	Typ 3.3V	Max 3.465	Typ Power	Max Power
x4/x4/x1/x1/x1/x1 (Full Swing)	mA	2241	3300	821	844	99	134	296	326	3	5		
	Watts	2.24	3.63	0.82	0.93	0.25	0.37	0.30	0.36	0.01	0.02	3.62	5.31
x4/x4/x1/x1/x1/x1 (Half Swing)	mA	2241	3300	706	726	99	134	154	170	3	5		
	Watts	2.24	3.63	0.71	0.80	0.25	0.37	0.16	0.19	0.01	.02	3.37	5.01

Table 18 PES12NT12G2 Power Consumption

Note 1: The above power consumption assumes that all ports are functioning at Gen2 (5.0 GT/S) speeds. Power consumption can be reduced by turning off unused ports through software or through boot EEPROM. Power savings will occur in V_{DD}PEA, V_{DD}PEHA, and V_{DD}PETA. Power savings can be estimated as directly proportional to the number of unused ports, since the power consumption of a turned-off port is close to zero. For example, if 3 ports out of 16 are turned off, then the power savings for each of the above three power rails can be calculated quite simply as 3/16 multiplied by the power consumption indicated in the above table.

Note 2: Using a port in Gen1 mode (2.5GT/S) results in approximately 18% power savings for each power rail: V_{DD}PEA, V_{DD}PEHA, and V_{DD}PETA.

Thermal Considerations

This section describes thermal considerations for the PES12NT12G2 (19mm^2 FCBGA324 package). The data in Table 19 below contains information that is relevant to the thermal performance of the PES12NT12G2 switch.

Symbol	Parameter	Value	Units	Conditions
$T_{J(max)}$	Junction Temperature	125	^{0}C	Maximum
$T_{A(max)}$	Ambient Temperature	70	^{0}C	Maximum for commercial-rated products
		85	^{0}C	Maximum for industrial-rated products
$\theta_{JA(effective)}$	Effective Thermal Resistance, Junction-to-Ambient	16.8	^{0}C/W	Zero air flow
		10.1	^{0}C/W	1 m/S air flow
		9.2	^{0}C/W	2 m/S air flow
θ_{JB}	Thermal Resistance, Junction-to-Board	4.1	^{0}C/W	
θ_{JC}	Thermal Resistance, Junction-to-Case	0.3	^{0}C/W	
P	Power Dissipation of the Device	5.31	Watts	Maximum

Table 19 Thermal Specifications for PES12NT12G2, 19x19 mm FCBGA324 Package

Note: It is important for the reliability of this device in any user environment that the junction temperature not exceed the $T_{J(max)}$ value specified in Table 19. Consequently, the effective junction to ambient thermal resistance (θ_{JA}) for the worst case scenario must be maintained below the value determined by the formula:

$$\theta_{JA} = (T_{J(max)} - T_{A(max)})/P$$

Given that the values of $T_{J(max)}$, $T_{A(max)}$, and P are known, the value of desired θ_{JA} becomes a known entity to the system designer. How to achieve the desired θ_{JA} is left up to the board or system designer, but in general, it can be achieved by adding the effects of θ_{JC} (value provided in Table 19), thermal resistance of the chosen adhesive (θ_{CS}), that of the heat sink (θ_{SA}), amount of airflow, and properties of the circuit board (number of layers and size of the board). It is strongly recommended that users perform their own thermal analysis for their own board and system design scenarios.

DC Electrical Characteristics

Values based on systems running at recommended supply voltages, as shown in Table 16.

Note: See Table 10, Pin Characteristics, for a complete I/O listing.

I/O Type	Parameter	Description	Gen1			Gen2			Unit	Conditions
			Min[1]	Typ[1]	Max[1]	Min[1]	Typ[1]	Max[1]		
Serial Link	PCIe Transmit									
	$V_{TX-DIFFp-p}$	Differential peak-to-peak output voltage	800		1200	800		1200	mV	
	$V_{TX-DIFFp-p-LOW}$	Low-Drive Differential Peak to Peak Output Voltage	400		1200	400		1200	mV	
	$V_{TX-DE-RATIO-3.5dB}$	De-emphasized differential output voltage	-3		-4	-3.0	-3.5	-4.0	dB	
	$V_{TX-DE-RATIO-6.0dB}$	De-emphasized differential output voltage	NA			-5.5	-6.0	-6.5	dB	
	$V_{TX-DC-CM}$	DC Common mode voltage	0		3.6	0		3.6	V	
	$V_{TX-CM-ACP}$	RMS AC peak common mode output voltage			20				mV	
	$V_{TX-CM-DC-active-idle-delta}$	Abs delta of DC common mode voltage between L0 and idle			100			100	mV	
	$V_{TX-CM-DC-line-delta}$	Abs delta of DC common mode voltage between D+ and D-			25			25	mV	
	$V_{TX-Idle-DiffP}$	Electrical idle diff peak output			20			20	mV	
	$RL_{TX-DIFF}$	Transmitter Differential Return loss	10					10	dB	0.05 - 1.25GHz
								8	dB	1.25 - 2.5GHz
	RL_{TX-CM}	Transmitter Common Mode Return loss	6					6	dB	
	$Z_{TX-DIFF-DC}$	DC Differential TX impedance	80	100	120			120	Ω	
	VTX-CM-ACpp	Peak-Peak AC Common	NA					100	mV	
	$V_{TX-DC-CM}$	Transmit Driver DC Common Mode Voltage	0		3.6	0		3.6	V	
	$V_{TX-RCV-DETECT}$	The amount of voltage change allowed during Receiver Detection			600			600	mV	
	$I_{TX-SHORT}$	Transmitter Short Circuit Current Limit	0		90				90	mA

Table 20 DC Electrical Characteristics (Part 1 of 3)

I/O Type	Parameter	Description	Gen1			Gen2			Unit	Conditions
			Min[1]	Typ[1]	Max[1]	Min[1]	Typ[1]	Max[1]		
Serial Link (cont.)	PCIe Receive									
	$V_{RX\text{-}DIFFp\text{-}p}$	Differential input voltage (peak-to-peak)	175		1200	120		1200	mV	
	$RL_{RX\text{-}DIFF}$	Receiver Differential Return Loss	10					10	dB	0.05 - 1.25GHz
								8		1.25 - 2.5GHz
	$RL_{RX\text{-}CM}$	Receiver Common Mode Return Loss	6					6	dB	
	$Z_{RX\text{-}DIFF\text{-}DC}$	Differential input impedance (DC)	80	100	120	Refer to return loss spec			Ω	
	$Z_{RX\text{--}DC}$	DC common mode impedance	40	50	60	40		60	Ω	
	$Z_{RX\text{-}COMM\text{-}DC}$	Powered down input common mode impedance (DC)	200k	350k				50k	Ω	
	$Z_{RX\text{-}HIGH\text{-}IMP\text{-}DC\text{-}POS}$	DC input CM input impedance for V>0 during reset or power down			50k			50k	Ω	
	$Z_{RX\text{-}HIGH\text{-}IMP\text{-}DC\text{-}NEG}$	DC input CM input impedance for V<0 during reset or power down			1.0k			1.0k	Ω	
	$V_{RX\text{-}IDLE\text{-}DET\text{-}DIFFp\text{-}p}$	Electrical idle detect threshold	65		175	65		175	mV	
	$V_{RX\text{-}CM\text{-}ACp}$	Receiver AC common-mode peak voltage			150			150	mV	$V_{RX\text{-}CM\text{-}ACp}$
PCIe REFCLK										
	C_{IN}	Input Capacitance	1.5	—		1.5	—		pF	
Other I/Os										
Low Drive Output	I_{OL}		—	2.5	—	—	2.5	—	mA	V_{OL} = 0.4v
	I_{OH}		—	-5.5	—	—	-5.5	—	mA	V_{OH} = 1.5V
High Drive Output	I_{OL}		—	12.0	—	—	12.0	—	mA	V_{OL} = 0.4v
	I_{OH}		—	-20.0	—	—	-20.0	—	mA	V_{OH} = 1.5V
Schmitt Trigger Input (STI)	V_{IL}		-0.3	—	0.8	-0.3	—	0.8	V	—
	V_{IH}		2.0	—	V_{DD}I/O + 0.5	2.0	—	V_{DD}I/O + 0.5	V	—
Input	V_{IL}		-0.3	—	0.8	-0.3	—	0.8	V	—
	V_{IH}		2.0	—	V_{DD}I/O + 0.5	2.0	—	V_{DD}I/O + 0.5	V	—
3.3V Output Low Voltage	V_{OL}		—	—	0.4		—	0.4	V	I_{OL} = 8mA for JTAG_TDO and GPIO pins
3.3V Output High Voltage	V_{OH}		2.4	—	—	2.4	—	—	V	I_{OH} = 8mA for JTAG_TDO and GPIO pins

Table 20 DC Electrical Characteristics (Part 2 of 3)

I/O Type	Parameter	Description	Gen1			Gen2			Unit	Condi-tions
			Min[1]	Typ[1]	Max[1]	Min[1]	Typ[1]	Max[1]		
Capacitance	C_{IN}		—	—	8.5	—	—	8.5	pF	—
Leakage	Inputs		—	—	± 10	—	—	± 10	µA	V_{DD}I/O (max)
	$I/O_{LEAK\ W/O}$ Pull-ups/downs		—	—	± 10	—	—	± 10	µA	V_{DD}I/O (max)
	$I/O_{LEAK\ WITH}$ Pull-ups/downs		—	—	± 80	—	—	± 80	µA	V_{DD}I/O (max)

Table 20 DC Electrical Characteristics (Part 3 of 3)

1. Minimum, Typical, and Maximum values meet the requirements under PCI Express Base Specification 2.1.

Absolute Maximum Voltage Rating

Core Supply	PCIe Analog Supply	PCIe Analog High Supply	PCIe Transmitter Supply	I/O Supply
1.5V	1.5V	4.6V	1.5V	4.6V

Table 21 PES12NT12G2 Absolute Maximum Voltage Rating

Warning: For proper and reliable operation in adherence with this data sheet, the device should not exceed the recommended operating voltages in Table 16. The absolute maximum operating voltages in Table 21 are offered to provide guidelines for voltage excursions outside the recommended voltage ranges. Device functionality is not guaranteed at these conditions and sustained operation at these values or any exposure to voltages outside the maximum range may adversely affect device functionality and reliability.

SMBus Characterization

Symbol	Parameter	SMBus 2.0 Char. Data[1]			Unit
		3V	3.3V	3.6V	
DC Parameter for SDA Pin					
V_{IL}	Input Low	1.16	1.26	1.35	V
V_{IH}	Input High	1.56	1.67	1.78	V
$V_{OL@350uA}$	Output Low	15	15	15	mV
$I_{OL@0.4V}$		23	24	25	mA
I_{Pullup}	Current Source	—	—	—	µA
I_{IL_Leak}	Input Low Leakage	0	0	0	µA
I_{IH_Leak}	Input High Leakage	0	0	0	µA

Table 22 SMBus DC Characterization Data (Part 1 of 2)

Symbol	Parameter	SMBus 2.0 Char. Data[1]			Unit
		3V	3.3V	3.6V	
DC Parameter for SCL Pin					
$V_{IL\ (V)}$	Input Low	1.11	1.2	1.31	V
$V_{IH\ (V)}$	Input High	1.54	1.65	1.76	V
I_{IL_Leak}	Input Low Leakage	0	0	0	µA
I_{IH_Leak}	Input High Leakage	0	0	0	µA

Table 22 SMBus DC Characterization Data (Part 2 of 2)

1. Data at room and hot temperature.

Symbol	Parameter	SMBus @3.3V ±10%[1]		Unit
		Min	Max	
F_{SCL}	Clock frequency	5	600	KHz
T_{BUF}	Bus free time between Stop and Start	3.5	—	µs
$T_{HD:STA}$	Start condition hold time	1	—	µs
$T_{SU:STA}$	Start condition setup time	1	—	µs
$T_{SU:STO}$	Stop condition setup time	1	—	µs
$T_{HD:DAT}$	Data hold time	1	—	ns
$T_{SU:DAT}$	Data setup time	1	—	ns
$T_{TIMEOUT}$	Detect clock low time out	—	74.7	ms
T_{LOW}[2]	Clock low period	3.7	—	µs
T_{HIGH}[2]	Clock high period	3.7	—	µs
T_F	Clock/Data fall time	—	72.2	ns
T_R	Clock/Data rise time	—	68.3	ns
$T_{POR@10kHz}$	Time which a device must be operational after power-on reset	20	—	ms

Table 23 SMBus AC Timing Data

1. Data at room and hot temperature.

2. T_{LOW} and T_{HIGH} are measured at F_{SCL} = 135 kHz.

Package Pinout — 324-BGA Signal Pinout for the PES12NT12G2

The following table lists the pin numbers and signal names for the PES12NT12G2 device. Note: Pins labeled NC are No Connection.

Pin	Function	Alt.	Pin	Function	Alt.	Pin	Function	Alt.
A1	V_{SS}		B9	NC		C17	SSMBDAT	
A2	PE08TP0		B10	NC		C18	SSMBCLK	
A3	PE08TN0		B11	V_{SS}		D1	P08CLKP	
A4	V_{SS}		B12	GCLKN0		D2	P08CLKN	
A5	STK3CFG3		B13	V_{SS}		D3	V_{SS}	
A6	V_{DD}I/O		B14	NC		D4	V_{SS}	
A7	V_{DD}I/O		B15	NC		D5	V_{SS}	
A8	V_{DD}I/O		B16	NC		D6	STK2CFG3	
A9	NC		B17	JTAG_TDO		D7	NC	
A10	NC		B18	MSMBCLK		D8	NC	
A11	V_{SS}		C1	V_{SS}		D9	V_{SS}	
A12	GCLKP0		C2	V_{SS}		D10	V_{SS}	
A13	V_{SS}		C3	PE09RN0		D11	V_{DD}PEHA	
A14	V_{SS}		C4	PE09RP0		D12	V_{DD}PEHA	
A15	NC		C5	STK2CFG1		D13	NC	
A16	NC		C6	STK3CFG1		D14	NC	
A17	V_{DD}I/O		C7	NC		D15	JTAG_TMS	
A18	V_{DD}I/O		C8	NC		D16	MSMBDAT	
B1	PE09TP0		C9	V_{SS}		D17	JTAG_TCK	
B2	PE09TN0		C10	REFRESPLL		D18	V_{SS}	
B3	V_{SS}		C11	V_{DD}PEHA		E1	V_{SS}	
B4	PE08RN0		C12	V_{SS}		E2	V_{SS}	
B5	PE08RP0		C13	NC		E3	PE10RN0	
B6	STK2CFG2		C14	NC		E4	PE10RP0	
B7	STK3CFG2		C15	CLKMODE1		E5	STK3CFG4	
B8	V_{DD}I/O		C16	JTAG_TRST_N		E6	V_{DD}PEA	

Table 24 PES12NT12G2 324-Pin Signal Pin-Out (Part 1 of 5)

Pin	Function	Alt.	Pin	Function	Alt.	Pin	Function	Alt.
E7	V_{DD}PEA		F15	SSMBADDR2		H5	V_{DD}PEHA	
E8	V_{DD}PEA		F16	V_{SS}		H6	V_{SS}	
E9	V_{DD}PETA		F17	PE02TN0		H7	V_{DD}CORE	
E10	V_{DD}PETA		F18	PE02TP0		H8	V_{SS}	
E11	V_{DD}PEA		G1	PE10TP0		H9	V_{DD}CORE	
E12	V_{DD}PEA		G2	PE10TN0		H10	V_{SS}	
E13	V_{DD}PEA		G3	V_{SS}		H11	V_{DD}CORE	
E14	PERSTN		G4	V_{SS}		H12	V_{DD}CORE	
E15	JTAG_TDI		G5	V_{DD}PEHA		H13	V_{SS}	
E16	V_{SS}		G6	V_{DD}PEA		H14	V_{DD}PETA	
E17	PE03TN0		G7	V_{DD}CORE		H15	PE02RP0	
E18	PE03TP0		G8	V_{SS}		H16	PE02RN0	
F1	V_{SS}		G9	V_{DD}CORE		H17	V_{SS}	
F2	V_{SS}		G10	V_{SS}		H18	V_{SS}	
F3	PE11RN0		G11	V_{DD}CORE		J1	V_{SS}	
F4	PE11RP0		G12	V_{SS}		J2	V_{SS}	
F5	V_{DD}PEHA		G13	V_{DD}PEA		J3	NC	
F6	V_{DD}PEA		G14	V_{SS}		J4	NC	
F7	V_{DD}CORE		G15	PE03RP0		J5	V_{DD}PETA	
F8	V_{SS}		G16	PE03RN0		J6	V_{SS}	
F9	V_{DD}CORE		G17	REFRES01		J7	V_{DD}CORE	
F10	V_{DD}PETA		G18	V_{SS}		J8	V_{SS}	
F11	V_{DD}CORE		H1	PE11TP0		J9	V_{DD}CORE	
F12	V_{SS}		H2	PE11TN0		J10	V_{SS}	
F13	V_{DD}PEA		H3	V_{SS}		J11	V_{DD}CORE	
F14	V_{SS}		H4	REFRES04		J12	V_{DD}CORE	

Table 24 PES12NT12G2 324-Pin Signal Pin-Out (Part 2 of 5)

Pin	Function	Alt.	Pin	Function	Alt.	Pin	Function	Alt.
J13	V_{SS}		L3	V_{SS}		M11	V_{DD}CORE	
J14	V_{DD}PETA		L4	V_{SS}		M12	V_{SS}	
J15	V_{SS}		L5	V_{DD}PETA		M13	V_{DD}PEA	
J16	V_{SS}		L6	V_{DD}PETA		M14	V_{DD}PEHA	
J17	PE01TN0		L7	V_{DD}CORE		M15	PE00RP0	
J18	PE01TP0		L8	V_{SS}		M16	PE00RN0	
K1	V_{SS}		L9	V_{DD}CORE		M17	NC	
K2	V_{SS}		L10	V_{SS}		M18	REFRES00	
K3	NC		L11	V_{DD}CORE		N1	SWMODE0	
K4	NC		L12	V_{SS}		N2	GCLKFSEL	
K5	V_{DD}PETA		L13	V_{DD}PEHA		N3	NC	
K6	V_{SS}		L14	V_{DD}PEHA		N4	NC	
K7	V_{DD}CORE		L15	PE01RP0		N5	V_{DD}PEA	
K8	V_{SS}		L16	PE01RN0		N6	V_{DD}PEA	
K9	V_{DD}CORE		L17	V_{SS}		N7	V_{DD}CORE	
K10	V_{SS}		L18	V_{SS}		N8	V_{SS}	
K11	V_{DD}CORE		M1	NC		N9	V_{DD}CORE	
K12	V_{DD}CORE		M2	NC		N10	V_{DD}PETA	
K13	V_{SS}		M3	V_{SS}		N11	V_{DD}CORE	
K14	V_{DD}PETA		M4	V_{SS}		N12	V_{SS}	
K15	V_{SS}		M5	V_{SS}		N13	V_{DD}PEA	
K16	V_{SS}		M6	V_{DD}PEA		N14	GPIO_07	2
K17	PE00TN0		M7	V_{DD}CORE		N15	GPIO_06	2
K18	PE00TP0		M8	V_{SS}		N16	GPIO_04	2
L1	NC		M9	V_{DD}CORE		N17	GPIO_08	2
L2	NC		M10	V_{SS}		N18	NC	

Table 24 PES12NT12G2 324-Pin Signal Pin-Out (Part 3 of 5)

Pin	Function	Alt.	Pin	Function	Alt.	Pin	Function	Alt.
P1	V_{SS}		R9	PE18RP0		T17	V_{SS}	
P2	V_{SS}		R10	PE19RP0		T18	NC	
P3	NC		R11	V_{DD}PEHA		U1	CLKMODE0	
P4	NC		R12	V_{SS}		U2	STK3CFG0	
P5	SWMODE2		R13	NC		U3	PE16TN0	
P6	V_{DD}PEA		R14	GPIO_01	2	U4	PE17TN0	
P7	V_{DD}PEA		R15	GPIO_03	1	U5	V_{SS}	
P8	V_{DD}PETA		R16	NC		U6	REFRES06	
P9	V_{DD}PETA		R17	NC		U7	PE18TN0	
P10	V_{DD}PETA		R18	SSMBADDR1		U8	PE19TN0	
P11	V_{DD}PEA		T1	NC		U9	V_{SS}	
P12	V_{DD}PEA		T2	NC		U10	V_{SS}	
P13	V_{DD}PEA		T3	RSTHALT		U11	P16CLKN	
P14	V_{DD}I/O		T4	SWMODE3		U12	GCLKN1	
P15	V_{DD}I/O		T5	PE16RN0		U13	V_{SS}	
P16	GPIO_05	2	T6	PE17RN0		U14	NC	
P17	NC		T7	V_{SS}		U15	NC	
P18	NC		T8	V_{SS}		U16	V_{SS}	
R1	NC		T9	PE18RN0		U17	NC	
R2	NC		T10	PE19RN0		U18	NC	
R3	SWMODE1		T11	V_{DD}PEHA		V1	V_{DD}I/O	
R4	STK2CFG0		T12	V_{DD}PEHA		V2	V_{DD}I/O	
R5	PE16RP0		T13	NC		V3	PE16TP0	
R6	PE17RP0		T14	GPIO_00	2	V4	PE17TP0	
R7	V_{SS}		T15	GPIO_02	1	V5	V_{SS}	
R8	V_{SS}		T16	NC		V6	V_{SS}	

Table 24 PES12NT12G2 324-Pin Signal Pin-Out (Part 4 of 5)

Pin	Function	Alt.	Pin	Function	Alt.	Pin	Function	Alt.
V7	PE18TP0		V11	P16CLKP		V15	NC	
V8	PE19TP0		V12	GCLKP1		V16	V_{SS}	
V9	V_{SS}		V13	V_{SS}		V17	NC	
V10	V_{SS}		V14	NC		V18	V_{SS}	

Table 24 PES12NT12G2 324-Pin Signal Pin-Out (Part 5 of 5)

PES12NT12G2 Package Drawing — 324-Pin HL/HLG324

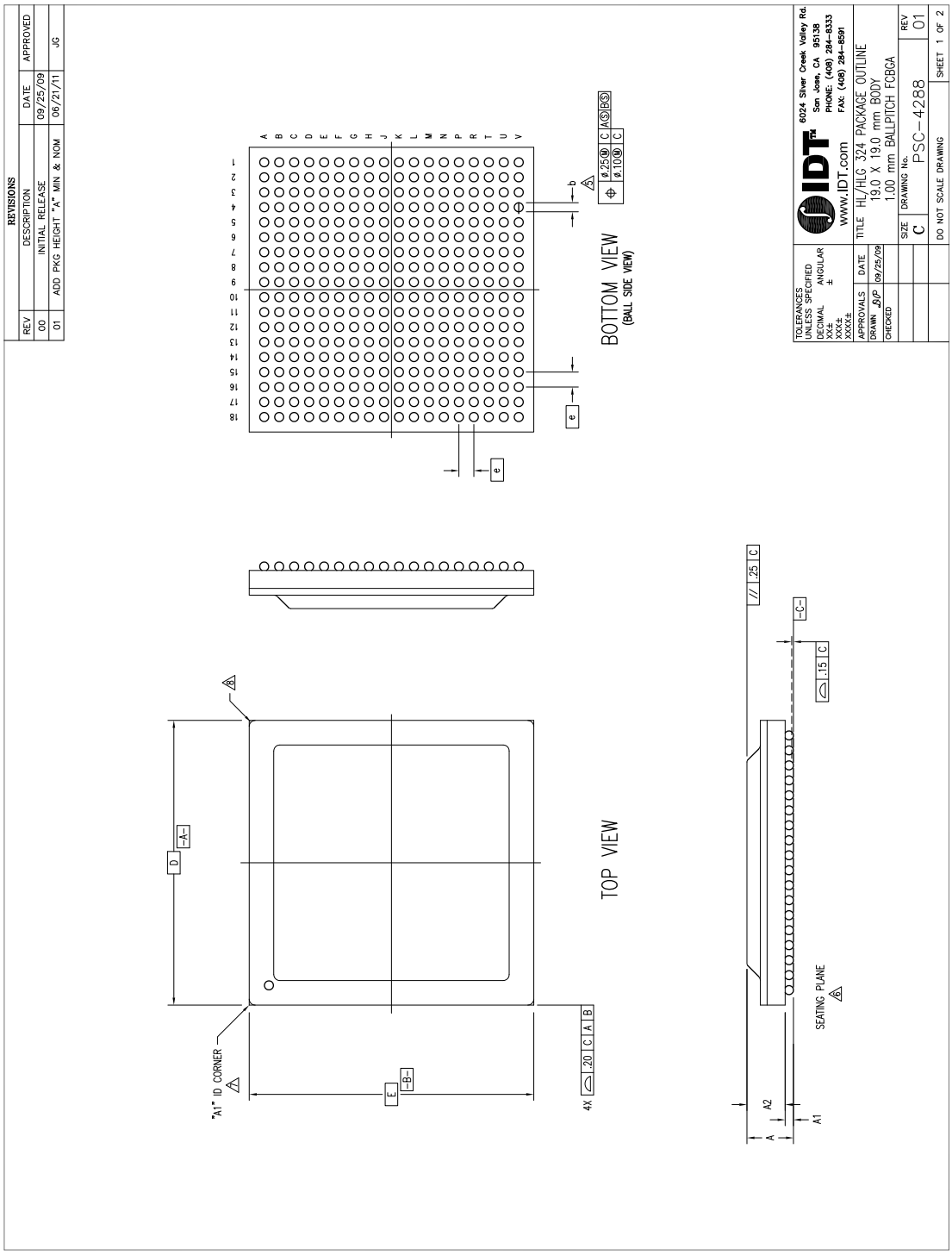

PES12NT12G2 Package Drawing — Page Two

REVISIONS			
REV	DESCRIPTION	DATE	APPROVED
00	INITIAL RELEASE	09/25/09	
01	ADD PKG HEIGHT "A" MIN & NOM	06/21/11	JG

NOTES:

1. ALL DIMENSIONING AND TOLERANCING CONFORM TO ANSI Y14.5M–1982
2. "e" REPRESENTS THE BASIC SOLDER BALL GRID PITCH
3. "M" REPRESENTS THE MAXIMUM SOLDER BALL MATRIX SIZE
4. "N" REPRESENTS THE BALLCOUNT NUMBER
5. DIMENSION "b" IS MEASURED AT THE MAXIMUM SOLDER BALL DIAMETER, PARALLEL TO PRIMARY DATUM -C-
6. SEATING PLANE AND PRIMARY DATUM -C- ARE DEFINED BY THE SPHERICAL CROWNS OF THE SOLDER BALLS
7. "A1" ID CORNER MUST BE IDENTIFIED BY CHAMFER, INK MARK, METALLIZED MARKING, INDENTATION OR OTHER FEATURE ON PACKAGE BODY
8. EXACT SHAPE OF EACH CORNER IS OPTIONAL
9. ALL DIMENSIONS ARE IN MILLIMETERS

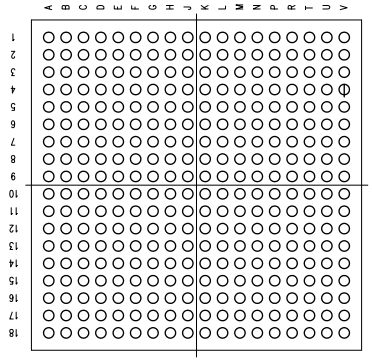

BOTTOM VIEW
(BALL SIDE VIEW)

SYMBOL	JEDEC VARIATION NONE			NOTE
	MIN	NOM	MAX	
A	2.38	2.63	2.88	
A1	0.30	–	–	
A2	1.76	–	2.42	
D	19.00 BSC			
E	19.00 BSC			
M	18			3
N	324			4
e	1.00 BSC			
b	0.50	0.60	0.70	5
CENTER BALL MATRIX	N/A			

TOLERANCES UNLESS SPECIFIED
DECIMAL ANGULAR
XX.X± ±
XXX±
XXXX±

APPROVALS DATE
DRAWN JGP 09/25/09
CHECKED

IDT™ 6024 Silver Creek Valley Rd.
San Jose, CA 95138
PHONE: (408) 284-8333
FAX: (408) 284-8591
www.IDT.com

TITLE HL/HLG324 PACKAGE OUTLINE
19.0 X 19.0 mm BODY
1.00 mm BALLPITCH FCBGA

SIZE C DRAWING No. PSC-4288 REV 01

DO NOT SCALE DRAWING SHEET 2 OF 2

Revision History

October 27, 2010: Initial publication of final data sheet.

November 11, 2010: Added ZB silicon on Ordering page.

January 26, 2011: In Table 18, Power Consumption, revised IO (and Total) power numbers in Full Swing section and added Half Swing section. Adjusted P value in Table 19.

March 9, 2011: In Table 10, deleted “External pull-down” from the Notes column for JTAG_TRST_N.

March 28, 2011: In Tables 16 and 17, added V_{DD}PETA to footnote #1.

May 20, 2011: Removed ZA silicon and added ZC to Order page and codes.

June 22, 2011: Added package height data to package drawings.

November 7, 2011: Revised values in Table 18, Power Consumption, and updated power dissipation value in Table 19.

November 29, 2011: Added new Tables 22 and 23, SMBus Characterization and Timing.

March 14, 2012: In Table 3, revised description for GCLKN/P signals.

April 16, 2013: In Table 20, added 3.3V output voltage parameters under Other I/Os category.

May 16, 2013: Added Note after Table 11. In Table 20, added information in the Conditions column for the 3.3V parameters.

December 16, 2013: Added footnote 2 to Table 23.

Ordering Information

NN	A	NNAANN	AN	AA	AAA	A
Product Family	Operating Voltage	Product Detail	Generation Series	Device Revision	Package	Temp Range

Legend
A = Alpha Character
N = Numeric Character

Blank	Commercial Temperature (0°C to +70°C Ambient)
I	Industrial Temperature (-40° C to +85° C Ambient)
HL	324-ball FCBGA
HLG	324-ball FCBGA, Green
ZB	ZB revision
ZC	ZC revision
G2	PCIe Gen 2
12NT12	12-lane, 12-port
H	1.0V Core Voltage
89	Serial Switching Product

Valid Combinations

89H12NT12G2ZBHL	324-ball FCBGA package, Commercial Temp.	89H12NT12G2ZCHL	324-ball FCBGA package, Commercial Temp.
89H12NT12G2ZBHLG	324-ball Green FCBGA package, Commercial Temp.	89H12NT12G2ZCHLG	324-ball Green FCBGA package, Commercial Temp.
89H12NT12G2ZBHLI	324-ball FCBGA package, Industrial Temp.	89H12NT12G2ZCHLI	324-ball FCBGA package, Industrial Temp.
89H12NT12G2ZBHLGI	324-ball Green FCBGA package, Industrial Temp.	89H12NT12G2ZCHLGI	324-ball Green FCBGA package, Industrial Temp.

CORPORATE HEADQUARTERS
6024 Silver Creek Valley Road
San Jose, CA 95138

for SALES:
800-345-7015 or 408-284-8200
www.idt.com

for Tech Support:
email: ssdhelp@eng.idt.com

DISCLAIMER Integrated Device Technology, Inc. (IDT) and its subsidiaries reserve the right to modify the products and/or specifications described herein at any time and at IDT's sole discretion. All information in this document, including descriptions of product features and performance, is subject to change without notice. Performance specifications and the operating parameters of the described products are determined in the independent state and are not guaranteed to perform the same way when installed in customer products. The information contained herein is provided without representation or warranty of any kind, whether express or implied, including, but not limited to, the suitability of IDT's products for any particular purpose, an implied warranty of merchantability, or non-infringement of the intellectual property rights of others. This document is presented only as a guide and does not convey any license under intellectual property rights of IDT or any third parties.

IDT's products are not intended for use in life support systems or similar devices where the failure or malfunction of an IDT product can be reasonably expected to significantly affect the health or safety of users. Anyone using an IDT product in such a manner does so at their own risk, absent an express, written agreement by IDT.

Integrated Device Technology, IDT and the IDT logo are registered trademarks of IDT. Other trademarks and service marks used herein, including protected names, logos and designs, are the property of IDT or their respective third party owners.

Copyright 2013. All rights reserved.

OCEAN CHIPS
Океан Электроники
Поставка электронных компонентов

Компания «Океан Электроники» предлагает заключение долгосрочных отношений при поставках импортных электронных компонентов на взаимовыгодных условиях!

Наши преимущества:

- Поставка оригинальных импортных электронных компонентов напрямую с производств Америки, Европы и Азии, а так же с крупнейших складов мира;
- Широкая линейка поставок активных и пассивных импортных электронных компонентов (более 30 млн. наименований);
- Поставка сложных, дефицитных, либо снятых с производства позиций;
- Оперативные сроки поставки под заказ (от 5 рабочих дней);
- Экспресс доставка в любую точку России;
- Помощь Конструкторского Отдела и консультации квалифицированных инженеров;
- Техническая поддержка проекта, помощь в подборе аналогов, поставка прототипов;
- Поставка электронных компонентов под контролем ВП;
- Система менеджмента качества сертифицирована по Международному стандарту ISO 9001;
- При необходимости вся продукция военного и аэрокосмического назначения проходит испытания и сертификацию в лаборатории (по согласованию с заказчиком);
- Поставка специализированных компонентов военного и аэрокосмического уровня качества (Xilinx, Altera, Analog Devices, Intersil, Interpoint, Microsemi, Actel, Aeroflex, Peregrine, VPT, Syfer, Eurofarad, Texas Instruments, MS Kennedy, Miteq, Cobham, E2V, MA-COM, Hittite, Mini-Circuits, General Dynamics и др.);

Компания «Океан Электроники» является официальным дистрибьютором и эксклюзивным представителем в России одного из крупнейших производителей разъемов военного и аэрокосмического назначения **«JONHON»**, а так же официальным дистрибьютором и эксклюзивным представителем в России производителя высокотехнологичных и надежных решений для передачи СВЧ сигналов **«FORSTAR»**.

AVIC JONHON

«JONHON» (основан в 1970 г.)

Разъемы специального, военного и аэрокосмического назначения:

(Применяются в военной, авиационной, аэрокосмической, морской, железнодорожной, горно- и нефтедобывающей отраслях промышленности)

«FORSTAR» (основан в 1998 г.)

ВЧ соединители, коаксиальные кабели, кабельные сборки и микроволновые компоненты:

(Применяются в телекоммуникациях гражданского и специального назначения, в средствах связи, РЛС, а так же военной, авиационной и аэрокосмической отраслях промышленности).

FORSTAR®

Телефон: 8 (812) 309-75-97 (многоканальный)
Факс: 8 (812) 320-03-32
Электронная почта: ocean@oceanchips.ru
Web: http://oceanchips.ru/
Адрес: 198099, г. Санкт-Петербург, ул. Калинина, д. 2, корп. 4, лит. А