Features

- Monolithic Field Programmable System Level Integrated Circuit (FPSLIC™)
  - AT40K SRAM-based FPGA with Embedded High-performance RISC AVR® Core, Extensive Data and Instruction SRAM and JTAG ICE
- 5,000 to 40,000 Gates of Patented SRAM-based AT40K FPGA with FreeRAM™
  - 2 - 18.4 Kbits of Distributed Single/Dual Port FPGA User SRAM
  - High-performance DSP Optimized FPGA Core Cell
  - Dynamically Reconfigurable In-System – FPGA Configuration Access Available On-chip from AVR Microcontroller Core to Support Cache Logic® Designs
  - Very Low Static and Dynamic Power Consumption – Ideal for Portable and Handheld Applications
- Patented AVR Enhanced RISC Architecture
  - 120+ Powerful Instructions – Most Single Clock Cycle Execution
  - High-performance Hardware Multiplier for DSP-based Systems
  - Approaching 1 MIPS per MHz Performance
  - C Code Optimized Architecture with 32 x 8 General-purpose Internal Registers
  - Low-power Idle, Power-save and Power-down Modes
  - 100 µA Standby and Typical 2-3 mA per MHz Active
- Up to 36 Kbytes of Dynamically Allocated Instruction and Data SRAM
  - Up to 16 Kbytes x 16 Internal 15 ns Instructions SRAM
  - Up to 16 Kbytes x 8 Internal 15 ns Data SRAM
- JTAG (IEEE std. 1149.1 Compliant) Interface
  - Extensive On-chip Debug Support
  - Limited Boundary-scan Capabilities According to the JTAG Standard (AVR Ports)
- AVR Fixed Peripherals
  - Industry-standard 2-wire Serial Interface
  - Two Programmable Serial UARTs
  - Two 8-bit Timer/Counters with Separate Prescaler and PWM
  - One 16-bit Timer/Counter with Separate Prescaler, Compare, Capture Modes and Dual 8-, 9- or 10-bit PWM
- Support for FPGA Custom Peripherals
  - AVR Peripheral Control – 16 Decoded AVR Address Lines Directly Accessible to FPGA
  - FPGA Macro Library of Custom Peripherals
- 16 FPGA Supplied Internal Interrupts to AVR
- Up to Four External Interrupts to AVR
- 8 Global FPGA Clocks
  - Two FPGA Clocks Driven from AVR Logic
  - FPGA Global Clock Access Available from FPGA Core
- Multiple Oscillator Circuits
  - Programmable Watchdog Timer with On-chip Oscillator
  - Oscillator to AVR Internal Clock Circuit
  - Software-selectable Clock Frequency
  - Oscillator to Timer/Counter for Real-time Clock
- V_{CC}: 3.0V - 3.6V
- 3.3V 33 MHz PCI-compliant FPGA I/O
  - 20 mA Sink/Source High-performance I/O Structures
  - All FPGA I/O Individually Programmable
- High-performance, Low-power 0.35µ CMOS Five-layer Metal Process
- State-of-the-art Integrated PC-based Software Suite including Co-verification
- 5V I/O Tolerant

FPSLIC™

5K - 40K Gates of AT40K FPGA with 8-bit AVR® Microcontroller, up to 36K Bytes of SRAM and On-chip JTAG ICE

AT94KAL Series Field Programmable System Level Integrated Circuit

Rev. 1138G–FPSLI–11/03

Description

The AT94KAL Series FPSLIC family shown in Table 1 is a combination of the popular Atmel AT40K Series SRAM FPGAs and the high-performance Atmel AVR 8-bit RISC microcontroller with standard peripherals. Extensive data and instruction SRAM as well as device control and management logic are included on this monolithic device, fabricated on Atmel's 0.35µ five-layer metal CMOS process.

The AT40K FPGA core is a fully 3.3V PCI-compliant, SRAM-based FPGA with distributed 10 ns programmable synchronous/asynchronous, dual-port/single-port SRAM, 8 global clocks, Cache Logic ability (partially or fully reconfigurable without loss of data) and 5,000 to 40,000 usable gates.

Table 1. The AT94K Series Characteristics

Device		AT94K05AL	AT94K10AL	AT94K40AL
FPGA Gates		5K	10K	40K
FPGA Core Cells		256	576	2304
FPGA SRAM Bits		2048	4096	18432
FPGA Registers (Total)		436	846	2862
Maximum FPGA User I/O		96	144	288
AVR Programmable I/O Lines		8	16	16
Program SRAM		4 Kbytes - 16 Kbytes	20 Kbytes - 32 Kbytes	20 Kbytes - 32 Kbytes
Data SRAM		4 Kbytes - 16 Kbytes	4 Kbytes- 16 Kbytes	4 Kbytes - 16 Kbytes
Hardware Multiplier (8-bit)		Yes	Yes	Yes
2-wire Serial Interface		Yes	Yes	Yes
UARTs		2	2	2
Watchdog Timer		Yes	Yes	Yes
Timer/Counters		3	3	3
Real-time Clock		Yes	Yes	Yes
JTAG ICE		Yes(1)	Yes(1)	Yes(1)
Typical AVR throughput	@ 25 MHz	19 MIPS	19 MIPS	19 MIPS
Operating Voltage(2)	AL	3.0 - 3.6V(2)	3.0 - 3.6V(2)	3.0 - 3.6V(2)

Notes: 1. FPSLIC parts with JTAG ICE support can be identified by the letter "J" after the device date code, e.g., 4201 (no ICE support) and 4201J (with ICE support), see Figure 1.
2. FPSLIC devices should be laid out during PCB design to support a split power supply. Please refer to the "Designing in Split Power Supply Support for AT94KAL and AT94SAL Devices" application note, available on the Atmel web site at http://www.atmel.com/atmel/acrobat/doc2308.pdf.

Figure 1. FPSLIC Device Date Code with JTAG ICE Support

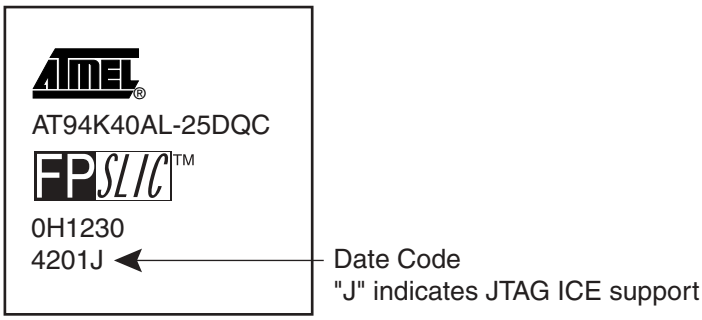

The AT94K series architecture is shown in Figure 2.

Figure 2. AT94K Series Architecture

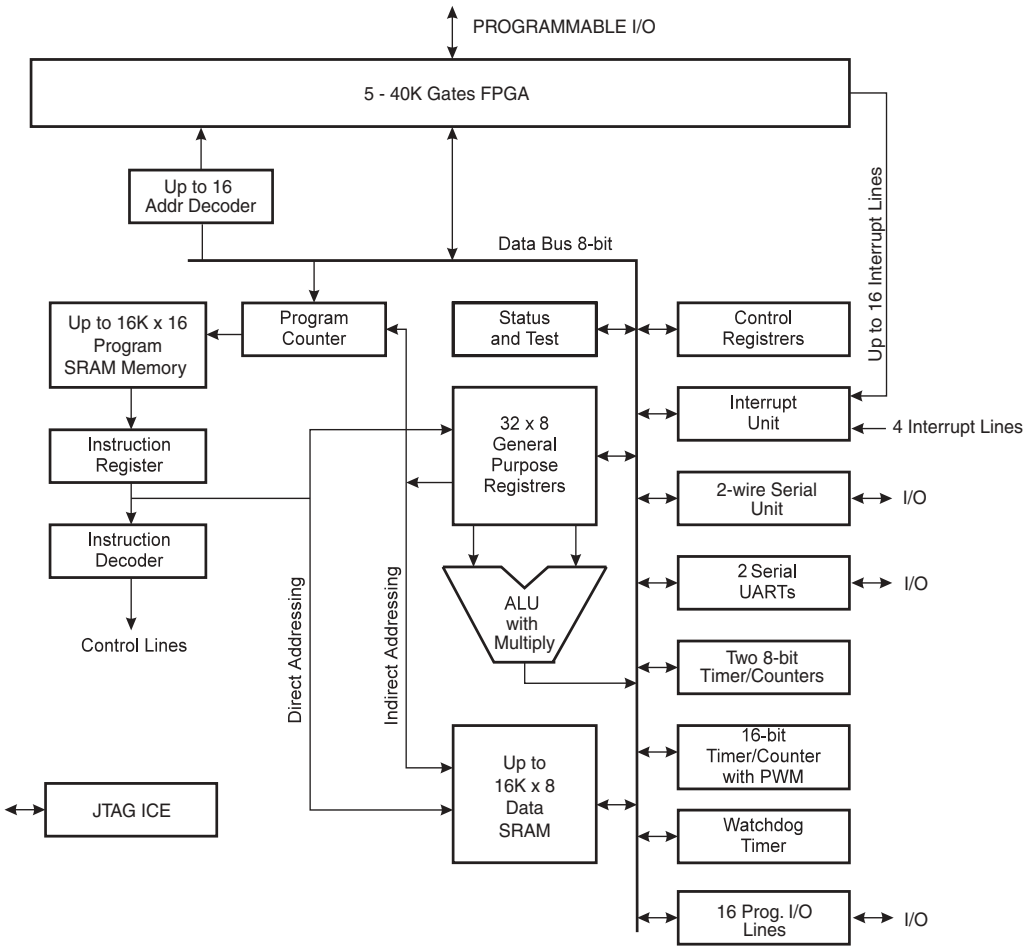

The embedded AVR core achieves throughputs approaching 1 MIPS per MHz by executing powerful instructions in a single-clock cycle, and allows system designers to optimize power consumption versus processing speed. The AVR core is based on an enhanced RISC architecture that combines a rich instruction set with 32 general-purpose working registers. All 32 registers are directly connected to the Arithmetic Logic Unit (ALU), allowing two independent registers to be accessed in one single instruction executed in one clock cycle. The resulting architecture is more code-efficient while achieving throughputs up to ten times faster than conventional CISC microcontrollers at the same clock frequency. The AVR executes out of on-chip SRAM. Both the FPGA configuration SRAM and the AVR instruction code SRAM can be automatically loaded at system power-up using Atmel's In-System Programmable (ISP) AT17 Series EEPROM Configuration Memories or ATFS FPSLIC Support Devices.

State-of-the-art FPSLIC design tools, System Designer™, were developed in conjunction with the FPSLIC architecture to help reduce overall time-to-market by integrating microcontroller development and debug, FPGA development and Place and Route, and complete system co-verification in one easy-to-use software tool.

Table 2. ATFS FPSLIC Support Devices

FPSLIC Device	FPSLIC Support Device	Configuration Data	Spare Memory
AT94K05	ATFS05	226520 Bits	35624 Bits
AT94K10	ATFS10	430488 Bits	93800 Bits
AT94K40	ATFS40	815382 Bits	233194 Bits

FPGA Core

The AT40K core can be used for high-performance designs, by implementing a variety of compute-intensive arithmetic functions. These include adaptive finite impulse response (FIR) filters, fast Fourier transforms (FFT), convolvers, interpolators, and discrete-cosine transforms (DCT) that are required for video compression and decompression, encryption, convolution and other multimedia applications.

Fast, Flexible and Efficient SRAM

The AT40K core offers a patented distributed 10 ns SRAM capability where the RAM can be used without losing logic resources. Multiple independent, synchronous or asynchronous, dual-port or single-port RAM functions (FIFO, scratch pad, etc.) can be created using Atmel's macro generator tool.

Fast, Efficient Array and Vector Multipliers

The AT40K cores patented 8-sided core cell with direct horizontal, vertical and diagonal cell-to-cell connections implements ultra-fast array multipliers without using any busing resources. The AT40K core's Cache Logic capability enables a large number of design coefficients and variables to be implemented in a very small amount of silicon, enabling vast improvement in system speed.

Cache Logic Design

The AT40K FPGA core is capable of implementing Cache Logic (dynamic full/partial logic reconfiguration, without loss of data, on-the-fly) for building adaptive logic and systems. As new logic functions are required, they can be loaded into the logic cache without losing the data already there or disrupting the operation of the rest of the chip; replacing or complementing the active logic. The AT40K FPGA core can act as a reconfigurable resource within the FPSLIC environment.

Automatic Component Generators

The AT40K is capable of implementing user-defined, automatically generated, macros; speed and functionality are unaffected by the macro orientation or density of the target device. This enables the fastest, most predictable and efficient FPGA design approach and minimizes design risk by reusing already proven functions. The Automatic Component Generators work seamlessly with industry-standard schematic and synthesis tools to create fast, efficient designs.

The patented AT40K architecture employs a symmetrical grid of small yet powerful cells connected to a flexible busing network. Independently controlled clocks and resets govern every column of four cells. The FPSLIC device is surrounded on three sides by programmable I/Os.

Core usable gate counts range from 5,000 to 40,000 gates and 436 to 2,864 registers. Pin locations are consistent throughout the FPSLIC family for easy design migration in the same package footprint.

The Atmel AT40K FPGA core architecture was developed to provide the highest levels of performance, functional density and design flexibility. The cells in the FPGA core array are small, efficient and can implement any pair of Boolean functions of (the same) three inputs or any single Boolean function of four inputs. The cell's small size leads to arrays with large numbers of cells. A simple, high-speed busing network provides fast, efficient communication over medium and long distances.

The Symmetrical Array

At the heart of the Atmel FPSLIC architecture is a symmetrical array of identical cells. The array is continuous from one edge to the other, except for bus repeaters spaced every four cells, see Figure 3. At the intersection of each repeater row and column is a 32 x 4 RAM block accessible by adjacent buses. The RAM can be configured as either a single-ported or dual-ported RAM, with either synchronous or asynchronous operation.

The Busing Network

Figure 3. Busing Network

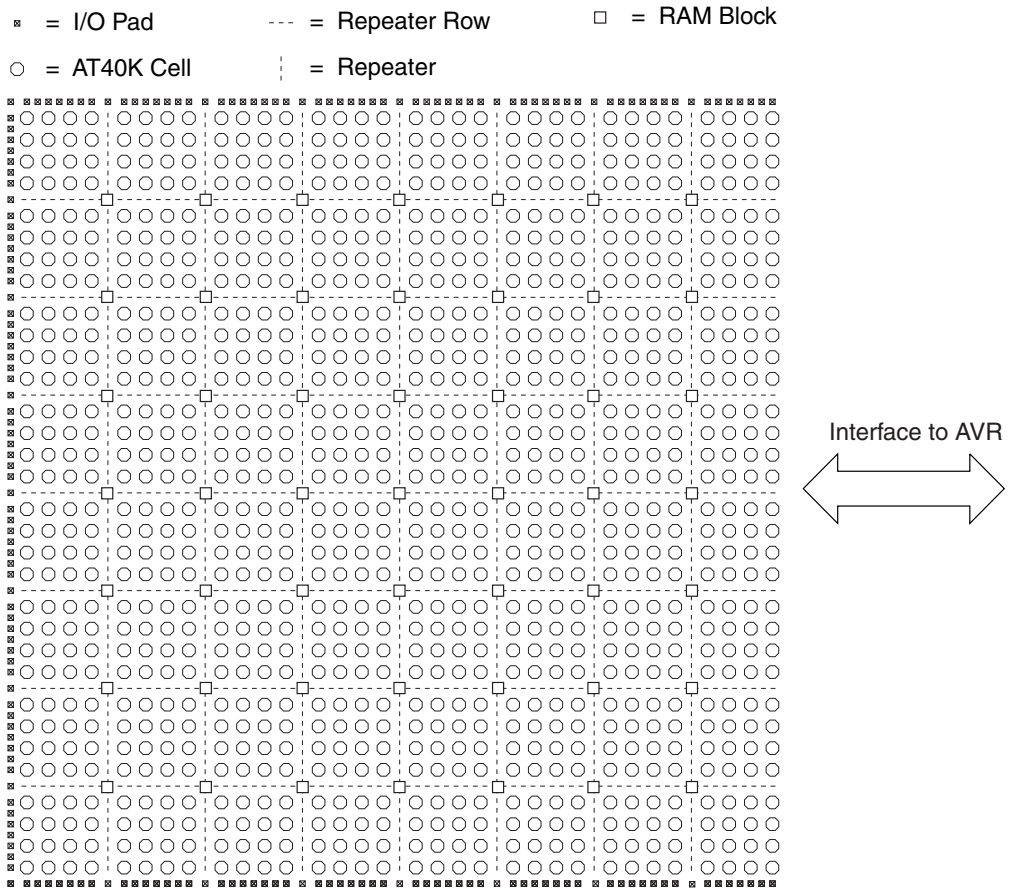

Figure 4 depicts one of five identical FPGA busing planes. Each plane has three bus resources: a local-bus resource (the middle bus) and two express-bus resources. Bus resources are connected via repeaters. Each repeater has connections to two adjacent local-bus segments and two express-bus segments. Each local-bus segment spans four cells and connects to consecutive repeaters. Each express-bus segment spans eight cells and bypasses a repeater. Repeaters regenerate signals and can connect any bus to any other bus (all pathways are legal) on the same plane. Although not shown, a local bus can bypass a repeater via a programmable pass gate, allowing long on-chip tri-state buses to be created. Local/local turns are implemented through pass gates in the cell-bus interface. Express/express turns are implemented through separate pass gates distributed throughout the array.

Figure 4. Busing Plane (One of Five)

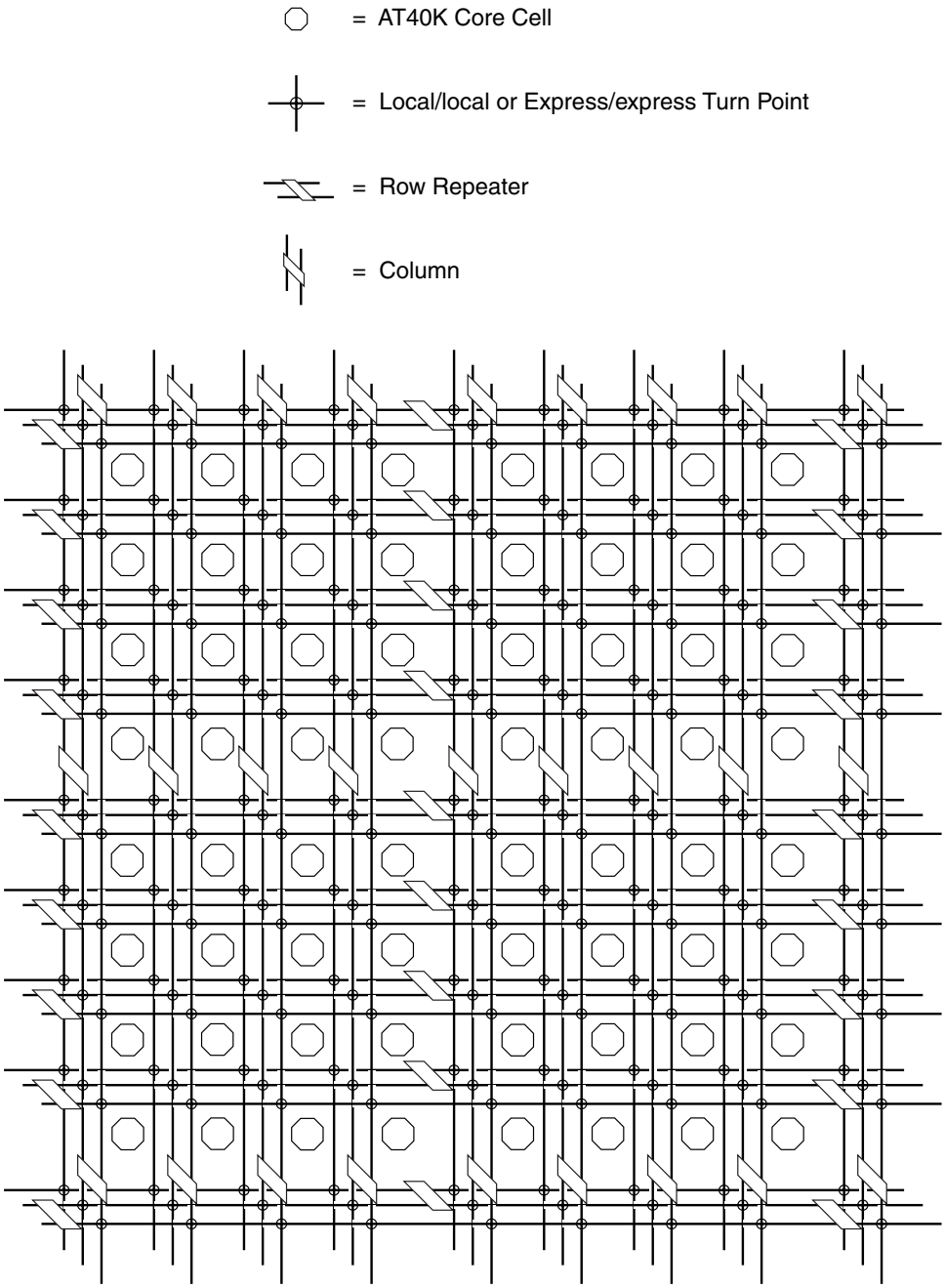

Cell Connections

Figure 5(a) depicts direct connections between an FPGA cell and its eight nearest neighbors. Figure 5(b) shows the connections between a cell five horizontal local buses (one per busing plane) and five vertical local buses (one per busing plane).

Figure 5. Cell Connections

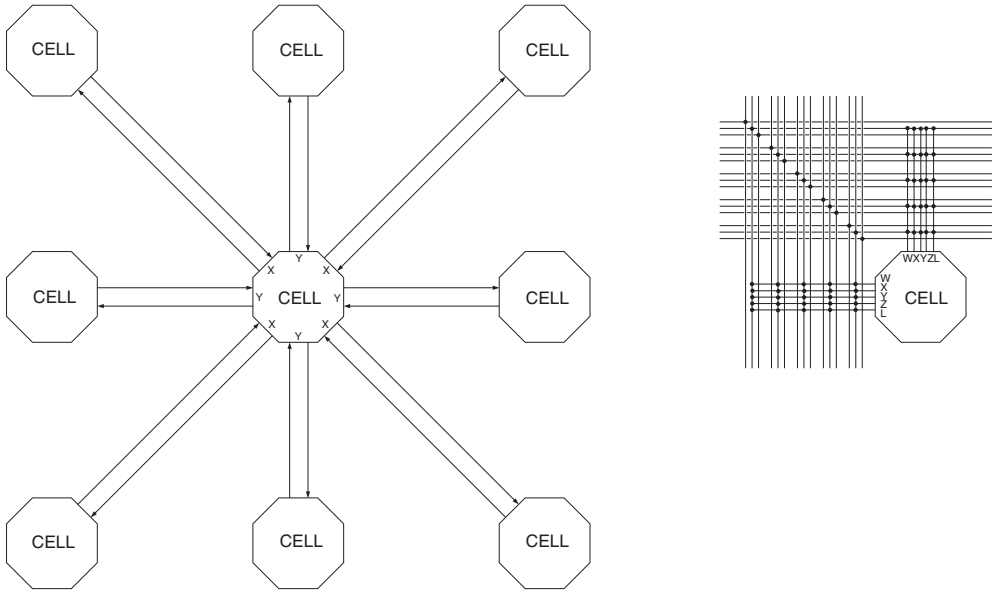

(a) Cell-to-Cell Connections

(b) Cell-to-Bus Connections

The Cell

Figure 6 depicts the AT40K FPGA embedded core logic cell. Configuration bits for separate muxes and pass gates are independent. All permutations of programmable muxes and pass gates are legal. Vn is connected to the vertical local bus in plane n. Hn is connected to the horizontal local bus in plane n. A local/local turn in plane n is achieved by turning on the two pass gates connected to Vn and Hn. Up to five simultaneous local/local turns are possible.

The logic cell can be configured in several “modes”. The logic cell flexibility makes the FPGA architecture well suited to all digital design application areas, see Figure 7. The IDS layout tool automatically optimizes designs to utilize the cell flexibility.

Figure 6. The Cell

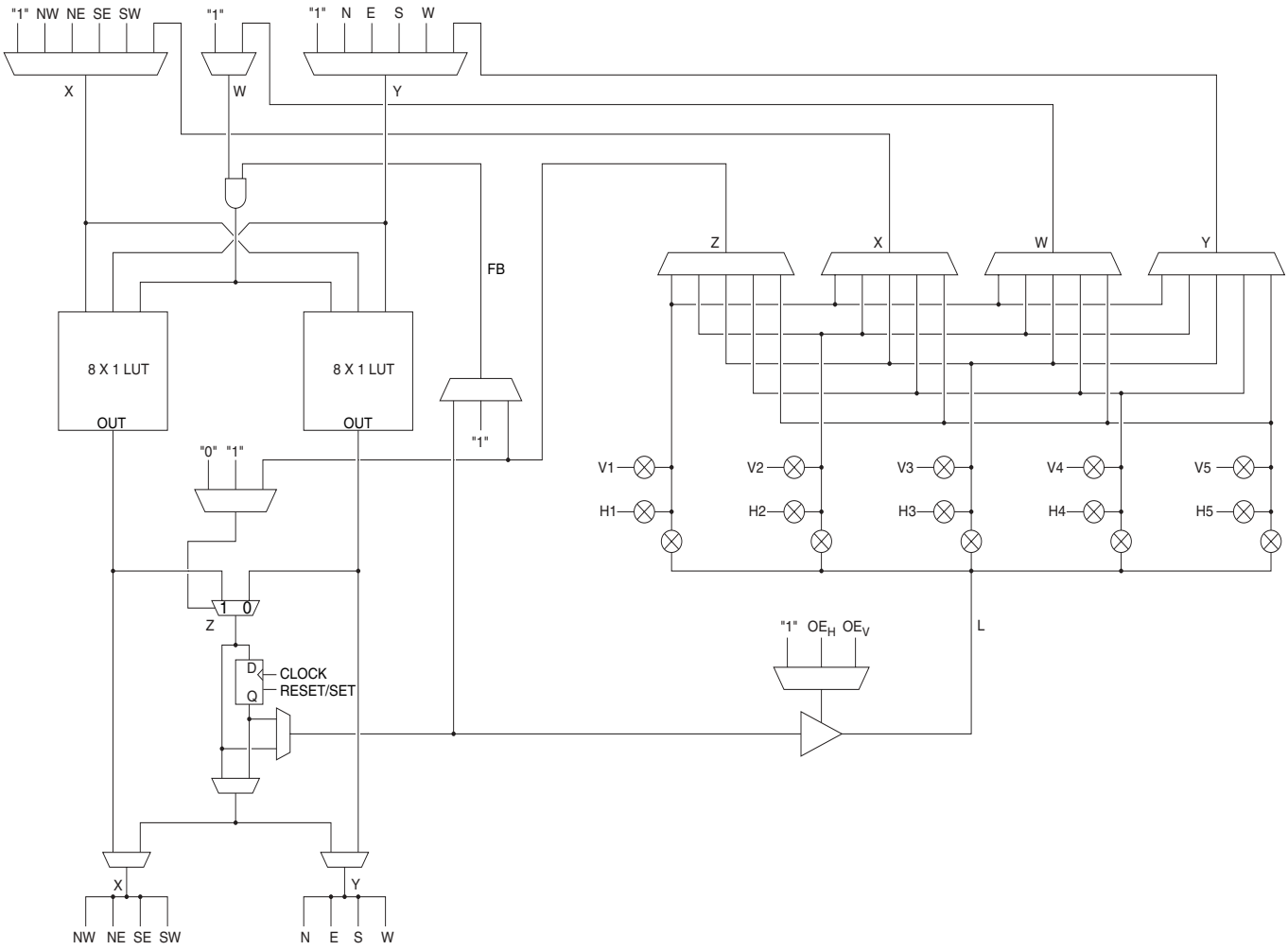

X = Diagonal Direct Connect or Bus
Y = Orthogonal Direct Connect or Bus
W = Bus Connection
Z = Bus Connection
FB = Internal Feedback

Figure 7. Some Single Cell Modes

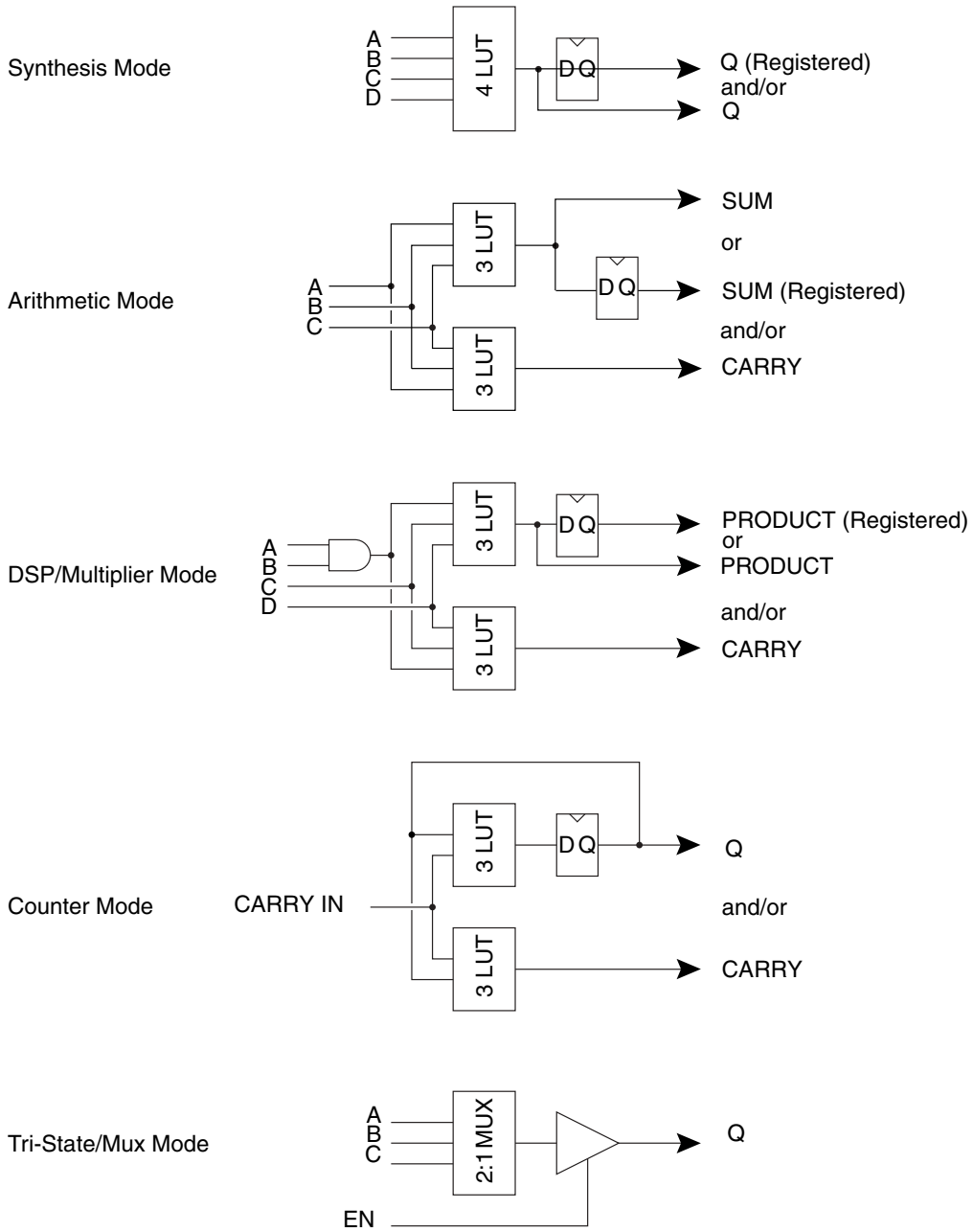

RAM

There are two types of RAM in the FPSLIC device: the FreeRAM distributed through the FPGA Core and the SRAM shared by the AVR and FPGA. The SRAM is described in "FPGA/AVR Interface and System Control" on page 21. The 32 x 4 dual-ported FPGA FreeRAM blocks are dispersed throughout the array and are connected in each sector as shown in Figure 8. A four-bit Input Data bus connects to four horizontal local buses (Plane 1) distributed over four sector rows. A four-bit Output Data bus connects to four horizontal local buses (Plane 2) distributed over four sector rows. A five-bit Input-address bus connects to five vertical express buses in the same sector column (column 3). A five-bit Output-address bus connects to five vertical express buses in the same column. WAddr (Write Address) and RAddr (Read Address) alternate positions in horizontally aligned RAM blocks. For the left-

most RAM blocks, RAddr is on the left and WAddr is on the right. For the right-most RAM blocks, WAddr is on the left and RAddr is tied off. For single-ported RAM, WAddr is the READ/WRITE address port and Din is the (bi-directional) data port. The right-most RAM blocks can be used only for single-ported memories. $\overline{WE}$ and $\overline{OE}$ connect to the vertical express buses in the same column on Plane V_1 and V_2, respectively. WAddr, RAddr, $\overline{WE}$ and $\overline{OE}$ connect to express buses that are full length at array edge.

Reading and writing the 32 x 4 dual-port RAM are independent of each other. Reading the 32 x 4 dual-port RAM is completely asynchronous. Latches are transparent; when Load is logic 1, data flows through; when Load is logic 0, data is latched. Each bit in the 32 x 4 dual-port RAM is also a transparent latch. The front-end latch and the memory latch together and form an edge-triggered flip-flop. When a bit nibble is (Write) addressed and LOAD is logic 1 and $\overline{WE}$ is logic 0, DATA flows through the bit. When a nibble is not (Write) addressed or LOAD is logic 0 or $\overline{WE}$ is logic 1, DATA is latched in the nibble. The two CLOCK muxes are controlled together; they both select CLOCK or they both select “1”. CLOCK is obtained from the clock for the sector-column immediately to the left and immediately above the RAM block. Writing any value to the RAM Clear Byte during configuration clears the RAM, see Figure 5 and Figure 6.

Figure 8. FPGA RAM Connections (One RAM Block)

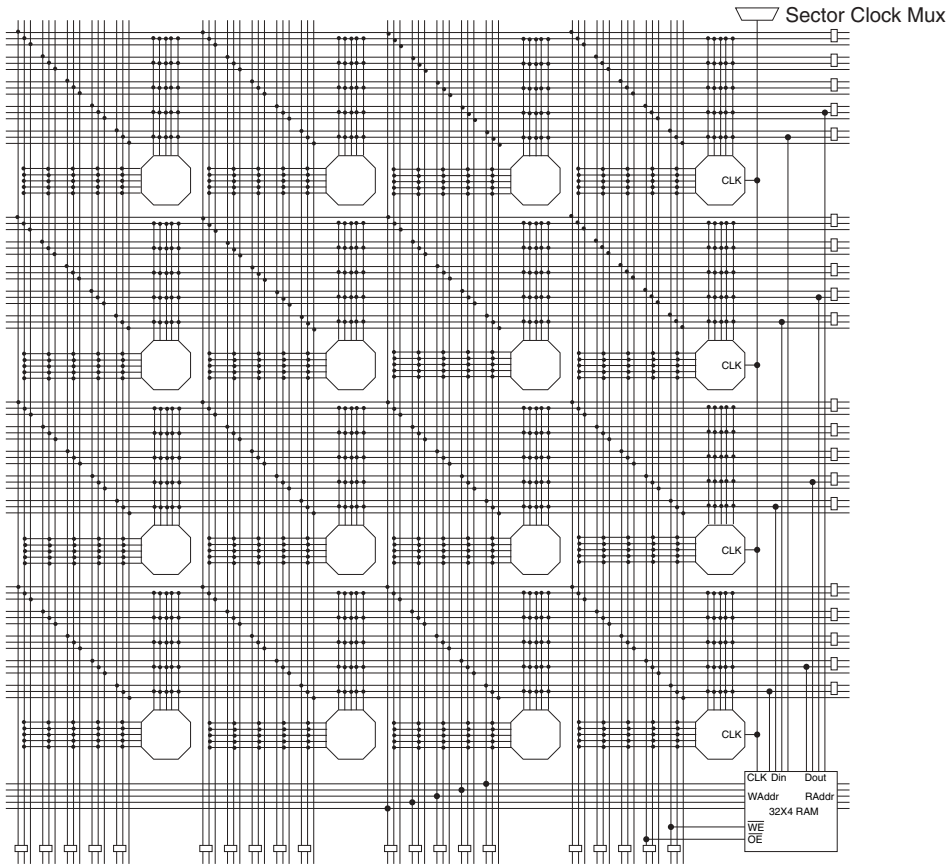

Figure 9. FreeRAM Logic[1]

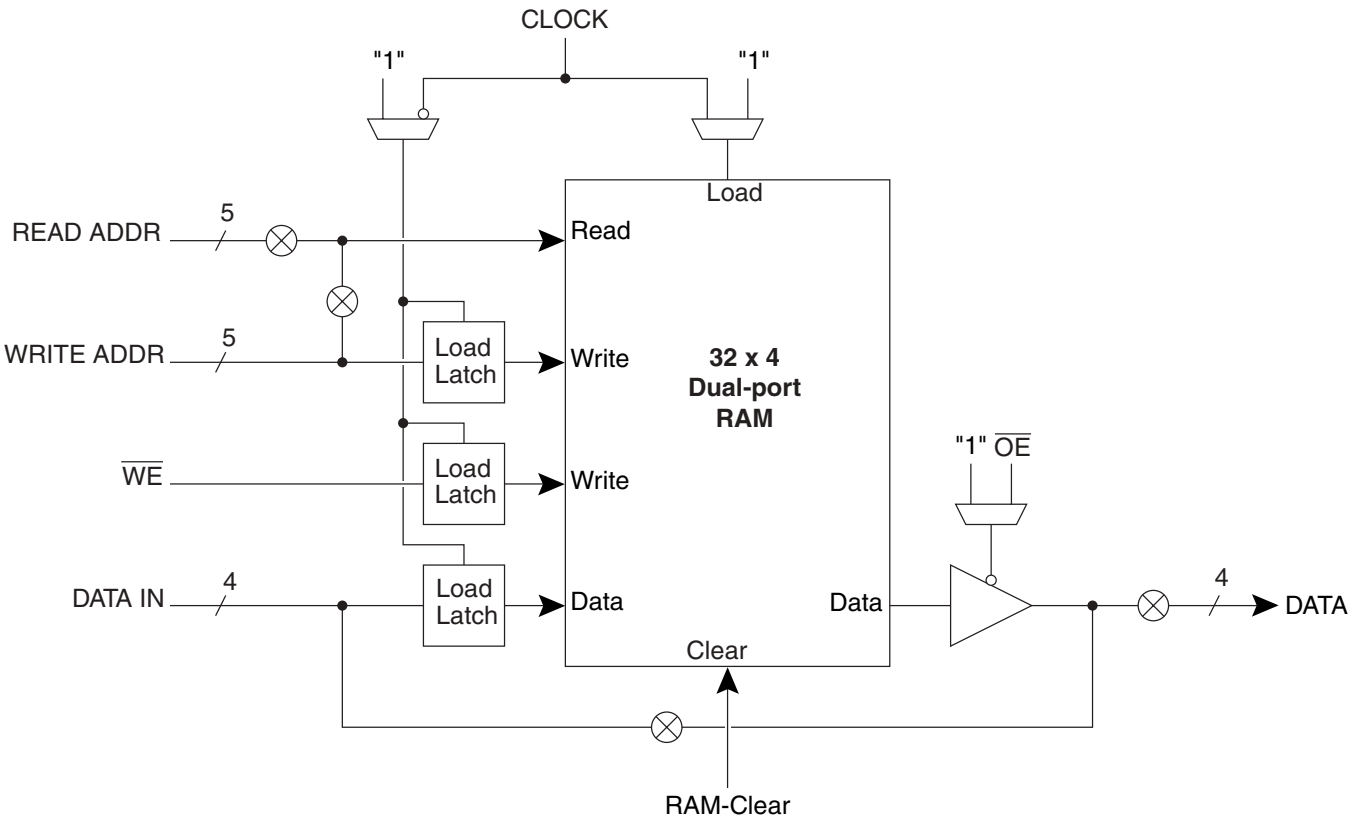

Note: 1. For dual port, the switches on READ ADDR and DATA OUT would be on. The other two would be off. The reverse is true for single port.

Figure 10. FreeRAM Example: 128 x 8 Dual-ported RAM (Asynchronous)[1]

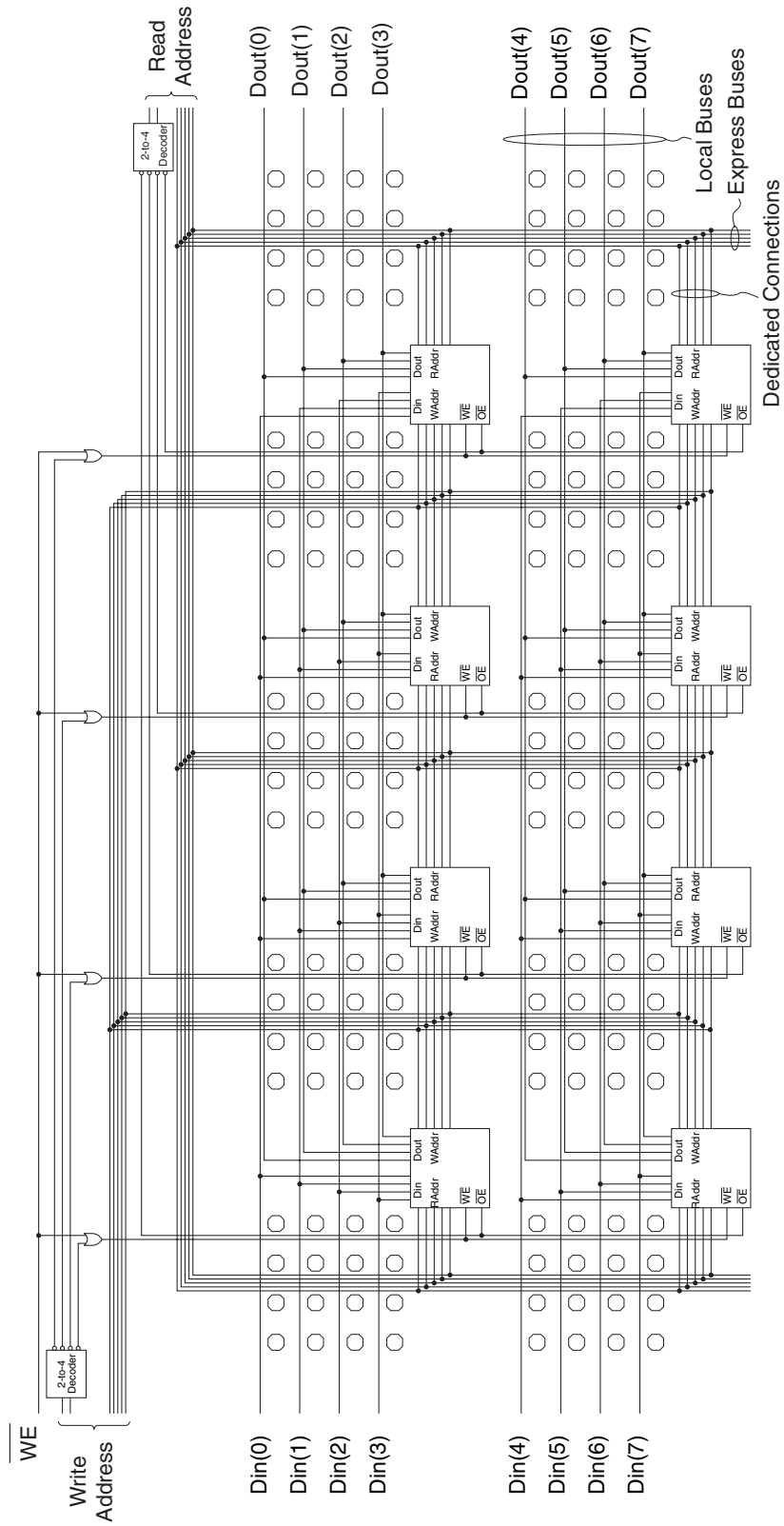

Note: 1. These layouts can be generated automatically using the Macro Generators.

Clocking and Set/Reset

Six of the eight dedicated Global Clock buses (1, 2, 3, 4, 7 and 8) are connected to a dual-use Global Clock pin. In addition, two Global Clock buses (5 and 6) are driven from clock signals generated within the AVR microcontroller core, see Figure 11.

An FPGA core internal signal can be placed on any Global Clock bus by routing that signal to a Global Clock access point in the corners of the embedded core. Each column of the array has a Column Clock selected from one of the eight Global Clock buses. The left edge Column Clock mux has two additional inputs from dual-use pins FCK1, see Figure 8, and FCK2 to provide fast clocking to left-side I/O. Each sector column of four cells can be clocked from a (Plane 4) express bus or from the Column Clock. Clocking to the 4 cells of a sector can be disabled. The Plane 4 express bus used for clocking is half length at the array edge. The clock provided to each sector column of four cells can be either inverted or not inverted. The register in each cell is triggered on a rising clock edge. On power-up, constant “0” is provided to each register’s clock pins. A dedicated Global Set/Reset bus, see Figure 9, can be driven by any USER I/O pad, except those used for clocking, Global or Fast. An internal signal can be placed on the Global Set/Reset bus by routing that signal to the pad programmed as the Global Set/Reset input. Global Set/Reset is distributed to each column of the array. Each sector column of four cells can be Set/Reset by a (Plane 5) express bus or by the Global Set/Reset. The Plane 5 express bus used for Set/Reset is half length at array edge. The Set/Reset provided to each sector column of four cells can be either inverted or not inverted. The function of the Set/Reset input of a register (either Set or Reset) is determined by a configuration bit for each cell. The Set/Reset input of a register is Active Low (logic 0). Setting or resetting of a register is asynchronous. On power-up, a logic 1 (High) is provided by each register, i.e., all registers are set at power-up.

Figure 11. FPGA Clocks from AVR

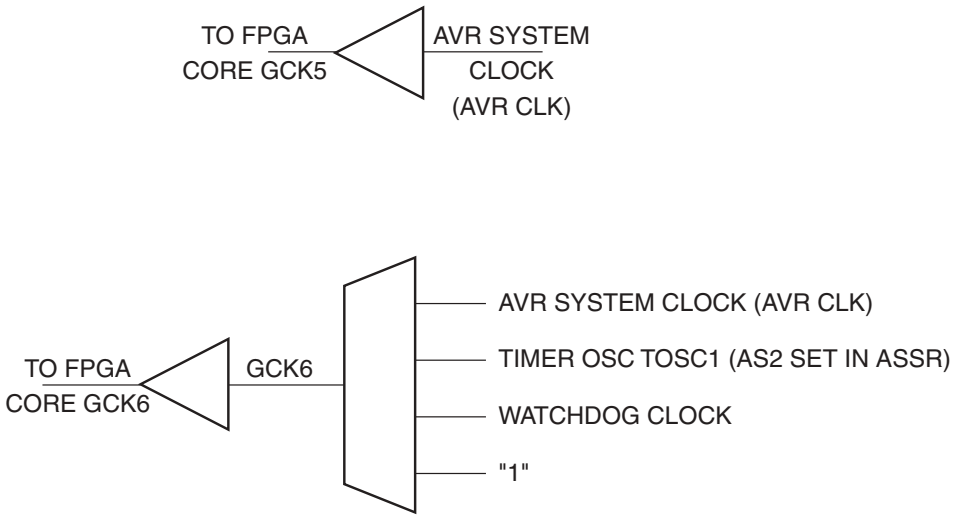

The FPGA clocks from the AVR are effected differently in the various sleep modes of the AVR, see Table 3.

The source clock into the FPGA GCK5 and GCK6 will determine what happens during the various power-down modes of the AVR.

If the XTAL clock input is used as an FPGA clock (GCK5 or GCK6) in Idle mode, it will still be running. In Power-down/save mode the XTAL clock input will be off.

If the TOSC clock input is used as an FPGA clock (GCK6) in Idle mode, it will still be running in Power-save mode but will be off in Power-down mode.

If the Watchdog Timer is used as an FPGA clock (GCK6) and was enabled in the AVR, it will be running in all sleep modes.

Table 3. Clock Activity in Various Modes

Mode	Clock Source	GCK5	GCK6
Idle	XTAL	Active	Active
	TOSC	Not Available	Active
	WDT	Not Available	Active
Power-save	XTAL	Inactive	Inactive
	TOSC	Not Available	Active
	WDT	Not Available	Active
Power-down	XTAL	Inactive	Inactive
	TOSC	Not Available	Inactive
	WDT	Not Available	Active

Figure 12. Clocking (for One Column of Cells)

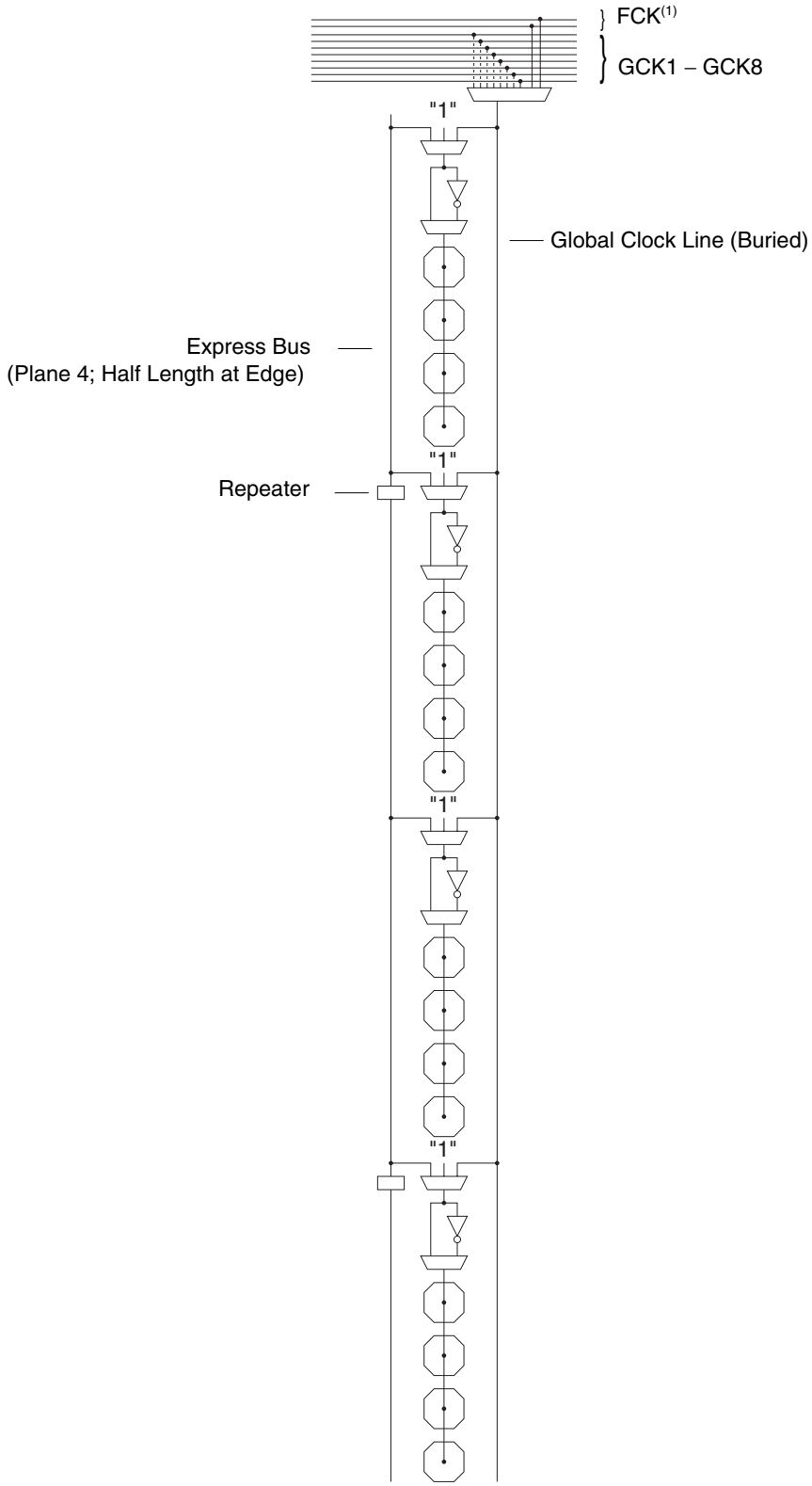

Note: 1. Two on left edge column of the embedded FPGA array only.

Figure 13. Set/Reset (for One Column of Cells)

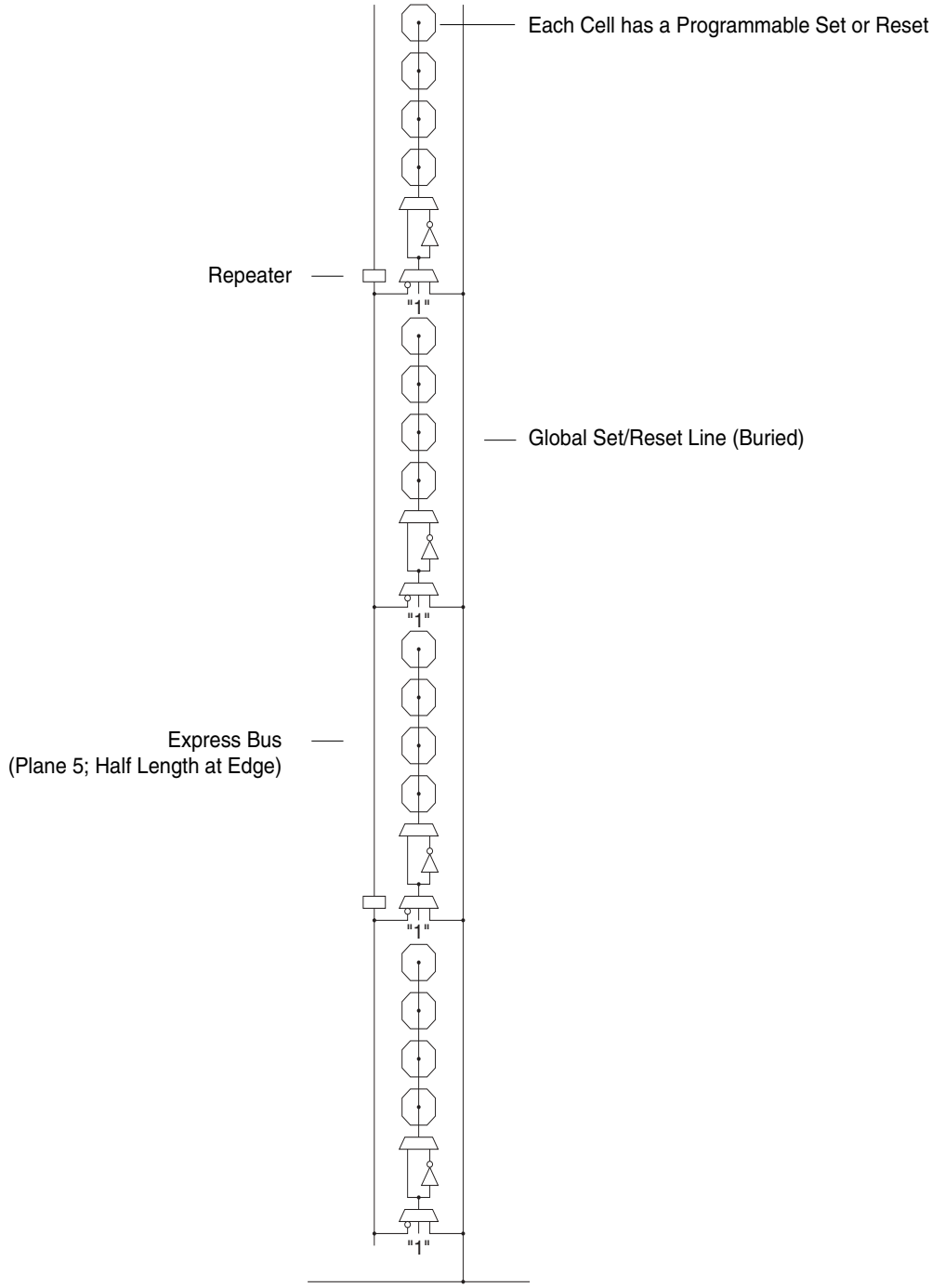

Some of the bus resources on the embedded FPGA core are used as dual-function resources. Table 4 shows which buses are used in a dual-function mode and which bus plane is used. The FPGA software tools are designed to automatically accommodate dual-function buses in an efficient manner.

Table 4. Dual-function Buses

Function	Type	Plane(s)	Direction	Comments
Cell Output Enable	Local	5	Horizontal and Vertical	
FreeRAM Output Enable	Express	2	Vertical	Bus full length at array edge bus in first column to left of RAM block
FreeRAM Write Enable	Express	1	Vertical	Bus full length at array edge bus in first column to left of RAM block
FreeRAM Address	Express	1 - 5	Vertical	Buses full length at array edge buses in second column to left of RAM block
FreeRAM Data In	Local	1	Horizontal	
FreeRAM Data Out	Local	2	Horizontal	
Clocking	Express	4	Vertical	Bus full length at array edge
Set/Reset	Express	5	Vertical	Bus full length at array edge

Figure 14. Primary I/O

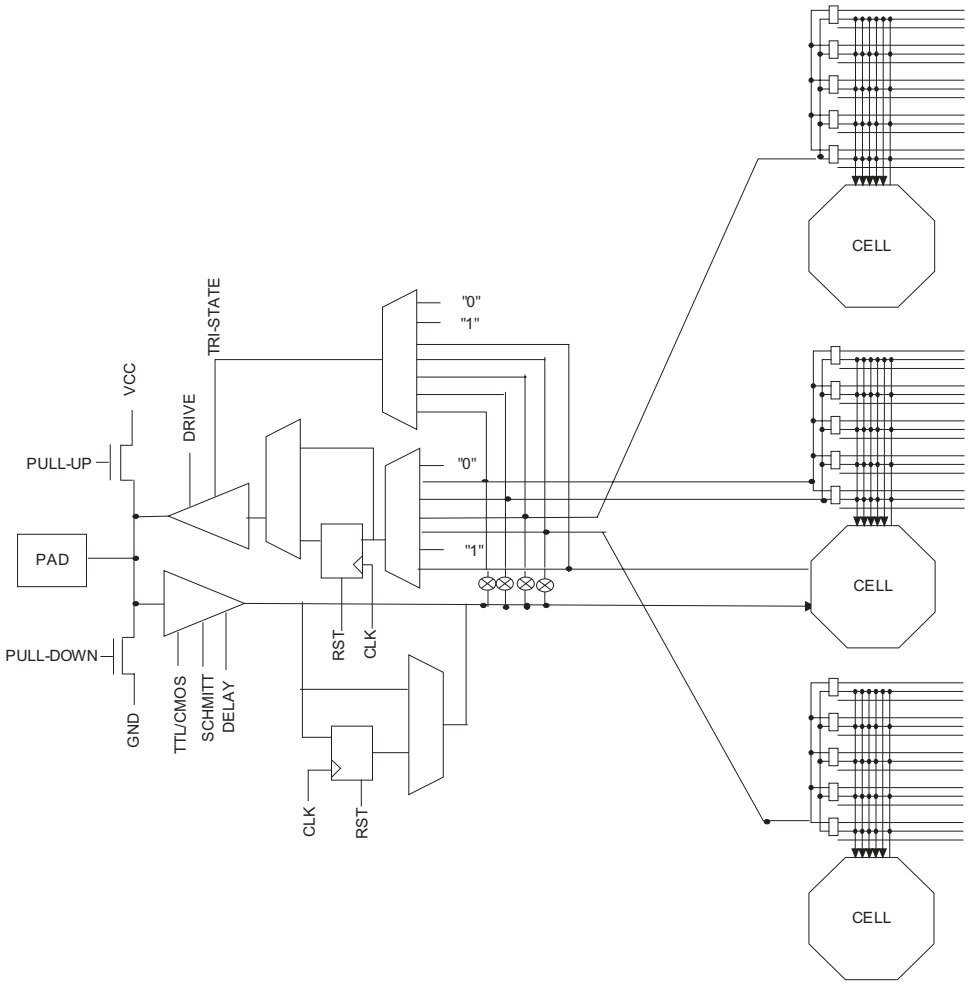

Figure 15. Secondary I/O

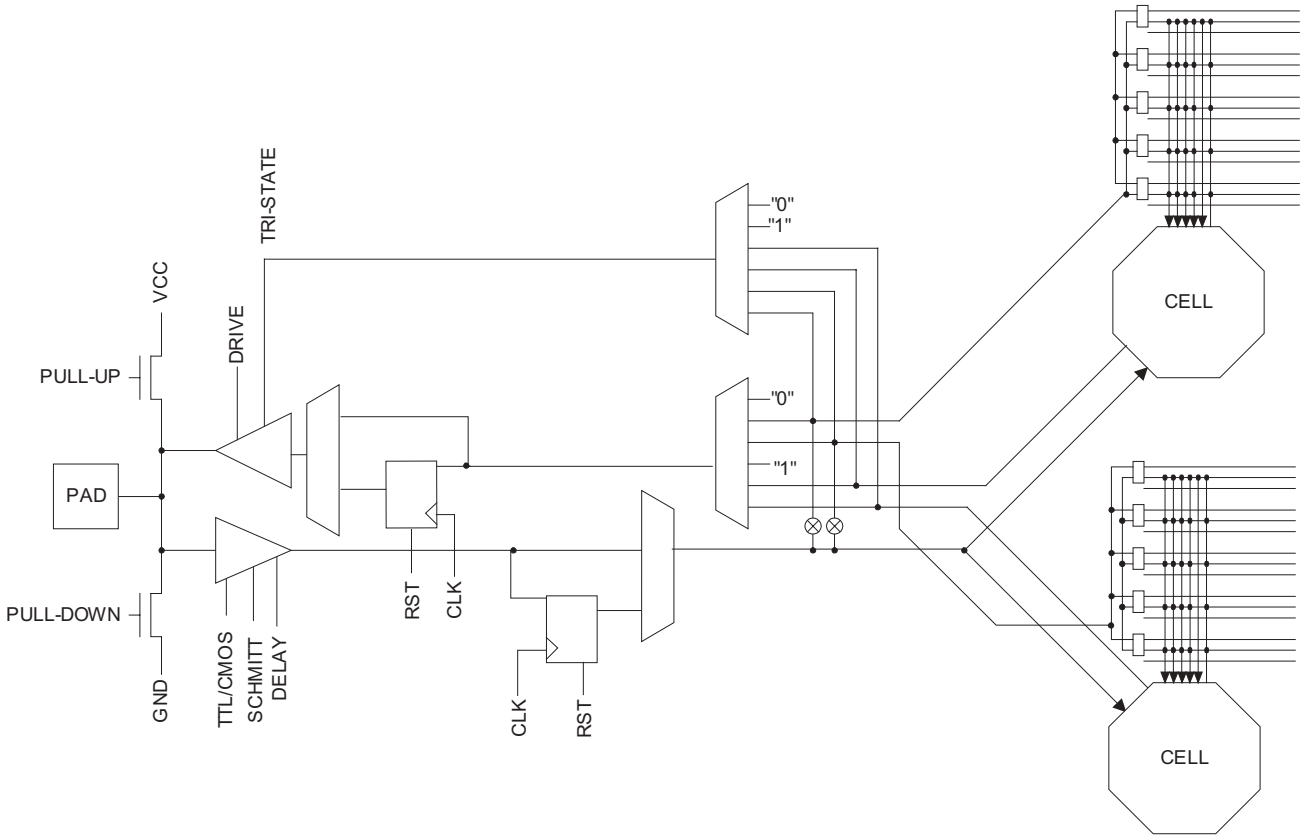

Figure 16. Primary and Secondary I/Os

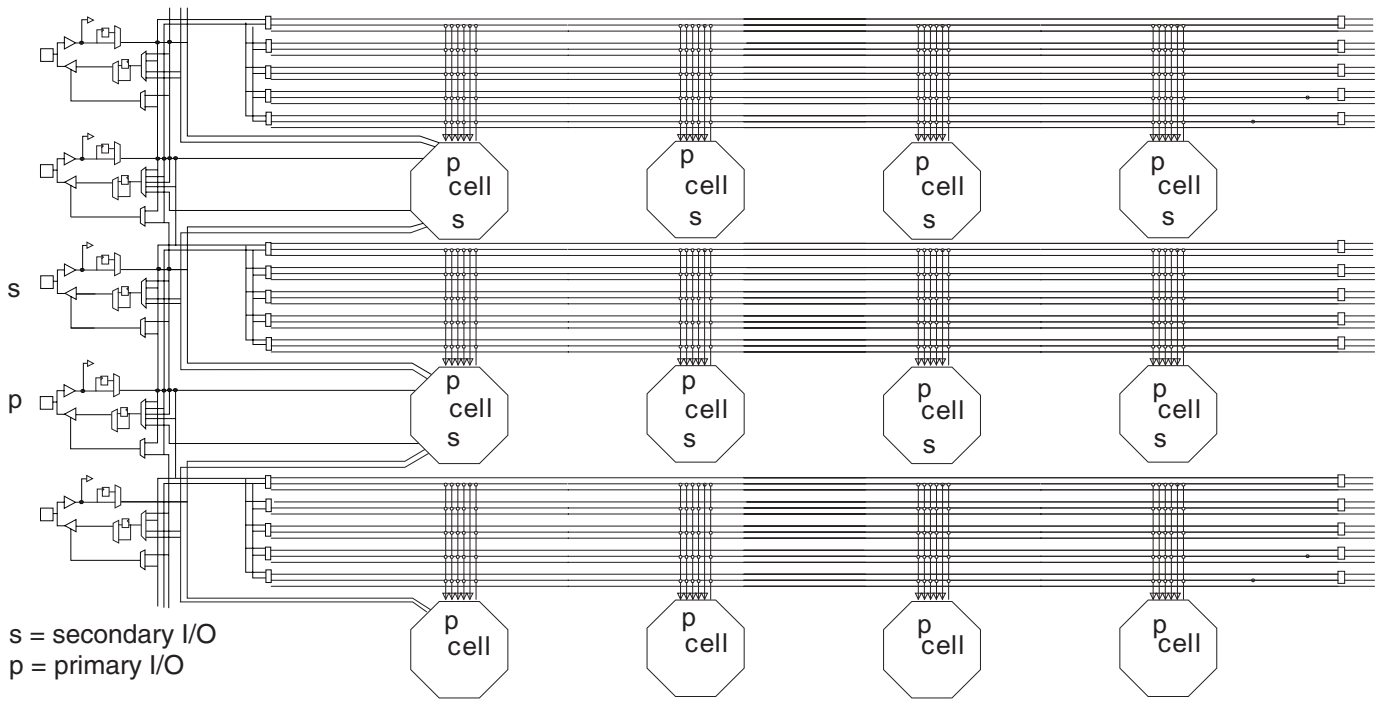

Figure 17. Corner I/Os

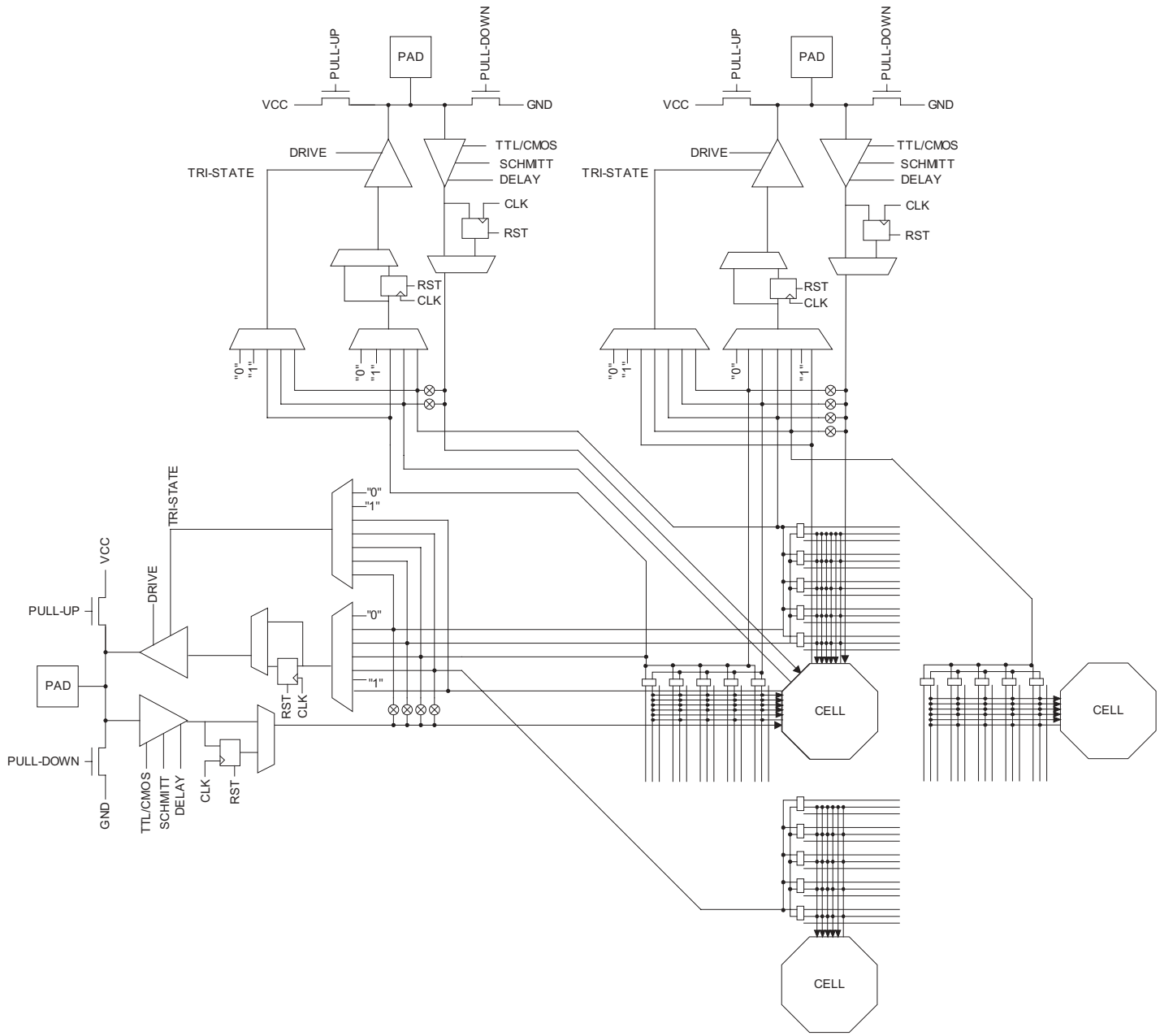

FPGA/AVR Interface and System Control

The FPGA and AVR share a flexible interface which allows for many methods of system integration.

- Both FPGA and AVR share access to the 15 ns dual-port SRAM.
- The AVR data bus interfaces directly into the FPGA busing resources, effectively treating the FPGA as a large I/O device. Users have complete flexibility on the types of additional peripherals which are placed and routed inside the FPGA user logic.
- Up to 16 decoded address lines are provided into the FPGA.
- Up to 16 interrupts are available from the FPGA to the AVR.
- The AVR can reprogram the FPGA during operation to create a dynamic reconfigurable system (Cache Logic).

FPGA/AVR Interface– Memory-mapped Peripherals

The FPGA core can be directly accessed by the AVR core, see Figure 18. Four memory locations in the AVR memory map are decoded into 16 select lines (8 for AT94K05) and are presented to the FPGA along with the AVR 8-bit data bus. The FPGA can be used to create additional custom peripherals for the AVR microcontroller through this interface. In addition there are 16 interrupt lines (8 for AT94K05) from the FPGA back into the AVR interrupt controller. Programmable peripherals or regular logic can use these interrupt lines. Full support for programmable peripherals is available within the System Designer tool suite.

Figure 18. FPGA/AVR Interface: Interrupts and Addressing

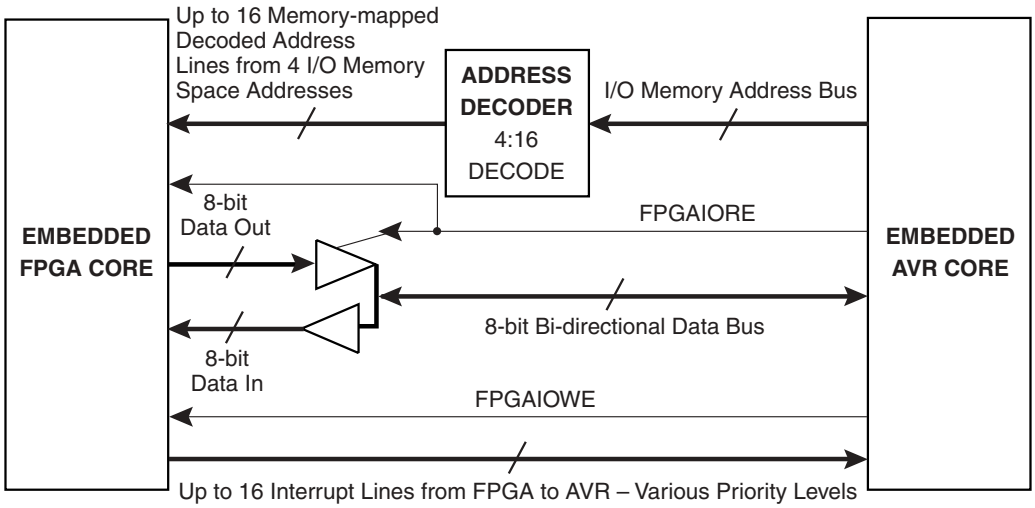

The FPGA I/O selection is controlled by the AVR. This is described in detail beginning on page 53. The FPGA I/O interrupts are described beginning on page 57.

Program and Data SRAM

Up to 36 Kbytes of 15 ns dual-port SRAM reside between the FPGA and the AVR. This SRAM is used by the AVR for program instruction and general-purpose data storage. The AVR is connected to one side of this SRAM; the FPGA is connected to the other side. The port connected to the FPGA is used to store data without using up bandwidth on the AVR system data bus.

The FPGA core communicates directly with the data SRAM(1) block, viewing all SRAM memory space as 8-bit memory.

Note: 1. The unused bits for the FPGA-SRAM address must tie to ‘0’ because there is no pull-down circuitry.

For the AT94K10 and AT94K40, the internal program and data SRAM is divided into three blocks: 10 Kbytes x 16 dedicated program SRAM, 4 Kbytes x 8 dedicated data SRAM and 6 Kbytes x 16 or 12 Kbytes x 8 configurable SRAM, which may be swapped between program and data memory spaces in 2 Kbytes x 16 or 4 Kbytes x 8 partitions.

For the AT94K05, the internal program and data SRAM is divided into three blocks: 4 Kbytes 16 dedicated program SRAM, 4 Kbytes x 8 dedicated data SRAM and 6 Kbytes x 16 or 12 Kbytes x 8 configurable SRAM, which may be swapped between program and data memory spaces in 2 Kbytes x 16 or 4 Kbytes x 8 partitions.

The addressing scheme for the configurable SRAM partitions prevents program instructions from overwriting data words and vice versa. Once configured (SCR41:40 – See “System Control Register – FPGA/AVR” on page 30.), the program memory space remains isolated from the data memory space. SCR41:40 controls internal muxes. Write enable signals allow the memory to be safely segmented. Figure 19 shows the FPSLIC configurable allocation SRAM memory.

Figure 19. FPSLIC Configurable Allocation SRAM Memory(1)(2)

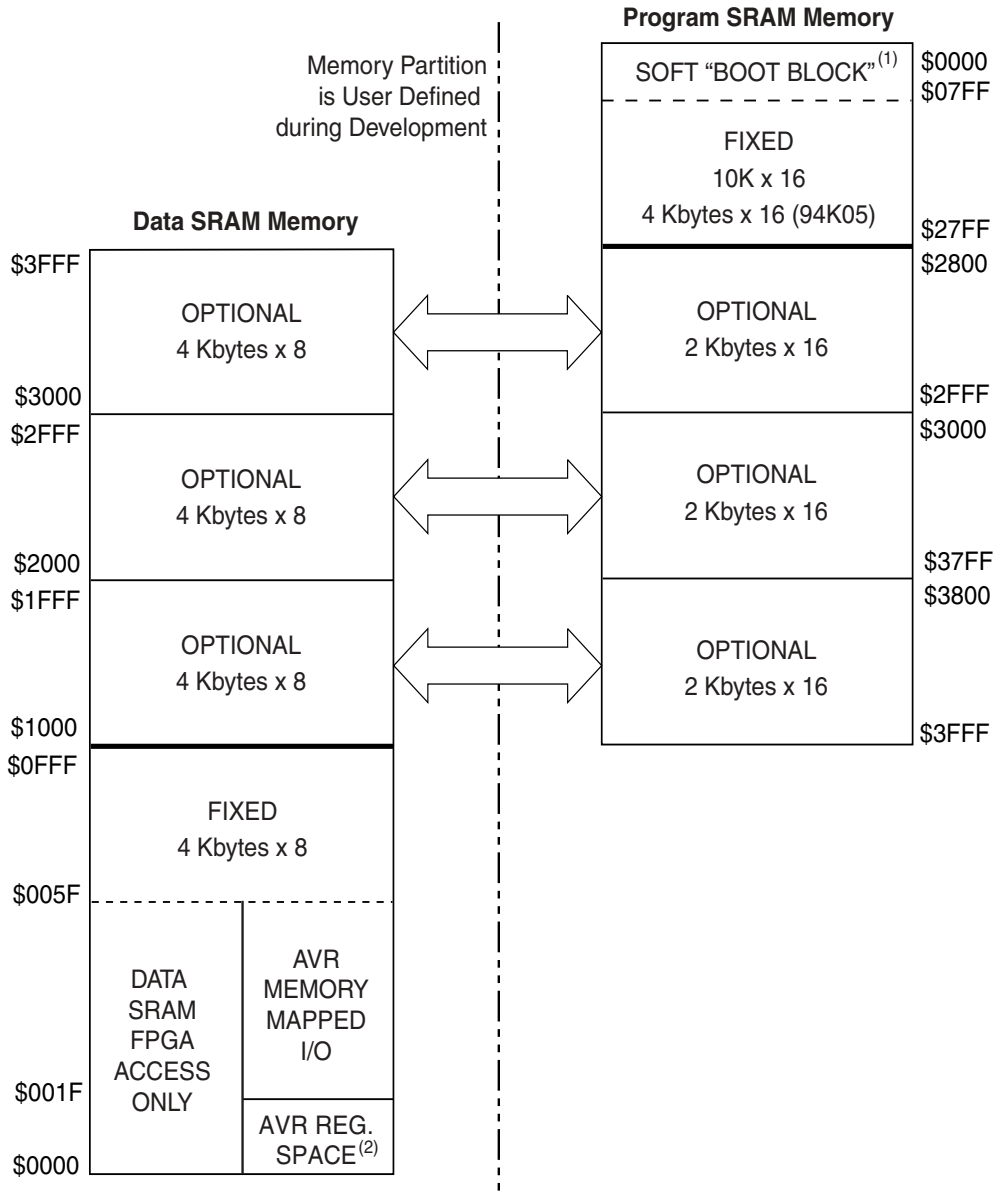

Notes: 1. The Soft "BOOT BLOCK" is an area of memory that is first loaded when the part is powered up and configured. The remainder of the memory can be reprogrammed while the device is in operation for switching functions in and out of memory. The Soft "BOOT BLOCK" can only be programmed by a full device configuration on power-up.

2. The lower portion of the Data memory is not shared between the AVR and FPGA. The AVR uses addresses $0000 - $001F for the AVR CPU general working registers. $001F - $005F are the addresses used for Memory Mapped I/O and store the information in dedicated registers. Therefore, on the FPGA side $0000 - $005F are available for data that is only needed by the FPGA.

Data SRAM Access by FPGA – FPGAFrame Mode

The FPGA user logic has access to the data SRAM directly through the FPGA side of the dual-port memory, see Figure 20. A single bit in the configuration control register (SCR63 – see "System Control Register – FPGA/AVR" on page 30) enables this interface. The interface is disabled during configuration downloads. Express buses on the East edge of the array are used to interface the memory. Full read and write access is available. To allow easy implementation, the interface itself is dedicated in routing resources, and is controlled in the System Designer software suite using the AVR FPGA interface dialog.

Figure 20. Internal SRAM Access – Normal Use

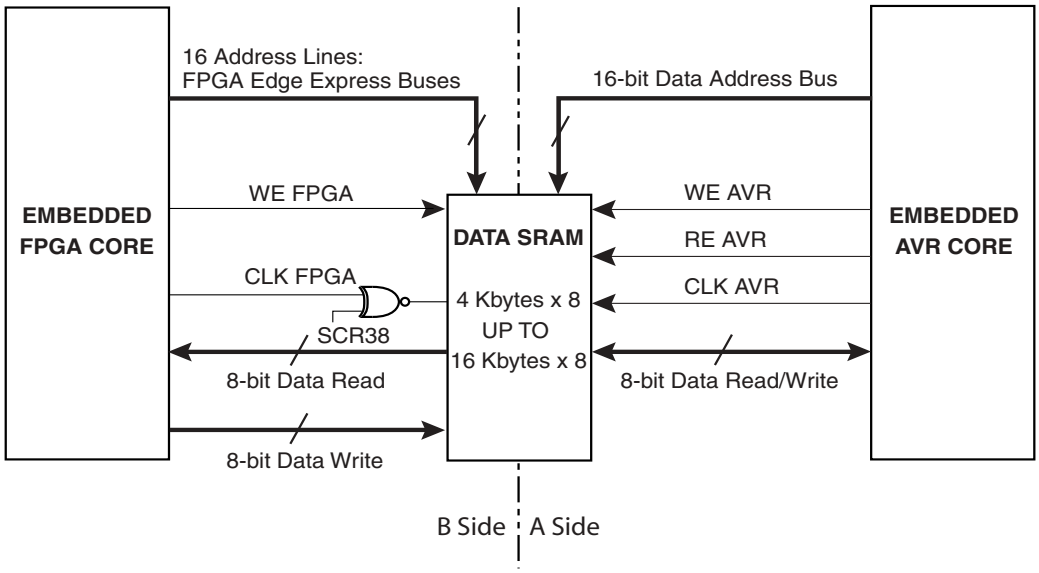

Once the SCR63 bit is set there is no additional read enable from the FPGA side. This means that the read is always enabled. You can also perform a read or write from the AVR at the same time as an FPGA read or write. If there is a possibility of a write address being accessed by both devices at the same time, the designer should add arbitration to the FPGA Logic to control who has priority. In most cases the AVR would be used to restrict access by the FPGA using the FMXOR bit, see "Software Control Register – SFTCR" on page 51. You can read from the same location from both sides simultaneously.

SCR bit 38 controls the polarity of the clock to the SRAM from the AT40K FPGA.

SRAM Access by FPGA/AVR

This option is used to allow for code (Program Memory) changes.

Accessing and Modifying the Program Memory from the AVR

The FPSLIC SRAM is up to 36 x 8 Kbytes of dual port, see Figure 19):

- The A side (port) is accessed by the AVR.
- The B side (port) is accessed by the FPGA/Configuration Logic.
- The B side (port) can be accessed by the AVR with ST and LD instructions in DBG mode for code self-modify.

Structurally, the [(n • 2) Kbytes 8] memory is built from (n)2 Kbytes 8 blocks, numbered SRAM0 through SRAM(n).

A Side

The A side is partitioned into Program memory and Data memory:

- Program memory is 16-bit words.
- Program memory address $0000 always starts in the highest two SRAMs (n - 1, n) [SRAMn - 1 (low byte) and SRAMn (high byte)] (SRAM labels are for layout, the addressing scheme is transparent to the AVR PC).
- System configuration determines the higher addresses for program memory:
  – SCR bits 41 = 0 : 40 = 0, program memory extended from $2800 - $3FFF
  – SCR bits 41 = 0 : 40 = 1, program memory extended from $2800 - $37FF
  – SCR bits 41 = 1 : 40 = 0, program memory extended from $2800 - $2FFF
  – SCR bits 41 = 1 : 40 = 1, no extra program memory
- Extended program memory is always lost to extended data memory from SRAM2/3 down to SRAM6/7, see Table 5.

Table 5. AVR Program Decode for SRAM 2:7 (16K16)

Address Range	SRAM	Comments
$3FFF - $3800 $3FFF - $3800	02 03	CR41:40 = 00
$37FF - $3000 $37FF - $3000	04 05	CR41:40 = 00,01
$2FFF - $2800 $2FFF - $2800	06 07	CR41:40 = 00,01,10
$27FF - $2000 $27FF - $2000 $1FFF - $1800 $1FFF - $1800 $17FF - $1000 $17FF - $1000 $0FFF - $0800 $0FFF - $0800 $07FF - $0000 $07FF - $0000	08 09 10 11 12 13 14 15 16 n = 17	AVR Program Read-only AVR Program Read-only AVR Program Read-only AVR Program Read-only AVR Program Read-only AVR Program Read-only AVR Program Read-only AVR Program Read-only AVR Program Read-only AVR Program Read-only

- Data memory is 8-bit words.
- Data memory address $0000 always starts in SRAM0 (SRAM labels are for layout, the addressing scheme is transparent to AVR data read/write).
- System configuration determines the higher address for data memory:
  – SCR bits 41 = 0 : 40 = 0, no extra data memory
  – SCR bits 41 = 0 : 40 = 1, data memory extended from $1000 - $1FFF
  – SCR bits 41 = 1 : 40 = 0, data memory extended from $1000 - $2FFF
  – SCR bits 41 = 1 : 40 = 1, data memory extended from $1000 - $3FFF
- Extended data memory is always lost to extended program memory from SRAM7 up to SRAM2 in 2 x SRAM blocks, see Table 6.

Table 6. AVR Data Decode for SRAM 0:17 (16K8)

Address Range	SRAM	Comments
$07FF – $0000 $0FFF – $0800	00 01	AVR Data Read/Write AVR Data Read/Write
$17FF – $1000 $1FFF – $1800	02 03	CR41:40 = 11,10,01
$27FF – $2000 $2FFF – $2800	04 05	CR41:40 = 11,10
$37FF – $3000 $3FFF – $3800	06 07	CR41:40 = 11

B Side

The B side is not partitioned; the FPGA (and AVR debug mode) views the memory space as 36 x 8 Kbytes.

- The B side is accessed by the FPGA/Configuration Logic.
- The B side is accessed by the AVR with ST and LD instructions in DBG mode for code self-modify.

  To activate the debug mode and allow the AVR to access the program code space (with ST – see Figure 21 – and LD – see Figure 22 – instructions), the DBG bit (bit 1) of the SFTCR $3A ($5A) register has to be set. When this bit is set, SCR36 and SCR37 are ignored – you can overwrite anything in the AVR program memory.

  The FPGA memory access interface should be disabled while in debug mode. This is to ensure that there is no contention between the FPGA address and data signals and the AVR-generated address and data signals. To ensure the AVR has control over the “B side” memory interface, the FMXOR bit (bit 3) of the SFTCR $3A ($5A) register should be used in conjunction with the SCR63 system control register bit.

  The FMXOR bit is XORed with the System Control Register’s Enable FPGA SRAM Interface bit (SCR63). The behavior when this bit is set to 1 is dependent on how the SCR was initialized. If the Enable FPGA SRAM Interface bit (SCR63) in the SCR is 0, the FMXOR bit enables the FPGA SRAM Interface when set to 1. If the Enable FPGA SRAM Interface bit in the SCR is 1, the FMXOR bit disables the FPGA SRAM Interface when set to 1. During AVR reset, the FMXOR bit is cleared by the hardware.

  Even though the FPGA (and AVR debug mode) views the memory space as 36 x 8 Kbytes, an awareness of the 2K x 8 partitions (or SRAM labels) is required if Frame (and AVR debug mode) read/writes are to be meaningful to the AVR.
- AVR data to FPGA addressing is 1:1 mapping.
- AVR program to FPGA addressing requires 16-bit to 8-bit mapping and an understanding of the partitions in Table 7.

Table 7. Summary Table for AVR and FPGA SRAM Addressing

SRAM	FPGA and AVR DBG Address Range	AVR Data Address Range	AVR PC Address Range
00	$0000 - $07FF	$0000 - $07FF	
01	$0800 - $0FFF	$0800 - $0FFF	
02(1)	$1000 - $17FF	$1000 - $17FF	$3800 - $3FFF (LS Byte)
03(1)	$1800 - $1FFF	$1800 - $1FFF	$3800 - $3FFF (MS Byte)
04(1)	$2000 - $27FF	$2000 - $27FF	$3000 - $37FF (LS Byte)

Table 7. Summary Table for AVR and FPGA SRAM Addressing (Continued)

SRAM	FPGA and AVR DBG Address Range	AVR Data Address Range	AVR PC Address Range
05(1)	$2800 - $2FFF	$2800 - $2FFF	$3000 - $37FF (MS Byte)
06(1)	$3000 - $37FF	$3000 - $37FF	$2800 - $2FFF (LS Byte)
07(1)	$3800 - $3FFF	$3800 - $3FFF	$2800 - $2FFF (MS Byte)
08	$4000 - $47FF		$2000 - $27FF (LS Byte)
09	$4800 - $4FFF		$2000 - $27FF (MS Byte)
10	$5000 - $57FF		$1800 - $1FFF (LS Byte)
11	$5800 - $5FFF		$1800 - $1FFF (MS Byte)
12	$6000 - $67FF		$1000 - $17FF (LS Byte)
13	$6800 - $6FFF		$1000 - $17FF (MS Byte)
14	$7000 - $77FF		$0800 - $0FFF (LS Byte)
15	$7800 - $7FFF		$0800 - $0FFF (MS Byte)
16	$8000 - $87FF		$0000 - $07FF (LS Byte)
17 = n	$8800 - $8FFF		$0000 - $07FF (MS Byte)

Note: 1. Whether these SRAMs are “Data” or “Program” depends on the SCR40 and SCR41 values.

Example: Frame (and AVR debug mode) write of instructions to associated AVR PC addresses, see Table 8 and Table 9.

Table 8. AVR PC Addresses

AVR PC	Instruction
0FFE	9B28
0FFF	CFFE
1000	B300
1001	9A39

Table 9. Frame Addresses

Frame Address	Frame Data
77FE	28
77FF	FE
6000	00
6001	39
7FFE	9B
7FFF	CF
6800	B3
6801	9A

Figure 21. AVR SRAM Data Memory Write Using “ST” Instruction

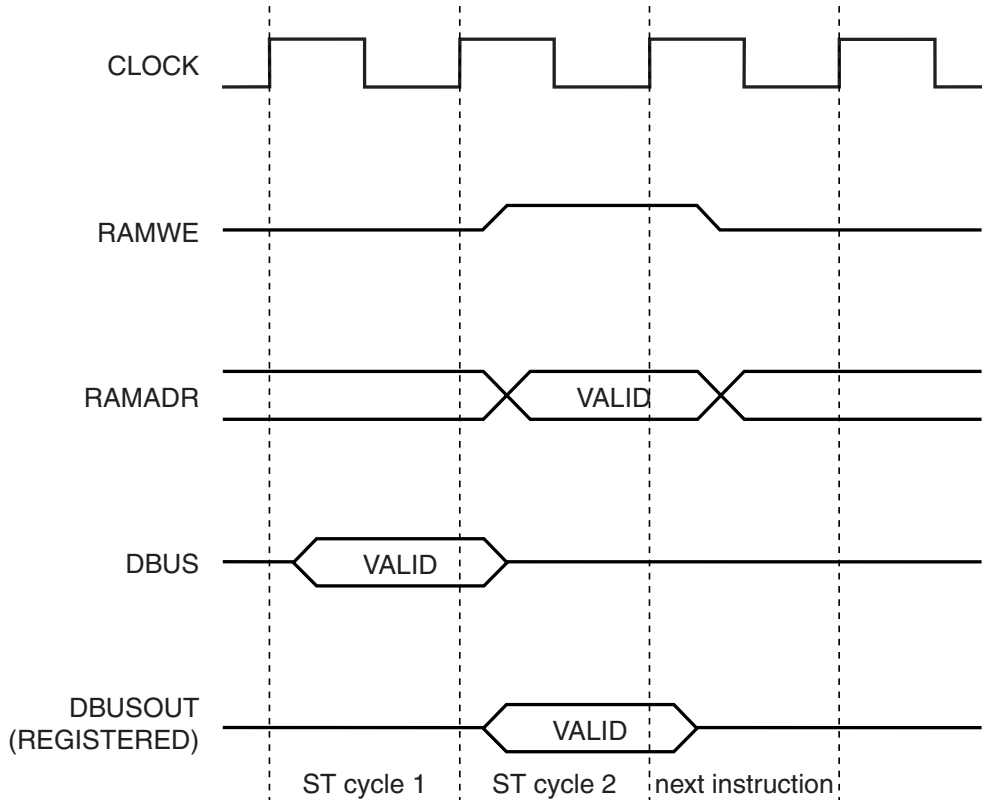

Figure 22. AVR SRAM Data Memory Read Using “LD” Instruction

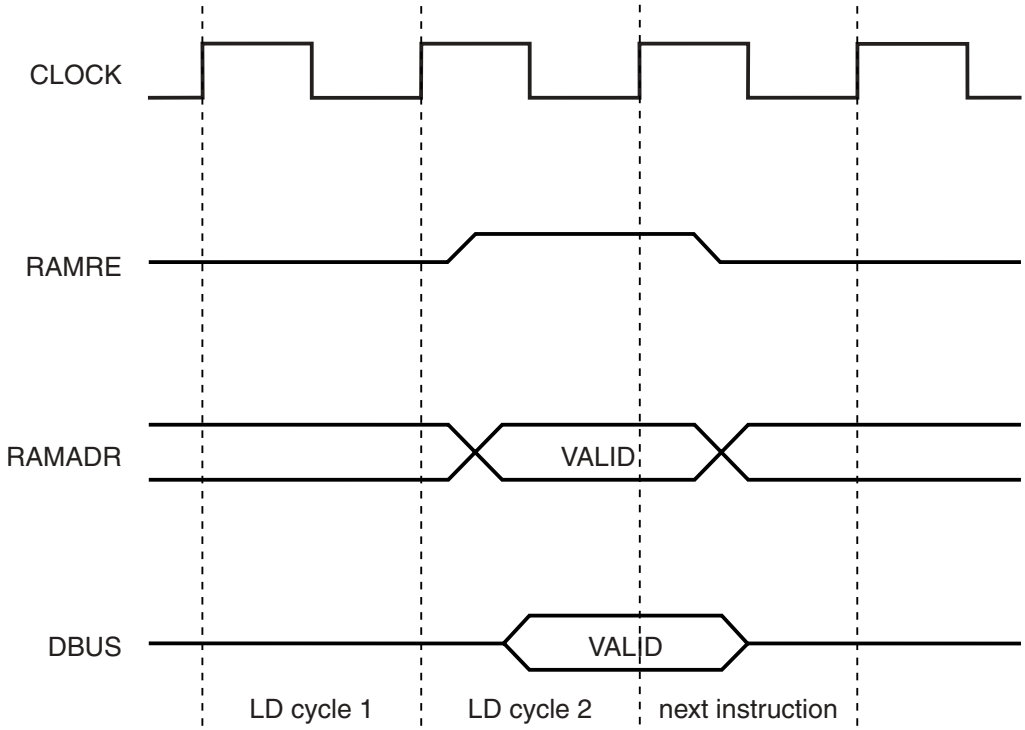

AVR Cache Mode

The AVR has the ability to cache download the FPGA memory. The AVR has direct access to the data buses of the FPGA's configuration SRAM and is able to download bitstreams. AVR Cache access of configuration SRAM is not available during normal configuration downloads. The Cache Logic port in the AVR is located in the I/O memory map. Three registers, FPGAX, FPGAY FPGAZ, control the address written to inside the FPGA; and FPGAD in the AVR memory map controls the Data. Registers FPGAX, FPGAY and FPGAZ are write only, see Figure 23.

Figure 23. Internal FPGA Configuration Access

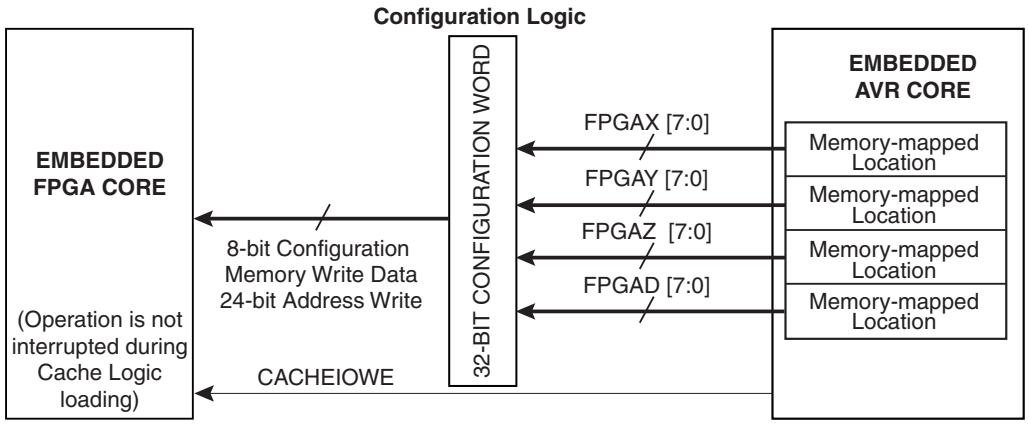

The AVR Cache Logic access mode is write only. Transfers may be aborted at any time due to AVR program wishes or external interrupts.

The FPGA CHECK function is not supported by the AVR Cache mode.

A typical application for this mode is for the AVR to accept serial data through a UART for example, and port it as configuration data to the FPGA, thereby affecting a download, or allowing reconfigurable systems where the FPGA is updated algorithmically by the AVR. For more information, refer to the "AT94K Series Configuration" application note available on the Atmel web site, at: http://www.atmel.com/atmel/acrobat/doc2313.pdf.

Resets

The user must have the flexibility to issue resets and reconfiguration commands to separate portions of the device. There are two Reset pins on the FPSLIC device. The first, RESET, results in a clearing of all FPGA configuration SRAM and the System Control Register, and initiates a download if in mode 0. The AVR will stop and be reset.

A second reset pin, AVRReset, is implemented to reset the AVR portion of the FPSLIC functional blocks. This is described in the "Reset Sources" on page 61.

System Control

Configuration Modes

The AT94K family has four configuration modes controlled by mode pins M0 and M2, see Table 10.

Table 10. Configuration Modes

M2	M0	Name
0	0	Mode 0 - Master Serial
0	1	Mode 1 - Slave Serial Cascade
1	0	Mode 2 - Reserved
1	1	Mode 3 - Reserved

Modes 2 and 3 are reserved and are used for factory test.

Modes 0 and 1 are pin-compatible with the appropriate AT40K counterpart. AVR I/O will be taken over by the configuration logic for the CHECK pin during both modes.

Refer to the “AT94K Series Configuration” application note for details on downloading bitstreams.

System Control Register – FPGA/AVR

The configuration control register in the FPSLIC consists of 8 bytes of data, which are loaded with the FPGA/Prog. Code at power-up from external nonvolatile memory. FPSLIC System Control Register values, see Table 11, can be set in the System Designer software. Recommended defaults are included in the software.

Table 11. FPSLIC System Control Register

Bit	Description
SCR0 - SCR1	Reserved
SCR2	0 = Enable Cascading 1 = Disable Cascading SCR2 controls the operation of the dual-function I/O CSOUT. When SCR2 is set, the CSOUT pin is not used by the configuration during downloads, set this bit for configurations where two or more devices are cascaded together. This applies for configuration to another FPSLIC device or to an FPGA.
SCR3	0 = Check Function Enabled 1 = Check Function Disabled SCR3 controls the operation of the CHECK pin and enables the Check Function. When SCR3 is set, the dual use AVR I/O/CHECK pin is not used by the configuration during downloads, and can be used as AVR I/O.
SCR4	0 = Memory Lockout Disabled 1 = Memory Lockout Enabled SCR4 is the Security Flag and controls the writing and checking of configuration memory during any subsequent configuration download. When SCR4 is set, any subsequent configuration download initiated by the user, whether a normal download or a CHECK function download, causes the INIT pin to immediately activate. CON is released, and no further configuration activity takes place. The download sequence during which SCR4 is set is NOT affected. The Control Register write is also prohibited, so bit SCR4 may only be cleared by a power-on reset or manual reset.
SCR5	Reserved

Table 11. FPSLIC System Control Register

Bit	Description
SCR6	0 = OTS Disabled 1 = OTS Enabled Setting SCR6 makes the OTS (output tri-state) pin an input which controls the global tri-state control for all user I/O. This junction allows the user at any time to tristate all user I/O and isolate the chip.
SCR7 - SCR12	Reserved
SCR13	0 = CCLK Normal Operation 1 = CCLK Continues After Configuration. Setting bit SCR13 allows the CCLK pin to continue to run after configuration download is completed. This bit is valid for Master mode, mode 0 only. The CCLK is not available internally on the device. If it is required in the design, it must be connected to another device I/O.
SCR14 - SCR15	Reserved
SCR16 - SCR23	0 = GCK 0:7 Always Enabled 1 = GCK 0:7 Disabled During Internal and External Configuration Download. Setting SCR16:SCR23 allows the user to disable the input buffers driving the global clocks. The clock buffers are enabled and disabled synchronously with the rising edge of the respective GCK signal, and stop in a High “1” state. Setting one of these bits disables the appropriate GCK input buffer only and has no effect on the connection from the input buffer to the FPGA array.
SCR24 - SCR25	0 = FCK 0:1 Always Enabled 1 = FCK 0:1 Disabled During Internal and External Configuration Download. Setting SCR24:SCR25 allows the user to disable the input buffers driving the fast clocks. The clock buffers are enabled and disabled synchronously with the rising edge of the respective FCK signal, and stop in a High “1” state. Setting one of these bits disables the appropriate FCK input buffer only and has no effect on the connection from the input buffer to the FPGA array.
SCR26	0 = Disable On-chip Debugger 1 = Enable On-chip Debugger. JTAG Enable, SCR27, must also be set (one) and the configuration memory lockout, SCR4, must be clear (zero) for the user to have access to internal scan chains.
SCR27	0 = Disable TAP at user FPGA I/O Ports 1 = Enable TAP at user FPGA I/O Ports. Device ID scan chain and AVR I/O boundary scan chain are available. The user must set (one) the On-chip Debug Enable, SCR26, and must keep the configuration memory lockout, SCR4, clear (zero) for the user to have access to internal scan chains.
SCR28 - SCR29	Reserved
SCR30	0 = Global Set/Reset Normal 1 = Global Set/Reset Active (Low) During Internal and External Configuration Download. SCR30 allows the Global set/reset to hold the core DFFs in reset during any configuration download. The Global set/reset net is released at the end of configuration download on the rising edge of CON, if set.
SCR31	0 = Disable I/O Tri-state 1 = I/O Tri-state During (Internal and External) Configuration Download. SCR31 forces all user defined I/O pins to go tri-state during configuration download. Tri-state is released at the end of configuration download on the rising edge of CON, if set.

Table 11. FPSLIC System Control Register

Bit	Description
SCR32 - SCR34	Reserved
SCR35	0 = AVR Reset Pin Disabled 1 = AVR Reset Pin Enabled (active Low Reset) SCR35 allows the AVR Reset pin to reset the AVR only.
SCR36	0 = Protect AVR Program SRAM 1 = Allow Writes to AVR Program SRAM (Excluding Boot Block) SCR36 protects AVR program code from writes by the FPGA.
SCR37	0 = AVR Program SRAM Boot Block Protect 1 = AVR Program SRAM Boot Block Allows Overwrite
SCR38	0 = (default) Frame Clock Inverted to AVR Data/Program SRAM 1 = Non-inverting Clock Into AVR Data/Program SRAM
SCR39	Reserved
SCR40 - SCR41	SCR41 = 0, SCR40 = 0 16 Kbytes x 16 Program/4 Kbytes x 8 Data SCR41 = 0, SCR40 = 1 14 Kbytes x 16 Program/8 Kbytes x 8 Data SCR41 = 1, SCR40 = 0 12 Kbytes x 16 Program/12 Kbytes x 8 Data SCR41 = 1, SCR40 = 1 10 Kbytes x 16 Program/16 Kbytes x 8 Data SCR40 : SCR41 AVR program/data SRAM partitioning (set by using the AT94K Device Options in System Designer).
SCR 42 - SCR47	Reserved
SCR48	0 = EXT-INT0 Driven By Port E<4> 1 = EXT-INT0 Driven By INTP0 pad SCR48 : SCR53 Defaults dependent on package selected.
SCR49	0 = EXT-INT1 Driven By Port E<5> 1 = EXT-INT1 Driven By INTP1 pad SCR48 : SCR53 Defaults dependent on package selected.
SCR50	0 = EXT-INT2 Driven By Port E<6> 1 = EXT-INT2 Driven By INTP2 pad SCR48 : SCR53 Defaults dependent on package selected.
SCR51	0 = EXT-INT3 Driven By Port E<7> 1 = EXT-INT3 Driven By INTP3 pad SCR48 : SCR53 Defaults dependent on package selected.
SCR52	0 = UART0 Pins Assigned to Port E<1:0> 1 = UART0 Pins Assigned to UART0 pads SCR48 : SCR53 Defaults dependent on package selected.
SCR53	0 = UART1 Pins Assigned to Port E<3:2> 1 = UART1 Pins Assigned to UART1 pads SCR48 : SCR53 Defaults dependent on package selected. On packages less than 144-pins, there is reduced access to AVR ports. Port D is not available externally in the smallest package and Port E becomes dual-purpose I/O to maintain access to the UARTs and external interrupt pins. The Pin List (East Side) on page 177 shows exactly which pins are available in each package.
SCR54	0 = AVR Port D I/O With 6 mA Drive 1 = AVR Port D I/O With 20 mA Drive
SCR55	0 = AVR Port E I/O With 6 mA Drive 1 = AVR Port E I/O With 20 mA Drive

Table 11. FPSLIC System Control Register

Bit	Description
SCR56	0 = Disable XTAL Pin ($R_{feedback}$) 1 = Enable XTAL Pin ($R_{feedback}$)
SCR57	0 = Disable TOSC2 Pin ($R_{feedback}$) 1 = Enable TOSC2 Pin ($R_{feedback}$)
SCR58 - SCR59	Reserved
SCR60 - SCR61	SCR61 = 0, SCR60 = 0 “1” SCR61 = 0, SCR60 = 1 AVR System Clock SCR61 = 1, SCR60 = 0 Timer Oscillator Clock (TOSC1)(1) SCR61 = 1, SCR60 = 1 Watchdog Clock Global Clock 6 mux select (set by using the AT94K Device Options in System Designer). Note: 1. The AS2 bit must be set in the ASSR register.
SCR62	0 = Disable CacheLogic Writes to FPGA by AVR 1 = Enable CacheLogic Writes to FPGA by AVR
SCR63	0 = Disable Access (Read and Write) to SRAM by FPGA 1 = Enable Access (Read and Write) to SRAM by FPGA

AVR Core and Peripherals

- AVR Core
- Watchdog Timer/On-chip Oscillator
- Oscillator-to-Internal Clock Circuit
- Oscillator-to-Timer/Counter for Real-time Clock
- 16-bit Timer/Counter and Two 8-bit Timer/Counters
- Interrupt Unit
- Multiplier
- UART (0)
- UART (1)
- I/O Port D (full 8 bits available on 144-pin or higher devices)
- I/O Port E

The embedded AVR core is a low-power CMOS 8-bit microcontroller based on the AVR RISC architecture. The embedded AVR core achieves throughputs approaching 1 MIPS per MHz by executing powerful instructions in a single-clock-cycle, and allows the system architect to optimize power consumption versus processing speed.

The AVR core is based on an enhanced RISC architecture that combines a rich instruction set with 32 x 8 general-purpose working registers. All the 32 x 8 registers are directly connected to the Arithmetic Logic Unit (ALU), allowing two independent register bytes to be accessed in one single instruction executed in one clock cycle. The resulting architecture is more code efficient while achieving throughputs up to ten times faster than conventional CISC microcontrollers.

The embedded AVR core provides the following features: 16 general-purpose I/O lines, 32 x 8 general-purpose working registers, Real-time Counter (RTC), 3 flexible timer/counters with compare modes and PWM, 2 UARTs, programmable Watchdog Timer with internal oscillator, 2-wire serial port, and three software-selectable Power-saving modes. The Idle mode stops the CPU while allowing the SRAM, timer/counters, two-wire serial port, and interrupt system to continue functioning. The Power-down mode saves the register contents but freezes the oscillator, disabling all other chip functions until the next interrupt or hardware reset. In Power-save mode, the timer oscillator continues to run, allowing the user to maintain a timer base while the rest of the device is sleeping.

The embedded AVR core is supported with a full suite of program and system development tools, including C compilers, macro assemblers, program debugger/simulators and evaluation kits.

Instruction Set Nomenclature (Summary)

The complete "AVR Instruction Set" document is available on the Atmel web site, at http://www.atmel.com/atmel/acrobat/doc0856.pdf.

Status Register (SREG)

SREG:	Status register
C:	Carry flag in status register
Z:	Zero flag in status register
N:	Negative flag in status register
V:	Two's complement overflow indicator
S:	N ⊕ V, For signed tests
H:	Half-carry flag in the status register
T:	Transfer bit used by BLD and BST instructions
I:	Global interrupt enable/disable flag

Registers and Operands

Rd:	Destination (and source) register in the register file
Rr:	Source register in the register file
R:	Result after instruction is executed
K:	Constant data
k:	Constant address
b:	Bit in the register file or I/O register ($0 \le b \le 7$)
s:	Bit in the status register ($0 \le s \le 2$)
X,Y,Z:	Indirect address register (X = R27:R26, Y = R29:R28 and Z = R31:R30)
A:	I/O location address
q:	Displacement for direct addressing ($0 \le q \le 63$)

I/O Registers

Stack

STACK:	Stack for return address and pushed registers
SP:	Stack Pointer to STACK

Flags

⇔:	Flag affected by instruction
0:	Flag cleared by instruction
1:	Flag set by instruction
-:	Flag not affected by instruction

The instructions EIJMP, EICALL, ELPM, GPM, ESPM (from the megaAVR Instruction Set) are not supported in the FPSLIC device.

Conditional Branch Summary

Test	Boolean	Mnemonic	Complementary	Boolean	Mnemonic	Comment
Rd > Rr	Z•(N ⊕ V) = 0	BRLT	Rd ≤ Rr	Z+(N ⊕ V) = 1	BRGE	Signed
Rd ≥ Rr	(N ⊕ V) = 0	BRGE	Rd < Rr	(N ⊕ V) = 1	BRLT	Signed
Rd = Rr	Z = 1	BREQ	Rd ≠ Rr	Z = 0	BRNE	Signed
Rd ≤ Rr	Z+(N ⊕ V) = 1	BRGE	Rd > Rr	Z•(N ⊕ V) = 0	BRLT	Signed
Rd < Rr	(N ⊕ V) = 1	BRLT	Rd ≥ Rr	(N ⊕ V) = 0	BRGE	Signed
Rd > Rr	C + Z = 0	BRLO	Rd ≤ Rr	C + Z = 1	BRSH	Unsigned
Rd ≥ Rr	C = 0	BRSH/BRCC	Rd < Rr	C = 1	BRLO/BRCS	Unsigned
Rd = Rr	Z = 1	BREQ	Rd ≠ Rr	Z = 0	BRNE	Unsigned
Rd ≤ Rr	C + Z = 1	BRSH	Rd > Rr	C + Z = 0	BRLO	Unsigned
Rd < Rr	C = 1	BRLO/BRCS	Rd ≥ Rr	C = 0	BRSH/BRCC	Unsigned
Carry	C = 1	BRCS	No Carry	C = 0	BRCC	Simple
Negative	N = 1	BRMI	Positive	N = 0	BRPL	Simple
Overflow	V = 1	BRVS	No Overflow	V = 0	BRVC	Simple
Zero	Z = 1	BREQ	Not Zero	Z = 0	BRNE	Simple

Complete Instruction Set Summary

Instruction Set Summary

Mnemonics	Operands	Description	Operation	Flags	#Clock
Arithmetic and Logic Instructions					
ADD	Rd, Rr	Add without Carry	Rd ← Rd + Rr	Z,C,N,V,S,H	1
ADC	Rd, Rr	Add with Carry	Rd ← Rd + Rr + C	Z,C,N,V,S,H	1
ADIW	Rd, K	Add Immediate to Word	Rd+1:Rd ← Rd+1:Rd + K	Z,C,N,V,S	2
SUB	Rd, Rr	Subtract without Carry	Rd ← Rd - Rr	Z,C,N,V,S,H	1
SUBI	Rd, K	Subtract Immediate	Rd ← Rd - K	Z,C,N,V,S,H	1
SBC	Rd, Rr	Subtract with Carry	Rd ← Rd - Rr - C	Z,C,N,V,S,H	1
SBCI	Rd, K	Subtract Immediate with Carry	Rd ← Rd - K - C	Z,C,N,V,S,H	1
SBIW	Rd, K	Subtract Immediate from Word	Rd+1:Rd ← Rd+1:Rd - K	Z,C,N,V,S	2
AND	Rd, Rr	Logical AND	Rd ← Rd • Rr	Z,N,V,S	1
ANDI	Rd, K	Logical AND with Immediate	Rd ← Rd • K	Z,N,V,S	1
OR	Rd, Rr	Logical OR	Rd ← Rd v Rr	Z,N,V,S	1
ORI	Rd, K	Logical OR with Immediate	Rd ← Rd v K	Z,N,V,S	1
EOR	Rd, Rr	Exclusive OR	Rd ← Rd ⊕ Rr	Z,N,V,S	1
COM	Rd	One's Complement	Rd ← $FF - Rd	Z,C,N,V,S	1
NEG	Rd	Two's Complement	Rd ← $00 - Rd	Z,C,N,V,S,H	1
SBR	Rd, K	Set Bit(s) in Register	Rd ← Rd v K	Z,N,V,S	1

Instruction Set Summary (Continued)

Mnemonics	Operands	Description	Operation	Flags	#Clock
CBR	Rd, K	Clear Bit(s) in Register	Rd ← Rd • ($FFh - K)	Z,N,V,S	1
INC	Rd	Increment	Rd ← Rd + 1	Z,N,V,S	1
DEC	Rd	Decrement	Rd ← Rd - 1	Z,N,V,S	1
TST	Rd	Test for Zero or Minus	Rd ← Rd • Rd	Z,N,V,S	1
CLR	Rd	Clear Register	Rd ← Rd ⊕ Rd	Z,N,V,S	1
SER	Rd	Set Register	Rd ← $FF	None	1
MUL	Rd, Rr	Multiply Unsigned	R1:R0 ← Rd × Rr (UU)	Z,C	2
MULS	Rd, Rr	Multiply Signed	R1:R0 ← Rd × Rr (SS)	Z,C	2
MULSU	Rd, Rr	Multiply Signed with Unsigned	R1:R0 ← Rd × Rr (SU)	Z,C	2
FMUL	Rd, Rr	Fractional Multiply Unsigned	R1:R0 ← (Rd × Rr)<<1 (UU)	Z,C	2
FMULS	Rd, Rr	Fractional Multiply Signed	R1:R0 ← (Rd × Rr)<<1 (SS)	Z,C	2
FMULSU	Rd, Rr	Fractional Multiply Signed with Unsigned	R1:R0 ← (Rd × Rr)<<1 (SU)	Z,C	2
Branch Instructions					
RJMP	k	Relative Jump	PC ← PC + k + 1	None	2
IJMP		Indirect Jump to (Z)	PC(15:0) ← Z	None	2
JMP	k	Jump	PC ← k	None	3
RCALL	k	Relative Call Subroutine	PC ← PC + k + 1	None	3
ICALL		Indirect Call to (Z)	PC(15:0) ← Z	None	3
CALL	k	Call Subroutine	PC ← k	None	4
RET		Subroutine Return	PC ← STACK	None	4
RETI		Interrupt Return	PC ← STACK	I	4
CPSE	Rd, Rr	Compare, Skip if Equal	if (Rd = Rr) PC ← PC + 2 or 3	None	1 / 2 / 3
CP	Rd, Rr	Compare	Rd - Rr	Z,C,N,V,S,H	1
CPC	Rd, Rr	Compare with Carry	Rd - Rr - C	Z,C,N,V,S,H	1
CPI	Rd, K	Compare with Immediate	Rd - K	Z,C,N,V,S,H	1
SBRC	Rr, b	Skip if Bit in Register Cleared	if (Rr(b) = 0) PC ← PC + 2 or 3	None	1 / 2 / 3
SBRS	Rr, b	Skip if Bit in Register Set	if (Rr(b) = 1) PC ← PC + 2 or 3	None	1 / 2 / 3
SBIC	A, b	Skip if Bit in I/O Register Cleared	if(I/O(A,b) = 0) PC ← PC + 2 or 3	None	1 / 2 / 3
SBIS	A, b	Skip if Bit in I/O Register Set	If(I/O(A,b) = 1) PC ← PC + 2 or 3	None	1 / 2 / 3
BRBS	s, k	Branch if Status Flag Set	if (SREG(s) = 1) then PC ←PC+k+1	None	1 / 2
BRBC	s, k	Branch if Status Flag Cleared	if (SREG(s) = 0) then PC ←PC+k+1	None	1 / 2
BREQ	k	Branch if Equal	if (Z = 1) then PC ← PC + k + 1	None	1 / 2
BRNE	k	Branch if Not Equal	if (Z = 0) then PC ← PC + k + 1	None	1 / 2
BRCS	k	Branch if Carry Set	if (C = 1) then PC ← PC + k + 1	None	1 / 2
BRCC	k	Branch if Carry Cleared	if (C = 0) then PC ← PC + k + 1	None	1 / 2

Instruction Set Summary (Continued)

Mnemonics	Operands	Description	Operation	Flags	#Clock
BRSH	k	Branch if Same or Higher	if (C = 0) then PC ← PC + k + 1	None	1 / 2
BRLO	k	Branch if Lower	if (C = 1) then PC ← PC + k + 1	None	1 / 2
BRMI	k	Branch if Minus	if (N = 1) then PC ← PC + k + 1	None	1 / 2
BRPL	k	Branch if Plus	if (N = 0) then PC ← PC + k + 1	None	1 / 2
BRGE	k	Branch if Greater or Equal, Signed	if (N ⊕ V= 0) then PC ← PC + k + 1	None	1 / 2
BRLT	k	Branch if Less Than, Signed	if (N ⊕ V= 1) then PC ← PC + k + 1	None	1 / 2
BRHS	k	Branch if Half-carry Flag Set	if (H = 1) then PC ← PC + k + 1	None	1 / 2
BRHC	k	Branch if Half-carry Flag Cleared	if (H = 0) then PC ← PC + k + 1	None	1 / 2
BRTS	k	Branch if T Flag Set	if (T = 1) then PC ← PC + k + 1	None	1 / 2
BRTC	k	Branch if T Flag Cleared	if (T = 0) then PC ← PC + k + 1	None	1 / 2
BRVS	k	Branch if Overflow Flag is Set	if (V = 1) then PC ← PC + k + 1	None	1 / 2
BRVC	k	Branch if Overflow Flag is Cleared	if (V = 0) then PC ← PC + k + 1	None	1 / 2
BRIE	k	Branch if Interrupt Enabled	if (I = 1) then PC ← PC + k + 1	None	1 / 2
BRID	k	Branch if Interrupt Disabled	if (I = 0) then PC ← PC + k + 1	None	1 / 2
Data Transfer Instructions					
MOV	Rd, Rr	Copy Register	Rd ← Rr	None	1
MOVW	Rd, Rr	Copy Register Pair	Rd+1:Rd ← Rr+1:Rr	None	1
LDI	Rd, K	Load Immediate	Rd ← K	None	1
LDS	Rd, k	Load Direct from Data Space	Rd ← (k)	None	2
LD	Rd, X	Load Indirect	Rd ← (X)	None	2
LD	Rd, X+	Load Indirect and Post-Increment	Rd ← (X), X ← X + 1	None	2
LD	Rd, -X	Load Indirect and Pre-Decrement	X ← X - 1, Rd ← (X)	None	2
LD	Rd, Y	Load Indirect	Rd ← (Y)	None	2
LD	Rd, Y+	Load Indirect and Post-Increment	Rd ← (Y), Y ← Y + 1	None	2
LD	Rd, -Y	Load Indirect and Pre-Decrement	Y ← Y - 1, Rd ← (Y)	None	2
LDD	Rd, Y+q	Load Indirect with Displacement	Rd ← (Y + q)	None	2
LD	Rd, Z	Load Indirect	Rd ← (Z)	None	2
LD	Rd, Z+	Load Indirect and Post-Increment	Rd ← (Z), Z ← Z+1	None	2
LD	Rd, -Z	Load Indirect and Pre-Decrement	Z ← Z - 1, Rd ← (Z)	None	2
LDD	Rd, Z+q	Load Indirect with Displacement	Rd ← (Z + q)	None	2
STS	k, Rr	Store Direct to Data Space	Rd ← (k)	None	2
ST	X, Rr	Store Indirect	(X) ← Rr	None	2
ST	X+, Rr	Store Indirect and Post-Increment	(X) ← Rr, X ← X + 1	None	2
ST	-X, Rr	Store Indirect and Pre-Decrement	X ← X - 1, (X) ← Rr	None	2
ST	Y, Rr	Store Indirect	(Y) ← Rr	None	2
ST	Y+, Rr	Store Indirect and Post-Increment	(Y) ← Rr, Y ← Y + 1	None	2

Instruction Set Summary (Continued)

Mnemonics	Operands	Description	Operation	Flags	#Clock
ST	-Y, Rr	Store Indirect and Pre-Decrement	Y ← Y - 1, (Y) ← Rr	None	2
STD	Y+q, Rr	Store Indirect with Displacement	(Y + q) ← Rr	None	2
ST	Z, Rr	Store Indirect	(Z) ← Rr	None	2
ST	Z+, Rr	Store Indirect and Post-Increment	(Z) ← Rr, Z ← Z + 1	None	2
ST	-Z, Rr	Store Indirect and Pre-Decrement	Z ← Z - 1, (Z) ← Rr	None	2
STD	Z+q, Rr	Store Indirect with Displacement	(Z + q) ← Rr	None	2
LPM		Load Program Memory	R0 ← (Z)	None	3
LPM	Rd, Z	Load Program Memory	Rd ← (Z)	None	3
LPM	Rd, Z+	Load Program Memory and Post-Increment	Rd ← (Z), Z ← Z + 1	None	3
IN	Rd, A	In From I/O Location	Rd ← I/O(A)	None	1
OUT	A, Rr	Out To I/O Location	I/O(A) ← Rr	None	1
PUSH	Rr	Push Register on Stack	STACK ← Rr	None	2
POP	Rd	Pop Register from Stack	Rd ← STACK	None	2
Bit and Bit-test Instructions					
LSL	Rd	Logical Shift Left	Rd(n+1)←Rd(n),Rd(0)←0,C←Rd(7)	Z,C,N,V,H	1
LSR	Rd	Logical Shift Right	Rd(n)←Rd(n+1),Rd(7)←0,C←Rd(0)	Z,C,N,V	1
ROL	Rd	Rotate Left Through Carry	Rd(0)←C,Rd(n+1)←Rd(n),C←Rd(7)	Z,C,N,V,H	1
ROR	Rd	Rotate Right Through Carry	Rd(7)←C,Rd(n)←Rd(n+1),C←Rd(0)	Z,C,N,V	1
ASR	Rd	Arithmetic Shift Right	Rd(n) ← Rd(n+1), n=0..6	Z,C,N,V	1
SWAP	Rd	Swap Nibbles	Rd(3..0) ↔ Rd(7..4)	None	1
BSET	s	Flag Set	SREG(s) ← 1	SREG(s)	1
BCLR	s	Flag Clear	SREG(s) ← 0	SREG(s)	1
SBI	A, b	Set Bit in I/O Register	I/O(A, b) ← 1	None	2
CBI	A, b	Clear Bit in I/O Register	I/O(A, b) ← 0	None	2
BST	Rr, b	Bit Store from Register to T	T ← Rr(b)	T	1
BLD	Rd, b	Bit load from T to Register	Rd(b) ← T	None	1
SEC		Set Carry	C ← 1	C	1
CLC		Clear Carry	C ← 0	C	1
SEN		Set Negative Flag	N ← 1	N	1
CLN		Clear Negative Flag	N ← 0	N	1
SEZ		Set Zero Flag	Z ← 1	Z	1
CLZ		Clear Zero Flag	Z ← 0	Z	1
SEI		Global Interrupt Enable	I ← 1	I	1
CLI		Global Interrupt Disable	I ← 0	I	1
SES		Set Signed Test Flag	S ← 1	S	1

Instruction Set Summary (Continued)

Mnemonics	Operands	Description	Operation	Flags	#Clock
CLS		Clear Signed Test Flag	S ← 0	S	1
SEV		Set Two's Complement Overflow	V ← 1	V	1
CLV		Clear Two's Complement Overflow	V ← 0	V	1
SET		Set T in SREG	T ← 1	T	1
CLT		Clear T in SREG	T ← 0	T	1
SEH		Set Half-carry Flag in SREG	H ← 1	H	1
CLH		Clear Half-carry Flag in SREG	H ← 0	H	1
NOP		No Operation		None	1
SLEEP		Sleep	(See specific description for Sleep)	None	1
WDR		Watchdog Reset	(See specific description for WDR)	None	1
BREAK		Break	For on-chip debug only	None	N/A

Pin Descriptions

V_{CC} Supply voltage

GND Ground

PortD (PD7..PD0) Port D is an 8-bit bi-directional I/O port with internal programmable pull-up resistors. The Port D output buffers can be programmed to sink/source either 6 or 20 mA (SCR54 – see "System Control Register – FPGA/AVR" on page 30). As inputs, Port D pins that are externally pulled Low will source current if the programmable pull-up resistors are activated.

The Port D pins are input with pull-up when a reset condition becomes active, even if the clock is not running. On lower pin count packages Port D may not be available. Check the Pin List for details.

PortE (PE7..PE0) Port E is an 8-bit bi-directional I/O port with internal programmable pull-up resistors. The Port E output buffers can be programmed to sink/source either 6 or 20 mA (SCR55 – see "System Control Register – FPGA/AVR" on page 30). As inputs, Port E pins that are externally pulled Low will source current if the pull-up resistors are activated.

Port E also serves the functions of various special features. See Table 47 on page 149.

The Port E pins are input with pull-up when a reset condition becomes active, even if the clock is not running

RX0 Input (receive) to UART(0) – See SCR52

TX0 Output (transmit) from UART(0) – See SCR52

RX1 Input (receive) to UART(1) – See SCR53

TX1 Output (transmit) from UART(1) – See SCR53

XTAL1 Input to the inverting oscillator amplifier and input to the internal clock operating circuit.

XTAL2 Output from the inverting oscillator amplifier

TOSC1 Input to the inverting timer/counter oscillator amplifier

TOSC2 Output from the inverting timer/counter oscillator amplifier

SCL 2-wire serial input/output clock

SDA 2-wire serial input/output data

Clock Options

Crystal Oscillator XTAL1 and XTAL2 are input and output, respectively, of an inverting amplifier, which can be configured for use as an on-chip oscillator, as shown in Figure 24. Either a quartz crystal or a ceramic resonator may be used.

Figure 24. Oscillator Connections

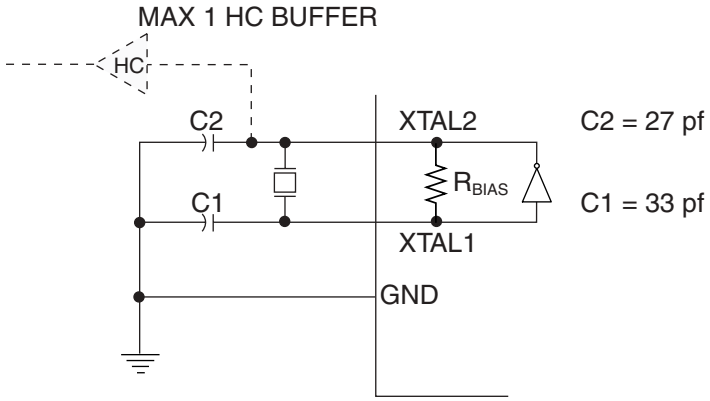

External Clock To drive the device from an external clock source, XTAL2 should be left unconnected while XTAL1 is driven as shown in Figure 25.

Figure 25. External Clock Drive Configuration

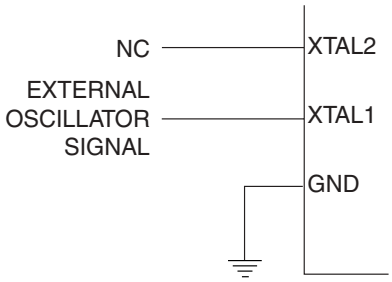

No Clock/Oscillator Source

When not in use, for low static IDD, add a pull-down resistor to XTAL1.

Figure 26. No Clock/Oscillator Connections

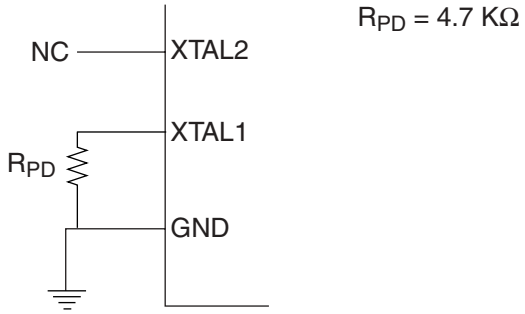

Timer Oscillator

For the timer oscillator pins, TOSC1 and TOSC2, the crystal is connected directly between the pins. The oscillator is optimized for use with a 32.768 kHz watch crystal. An external clock signal applied to this pin goes through the same amplifier having a bandwidth of 1 MHz. The external clock signal should therefore be in the range
0 Hz – 1 MHz.

Figure 27. Time Oscillator Connections

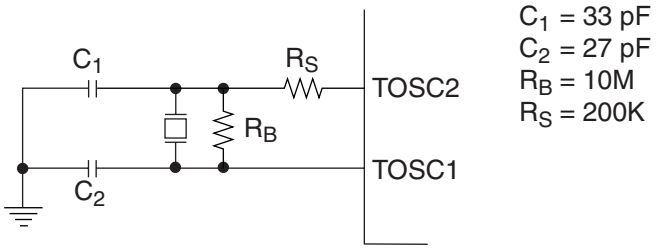

Architectural Overview

The AVR uses a Harvard architecture concept – with separate memories and buses for program and data. The program memory is accessed with a single level pipeline. While one instruction is being executed, the next instruction is pre-fetched from the program memory. This concept enables instructions to be executed in every clock-cycle. The program memory is in-system programmable SRAM memory. With a few exceptions, AVR instructions have a single 16-bit word format, meaning that every program memory address contains a single 16-bit instruction.

During interrupts and subroutine calls, the return address program counter (PC) is stored on the stack. The stack is effectively allocated in the general data SRAM, as a consequence, the stack size is only limited by the total SRAM size and the usage of the SRAM. All user programs must initialize the Stack Pointer (SP) in the reset routine (before subroutines or interrupts are executed). The 16-bit stack pointer is read/write accessible in the I/O space.

The data SRAM can be easily accessed through the five different addressing modes supported in the AVR architecture.

A flexible interrupt module has its control registers in the I/O space with an additional global interrupt enable bit in the status register. All the different interrupts have a separate interrupt vector in the interrupt vector table at the beginning of the program memory. The different interrupts have priority in accordance with their interrupt vector position. The lower the interrupt vector address, the higher the priority.

The memory spaces in the AVR architecture are all linear and regular memory maps.

General-purpose Register File

Figure 28 shows the structure of the 32 x 8 general-purpose working registers in the CPU.

Figure 28. AVR CPU General-purpose Working Registers

	7 … 0	Addr.	
General-purpose Working Registers	R0	$00	
	R1	$01	
	R2	$02	
	. . .		
	R13	$0D	
	R14	$0E	
	R15	$0F	
	R16	$10	
	R17	$11	
	. . .		
	R26	$1A	AVR X-register Low Byte
	R27	$1B	AVR X-register High Byte
	R28	$1C	AVR Y-register Low Byte
	R29	$1D	AVR Y-register High Byte
	R30	$1E	AVR Z-register Low Byte
	R31	$1F	AVR Z-register High Byte

All the register operating instructions in the instruction set have direct- and single-cycle access to all registers. The only exception is the five constant arithmetic and logic instructions SBCI, SUBI, CPI, ANDI and ORI between a constant and a register and the LDI instruction for load-immediate constant data. These instructions apply to the second half of the registers in the register file – R16..R31. The general SBC, SUB, CP, AND and OR and all other operations between two registers or on a single-register apply to the entire register file.

As shown in Figure 28 each register is also assigned a data memory address, mapping the registers directly into the first 32 locations of the user Data Space. Although not being physically implemented as SRAM locations, this memory organization provides great flexibility in access of the registers, as the X, Y and Z registers can be set to index any register in the file.

The 4 to 16 Kbytes of data SRAM, as configured during FPSLIC download, are available for general data are implemented starting at address $0060 as follows:

4 Kbytes	$0060 : $0FFF
8 Kbytes	$0060 : $1FFF
12 Kbytes	$0060 : $2FFF
16 Kbytes	$0060 : $3FFF

Addresses beyond the maximum amount of data SRAM are unavailable for write or read and will return unknown data if accessed. Ghost memory is not implemented.

X-register, Y-register and Z-register

Registers R26..R31 have some added functions to their general-purpose usage. These registers are address pointers for indirect addressing of the SRAM. The three indirect address registers X, Y and Z have functions as fixed displacement, automatic increment and decrement (see the descriptions for the different instructions).

ALU – Arithmetic Logic Unit

The high-performance AVR ALU operates in direct connection with all the 32 general-purpose working registers. Within a single clock cycle, ALU operations between registers in the register file are executed. The ALU operations are divided into three main categories – arithmetic, logical and bit-functions.

Multiplier Unit

The high-performance AVR Multiplier operates in direct connection with all the 32 general-purpose working registers. This unit performs 8 x 8 multipliers every two clock cycles. See multiplier details on page 106.

SRAM Data Memory

External data SRAM (or program) cannot be used with the FPSLIC AT94K family.

The five different addressing modes for the data memory cover: Direct, Indirect with Displacement, Indirect, Indirect with Pre-decrement and Indirect with Post-increment. In the register file, registers R26 to R31 feature the indirect addressing pointer registers.

The Indirect with Displacement mode features a 63 address locations reach from the base address given by the Y- or Z-register.

When using register indirect addressing modes with automatic Pre-decrement and Post-increment, the address registers X, Y and Z are decremented and incremented.

The entire data address space including the 32 general-purpose working registers and the 64 I/O registers are all accessible through all these addressing modes. See the next section for a detailed description of the different addressing modes.

Program and Data Addressing Modes

The embedded AVR core supports powerful and efficient addressing modes for access to the program memory (SRAM) and data memory (SRAM, Register File and I/O Memory). This section describes the different addressing modes supported by the AVR architecture.

Register Direct, Single-register Rd

The operand is contained in register d (Rd).

Register Direct, Two Registers Rd and Rr

Operands are contained in register r (Rr) and d (Rd). The result is stored in register d (Rd).

I/O Direct

Operand address is contained in 6 bits of the instruction word. *n* is the destination or source register address.

Data Direct

A 16-bit data address is contained in the 16 LSBs of a two-word instruction. Rd/Rr specify the destination or source register.

Data Indirect with Displacement

Operand address is the result of the Y- or Z-register contents added to the address contained in 6 bits of the instruction word.

Data Indirect

Operand address is the contents of the X-, Y- or the Z-register.

Data Indirect with Pre-decrement

The X-, Y- or the Z-register is decremented before the operation. Operand address is the decremented contents of the X, Y or the Z-register.

Data Indirect with Post-increment

The X-, Y- or the Z-register is incremented after the operation. The operand address is the content of the X-, Y- or the Z-register prior to incrementing.

Direct Program Address, JMP and CALL

Program execution continues at the address immediate in the instruction words.

Indirect Program Addressing, IJMP and ICALL

Program execution continues at address contained by the Z-register (i.e., the PC is loaded with the contents of the Z-register).

Relative Program Addressing, RJMP and RCALL

Program execution continues at address PC + k + 1. The relative address k is -2048 to 2047.

Memory Access Times and Instruction Execution Timing

This section describes the general access timing concepts for instruction execution and internal memory access.

The AVR CPU is driven by the XTAL1 input directly generated from the external clock crystal for the chip. No internal clock division is used.

Figure 29 shows the parallel instruction fetches and instruction executions enabled by the Harvard architecture and the fast-access register file concept. This is the basic pipelining concept to obtain up to 1 MIPS per MHz with the corresponding unique results for functions per cost, functions per clocks and functions per power-unit.

Figure 29. The Parallel Instruction Fetches and Instruction Executions

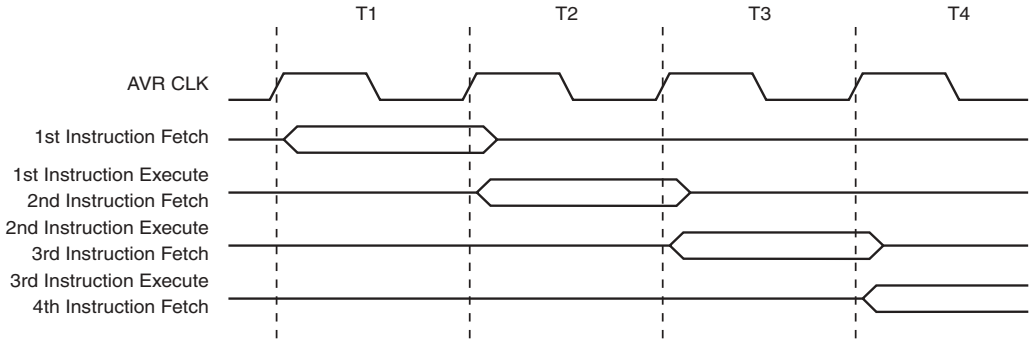

Figure 30 shows the internal timing concept for the register file. In a single clock cycle an ALU operation using two register operands is executed, and the result is stored back to the destination register.

Figure 30. Single Cycle ALU Operation

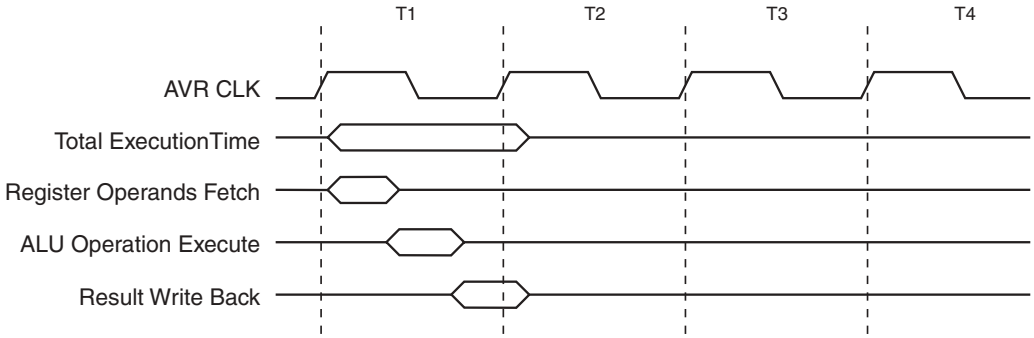

The internal data SRAM access is performed in two system clock cycles as described in Figure 31.

Figure 31. On-chip Data SRAM Access Cycles

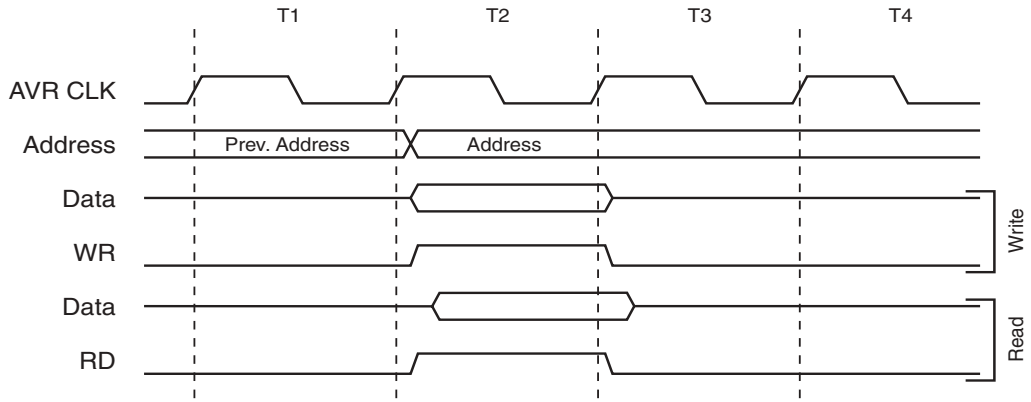

Memory-mapped I/O

The I/O space definition of the embedded AVR core is shown in the following table:

AT94K Register Summary

Address	Name	Bit 7	Bit 6	Bit 5	Bit 4	Bit 3	Bit 2	Bit 1	Bit 0	Reference Page
$3F ($5F)	SREG	I	T	H	S	V	N	Z	C	51
$3E ($5E)	SPH	SP15	SP14	SP13	SP12	SP11	SP10	SP9	SP8	57
$3D ($5D)	SPL	SP7	SP6	SP5	SP4	SP3	SP2	SP1	SP0	51
$3C ($5C)	Reserved									
$3B ($5B)	EIMF	INTF3	INTF2	INTF1	INTF0	INT3	INT2	INT1	INT0	62
$3A ($5A)	SFTCR					FMXOR	WDTS	DBG	SRST	51
$39 ($59)	TIMSK	TOIE1	OCIE1A	OCIE1B	TOIE2	TICIE1	OCIE2	TOIE0	OCIE0	62
$38 ($58)	TIFR	TOV1	OCF1A	OCF1B	TOV2	ICF1	OCF2	TOV0	OCF0	63
$37 ($57)	Reserved									
$36 ($56)	TWCR	TWINT	TWEA	TWSTA	TWSTO	TWWC	TWEN		TWIE	110
$35 ($55)	MCUR	JTRF	JTD	SE	SM1	SM0	PORF	WDRF	EXTRF	51
$34 ($54)	Reserved									
$33 ($53)	TCCR0	FOC0	PWM0	COM01	COM00	CTC0	CS02	CS01	CS00	69
$32 ($52)	TCNT0	Timer/Counter0 (8-bit)								70
$31 ($51)	OCR0	Timer/Counter0 Output Compare Register								71
$30 ($50)	SFIOR							PSR2	PSR10	66
$2F ($4F)	TCCR1A	COM1A1	COM1A0	COM1B1	COM1B0	FOC1A	FOC1B	PWM11	PWM10	76
$2E ($4E)	TCCR1B	ICNC1	ICES1	ICPE		CTC1	CS12	CS11	CS10	77
$2D ($4D)	TCNT1H	Timer/Counter1 - Counter Register High Byte								78
$2C ($4C)	TCNT1L	Timer/Counter1 - Counter Register Low Byte								78
$2B ($4B)	OCR1AH	Timer/Counter1 - Output Compare Register A High Byte								79
$2A ($4A)	OCR1AL	Timer/Counter1 - Output Compare Register A Low Byte								79
$29 ($49)	OCR1BH	Timer/Counter1 - Output Compare Register B High Byte								79
$28 ($48)	OCR1BL	Timer/Counter1 - Output Compare Register B Low Byte								79
$27 ($47)	TCCR2	FOC2	PWM2	COM21	COM20	CTC2	CS22	CS21	CS20	69
$26 ($46)	ASSR					AS2	TCN20B	OCR2UB	TCR2UB	73
$25 ($45)	ICR1H	Timer/Counter1 - Input Capture Register High Byte								80
$24 ($44)	ICR1L	Timer/Counter1 - Input Capture Register Low Byte								80
$23 ($43)	TCNT2	Timer/Counter2 (8-bit)								70
$22 ($42)	OCR2	Timer/Counter 2 Output Compare Register								71
$21 ($41)	WDTCR				WDTOE	WDE	WDP2	WDP1	WDP0	83
$20 ($40)	UBRRHI	UART1 Baud Rate High Nibble [11..8]				UART0 Baud Rate Low Nibble [11..8]				105
$1F ($3F)	TWDR	2-wire Serial Data Register								111
$1E ($3E)	TWAR	2-wire Serial Address Register								112
$1D ($3D)	TWSR	2-wire Serial Status Register								112
$1C ($3C)	TWBR	2-wire Serial Bit Rate Register								109
$1B ($3B)	FPGAD	FPGA Cache Data Register (D7 - D0)								52
$1A ($3A)	FPGAZ	FPGA Cache Z Address Register (T3 - T0) (Z3 - Z0)								53
$19 ($39)	FPGAY	FPGA Cache Y Address Register (Y7 - Y0)								53
$18 ($38)	FPGAX	FPGA Cache X Address Register (X7 - X0)								53
$17 ($37)	FISUD	FPGA I/O Select, Interrupt Mask/Flag Register D (Reserved on AT94K05)								54, 56

AT94K Register Summary (Continued)

Address	Name	Bit 7	Bit 6	Bit 5	Bit 4	Bit 3	Bit 2	Bit 1	Bit 0	Reference Page
$16 ($36)	FISUC	FPGA I/O Select, Interrupt Mask/Flag Register C (Reserved on AT94K05)								54, 56
$15 ($35)	FISUB	FPGA I/O Select, Interrupt Mask/Flag Register B								54, 56
$14 ($34)	FISUA	FPGA I/O Select, Interrupt Mask/Flag Register A								54, 56
$13 ($33)	FISCR	FIADR						XFIS1	XFIS0	53
$12 ($32)	PORTD	PORTD7	PORTD6	PORTD5	PORTD4	PORTD3	PORTD2	PORTD1	PORTD0	124
$11 ($31)	DDRD	DDRD7	DDRD6	DDRD5	DDRD4	DDRD3	DDRD2	DDRD1	DDRD0	124
$10 ($30)	PIND	PIND7	PIND6	PIND5	PIND4	PIND3	PIND2	PIND1	PIND0	124
$0F ($2F)	Reserved									
$0E ($2E)	Reserved									
$0D ($2D)	Reserved									
$0C ($2C)	UDR0	UART0 I/O Data Register								101
$0B ($2B)	UCSR0A	RXC0	TXC0	UDRE0	FE0	OR0		U2X0	MPCM0	101
$0A ($2A)	UCSR0B	RXCIE0	TXCIE0	UDRIE0	RXEN0	TXEN0	CHR90	RXB80	TXB80	103
$09 ($29)	UBRR0	UART0 Baud-rate Register								105
$08 ($28)	OCDR (Reserved)	IDRD								Reserved[1]
$07 ($27)	PORTE	PORTE7	PORTE6	PORTE5	PORTE4	PORTE3	PORTE2	PORTE1	PORTE0	126
$06 ($26)	DDRE	DDRE7	DDRE6	DDRE5	DDRE4	DDRE3	DDRE2	DDRE1	DDRE0	126
$05 ($25)	PINE	PINE7	PINE6	PINE5	PINE4	PINE3	PINE2	PINE1	PINE0	126
$04 ($24)	Reserved									
$03 ($23)	UDR1	UART1 I/O Data Register								101
$02 ($22)	UCSR1A	RXC1	TXC1	UDRE1	FE1	OR1		U2X1	MPCM1	101
$01 ($21)	UCSR1B	RXCIE1	TXCIE1	UDRIE1	RXEN1	TXEN1	CHR91	RXB81	TXB81	103
$00 ($20)	UBRR1	UART1 Baud-rate Register								105

Note: 1. The On-chip Debug Register (OCDR) is detailed on the “FPSLIC On-chip Debug System” distributed within Atmel and select third-party vendors only under Non-Disclosure Agreement (NDA). Contact fpslic@atmel.com for a copy of this document.

The embedded AVR core I/Os and peripherals, and all the virtual FPGA peripherals are placed in the I/O space. The different I/O locations are directly accessed by the IN and OUT instructions transferring data between the 32 x 8 general-purpose working registers and the I/O space. I/O registers within the address range $00 – $1F are directly bit-accessible using the SBI and CBI instructions. In these registers, the value of single bits can be checked by using the SBIS and SBIC instructions. When using the I/O specific instructions IN, OUT, the I/O register address $00 – $3F are used, see Figure 32. When addressing I/O registers as SRAM, $20 must be added to this address. All I/O register addresses throughout this document are shown with the SRAM address in parentheses.

Figure 32. Memory-mapped I/O

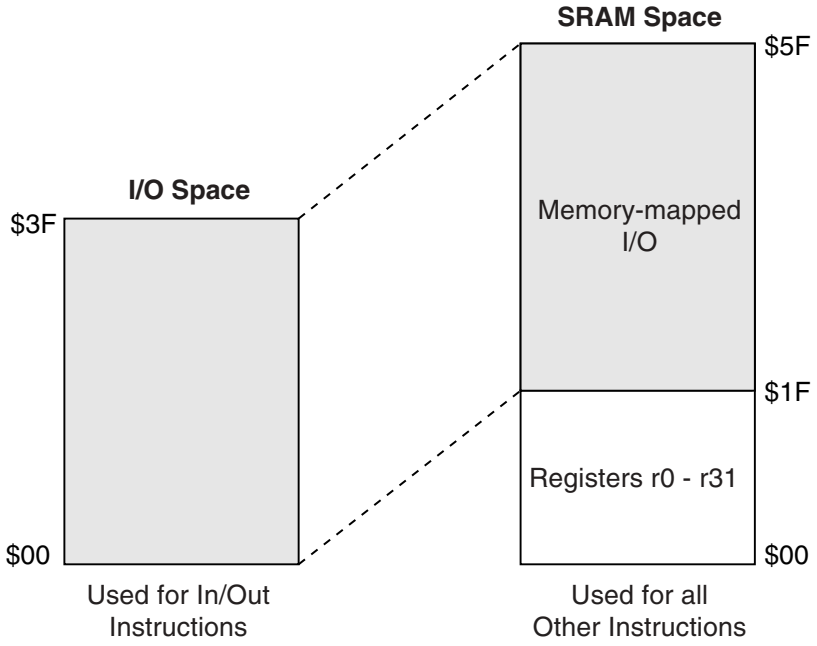

For single-cycle access (In/Out Commands) to I/O, the instruction has to be less than 16 bits:

opcode	register	address
	r0 - 31 ($1F)	r0 - 63 ($3F)
5 bits	5 bits	6 bits

In the data SRAM, the registers are located at memory addresses $00 - $1F and the I/O space is located at memory addresses $20 - $5F.

As there are only 6 bits available to refer to the I/O space, the address is shifted down 2 bits. This means the In/Out commands access $00 to $3F which goes directly to the I/O and maps to $20 to $5F in SRAM. All other instructions access the I/O space through the $20 - $5F addressing.

For compatibility with future devices, reserved bits should be written zero if accessed. Reserved I/O memory addresses should never be written.

The status flags are cleared by writing a logic 1 to them. Note that the CBI and SBI instructions will operate on all bits in the I/O register, writing a one back into any flag read as set, thus clearing the flag. The CBI and SBI instructions work with registers $00 to $1F only.

Status Register – SREG

The AVR status register[1] – SREG – at I/O space location $3F ($5F) is defined as:

Bit	7	6	5	4	3	2	1	0	
$3F ($5F)	**I**	**T**	**H**	**S**	**V**	**N**	**Z**	**C**	**SREG**
Read/Write	R/W	R/W	R/W	R/W	R/W	R/W	R/W	R/W	
Initial Value	0	0	0	0	0	0	0	0	

Note: 1. Note that the status register is not automatically stored when entering an interrupt routine and restored when returning from an interrupt routine. This must be handled by software.

- **Bit 7 - I: Global Interrupt Enable**

The global interrupt enable bit must be set (one) for the interrupts to be enabled. The individual interrupt enable control is then performed in separate control registers. If the global interrupt enable register is cleared (zero), none of the interrupts are enabled independent of the individual interrupt enable settings. The I-bit is cleared by the hardware after an interrupt has occurred, and is set by the RETI instruction to enable subsequent interrupts.

- **Bit 6 - T: Bit Copy Storage**

The bit copy instructions BLD (Bit LoaD) and BST (Bit STore) use the T-bit as source and destination for the operated bit. A bit from a register in the register file can be copied into T by the BST instruction, and a bit in T can be copied into a bit in a register in the register file by the BLD instruction.

- **Bit 5 - H: Half-carry Flag**

The half-carry flag H indicates a half-carry in some arithmetic operations.

- **Bit 4 - S: Sign Bit, $S = N \oplus V$**

The S-bit is always an exclusive or between the negative flag N and the two's complement overflow flag V.

- **Bit 3 - V: Two's Complement Overflow Flag**

The two's complement overflow flag V supports two's complement arithmetics.

- **Bit 2 - N: Negative Flag**

The negative flag N indicates a negative result from an arithmetical or logical operation.

- **Bit 1 - Z: Zero Flag**

The zero flag Z indicates a zero result from an arithmetical or logical operation.

- **Bit 0 - C: Carry Flag**

The carry flag C indicates a carry in an arithmetical or logical operation.

Stack Pointer – SP

The general AVR 16-bit Stack Pointer is effectively built up of two 8-bit registers in the I/O space locations $3E ($5E) and $3D ($5D). Future versions of FPSLIC may support up to 64K Bytes of memory; therefore, all 16 bits are used.

Bit	15	14	13	12	11	10	9	8	
$3E ($5E)	**SP15**	**SP14**	**SP13**	**SP12**	**SP11**	**SP10**	**SP9**	**SP8**	**SPH**
$3D ($5D)	**SP7**	**SP6**	**SP5**	**SP4**	**SP3**	**SP2**	**SP1**	**SP0**	**SPL**
	7	6	5	4	3	2	1	0	
Read/Write	R/W	R/W	R/W	R/W	R/W	R/W	R/W	R/W	
	R/W	R/W	R/W	R/W	R/W	R/W	R/W	R/W	
Initial Value	0	0	0	0	0	0	0	0	
	0	0	0	0	0	0	0	0	

The Stack Pointer points to the data SRAM stack area where the Subroutine and Interrupt Stacks are located. This Stack space in the data SRAM must be defined by the program before any subroutine calls are executed or interrupts are enabled. The stack pointer must be set to point above $60. The Stack Pointer is decremented by one when data is pushed onto the Stack with the PUSH instruction, and it is decremented by two when an address is pushed onto the Stack with subroutine calls and interrupts. The Stack Pointer is incremented by one when data is popped from the Stack with the POP instruction, and it is incremented by two when an address is popped from the Stack with return from subroutine RET or return from interrupt RETI.

Software Control of System Configuration

The software control register will allow the software to manage select system level configuration bits.

Software Control Register – SFTCR

Bit	7	6	5	4	3	2	1	0	
$3A ($5A)	-	-	-	-	FMXOR	WDTS	DBG	SRST	SFTCR
Read/Write	R	R	R	R	R/W	R/W	R/W	R/W	
Initial Value	0	0	0	0	0	0	0	0	

- **Bits 7..4 - Res: Reserved Bits**

These bits are reserved in the AT94K and always read as zero.

- **Bit 3 - FMXOR: Frame Mode XOR (Enable/Disable)**

This bit is XORed with the System Control Register's Enable Frame Interface bit. The behavior when this bit is set to 1 is dependent on how the SCR was initialized. If the Enable Frame Interface bit in the SCR is 0, the FMXOR bit enables the Frame Interface when set to 1. If the Enable Frame Interface bit in the SCR is 1, the FMXOR bit disables the Frame Interface when set to 1. During AVR reset, the FMXOR bit is cleared by the hardware.

- **Bit 2 - WDTS: Software Watchdog Test Clock Select**

When this bit is set to 1, the test clock signal is selected to replace the AVR internal oscillator into the associated watchdog timer logic. During AVR reset, the WDTS bit is cleared by the hardware.

- **Bit 1 - DBG: Debug Mode**

When this bit is set to 1, the AVR can write its own program SRAM. During AVR reset, the DBG bit is cleared by the hardware.

- **Bit 0 - SRST: Software Reset**

When this bit is set (one), a reset request is sent to the system configuration external to the AVR. Appropriate reset signals are generated back into the AVR and configuration download is initiated. A software reset will cause the EXTRF bit in the MCUR register to be set (one), which remains set throughout the AVR reset and may be read by the restarted program upon reset complete. The external reset flag is set (one) since the requested reset is issued from the system configuration external to the AVR core. During AVR reset, the SRST bit is cleared by the hardware.

MCU Control Status/Register – MCUR

The MCU Register contains control bits for general MCU functions and status bits to indicate the source of an MCU reset.

Bit	7	6	5	4	3	2	1	0	
$35 ($55)	**JTRF**	**JTD**	**SE**	**SM1**	**SM0**	**PORF**	**WDRF**	**EXTRF**	**MCUR**
Read/Write	R/W	R/W	R/W	R/W	R/W	R/W	R/W	R/W	
Initial Value	0	0	0	0	0	1	0	1	

- **Bit 7 - JTRF: JTAG Reset Flag**

This flag is set (one) upon issuing the AVR_RESET ($C) JTAG instruction. The flag can only be cleared (zero) by writing a zero to the JTRF bit or by a power-on reset. The bit will not be cleared by hardware during AVR reset.

- **Bit 6 - JTD: JTAG Disable**

When this bit is cleared (zero), and the System Control Register JTAG Enable bit is set (one), the JTAG interface is disabled. To avoid unintentional disabling or enabling of the JTAG interface, a timed sequence must be followed when changing this bit: the application software must write this bit to the desired value twice within four cycles to change its value.

- **Bit 5 - SE: Sleep Enable**

The SE bit must be set (one) to make the MCU enter the Sleep mode when the SLEEP instruction is executed. To avoid the MCU entering the Sleep mode unless it is the programmers purpose, it is recommended to set the Sleep Enable SE bit just before the execution of the SLEEP instruction.

- **Bits 4, 3 - SM1/SM0: Sleep Mode Select Bits 1 and 0**

This bit selects between the three available Sleep modes as shown in Table 12.

- **Bit 2 - PORF: Power-on Reset Flag**

This flag is set (one) upon power-up of the device. The flag can only be cleared (zero) by writing a zero to the PORF bit. The bit will not be cleared by the hardware during AVR reset.

- **Bit 1 - WDRF: Watchdog Reset Flag**

This bit is set if a watchdog reset occurs. The bit is cleared by writing a logic 0 to the flag.

- **Bit 0 - EXTRF: External (Software) Reset Flag**

This flag is set (one) in three separate circumstances: power-on reset, use of Resetn/AVRResetn and writing a one to the SRST bit in the Software Control Register – SFTCR. The PORF flag can be checked to eliminate power-on reset as a cause for this flag to be set. There is no way to differentiate between use of Resetn/AVRResetn and software reset. The flag can only be cleared (zero) by writing a zero to the EXTRF bit. The bit will not be cleared by the hardware during AVR reset.

Table 12. Sleep Mode Select

SM1	SM0	Sleep Mode
0	0	Idle
0	1	Reserved
1	0	Power-down
1	1	Power-save

FPGA Cache Logic

FPGA Cache Data Register – FPGAD

Bit	7	6	5	4	3	2	1	0	
$1B ($3B)	**MSB**							**LSB**	**FPGAD**
Read/Write	W	W	W	W	W	W	W	W	
Initial Value	N/A	N/A	N/A	N/A	N/A	N/A	N/A	N/A	

The FPGAD I/O Register address is *not* supported by a physical register; it is simply the I/O address that, if written to, generates the FPGA Cache I/O write strobe. The CACHEIOWE signal is a qualified version of the AVR IOWE signal. It will only be active if an OUT or ST (store to) instruction references the FPGAD I/O address. The FPGAD I/O address is write-sensitive-only; an I/O read to this location is ignored. If the AVR Cache Interface bit in the SCR [BIT62] is set (one), the data being “written” to this address is cached to the FPGA address specified by the FPGAX..Z registers (see below) during the active CACHEIOWE strobe.

FPGA Cache Z Address Registers – FPGAX..Z

Bit	7	6	5	4	3	2	1	0	
$18 ($38)	**FCX7**	**FCX6**	**FCX5**	**FCX4**	**FCX3**	**FCX2**	**FCX1**	**FCX0**	**FPGAX**
$19 ($39)	**FCY7**	**FCY6**	**FCY5**	**FCY4**	**FCY3**	**FCY2**	**FCY1**	**FCY0**	**FPGAY**
$1A ($3A)	**FCT3**	**FCT2**	**FCT1**	**FCT0**	**FCZ3**	**FCZ2**	**FCZ1**	**FCZ0**	**FPGAZ**
Read/Write	R/W	R/W	R/W	R/W	R/W	R/W	R/W	R/W	
Initial Value	0	0	0	0	0	0	0	0	

The three FPGA Cache address registers combine to form the 24-bit address, CACHEADDR[23:0], delivered to the FPGA cache logic outside the AVR block during a write to the FPGAD I/O Register (see above).

FPGA I/O Selection by AVR

Sixteen select signals are sent to the FPGA for I/O addressing. These signals are decoded from four I/O registry addresses (FISUA...D) and extended to sixteen with two bits from the FPGA I/O Select Control Register (FISCR). In addition, the FPGAIORE and FPGAIOWE signals are qualified versions of the IORE and IOWE signals. Each will only be active if one of the four base I/O addresses are referenced. It is necessary for the FPGA design to implement any required registers for each select line; each qualified with either the FPGAIORE or FPGAIOWE strobe. Refer to the FPGA/AVR Interface section for more details**.** Only the FISCR registers physically exist. The FISUA...D I/O addresses for the purpose of FPGA I/O selection are NOT supported by AVR Core I/O space registers; they are simply I/O addresses (available to 1 cycle IN/OUT instructions) which trigger appropriate enabling of the FPGA select lines and the FPGA IORE/IOWE strobes (see Figure 18 on page 21).

FPGA I/O Select Control Register – FISCR

Bit	7	6	5	4	3	2	1	0	
$13 ($33)	**FIADR**	**-**	**-**	**-**	**-**	**-**	**XFIS1**	**XFIS0**	**FISCR**
Read/Write	R/W	R	R	R	R	R	R/W	R/W	
Initial Value	0	0	0	0	0	0	0	0	

- **Bit 7 - FIADR: FPGA Interrupt Addressing Enable**

When FIADR is set (one), the four dual-purpose I/O addresses, FISUA..D, are mapped to four physical registers that provide memory space for FPGA interrupt masking and interrupt flag status. When FIADR is cleared (zero), and I/O read or write to one of the four dual-purpose I/O addresses, FISUA..D, will access its associated group of four FPGA I/O select lines. The XFIS1 and XFIS0 bits (see Table 13) further determine which one select line in the accessed group is set (one). A read will assign the FPGA I/O read enable to the AVR I/O read enable (FPGAIORE ← IORE) and a write, the FPGA I/O write enable to the AVR I/O write enable

(FPGAIOWE ← IOWE). FPGA macros utilizing one or more FPGA I/O select lines must use the FPGA I/O read/write enables, FPGAIORE or FPGAIOWE, to qualify each select line. The FIADR bit will be cleared (zero) during AVR reset.

- **Bits 6..2 - Res: Reserved Bits**

These bits are reserved and always read as zero.

- **Bits 1, 0 - XFIS1, 0: Extended FPGA I/O Select Bits 1, 0**

XFIS[1:0] determines which one of the four FPGA I/O select lines will be set (one) within the accessed group. An I/O read or write to one of the four dual-purpose I/O addresses, FISUA..D, will access one of four groups. Table 13 details the FPGA I/O selection scheme.

Table 13. FPGA I/O Select Line Scheme

Read or Write I/O Address	FISCR Register		FPGA I/O Select Lines			
	XFIS1	XFIS0	15..12	11..8	7..4	3..0
FISUA $14 ($34)	0	0	0000	0000	0000	0001
	0	1	0000	0000	0000	0010
	1	0	0000	0000	0000	0100
	1	1	0000	0000	0000	1000
FISUB $15 ($35)	0	0	0000	0000	0001	0000
	0	1	0000	0000	0010	0000
	1	0	0000	0000	0100	0000
	1	1	0000	0000	1000	0000
FISUC $16 ($36)(1)	0	0	0000	0001	0000	0000
	0	1	0000	0010	0000	0000
	1	0	0000	0100	0000	0000
	1	1	0000	1000	0000	0000
FISUD $17 ($37)(1)	0	0	0001	0000	0000	0000
	0	1	0010	0000	0000	0000
	1	0	0100	0000	0000	0000
	1	1	1000	0000	0000	0000

Note: 1. Not available on AT94K05.

In summary, 16 select signals are sent to the FPGA for I/O addressing. These signals are decoded from four base I/O Register addresses (FISUA..D) and extended to 16 with two bits from the FPGA I/O Select Control Register, XFIS1 and XFIS0. The FPGA I/O read and write signals, FPGAIORE and FPGAIOWE, are qualified versions of the AVR IORE and IOWE signals. Each will only be active if one of the four base I/O addresses is accessed.

Reset: all select lines become active and an FPGAIOWE strobe is enabled. This is to allow the FPGA design to load zeros (8'h00) from the D-bus into appropriate registers.

General AVR/FPGA I/O Select Procedure

I/O select depends on the FISCR register setup and the FISUA..D register written to or read from.

The following FISCR setups and writing data to the FISUA..D registers will result in the shown I/O select lines and data presented on the 8-bit AVR–FPGA data bus.

Table 14. FISCR Register Setups and I/O Select Lines.

FISCR Register				I/O Select Lines[1]			
FIADR(b7)	b6-2	XFIS1(b1)	XFIS0(b0)	FISUA	FISUB	FISUC	FISUD
0	-	0	0	IOSEL 0	IOSEL 4	IOSEL 8	IOSEL 12
0	-	0	1	IOSEL 1	IOSEL 5	IOSEL 9	IOSEL 13
0	-	1	0	IOSEL 2	IOSEL 6	IOSEL 10	IOSEL 14
0	-	1	1	IOSEL 3	IOSEL 7	IOSEL 11	IOSEL 15

Note: 1. IOSEL 15..8 are not available on AT94K05.

```
;---------------------------------------------
io_select0_write:
  ldi r16,0x00         ;FIADR=0,XFIS1=0,XFIS0=0 ->I/O select line=0
  out FISCR,r16        ;load I/O select values into FISCR register
  out FISUA,r17;       ;select line 0 high. Place data on AVR<->FPGA bus
                       ; from r17 register. (out going data is assumed
                       ; to be present in r17 before calling this subroutine)
  ret

;---------------------------------------------

io_select13_read:
  ldi r16,0x01         ;FIADR=0,XFIS1=0,XFIS0=1 ->I/O select line=13
  out FISCR,r16        ;load I/O select values into FISCR register
  in r18,FISUD         ;select line 13 high. Read data on AVR<->FPGA bus
                       ;which was placed into register FISUD.
  ret
```

Figure 33. Out Instruction – AVR Writing to the FPGA

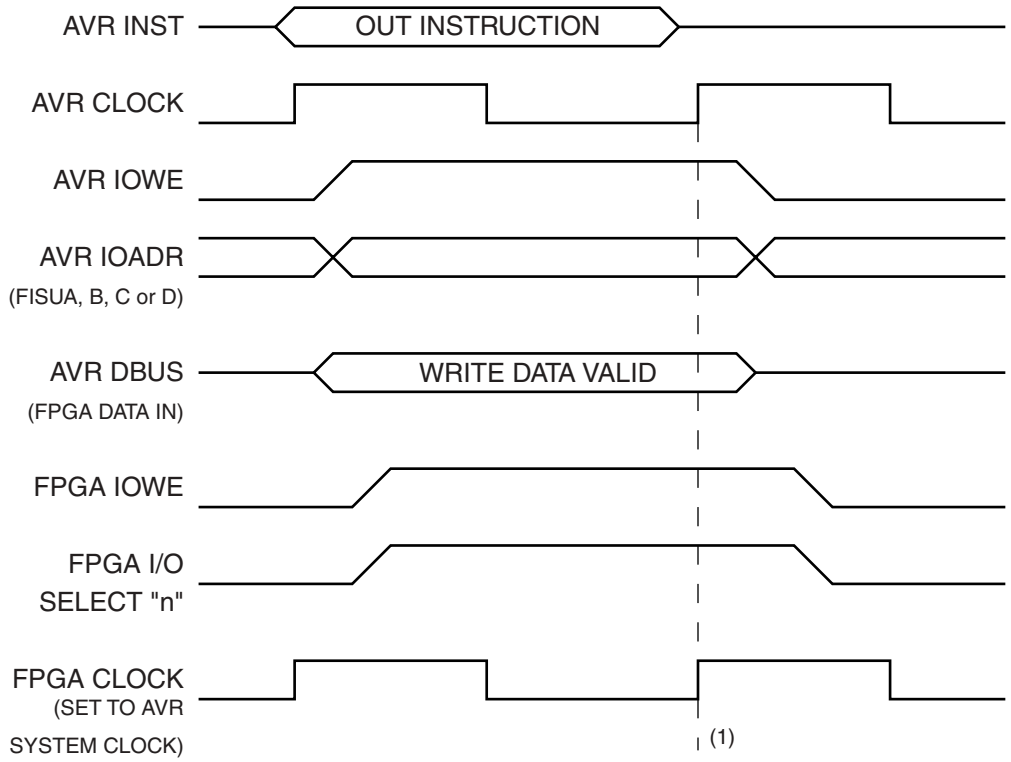

Note: 1. AVR expects Write to be captured by the FPGA upon posedge of the AVR clock.

Figure 34. In Instruction – AVR Reading FPGA

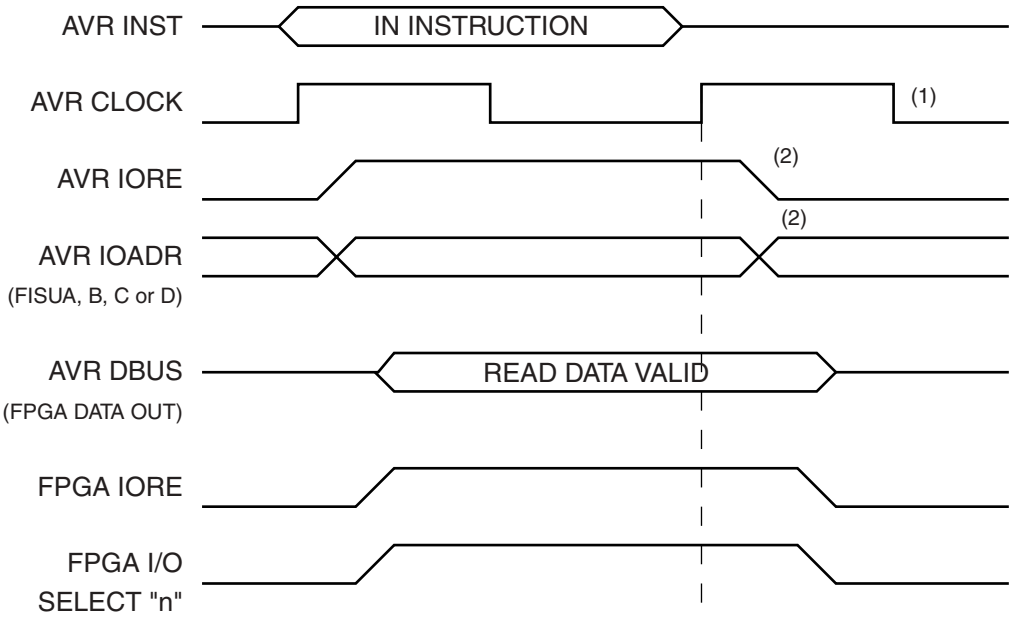

Notes: 1. AVR captures read data upon posedge of the AVR clock.
2. At the end of an FPGA read cycle, there is a chance for the AVR data bus contention between the FPGA and another peripheral to start to drive (active IORE at new address versus FPGAIORE + Select “n”), but since the AVR clock would have already captured the data from AVR DBUS (= FPGA Data Out), this is a “don’t care” situation.

FPGA I/O Interrupt Control by AVR

This is an alternate memory space for the FPGA I/O Select addresses. If the FIADR bit in the FISCR register is set to logic 1, the four I/O addresses, FISUA - FISUD, are mapped to physical registers and provide memory space for FPGA interrupt masking and interrupt flag status. If the FIADR bit in the FISCR register is cleared to a logic 0, the I/O register addresses will be decoded into FPGA select lines.

All FPGA interrupt lines into the AVR are negative edge triggered. See page 58 for interrupt priority.

Interrupt Control Registers – FISUA..D

Bit	7	6	5	4	3	2	1	0	
$14 ($34)	**FIF3**	**FIF2**	**FIF1**	**FIF0**	**FINT3**	**FINT2**	**FINT1**	**FINT0**	**FISUA**
$15 ($35)	**FIF7**	**FIF6**	**FIF5**	**FIF4**	**FINT7**	**FINT6**	**FINT5**	**FINT4**	**FSUB**
$16 ($36)	**FIF11**	**FIF10**	**FIF9**	**FIF8**	**FINT11**	**FINT10**	**FINT9**	**FINT8**	**FISUC**
$17 ($37)	**FIF15**	**FIF14**	**FIF13**	**FIF12**	**FINT15**	**FINT14**	**FINT13**	**FINT12**	**FISUD**
Read/Write	R/W	R/W	R/W	R/W	R/W	R/W	R/W	R/W	
Initial Value	0	0	0	0	0	0	0	0	

- **Bits 7..4 - FIF3 - 0: FPGA Interrupt Flags 3 - 0**

The 16 FPGA interrupt flag bits all work the same. Each is set (one) by a valid negative edge transition on its associated interrupt line from the FPGA. Valid transitions are defined as any change in state preceded by at least two cycles of the old state and succeeded by at least two cycles of the new state. Therefore, it is required that interrupt lines transition from 1 to 0 at least two cycles after the line is stable High; the line must then remain stable Low for at least two cycles following the transition. Each bit is cleared by the hardware when executing the corresponding interrupt handling vector. Alternatively, each bit will be cleared by writing a logic 1 to it. When the I-bit in the Status Register, the corresponding FPGA interrupt mask bit and the given FPGA interrupt flag bit are set (one), the associated interrupt is executed.

- **Bits 7..4 - FIF7 - 4: FPGA Interrupt Flags 7 - 4**

See *Bits 7..4 - FIF3 - 0: FPGA Interrupt Flags 3 - 0*.

- **Bits 7..4 - FIF11 - 8: FPGA Interrupt Flags 11 - 8**

See *Bits 7..4 - FIF3 - 0: FPGA Interrupt Flags 3 - 0*. Not available on the AT94K05.

- **Bits 7..4 - FIF15 - 12: FPGA Interrupt Flags 15 - 12**

See *Bits 7..4 - FIF3 - 0: FPGA Interrupt Flags 3 - 0*. Not available on the AT94K05.

- **Bits 3..0 - FINT3 - 0: FPGA Interrupt Masks 3 - 0**(1)

The 16 FPGA interrupt mask bits all work the same. When a mask bit is set (one) and the I-bit in the Status Register is set (one), the given FPGA interrupt is enabled. The corresponding interrupt handling vector is executed when the given FPGA interrupt flag bit is set (one) by a negative edge transition on the associated interrupt line from the FPGA.

Note: 1. FPGA interrupts 3 - 0 will cause a wake-up from the AVR Sleep modes. These interrupts are treated as low-level triggered in the Power-down and Power-save modes, see “Sleep Modes” on page 66.

- **Bits 3..0 - FINT7 - 4: FPGA Interrupt Masks 7 - 4**

See *Bits 3..0 - FINT3 - 0: FPGA Interrupt Masks 3 - 0.*

- **Bits 3..0 - FINT11 - 8: FPGA Interrupt Masks 11 - 8**

See *Bits 3..0 - FINT3 - 0: FPGA Interrupt Masks 3 - 0.* Not available on the AT94K05.

- **Bits 3..0 - FINT15 - 12: FPGA Interrupt Masks 15 -12**

See *Bits 3..0 - FINT3 - 0: FPGA Interrupt Masks 3 - 0.* Not available on the AT94K05.

Reset and Interrupt Handling

The embedded AVR and FPGA core provide 35 different interrupt sources. These interrupts and the separate reset vector each have a separate program vector in the program memory space. All interrupts are assigned individual enable bits (masks) which must be set (one) together with the I-bit in the status register in order to enable the interrupt.

The lowest addresses in the program memory space must be defined as the Reset and Interrupt vectors. The complete list of vectors is shown in Table 15. The list also determines the priority levels of the different interrupts. The lower the address the higher the priority level. RESET has the highest priority, and next is FPGA_INT0 – the FPGA Interrupt Request 0 etc.

Table 15. Reset and Interrupt Vectors

Vector No. (hex)	Program Address	Source	Interrupt Definition
01	$0000	RESET	Reset Handle: Program Execution Starts Here
02	$0002	FPGA_INT0	FPGA Interrupt0 Handle
03	$0004	EXT_INT0	External Interrupt0 Handle
04	$0006	FPGA_INT1	FPGA Interrupt1 Handle
05	$0008	EXT_INT1	External Interrupt1 Handle
06	$000A	FPGA_INT2	FPGA Interrupt2 Handle
07	$000C	EXT_INT2	External Interrupt2 Handle
08	$000E	FPGA_INT3	FPGA Interrupt3 Handle
09	$0010	EXT_INT3	External Interrupt3 Handle
0A	$0012	TIM2_COMP	Timer/Counter2 Compare Match Interrupt Handle
0B	$0014	TIM2_OVF	Timer/Counter2 Overflow Interrupt Handle
0C	$0016	TIM1_CAPT	Timer/Counter1 Capture Event Interrupt Handle
0D	$0018	TIM1_COMPA	Timer/Counter1 Compare Match A Interrupt Handle
0E	$001A	TIM1_COMPB	Timer/Counter1 Compare Match B Interrupt Handle
0F	$001C	TIM1_OVF	Timer/Counter1 Overflow Interrupt Handle
10	$001E	TIM0_COMP	Timer/Counter0 Compare Match Interrupt Handle
11	$0020	TIM0_OVF	Timer/Counter0 Overflow Interrupt Handle
12	$0022	FPGA_INT4	FPGA Interrupt4 Handle
13	$0024	FPGA_INT5	FPGA Interrupt5 Handle
14	$0026	FPGA_INT6	FPGA Interrupt6 Handle
15	$0028	FPGA_INT7	FPGA Interrupt7 Handle
16	$002A	UART0_RXC	UART0 Receive Complete Interrupt Handle

Table 15. Reset and Interrupt Vectors (Continued)

Vector No. (hex)	Program Address	Source	Interrupt Definition
17	$002C	UART0_DRE	UART0 Data Register Empty Interrupt Handle
18	$002E	UART0_TXC	UART0 Transmit Complete Interrupt Handle
19	$0030	FPGA_INT8	FPGA Interrupt8 Handle (not available on AT94K05)
1A	$0032	FPGA_INT9	FPGA Interrupt9 Handle (not available on AT94K05)
1B	$0034	FPGA_INT10	FPGA Interrupt10 Handle (not available on AT94K05)
1C	$0036	FPGA_INT11	FPGA Interrupt11 Handle (not available on AT94K05)
1D	$0038	UART1_RXC	UART1 Receive Complete Interrupt Handle
1E	$003A	UART1_DRE	UART1 Data Register Empty Interrupt Handle
1F	$003C	UART1_TXC	UART1 Transmit Complete Interrupt Handle
20	$003E	FPGA_INT12	FPGA Interrupt12 Handle (not available on AT94K05)
21	$0040	FPGA_INT13	FPGA Interrupt13 Handle (not available on AT94K05)
22	$0042	FPGA_INT14	FPGA Interrupt14 Handle (Not Available on AT94K05)
23	$0044	FPGA_INT15	FPGA Interrupt15 Handle (not available on AT94K05)
24	$0046	TWS_INT	2-wire Serial Interrupt

The most typical program setup for the Reset and Interrupt Vector Addresses are:

```
Address   Labels   Code            Comments
$0000     jmp      RESET           Reset Handle: Program Execution Starts Here
$0002     jmp      FPGA_INT0       ; FPGA Interrupt0 Handle
$0004     jmp      EXT_INT0        ; External Interrupt0 Handle
$0006     jmp      FPGA_INT1       ; FPGA Interrupt1 Handle
$0008     jmp      EXT_INT1        ; External Interrupt1 Handle
$000A     jmp      FPGA_INT2       ; FPGA Interrupt2 Handle
$000C     jmp      EXT_INT2        ; External Interrupt2 Handle
$000E     jmp      FPGA_INT3       ; FPGA Interrupt3 Handle
$0010     jmp      EXT_INT3        ; External Interrupt3 Handle
$0012     jmp      TIM2_COMP       ; Timer/Counter2 Compare Match Interrupt Handle
$0014     jmp      TIM2_OVF        ; Timer/Counter2 Overflow Interrupt Handle
$0016     jmp      TIM1_CAPT       ; Timer/Counter1 Capture Event Interrupt Handle
$0018     jmp      TIM1_COMPA      ; Timer/Counter1 Compare Match A Interrupt Handle
$001A     jmp      TIM1_COMPB      ; Timer/Counter1 Compare Match B Interrupt Handle
$001C     jmp      TIM1_OVF        ; Timer/Counter1 Overflow Interrupt Handle
$001E     jmp      TIM0_COMP       ; Timer/Counter0 Compare Match Interrupt Handle
$0020     jmp      TIM0_OVF        ; Timer/Counter0 Overflow Interrupt Handle
$0022     jmp      FPGA_INT4       ; FPGA Interrupt4 Handle
$0024     jmp      FPGA_INT5       ; FPGA Interrupt5 Handle
$0026     jmp      FPGA_INT6       ; FPGA Interrupt6 Handle
$0028     jmp      FPGA_INT7       ; FPGA Interrupt7 Handle
$002A     jmp      UART0_RXC       ; UART0 Receive Complete Interrupt Handle
$002C     jmp      UART0_DRE       ; UART0 Data Register Empty Interrupt Handle
$002E     jmp      UART0_TXC       ; UART0 Transmit Complete Interrupt Handle
$0030     jmp      FPGA_INT8       ; FPGA Interrupt8 Handle(1)
$0032     jmp      FPGA_INT9       ; FPGA Interrupt9 Handle(1)
$0034     jmp      FPGA_INT10      ; FPGA Interrupt10 Handle(1)
$0036     jmp      FPGA_INT11      ; FPGA Interrupt11 Handle(1)
$0038     jmp      UART1_RXC       ; UART1 Receive Complete Interrupt Handle
$003A     jmp      UART1_DRE       ; UART1 Data Register Empty Interrupt Handle
$003C     jmp      UART1_TXC       ; UART1 Transmit Complete Interrupt Handle
$003E     jmp      FPGA_INT12      ; FPGA Interrupt12 Handle(1)
$0040     jmp      FPGA_INT13      ; FPGA Interrupt13 Handle(1)
$0042     jmp      FPGA_INT14      ; FPGA Interrupt14 Handle(1)
$0044     jmp      FPGA_INT15      ; FPGA Interrupt15 Handle(1)
$0046     jmp      TWS_INT         ; 2-wire Serial Interrupt
;
RESET:
$0048     ldi      r16,high(RAMEND)  ; Main program start
$0049     out      SPH,r16

$004A     ldi      r16,low(RAMEND)
$004B     out      SPL,r16
$004C     <instr>  xxx
  ...       ...      ...
```

Note: 1. Not Available on AT94K05. However, the vector jump table positions must be maintained for appropriate UART and 2-wire serial interrupt jumps.

Reset Sources

The embedded AVR core has five sources of reset:

- External Reset. The MCU is reset immediately when a low-level is present on the RESET or AVR RESET pin.
- Power-on Reset. The MCU is reset upon chip power-up and remains in reset until the FPGA configuration has entered Idle mode.
- Watchdog Reset. The MCU is reset when the Watchdog Timer period expires and the watchdog is enabled.
- Software Reset. The MCU is reset when the SRST bit in the Software Control register is set (one).
- JTAG AVR Reset. The MCU is reset as long as there is a logic one in the Reset Register, one of the scan chains of the JTAG system. See “IEEE 1149.1 (JTAG) Boundary-scan” on page 73.

During reset, all I/O registers except the MCU Status register are then set to their Initial Values, and the program starts execution from address $0000. The instruction placed in address $0000 must be a JMP – absolute jump instruction to the reset handling routine. If the program never enables an interrupt source, the interrupt vectors are not used, and regular program code can be placed at these locations. The circuit diagram in Figure 35 shows the reset logic. Table 16 defines the timing and electrical parameters of the reset circuitry.

Figure 35. Reset Logic

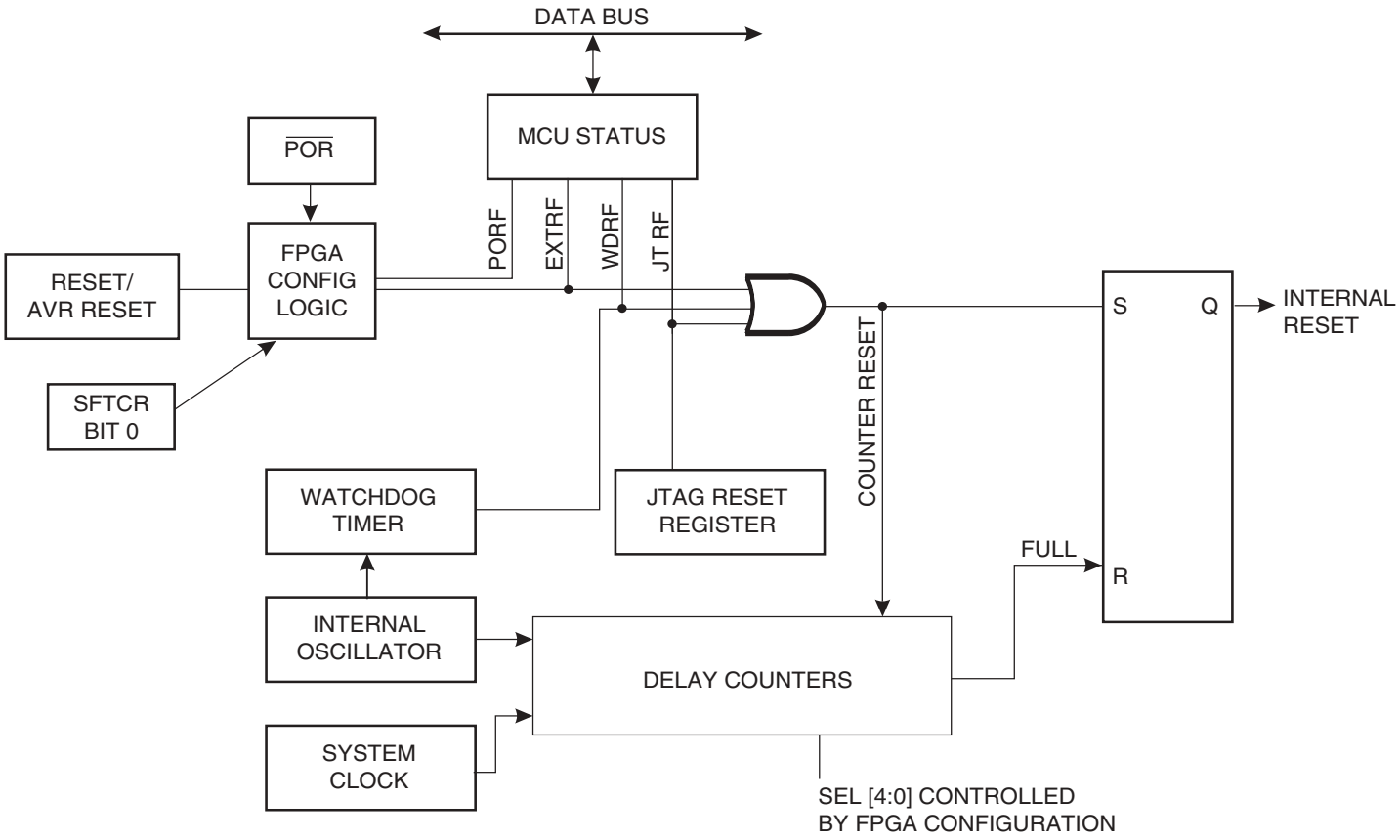

Table 16. Reset Characteristics (V_{CC} = 3.3V)

Symbol	Parameter	Minimum	Typical	Maximum	Units
$V_{POT(1)}$	Power-on Reset Threshold (Rising)	1.0	1.4	1.8	V
	Power-on Reset Threshold (Falling)	0.4	0.6	0.8	V
V_{RST}	$\overline{RESET}$ Pin Threshold Voltage		$V_{CC}/2$		V
T_{TOUT}	Reset Delay Time-out Period		5		CPU cycles
		0.4 3.2 12.8	0.5 4.0 16.0	0.6 4.8 19.2	ms

Note: 1. The Power-on Reset will not work unless the supply voltage has been below V_{POT} (falling).

Power-on Reset

A Power-on Reset (POR) circuit ensures that the device is reset from power-on. As shown in Figure 35, an internal timer clocked from the Watchdog Timer oscillator prevents the MCU from starting until after a certain period after V_{CC} has reached the Power-on Threshold voltage – V_{POT}, regardless of the V_{CC} rise time (see Figure 36 and Figure 37).

Figure 36. MCU Start-up, $\overline{RESET}$ Tied to V_{CC}

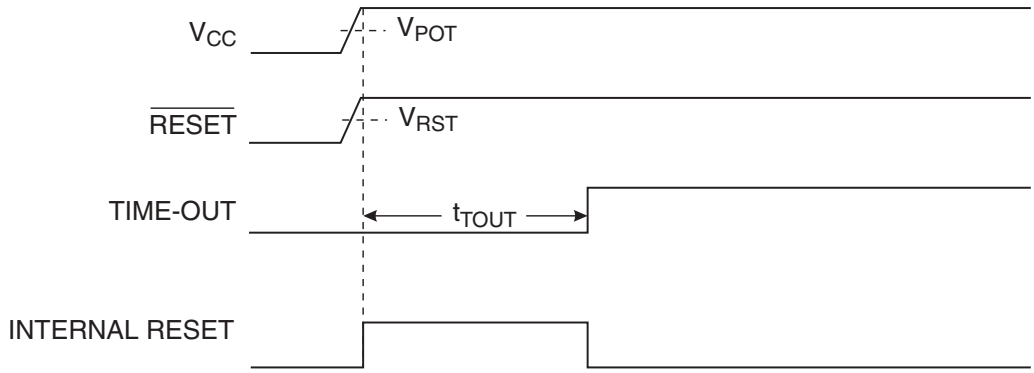

Figure 37. Watchdog Reset during Operation

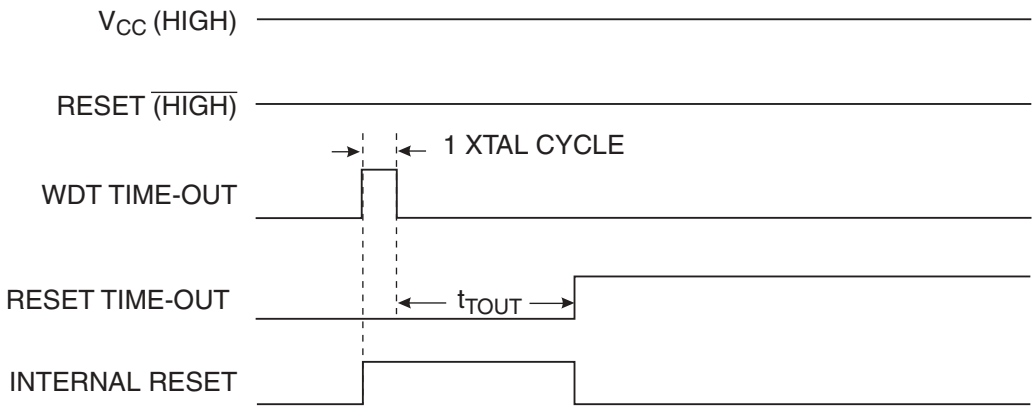

The MCU after five CPU clock-cycles, and can be used when an external clock signal is applied to the XTAL1 pin. This setting does not use the WDT oscillator, and enables very fast start-up from the Sleep, Power-down or Power-save modes if the clock signal is present during sleep.

RESET can be connected to V_{CC} directly or via an external pull-up resistor. By holding the pin Low for a period after V_{CC} has been applied, the Power-on Reset period can be extended. Refer to Figure 38 for a timing example on this.

Figure 38. MCU Start-up, $\overline{\text{RESET}}$ Controlled Externally

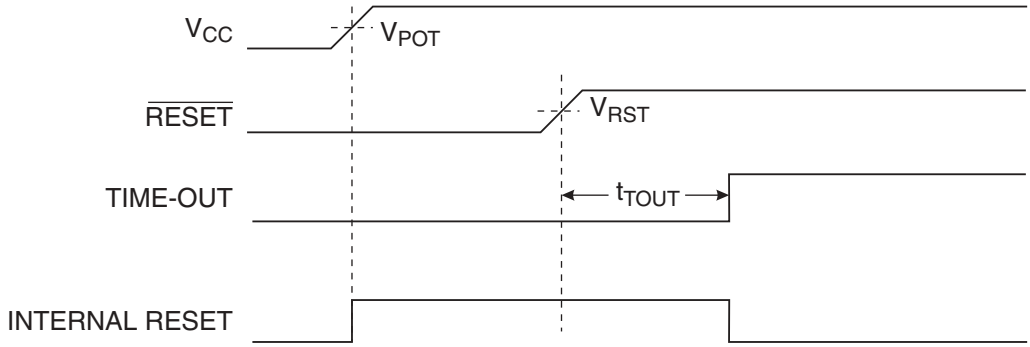

External Reset

An external reset is generated by a low-level on the AVRRESET pin. When the applied signal reaches the Reset Threshold Voltage – V_{RST} – on its positive edge, the delay timer starts the MCU after the Time-out period t_{TOUT} has expired.

Watchdog Reset

When the Watchdog times out, it will generate a short reset pulse of 1 XTAL cycle duration. On the falling edge of this pulse, the delay timer starts counting the Time-out period t_{TOUT}. Time-out period t_{TOUT} is approximately 3 µs – at V_{CC} = 3.3V. the period of the time out is voltage dependent.

Software Reset

See “Software Control of System Configuration” on page 51.

Interrupt Handling

The embedded AVR core has one dedicated 8-bit Interrupt Mask control register: TIMSK – Timer/Counter Interrupt Mask Register. In addition, other enable and mask bits can be found in the peripheral control registers.

When an interrupt occurs, the Global Interrupt Enable I-bit is cleared (zero) and all interrupts are disabled. The user software can set (one) the I-bit to enable nested interrupts. The I-bit is set (one) when a Return from Interrupt instruction (RETI) is executed.

When the Program Counter is vectored to the actual interrupt vector in order to execute the interrupt handling routine, the hardware clears the corresponding flag that generated the interrupt. Some of the interrupt flags can also be cleared by writing a logic 1 to the flag bit position(s) to be cleared.

If an interrupt condition occurs when the corresponding interrupt enable bit is cleared (zero), the interrupt flag will be set and remembered until the interrupt is enabled, or the flag is cleared by software.

If one or more interrupt conditions occur when the global interrupt enable bit is cleared (zero), the corresponding interrupt flag(s) will be set and remembered until the global interrupt enable bit is set (one), and will be executed by order of priority.

The status register is not automatically stored when entering an interrupt routine and restored when returning from an interrupt routine. This must be handled by software.

External Interrupt Mask/Flag Register – EIMF

Bit	7	6	5	4	3	2	1	0	
$3B ($5B)	**INTF3**	**INTF2**	**INTF1**	**INTF0**	**INT3**	**INT2**	**INT1**	**INT0**	**EIMF**
Read/Write	R/W	R/W	R/W	R/W	R/W	R/W	R/W	R/W	
Initial Value	0	0	0	0	0	0	0	0	

- **Bits 3..0 - INT3, 2, 1, 0: External Interrupt Request 3, 2, 1, 0 Enable**

When an INT3 - INT0 bit is set (one) and the I-bit in the Status Register (SREG) is set (one), the corresponding external pin interrupt is enabled. The external interrupts are always negative edge triggered interrupts, see “Sleep Modes” on page 66.

- **Bits 7..4 - INTF3, 2, 1, 0: External Interrupt 3, 2, 1, 0 Flags**

When a falling edge is detected on the INT3, 2, 1, 0 pins, an interrupt request is triggered. The corresponding interrupt flag, INTF3, 2, 1, 0 becomes set (one). If the I-bit in SREG and the corresponding interrupt enable bit, INT3, 2, 1, 0 in EIMF, are set (one), the MCU will jump to the interrupt vector. The flag is cleared when the interrupt routine is executed. Alternatively, the flag is cleared by writing a logic 1 to it.

Timer/Counter Interrupt Mask Register – TIMSK

Bit	7	6	5	4	3	2	1	0	
$39 ($39)	**TOIE1**	**OCIE1A**	**OCIE1B**	**TOIE2**	**TICIE1**	**OCIE2**	**TOIE0**	**OCIE0**	**TIMSK**
Read/Write	R/W	R/W	R/W	R/W	R/W	R/W	R/W	R/W	
Initial Value	0	0	0	0	0	0	0	0	

- **Bit 7 - TOIE1: Timer/Counter1 Overflow Interrupt Enable**

When the TOIE1 bit is set (one) and the I-bit in the Status Register is set (one), the Timer/Counter1 Overflow interrupt is enabled. The corresponding interrupt is executed if an overflow in Timer/Counter1 occurs, i.e., when the TOV1 bit is set in the Timer/Counter Interrupt Flag Register – TIFR.

- **Bit 6 - OCIE1A: Timer/Counter1 Output CompareA Match Interrupt Enable**

When the OCIE1A bit is set (one) and the I-bit in the Status Register is set (one), the Timer/Counter1 CompareA Match interrupt is enabled. The corresponding interrupt is executed if a CompareA match in Timer/Counter1 occurs, i.e., when the OCF1A bit is set in the Timer/Counter Interrupt Flag Register – TIFR.

- **Bit 5 - OCIE1B: Timer/Counter1 Output CompareB Match Interrupt Enable**

When the OCIE1B bit is set (one) and the I-bit in the Status Register is set (one), the Timer/Counter1 CompareB Match interrupt is enabled. The corresponding interrupt is executed if a CompareB match in Timer/Counter1 occurs, i.e., when the OCF1B bit is set in the Timer/Counter Interrupt Flag Register – TIFR.

- **Bit 4 - TOIE2: Timer/Counter2 Overflow Interrupt Enable**

When the TOIE2 bit is set (one) and the I-bit in the Status Register is set (one), the Timer/Counter2 overflow interrupt is enabled. The corresponding interrupt is executed if an overflow in Timer/Counter2 occurs, i.e., when the TOV2 bit is set in the Timer/Counter interrupt flag register – TIFR.

- **Bit 3 - TICIE1: Timer/Counter1 Input Capture Interrupt Enable**

When the TICIE1 bit is set (one) and the I-bit in the Status Register is set (one), the Timer/Counter1 input capture event interrupt is enabled. The corresponding interrupt is executed if a capture-triggering event occurs on pin 29, (IC1), i.e., when the ICF1 bit is set in the Timer/Counter interrupt flag register – TIFR.

- **Bit 2 - OCIE2: Timer/Counter2 Output Compare Interrupt Enable**

When the OCIE2 bit is set (one) and the I-bit in the Status Register is set (one), the Timer/Counter2 Compare Match interrupt is enabled. The corresponding interrupt is executed if a Compare match in Timer/Counter2 occurs, i.e., when the OCF2 bit is set in the Timer/Counter interrupt flag register – TIFR.

- **Bit 1 - TOIE0: Timer/Counter0 Overflow Interrupt Enable**

When the TOIE0 bit is set (one) and the I-bit in the Status Register is set (one), the Timer/Counter0 Overflow interrupt is enabled. The corresponding interrupt is executed if an overflow in Timer/Counter0 occurs, i.e., when the TOV0 bit is set in the Timer/Counter Interrupt Flag Register – TIFR.

- **Bit 0 - OCIE0: Timer/Counter0 Output Compare Interrupt Enable**

When the OCIE0 bit is set (one) and the I-bit in the Status Register is set (one), the Timer/Counter0 Compare Match interrupt is enabled. The corresponding interrupt is executed if a Compare match in Timer/Counter0 occurs, i.e., when the OCF0 bit is set in the Timer/Counter Interrupt Flag Register – TIFR.

Timer/Counter Interrupt Flag Register – TIFR

Bit	7	6	5	4	3	2	1	0	
$38 ($58)	**TOV1**	**OCF1A**	**OCF1B**	**TOV2**	**ICF1**	**OCF2**	**TOV0**	**OCF0**	**TIFR**
Read/Write	R/W	R/W	R/W	R/W	R/W	R/W	R/W	R/W	
Initial Value	0	0	0	0	0	0	0	0	

- **Bit 7 - TOV1: Timer/Counter1 Overflow Flag**

The TOV1 is set (one) when an overflow occurs in Timer/Counter1. TOV1 is cleared by the hardware when executing the corresponding interrupt handling vector. Alternatively, TOV1 is cleared by writing a logic 1 to the flag. When the I-bit in SREG, and TOIE1 (Timer/Counter1 Overflow Interrupt Enable), and TOV1 are set (one), the Timer/Counter1 Overflow Interrupt is executed. In PWM mode, this bit is set when Timer/Counter1 advances from $0000.

- **Bit 6 - OCF1A: Output Compare Flag 1A**

The OCF1A bit is set (one) when compare match occurs between the Timer/Counter1 and the data in OCR1A – Output Compare Register 1A. OCF1A is cleared by the hardware when executing the corresponding interrupt handling vector. Alternatively, OCF1A is cleared by writing a logic 1 to the flag. When the I-bit in SREG, and OCIE1A (Timer/Counter1 Compare Interrupt Enable), and the OCF1A are set (one), the Timer/Counter1 Compare A match Interrupt is executed.

- **Bit 5 - OCF1B: Output Compare Flag 1B**

The OCF1B bit is set (one) when compare match occurs between the Timer/Counter1 and the data in OCR1B – Output Compare Register 1B. OCF1B is cleared by the hardware when executing the corresponding interrupt handling vector. Alternatively, OCF1B is cleared by writing a logic 1 to the flag. When the I-bit in SREG, and OCIE1B (Timer/Counter1 Compare match Interrupt Enable), and the OCF1B are set (one), the Timer/Counter1 Compare B match Interrupt is executed.

- **Bit 4 - TOV2: Timer/Counter2 Overflow Flag**

The TOV2 bit is set (one) when an overflow occurs in Timer/Counter2. TOV2 is cleared by the hardware when executing the corresponding interrupt handling vector. Alternatively, TOV2 is cleared by writing a logic 1 to the flag. When the I-bit in SREG, and TOIE2 (Timer/Counter1 Overflow Interrupt Enable), and TOV2 are set (one), the Timer/Counter2 Overflow Interrupt is executed. In PWM mode, this bit is set when Timer/Counter2 advances from $00.

- **Bit 3 - ICF1: Input Capture Flag 1**

The ICF1 bit is set (one) to flag an input capture event, indicating that the Timer/Counter1 value has been transferred to the input capture register – ICR1. ICF1 is cleared by the hardware when executing the corresponding interrupt handling vector. Alternatively, ICF1 is cleared by writing a logic 1 to the flag. When the SREG I-bit, and TICIE1 (Timer/Counter1 Input Capture Interrupt Enable), and ICF1 are set (one), the Timer/Counter1 Capture Interrupt is executed.

- **Bit 2 - OCF2: Output Compare Flag 2**

The OCF2 bit is set (one) when compare match occurs between Timer/Counter2 and the data in OCR2 – Output Compare Register 2. OCF2 is cleared by the hardware when executing the corresponding interrupt handling vector. Alternatively, OCF2 is cleared by writing a logic 1 to the flag. When the I-bit in SREG, and OCIE2 (Timer/Counter2 Compare Interrupt Enable), and the OCF2 are set (one), the Timer/Counter2 Output Compare Interrupt is executed.

- **Bit 1 - TOV0: Timer/Counter0 Overflow Flag**

The TOV0 bit is set (one) when an overflow occurs in Timer/Counter0. TOV0 is cleared by the hardware when executing the corresponding interrupt handling vector. Alternatively, TOV0 is cleared by writing a logic 1 to the flag. When the SREG I-bit, and TOIE0 (Timer/Counter0 Overflow Interrupt Enable), and TOV0 are set (one), the Timer/Counter0 Overflow interrupt is executed. In PWM mode, this bit is set when Timer/Counter0 advances from $00.

- **Bit 0 - OCF0: Output Compare Flag 0**

The OCF0 bit is set (one) when compare match occurs between Timer/Counter0 and the data in OCR0 – Output Compare Register 0. OCF0 is cleared by the hardware when executing the corresponding interrupt handling vector. Alternatively, OCF0 is cleared by writing a logic 1 to the flag. When the I-bit in SREG, and OCIE0 (Timer/Counter2 Compare Interrupt Enable), and the OCF0 are set (one), the Timer/Counter0 Output Compare Interrupt is executed.

Interrupt Response Time

The interrupt execution response for all the enabled AVR interrupts is four clock cycles minimum. Four clock cycles after the interrupt flag has been set, the program vector address for the actual interrupt handling routine is executed. During this four clock-cycle period, the Program Counter (2 bytes) is pushed onto the Stack, and the Stack Pointer is decremented by 2. The vector is normally a jump to the interrupt routine, and this jump takes three clock cycles. If an interrupt occurs during execution of a multi-cycle instruction, this instruction is completed before the interrupt is serviced.

A return from an interrupt handling routine (same as for a subroutine call routine) takes four clock cycles. During these four clock cycles, the Program Counter (2 bytes) is popped back from the Stack, and the Stack Pointer is incremented by 2. When the AVR exits from an interrupt, it will always return to the main program and execute one more instruction before any pending interrupt is serviced.

Sleep Modes

To enter any of the three Sleep modes, the SE bit in MCUR must be set (one) and a SLEEP instruction must be executed. The SM1 and SM0 bits in the MCUR register select which Sleep mode (Idle, Power-down, or Power-save) will be activated by the SLEEP instruction, see Table 12 on page 52.

In Power-down and Power-save modes, the four external interrupts, EXT_INT0...3, and FPGA interrupts, FPGA INT0...3, are triggered as low level-triggered interrupts. If an enabled interrupt occurs while the MCU is in a Sleep mode, the MCU awakes, executes the interrupt routine, and resumes execution from the instruction following SLEEP. The contents of the register file, SRAM, and I/O memory are unaltered. If a reset occurs during Sleep mode, the MCU wakes up and executes from the Reset vector

Idle Mode

When the SM1/SM0 bits are set to 00, the SLEEP instruction makes the MCU enter the Idle mode, stopping the CPU but allowing UARTs, Timer/Counters, Watchdog 2-wire Serial and the Interrupt System to continue operating. This enables the MCU to wake-up from external triggered interrupts as well as internal ones like the Timer Overflow and UART Receive Complete interrupts. When the MCU wakes up from Idle mode, the CPU starts program execution immediately.

Power-down Mode

When the SM1/SM0 bits are set to 10, the SLEEP instruction makes the MCU enter the Power-down mode. In this mode, the external oscillator is stopped, while the external interrupts and the watchdog (if enabled) continue operating. Only an external reset, a watchdog reset (if enabled), or an external level interrupt can wake-up the MCU.

In Power-down and Power-save modes, the four external interrupts, EXT_INT0...3, and FPGA interrupts, FPGA_INT0...3, are treated as low-level triggered interrupts.

If a level-triggered interrupt is used for wake-up from Power-down mode, the changed level must be held for some time to wake-up the MCU. This makes the MCU less sensitive to noise. The changed level is sampled twice by the watchdog oscillator clock, and if the input has the required level during this time, the MCU will wake-up. The period of the watchdog oscillator is 1 µs (nominal) at 3.3V and 25°C. The frequency of the watchdog oscillator is voltage dependent.

When waking up from Power-down mode, there is a delay from the wake-up condition occurs until the wake-up becomes effective. This allows the clock to restart and become stable after having been stopped. The wake-up period is defined by the same time-set bits that define the reset time-out period. The wake-up period is equal to the clock reset period, as shown in Figure 22 on page 89.

If the wake-up condition disappears before the MCU wakes up and starts to execute, the interrupt causing the wake-up will not be executed.

Power-save Mode

When the SM1/SM0 bits are 11, the SLEEP instruction makes the MCU enter the Power-save mode. This mode is identical to power-down, with one exception:

If Timer/Counter2 is clocked asynchronously, i.e., the AS2 bit in ASSR is set, Timer/Counter2 will run during sleep. In addition to the power-down wake-up sources, the device can also wake-up from either Timer Overflow or Output Compare event from Timer/Counter2 if the corresponding Timer/Counter2 interrupt enable bits are set in TIMSK. To ensure that the part executes the Interrupt routine when waking up, also set the global interrupt enable bit in SREG.

When waking up from Power-save mode by an external interrupt, two instruction cycles are executed before the interrupt flags are updated. When waking up by the asynchronous timer, three instruction cycles are executed before the flags are updated. During these cycles, the processor executes instructions, but the interrupt condition is not readable, and the interrupt routine has not started yet. See Table 3 on page 15 for clock activity during Power-down, Power-save and Idle modes.

JTAG Interface and On-chip Debug System

Features

- **JTAG (IEEE std. 1149.1 Compliant) Interface**
- **AVR I/O Boundary-scan Capabilities According to the JTAG Standard**
- **Debugger Access to:**
  - **All Internal Peripheral Units**
  - **AVR Program and Data SRAM**
  - **The Internal Register File**
  - **Program Counter/Instruction**
  - **FPGA/AVR Interface**
- **Extensive On-chip Debug Support for Break Conditions, Including**
  - **Break on Change of Program Memory Flow**
  - **Single Step Break**
  - **Program Memory Breakpoints on Single Address or Address Range**
  - **Data Memory Breakpoints on Single Address or Address Range**
  - **FPGA Hardware Break**
  - **Frame Memory Breakpoint on Single Address**
- **On-chip Debugging Supported by AVR Studio version 4 or above**

Overview

The AVR IEEE std. 1149.1 compliant JTAG interface is used for on-chip debugging.

The On-Chip Debug support is considered being private JTAG instructions, and distributed within ATMEL and to selected third-party vendors only.

Figure 39 shows a block diagram of the JTAG interface and the On-Chip Debug system. The TAP Controller is a state machine controlled by the TCK and TMS signals. The TAP Controller selects either the JTAG Instruction Register or one of several Data Registers as the scan chain (shift register) between the TDI - input and TDO - output. The Instruction Register holds JTAG instructions controlling the behavior of a Data Register.

Of the Data Registers, the ID-Register, Bypass Register, and the AVR I/O Boundary-Scan Chain are used for board-level testing. The Internal Scan Chain and Break-Point Scan Chain are used for On-Chip debugging only.

The Test Access Port – TAP

The JTAG interface is accessed through four of the AVR's pins. In JTAG terminology, these pins constitute the Test Access Port - TAP. These pins are:

- TMS: Test Mode Select. This pin is used for navigating through the TAP-controller state machine.
- TCK: Test Clock. JTAG operation is synchronous to TCK
- TDI: Test Data In. Serial input data to be shifted in to the Instruction Register or Data Register (Scan Chains)
- TDO: Test Data Out. Serial output data from Instruction register or Data Register

The IEEE std. 1149.1 also specifies an optional TAP signal; TRST - Test ReSeT - which is not provided.

When the JTAGEN bit is unprogrammed, these four TAP pins revert to normal operation. When programmed, the input TAP signals are internally pulled High and the JTAG is enabled for Boundary-Scan. System Designer sets this bit by default.

For the On-Chip Debug system, in addition the $\overline{\text{RESET}}$ pin is monitored by the debugger to be able to detect external reset sources. The debugger can also pull the $\overline{\text{RESET}}$ pin Low to reset the whole system, assuming only open collectors on reset line are used in the application.

Figure 39. Block Diagram

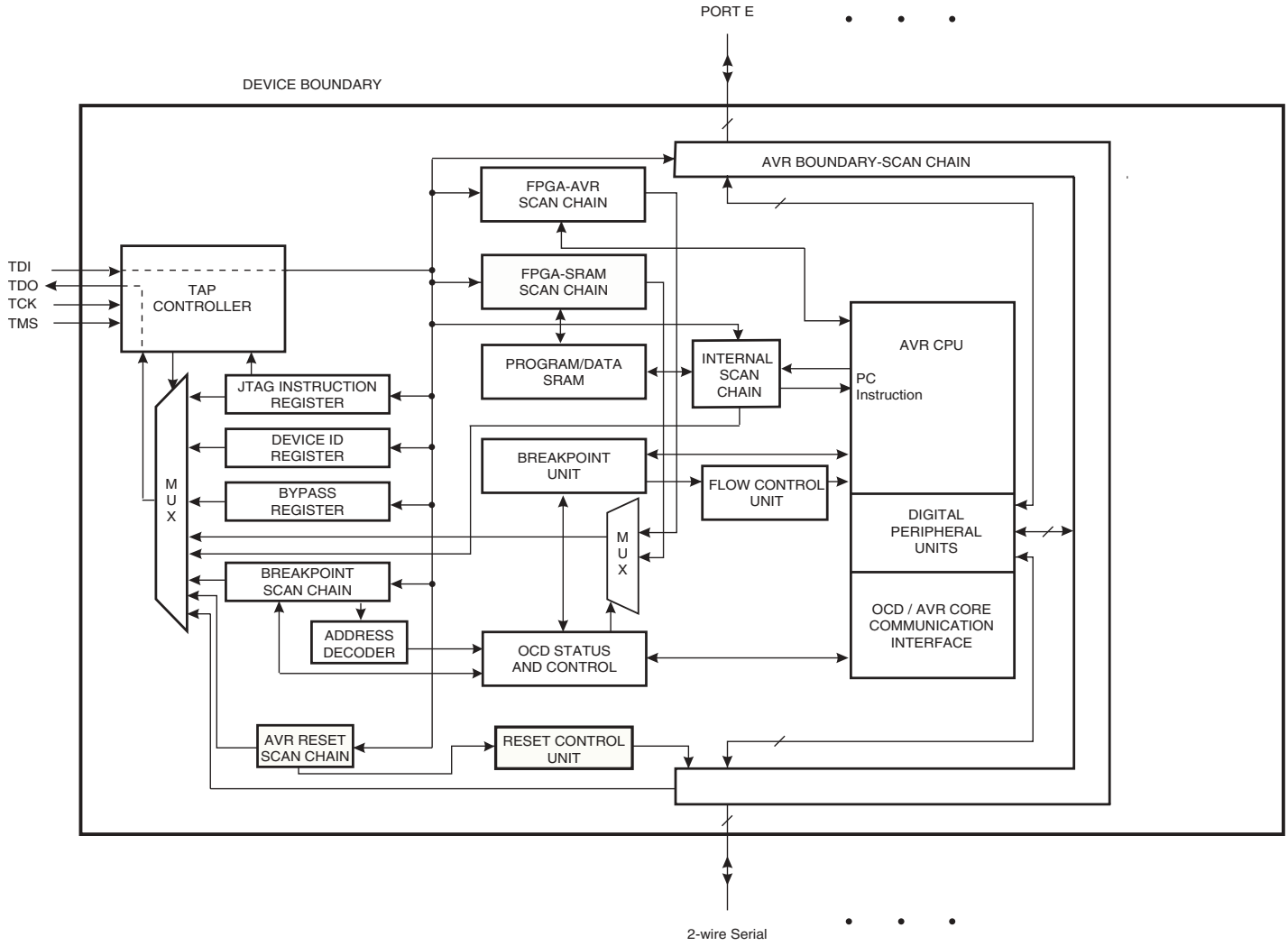

Figure 40. TAP Controller State Diagram

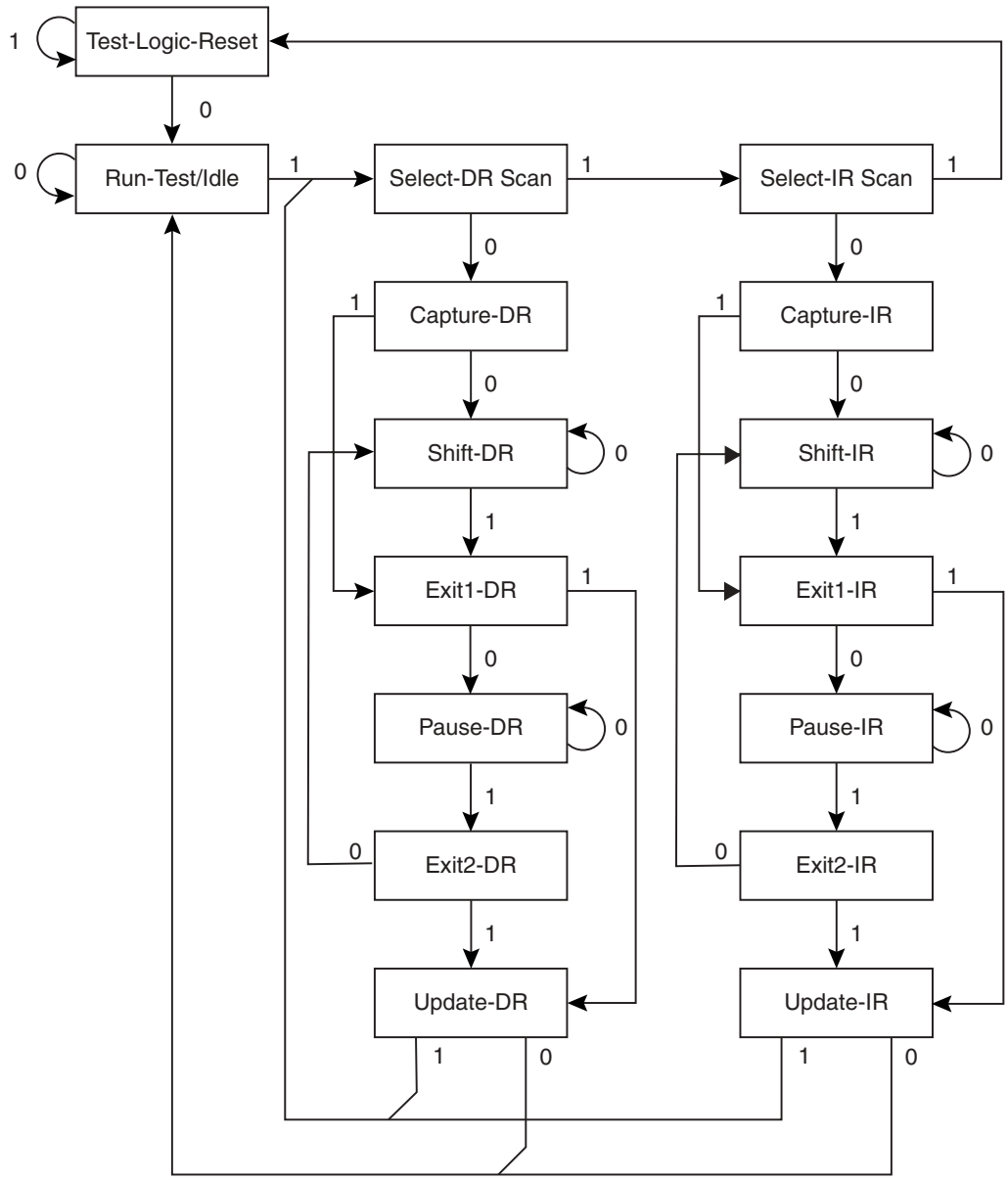

TAP Controller

The TAP controller is a 16-state finite state machine that controls the operation of the Boundary-Scan circuitry and On-Chip Debug system. The state transitions depicted in Figure 40 depend on the signal present on TMS (shown adjacent to each state transition) at the time of the rising edge at TCK. The initial state after a Power-On Reset is Test-Logic-Reset.

As a definition in this document, the LSB is shifted in and out first for all shift registers.

Assuming Run-Test/Idle is the present state, a typical scenario for using the JTAG interface is

- At the TMS input, apply the sequence 1, 1, 0, 0 at the rising edges of TCK to enter the Shift Instruction Register - Shift-IR state. While TMS is Low, shift the 4 bit JTAG instructions into the JTAG instruction register from the TDI input at the rising edge of TCK, while the captured IR-state 0x01 is shifts out on the TDO pin. The JTAG Instruction selects a particular Data Register as path between TDI and TDO and controls the circuitry surrounding the selected Data Register.
- Apply the TMS sequence 1, 1, 0 to re-enter the Run-Test/Idle state. The instruction is latched onto the parallel output from the shift register path in the Update-IR state. The Exit-IR, Pause-IR, and Exit2-IR states are only used for navigating the state machine.
- At the TMS input, apply the sequence 1, 0, 0 at the rising edges of TCK to enter the Shift Data Register - Shift-DR state. While TMS is Low, upload the selected Data Register (selected by the present JTAG instruction in the JTAG Instruction Register) from the TDI input at the rising edge of TCK. At the same time, the parallel inputs to the Data Register captured in the Capture-DR state shifts out on the TDO pin.
- Apply the TMS sequence 1, 1, 0 to re-enter the Run-Test/Idle state. If the selected Data Register has a latched parallel-output, the latching takes place in the Update-DR state. The Exit-DR, Pause-DR, and Exit2-DR states are only used for navigating the state machine.

As shown in Figure 40 on page 70, the Run-Test/Idle[1] state need not be entered between selecting JTAG instruction and using Data Registers, and some JTAG instructions may select certain functions to be performed in the Run-Test/Idle, making it unsuitable as an Idle state.

Note: 1. Independent of the initial state of the TAP Controller, the Test-Logic-Reset state can always be entered by holding TMS High for 5 TCK clock periods.

Using the Boundary-scan Chain

A complete description of the Boundary-Scan capabilities are given in the section “IEEE 1149.1 (JTAG) Boundary-scan” on page 73.

Using the On-chip Debug System

As shown in Figure 39, the hardware support for On-Chip Debugging consists mainly of

- A scan chain on the interface between the internal AVR CPU and the internal peripheral units
- A breakpoint unit
- A communication interface between the CPU and JTAG system
- A scan chain on the interface between the internal AVR CPU and the FPGA
- A scan chain on the interface between the internal Program/Data SRAM and the FPGA

All read or modify/write operations needed for implementing the Debugger are done by applying AVR instructions via the internal AVR CPU Scan Chain. The CPU sends the result to an I/O memory mapped location which is part of the communication interface between the CPU and the JTAG system.

The Breakpoint Unit implements Break on Change of Program Flow, Single Step Break, 2 Program Memory Breakpoints, and 2 combined break points. Together, the 4 break-points can be configured as either:

- 4 single Program Memory break points
- 3 Single Program Memory break point + 1 single Data Memory break point
- 2 single Program Memory break points + 2 single Data Memory break points
- 2 single Program Memory break points + 1 Program Memory break point with mask ('range break point')
- 2 single Program Memory break points + 1 Data Memory break point with mask ('range break point')
- 1 single Frame Memory break point is available parallel to all the above combinations

A list of the On-Chip Debug specific JTAG instructions is given in "On-chip Debug Specific JTAG Instructions". Atmel supports the On-Chip Debug system with the AVR Studio front-end software for PCs. The details on hardware implementation and JTAG instructions are therefore irrelevant for the user of the On-Chip Debug system.

The JTAG Enable bit must be set (one) in the System Control Register to enable the JTAG Test Access Port. In addition, the On-chip Debug Enable bit must be set (one).

The AVR Studio enables the user to fully control execution of programs on an AVR device with On-Chip Debug capability, AVR In-Circuit Emulator, or the built-in AVR Instruction Set Simulator. AVR Studio supports source level execution of Assembly programs assembled with Atmel Corporation's AVR Assembler and C programs compiled with third-party vendors' compilers.

AVR Studio runs under Microsoft Windows® 95/98/2000 and Microsoft WindowsNT®.

All necessary execution commands are available in AVR Studio, both on source level and on disassembly level. The user can execute the program, single step through the code either by tracing into or stepping over functions, step out of functions, place the cursor on a statement and execute until the statement is reached, stop the execution, and reset the execution target. In addition, the user can have up to 2 data memory breakpoints, alternatively combined as a mask (range) break-point.

On-chip Debug Specific JTAG Instructions

The On-Chip debug support is considered being private JTAG instructions, and distributed within ATMEL and to selected third-party vendors only. Table 17 lists the instruction opcode.

Table 17. JTAG Instruction and Code

JTAG Instruction	4-bit Code	Selected Scan Chain	# Bits
EXTEST	$0 (0000)	AVR I/O Boundary	69
IDCODE	$1 (0001)	Device ID	32
SAMPLE_PRELOAD	$2 (0010)	AVR I/O Boundary	69
RESERVED	$3 (0011)	N/A	–
PRIVATE	$4 (0100)	FPSLIC On-chip Debug System	–
PRIVATE	$5 (0101)	FPSLIC On-chip Debug System	–
PRIVATE	$6 (0110)	FPSLIC On-chip Debug System	–
RESERVED	$7 (0111)	N/A	–
PRIVATE	$8 (1000)	FPSLIC On-chip Debug System	–
PRIVATE	$9 (1001)	FPSLIC On-chip Debug System	–
PRIVATE	$A (1010)	FPSLIC On-chip Debug System	–
PRIVATE	$B (1011)	FPSLIC On-chip Debug System	–
AVR_RESET	$C (1100)	AVR Reset	1
RESERVED	$D (1101)	N/A	–
RESERVED	$E (1110)	N/A	–
BYPASS	$F (1111)	Bypass	1

IEEE 1149.1 (JTAG) Boundary-scan

Features

- **JTAG (IEEE std. 1149.1 compliant) Interface**
- **Boundary-scan Capabilities According to the JTAG Standard**
- **Full Scan of All Port Functions**
- **Supports the Optional IDCODE Instruction**
- **Additional Public AVR_RESET Instruction to Reset the AVR**

System Overview

The Boundary-Scan chain has the capability of driving and observing the logic levels on the AVR's digital I/O pins. At system level, all ICs having JTAG capabilities are connected serially by the TDI/TDO signals to form a long shift register. An external controller sets up the devices to drive values at their output pins, and observe the input values received from other devices. The controller compares the received data with the expected result. In this way, Boundary-Scan provides a mechanism for testing interconnections and integrity of components on Printed Circuits Boards by using the 4 TAP signals only.

The four IEEE 1149.1 defined mandatory JTAG instructions IDCODE, BYPASS, SAMPLE/PRELOAD, and EXTEST, as well as the AVR specific public JTAG instruction AVR_RESET can be used for testing the Printed Circuit Board. Initial scanning of the data register path will show the ID-code of the device, since IDCODE is the default JTAG instruction. It may be desirable to have the AVR device in reset during test mode. If not reset, inputs to the device may be determined by the scan operations, and the internal software may be in an

undetermined state when exiting the test mode. If needed, the BYPASS instruction can be issued to make the shortest possible scan chain through the device. The AVR can be set in the reset state either by pulling the external $\overline{\text{AVR RESET}}$ pin Low, or issuing the AVR_RESET instruction with appropriate setting of the Reset Data Register.

The EXTEST instruction is used for sampling external pins and loading output pins with data. The data from the output latch will be driven out on the pins as soon as the EXTEST instruction is loaded into the JTAG IR-register. Therefore, the SAMPLE/PRELOAD should also be used for setting initial values to the scan ring, to avoid damaging the board when issuing the EXTEST instruction for the first time. SAMPLE/PRELOAD can also be used for taking a snapshot of the AVR's external pins during normal operation of the part.

The JTAG Enable bit must be programmed and the JTD bit in the I/O register MCUR must be cleared to enable the JTAG Test Access Port.

When using the JTAG interface for Boundary-Scan, using a JTAG TCK clock frequency higher than the internal chip frequency is possible. The chip clock is not required to run.

Data Registers

The Data Registers are selected by the JTAG instruction registers described in section "Boundary-scan Specific JTAG Instructions" on page 75. The data registers relevant for Boundary-Scan operations are:

- Bypass Register
- Device Identification Register
- AVR Reset Register
- AVR Boundary-Scan Chain

Bypass Register

The Bypass register consists of a single shift-register stage. When the Bypass register is selected as path between TDI and TDO, the register is reset to 0 when leaving the Capture-DR controller state. The Bypass register can be used to shorten the scan chain on a system when the other devices are to be tested.

Device Identification Register

Figure 41 shows the structure of the Device Identification register.

Figure 41. The format of the Device Identification Register

	MSB						LSB
Bit	31	28	27	12	11	1	0
Device ID	**Version**		**Part Number**		**Manufacturer ID**		**1**
	4 bits		16 bits		11 bits		1 bit

Version

Version is a 4-bit number identifying the revision of the component. The relevant version numbers are shown in Table 18.

Table 18. JTAG Part Version

Device	Version (Binary Digits)
AT94K05	–
AT94K10	0010
AT94K40	–

Part Number

The part number is a 16 bit code identifying the component. The JTAG Part Number for AVR devices is listed in Table 19.

Table 19. JTAG Part Number

Device	Part Number (Hex)
AT94K05	0xdd77
AT94K10	0xdd73
AT94K40	0xdd76

Manufacturer ID

The manufacturer ID for ATMEL is 0x01F (11 bits).

AVR Reset Register

The AVR Reset Register is a Test Data Register used to reset the AVR. A high value in the Reset Register corresponds to pulling the external AVRResetn Low. The AVR is reset as long as there is a high value present in the AVR Reset Register. Depending on the Bit settings for the clock options, the CPU will remain reset for a Reset Time-Out Period after releasing the AVR Reset Register. The output from this Data Register is not latched, so the reset will take place immediately, see Figure 42.

Figure 42. Reset Register

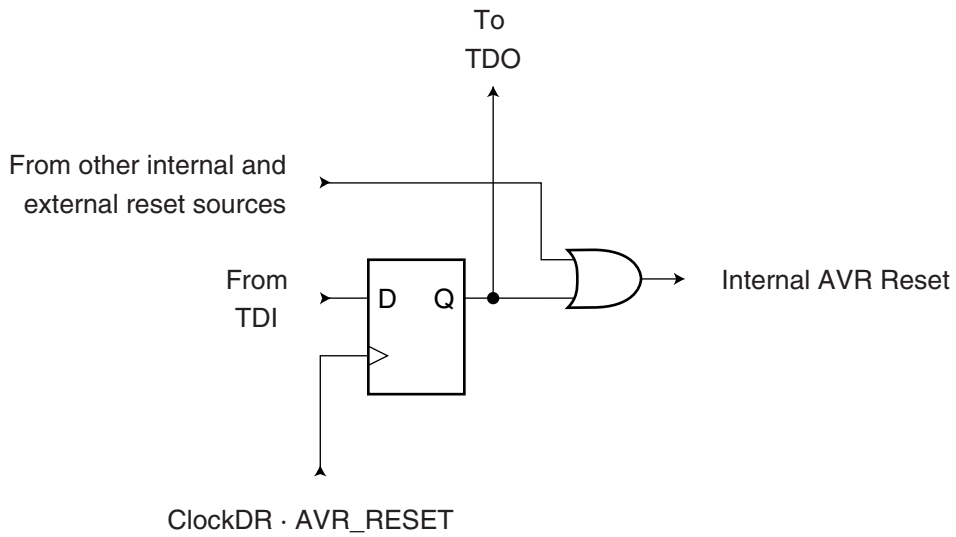

Boundary-scan Chain

The Boundary-scan Chain has the capability of driving and observing the logic levels on the AVR's digital I/O pins.

See "Boundary-scan Chain" on page 76 for a complete description.

Boundary-scan Specific JTAG Instructions

The instruction register is 4-bit wide, supporting up to 16 instructions. Listed below are the JTAG instructions useful for Boundary-Scan operation. Note that the optional HIGHZ instruction is not implemented.

As a definition in this data sheet, the LSB is shifted in and out first for all shift registers.

The OPCODE for each instruction is shown behind the instruction name in hex format. The text describes which data register is selected as path between TDI and TDO for each instruction.

EXTEST; $0

Mandatory JTAG instruction for selecting the Boundary-Scan Chain as Data Register for testing circuitry external to the AVR package. For port-pins, Pull-up Disable, Output Control, Output Data, and Input Data are all accessible in the scan chain. For Analog circuits having off-chip connections, the interface between the analog and the digital logic is in the scan chain. The contents of the latched outputs of the Boundary-Scan chain are driven out as soon as the JTAG IR-register is loaded by the EXTEST instruction.

The active states are:

- Capture-DR: Data on the external pins are sampled into the Boundary-Scan Chain.
- Shift-DR: The Internal Scan Chain is shifted by the TCK input.
- Update-DR: Data from the scan chain is applied to output pins.

IDCODE; $1

Optional JTAG instruction selecting the 32-bit ID register as Data Register. The ID register consists of a version number, a device number and the manufacturer code chosen by JEDEC. This is the default instruction after power-up.

The active states are:

- Capture-DR: Data in the IDCODE register is sampled into the Boundary-Scan Chain.
- Shift-DR: The IDCODE scan chain is shifted by the TCK input.

SAMPLE_PRELOAD; $2

Mandatory JTAG instruction for pre-loading the output latches and taking a snap-shot of the input/output pins without affecting the system operation. However, the output latches are not connected to the pins. The Boundary-Scan Chain is selected as Data Register.

The active states are:

- Capture-DR: Data on the external pins are sampled into the Boundary-Scan Chain.
- Shift-DR: The Boundary-Scan Chain is shifted by the TCK input.
- Update-DR: Data from the Boundary-Scan chain is applied to the output latches. However, the output latches are not connected to the pins.

AVR_RESET; $C

The AVR specific public JTAG instruction for forcing the AVR device into the Reset Mode or releasing the JTAG reset source. The TAP controller is not reset by this instruction. The one bit Reset Register is selected as Data Register. Note that the reset will be active as long as there is a logic “1” in the Reset Chain. The output from this chain is not latched.

The active state is:

- Shift-DR: The Reset Register is shifted by the TCK input.

BYPASS; $F

Mandatory JTAG instruction selecting the Bypass Register for Data Register.

The active states are:

- Capture-DR: Loads a logic “0” into the Bypass Register.
- Shift-DR: The Bypass Register cell between TDI and TDO is shifted.

Boundary-scan Chain

The Boundary-Scan chain has the capability of driving and observing the logic levels on the AVR’s digital I/O pins.

Scanning the Digital Port Pins

Figure 43 shows the boundary-scan cell for bi-directional port pins with pull-up function. The cell consists of a standard boundary-scan cell for the pull-up function, and a bi-directional pin cell that combines the three signals Output Control (OC), Output Data (OD), and Input Data (ID), into only a two-stage shift register.

Figure 43. Boundary-scan Cell For Bi-directional Port Pin with Pull-up Function

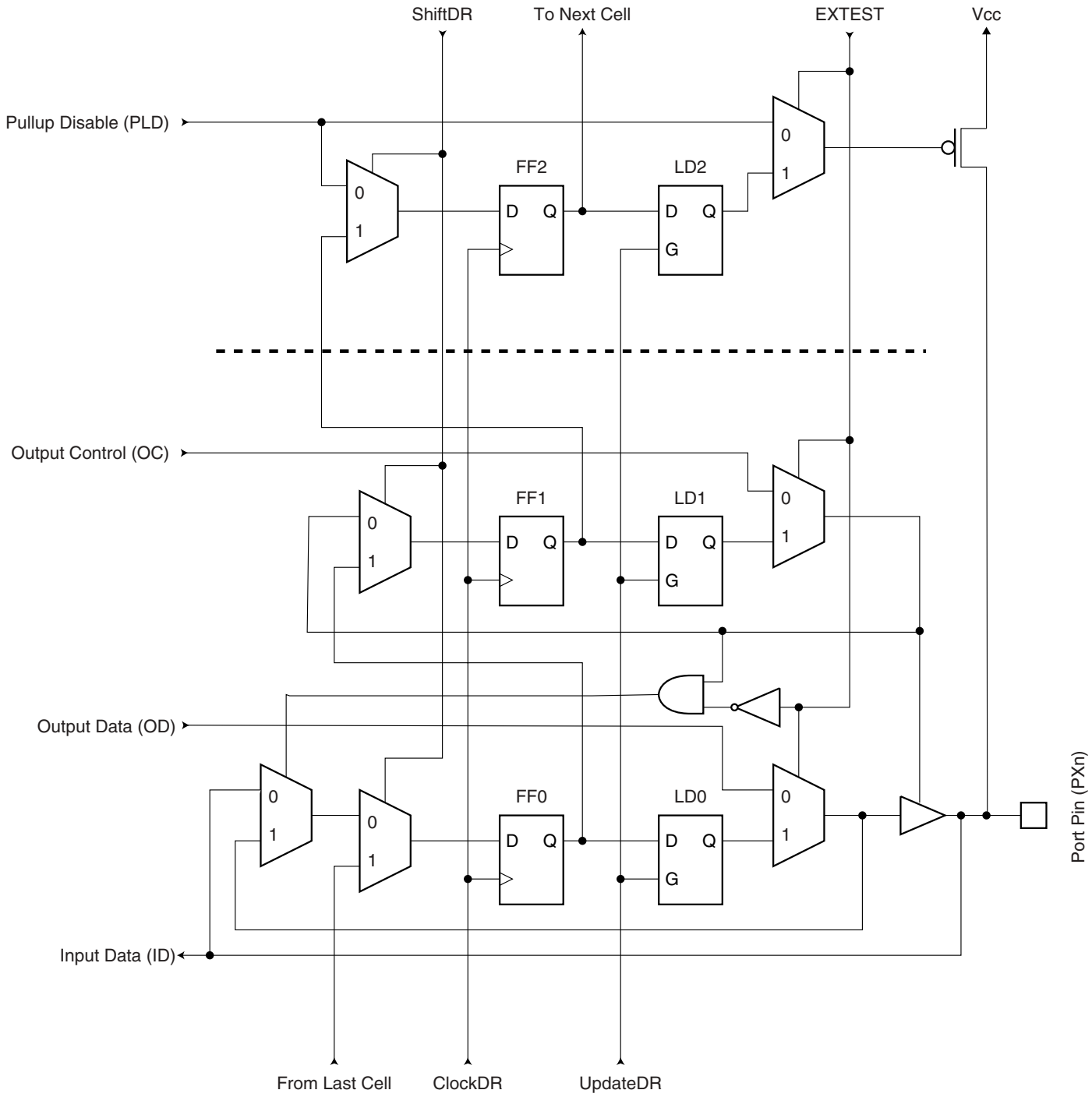

Figure 44 shows a simple digital Port Pin as described in the section “I/O Ports” on page 147. The Boundary-Scan details from Figure 43 replaces the dashed box in Figure 44.

Figure 44. General Port Pin Schematic Diagram

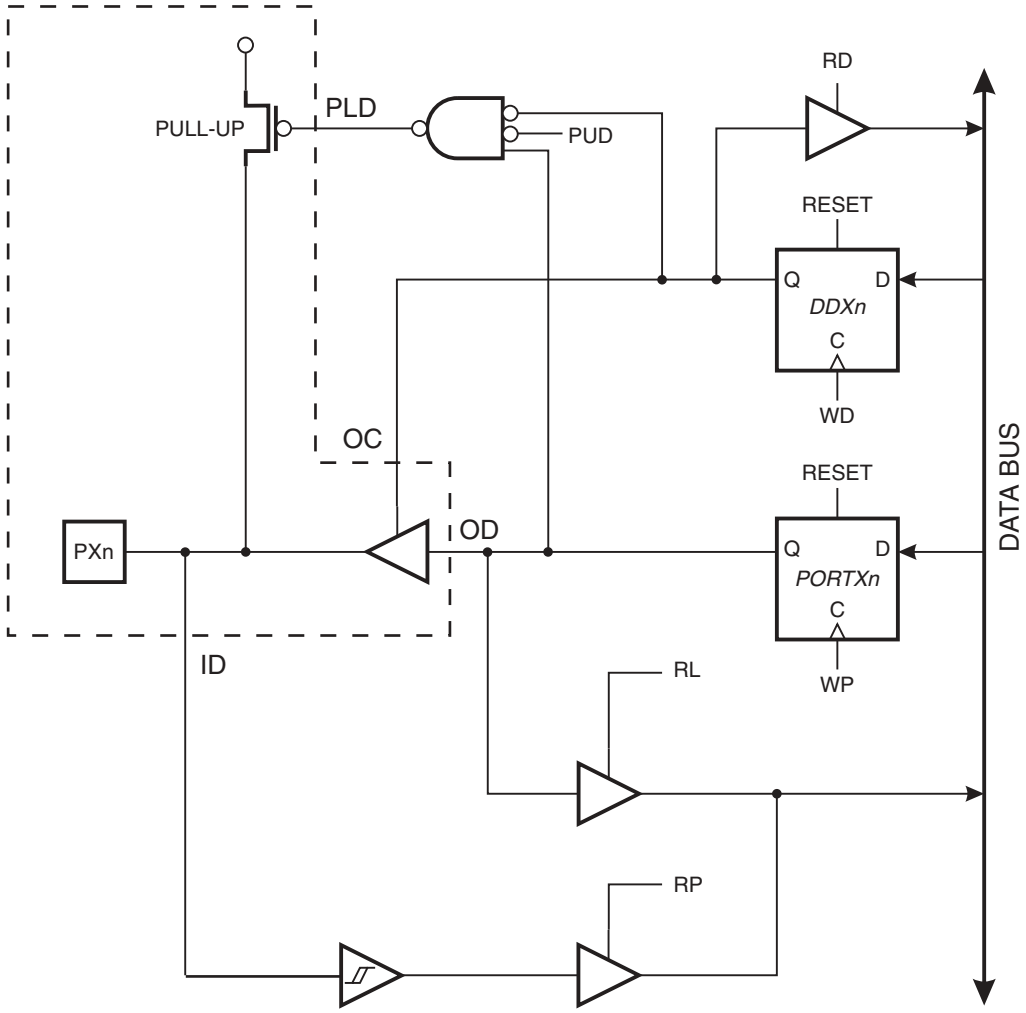

WP: WRITE PORTX
WD: WRITE DDRX
RL: READ PORTX LATCH
RP: READ PORTX PIN
RD: READ DDRX
n: 0-7
PUD: PULL-UP DISABLE
PuD: JTAG PULL-UP DISABLE
OC: JTAG OUTPUT CONTROL
OD: JTAG OUTPUT DATA
ID: JTAG INPUT DATA

When no alternate port function is present, the Input Data - ID corresponds to the PINn register value, Output Data corresponds to the PORTn register, Output Control corresponds to the Data Direction (DDn) register, and the PuLL-up Disable (PLD) corresponds to logic expression (DDn OR NOT(PORTBn)).

Digital alternate port functions are connected outside the dashed box in Figure 44 to make the scan chain read the actual pin value.

Scanning AVR RESET

Multiple sources contribute to the internal AVR reset; therefore, the AVR reset pin is not observed. Instead, the internal AVR reset signal output from the Reset Control Unit is observed, see Figure 45. The scanned signal is active High if AVRResetn is Low and enabled or the device is in general reset (Resetn or power-on) or configuration download.

Figure 45. Observe-only Cell

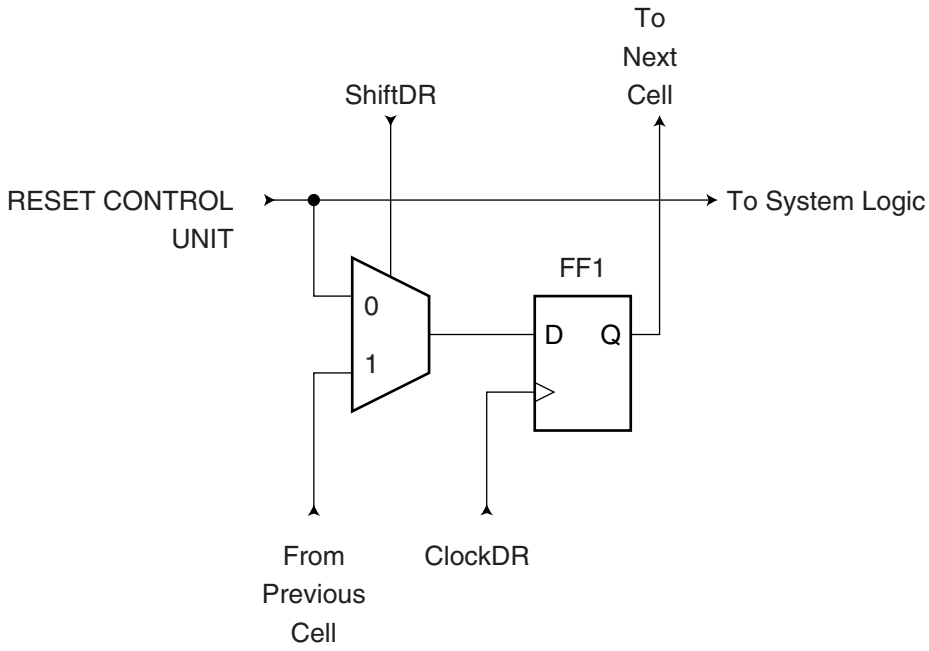

Scanning 2-wire Serial

The SCL and SDA pins are open drain, bi-directional and enabled separately. The “Enable Output” bits (active High) in the scan chain are supported by general boundary-scan cells. Enabling the output will drive the pin Low from a tri-state. External pull-ups on the 2-wire bus are required to pull the pins High if the output is disabled. The “Data Out/In” and “Clock Out/In” bits in the scan chain are observe-only cells. Figure 46 shows how each pin is connected in the scan chain.

Figure 46. Boundary-scan Cells for 2-wire Serial

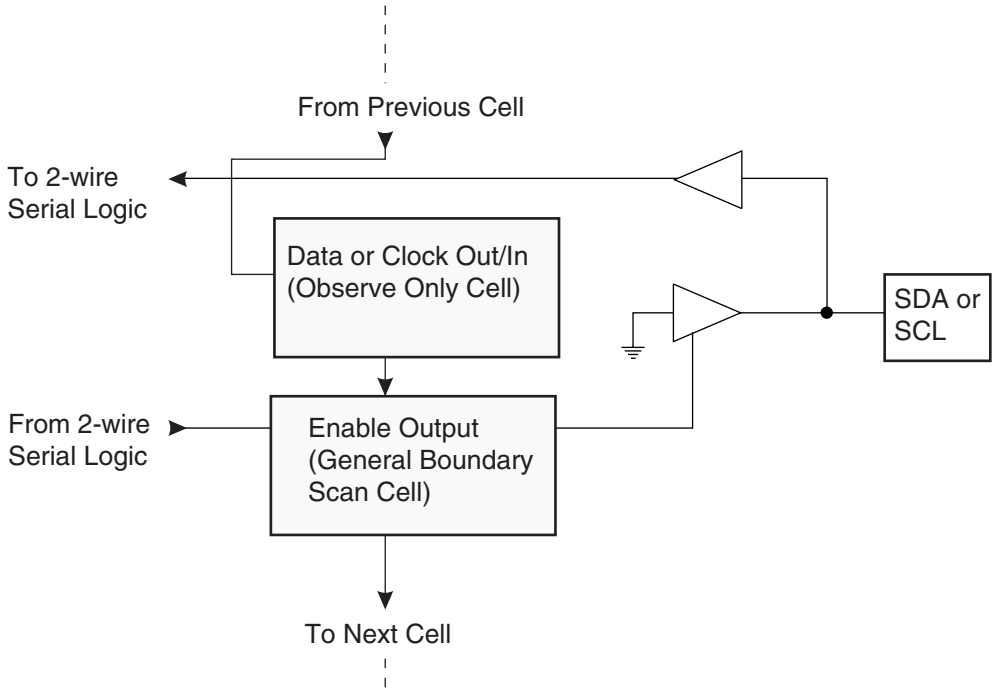

Scanning the Clock Pins

Figure 47 shows how each oscillator with external connection is supported in the scan chain. The Enable signal is supported with a general boundary-scan cell, while the oscillator/clock output is attached to an observe-only cell. In addition to the main clock, the timer oscillator is scanned in the same way. The output from the internal RC-Oscillator is not scanned, as this oscillator does not have external connections.

Figure 47. Boundary-scan Cells for Oscillators and Clock Options

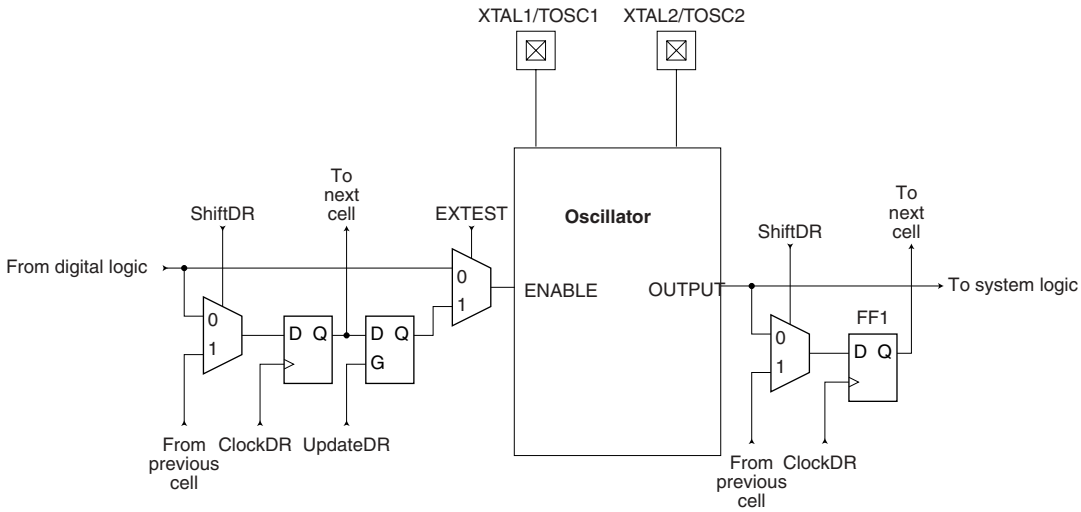

Scanning an oscillator output gives unpredictable results as there is a frequency drift between the internal oscillator and the JTAG TCK clock.

The clock configuration is programmed in the SCR. As an SCR bit is not changed run-time, the clock configuration is considered fixed for a given application. The user is advised to scan the same clock option as to be used in the final system. The enable signals are supported in the scan chain because the system logic can disable clock options in sleep modes, thereby disconnecting the oscillator pins from the scan path if not provided.

The XTAL or TOSC “Clock In” Scan chain bit will always capture “1” if the oscillator is disabled (“Enable Clock” bit is active Low).

FPSLIC Boundary-scan Order

Table 20 shows the Scan order between TDI and TDO when the Boundary-Scan chain is selected as data path. Bit 0 is the LSB; the first bit scanned in, and the first bit scanned out. In Figure 43, “Data Out/In – PXn” corresponds to FF0, “Enable Output – PXn” corresponds to FF1, and “Pull-up – PXn” corresponds to FF2.

Table 20. AVR I/O Boundary Scan – JTAG Instructions $0/$2

I/O Ports	Description	Bit	
PORTE	Data Out/In - PE7	68	<- TDI
	Enable Output - PE7	67	
	Pull-up - PE7	66	
	Data Out/In - PE6	65	
	Enable Output - PE6	64	
	Pull-up - PE6	63	
	Data Out/In - PE5	62	
	Enable Output - PE5	61	
	Pull-up - PE5	60	
	Data Out/In - PE4	59	
	Enable Output - PE4	58	
	Pull-up - PE4	57	
	Data Out/In - PE3	56	
	Enable Output - PE3	55	
	Pull-up - PE3	54	
	Data Out/In - PE2	53	
	Enable Output - PE2	52	
	Pull-up - PE2	51	
	Data Out/In - PE1	50	
	Enable Output - PE1	49	
	Pull-up - PE1	48	
	Data Out/In - PE0	47	
	Enable Output - PE0	46	
	Pull-up - PE0	45	

Table 20. AVR I/O Boundary Scan – JTAG Instructions $0/$2

I/O Ports	Description	Bit
PORTD	Data Out/In - PD7	44
	Enable Output - PD7	43
	Pull-up - PD7	42
	Data Out/In - PD6	41
	Enable Output - PD6	40
	Pull-up - PD6	39
	Data Out/In - PD5	38
	Enable Output - PD5	37
	Pull-up - PD5	36
	Data Out/In - PD4	35
	Enable Output - PD4	34
	Pull-up - PD4	33
	Data Out/In - PD3	32
	Enable Output - PD3	31
	Pull-up - PD3	30
	Data Out/In - PD2	29
	Enable Output - PD2	28
	Pull-up - PD2	27
	Data Out/In - PD1	26
	Enable Output - PD1	25
	Pull-up - PD1	24
	Data Out/In - PD0	23
	Enable Output - PD0	22
	Pull-up - PD0	21
EXT. INTERRUPTS	Input with Pull-up - INTP3	20(1)
	Input with Pull-up - INTP2	19(1)
	Input with Pull-up - INTP1	18(1)
	Input with Pull-up - INTP0	17(1)
UART1	Data Out/In - TX1	16
	Enable Output - TX1	15
	Pull-up - TX1	14
	Input with Pull-up - RX1	13(1)
UART0	Data Out/In - TX0	12
	Enable Output - TX0	11
	Pull-up - TX0	10
	Input with Pull-up - RX0	9(1)

Table 20. AVR I/O Boundary Scan – JTAG Instructions $0/$2

I/O Ports	Description	Bit	
XTAL	Clock In - XTAL1	8[1]	
	Enable Clock - XTAL 1	7	
TOSC	Clock In - TOSC 1	6[1]	
	Enable Clock - TOSC 1	5	
2-wire Serial	Data Out/In - SDA	4[1]	
	Enable Output - SDA	3	
	Clock Out/In - SCL	2[1]	
	Enable Output - SCL	1	
[2]	AVR Reset	0[1]	-> TDO

Notes: 1. Observe-only scan cell.
2. AVR Reset is High (one) if AVRResetn activated (Low) and enabled or the device is in general reset (Resetn or power-on) or configuration download.

Table 21. Bit EXTEST and SAMPLE_PRELOAD

Bit Type	EXTEST	SAMPLE_PRELOAD
Data Out/In - PXn	**Defines value driven if enabled**. Capture-DR grabs signal on pad.	Capture-DR grabs signal from pad if output disabled, or from the AVR if the output drive is enabled.
Enable Output - PXn	**1 = output drive enabled**. Capture-DR grabs output enable scan latch.	Capture-DR grabs output enable from the AVR.
Pull-up - PXn	**1 = pull-up disabled**. Capture-DR grabs pull-up control from the AVR.	Capture-DR grabs pull-up control from the AVR.
Input with Pull-up - INTPn	**Observe only**. Capture-DR grabs signal from pad.	Capture-DR grabs signal from pad.
Data Out - TXn	**Defines value driven if enabled**. Capture-DR grabs signal on pad.	Capture-DR always grabs “0” since Tx input is NC and tied to ground internally.
Enable Output - TXn	**1 = output drive enabled**. Capture-DR grabs output enable scan latch.	Capture-DR grabs output enable from the AVR.
Pull-up - TXn	**1 = pull-up disabled**. Capture-DR grabs pull-up control from the AVR.	Capture-DR grabs pull-up control from the AVR.
Input with Pull-up - RXn	**Observe only**. Capture-DR grabs signal from pad.	Capture-DR grabs signal from pad.
Clock In - XTAL1	**Observe only**. Capture-DR grabs signal from pad.	Capture-DR grabs signal from pad if clock is enabled, “1” if disabled.
Enable Clock - XTAL 1	**1 = clock disabled**. Capture-DR grabs clock enable from the AVR.	Capture-DR grabs enable from the AVR.

Table 21. Bit EXTEST and SAMPLE_PRELOAD

Bit Type	EXTEST	SAMPLE_PRELOAD
Clock In - TOSC 1	**Observe only**. Capture-DR grabs signal from pad.	Capture-DR grabs signal from pad if clock is enabled, “1” if disabled.
Enable Clock - TOSC 1	**1 = clock disabled**. Capture-DR grabs clock enable from the AVR.	Capture-DR grabs enable from the AVR.
Data Out/In - SDA	**Observe only**. Capture-DR grabs signal from pad.	Capture-DR grabs signal from pad.
Enable Output - SDA	**1 = drive “0”** **0 = drive disabled, bus pull-up** Capture-DR grabs output enable scan latch.	Capture-DR grabs output enable from the AVR.
Clock Out/In - SCL	**Observe only**. Capture-DR grabs signal from pad.	Capture-DR grabs signal from pad.
Enable Output - SCL	**1 = drive “0”** **0 = drive disabled, bus pull-up** Capture-DR grabs output enable scan latch.	Capture-DR grabs output enable from the AVR.
AVR Reset	**Internal, observe only.** Capture-DR grabs internal AVR reset signal.	Capture-DR grabs internal AVR reset signal.

Boundary-scan Description Language Files

Boundary-Scan Description Language (BSDL) files describe Boundary-Scan capable devices in a standard format used by automated test-generation software. The order and function of bits in the Boundary-Scan data register are included in this description. A BSDL file for AT94K Family is available.

Timer/Counters

The FPSLIC provides three general-purpose Timer/Counters: two 8-bit T/Cs and one 16-bit T/C. Timer/Counter2 can optionally be asynchronously clocked from an external oscillator. This oscillator is optimized for use with a 32.768 kHz watch crystal, enabling use of Timer/Counter2 as a Real-time Clock (RTC). Timer/Counters 0 and 1 have individual prescaling selection from the same 10-bit prescaling timer. Timer/Counter2 has its own prescaler. Both these prescalers can be reset by setting the corresponding control bits in the Special Functions I/O Register (SFIOR). See “Special Function I/O Register – SFIOR” on page 86 for a detailed description. These Timer/Counters can either be used as a timer with an internal clock time-base or as a counter with an external pin connection which triggers the counting.

Timer/Counter Prescalers

For Timer/Counters 0 and 1, see Figure 48, the four prescaled selections are: CK/8, CK/64, CK/256 and CK/1024, where CK is the oscillator clock. For the two Timer/Counters 0 and 1, CK, external source, and stop, can also be selected as clock sources. Setting the PSR10 bit in SFIOR resets the prescaler. This allows the user to operate with a predictable prescaler. Note that Timer/Counter1 and Timer/Counter0 share the same prescaler and a prescaler reset will affect both Timer/Counters.

Figure 48. Prescaler for Timer/Counter0 and 1

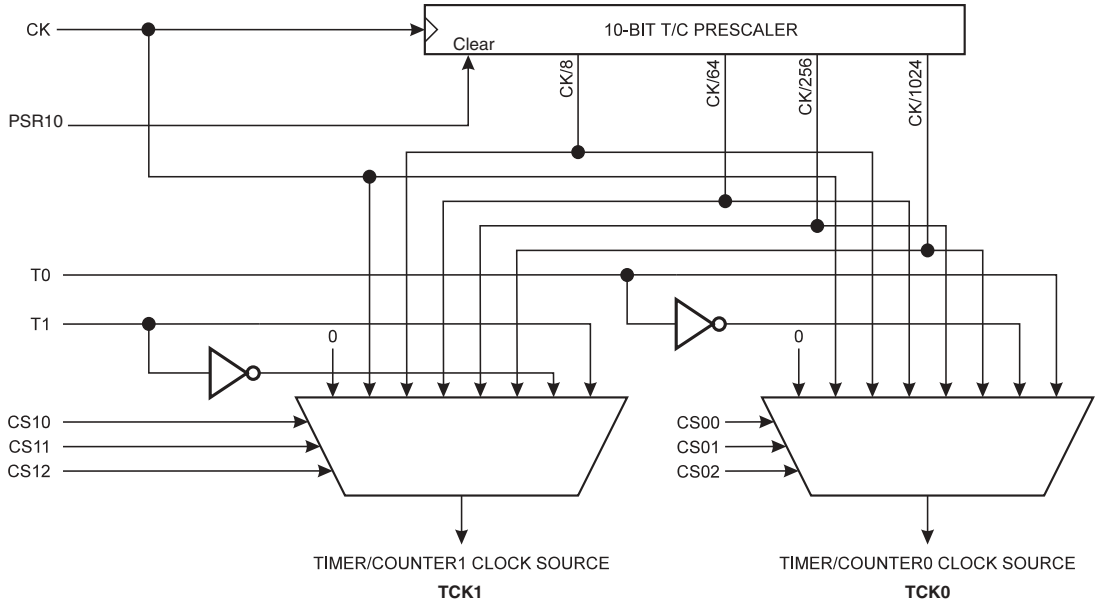

The clock source for Timer/Counter2 prescaler, see Figure 49, is named PCK2. PCK2 is by default connected to the main system clock CK. By setting the AS2 bit in ASSR, Timer/Counter2 is asynchronously clocked from the TOSC1 pin. This enables use of Timer/Counter2 as a Real-time Clock (RTC). When AS2 is set, pins TOSC1 and TOSC2 are disconnected from Port D. A crystal can then be connected between the TOSC1 and TOSC2 pins to serve as an independent clock source for Timer/Counter2. The oscillator is optimized for use with a 32.768 kHz crystal. Alternatively, an external clock signal can be applied to TOSC1. The frequency of this clock must be lower than one fourth of the CPU clock and not higher than 1 MHz. Setting the PSR2 bit in SFIOR resets the prescaler. This allows the user to operate with a predictable prescaler.

Figure 49. Timer/Counter2 Prescaler

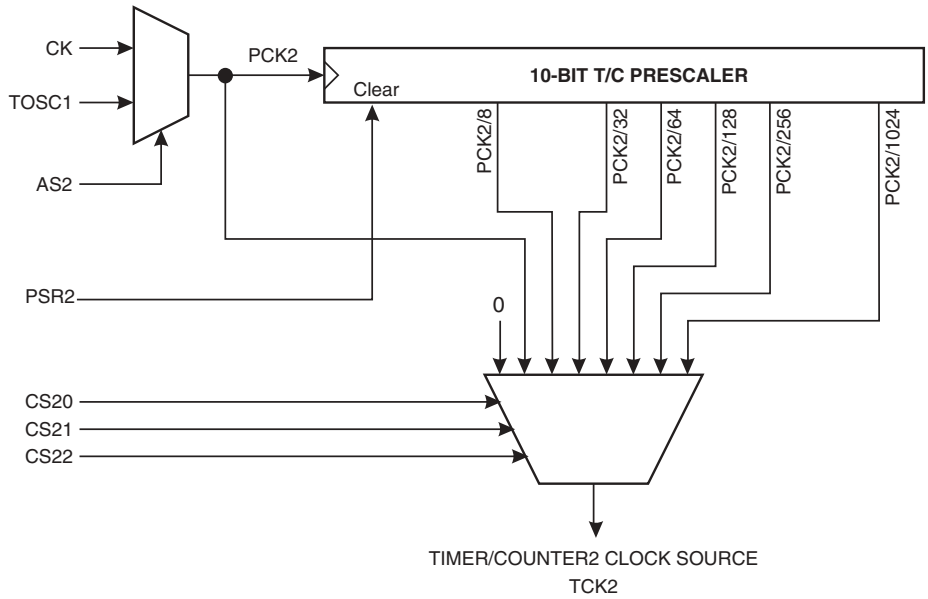

Special Function I/O Register – SFIOR

Bit	7	6	5	4	3	2	1	0	
$30 ($50)	-	-	-	-	-	-	PSR2	PSR10	SFIOR
Read/Write	R	R	R	R	R	R	R/W	R/W	
Initial Value	0	0	0	0	0	0	0	0	

- **Bits 7..2 - Res: Reserved Bits**

These bits are reserved bits in the FPSLIC and are always read as zero.

- **Bit 1 - PSR2: Prescaler Reset Timer/Counter2**

When this bit is set (one) the Timer/Counter2 prescaler will be reset. The bit will be cleared by the hardware after the operation is performed. Writing a zero to this bit will have no effect. This bit will always be read as zero if Timer/Counter2 is clocked by the internal CPU clock. If this bit is written when Timer/Counter2 is operating in asynchronous mode; however, the bit will remain as one until the prescaler has been reset. See “Asynchronous Operation of Timer/Counter2” on page 94 for a detailed description of asynchronous operation.

- **Bit 0 - PSR10: Prescaler Reset Timer/Counter1 and Timer/Counter0**

When this bit is set (one) the Timer/Counter1 and Timer/Counter0 prescaler will be reset. The bit will be cleared by the hardware after the operation is performed. Writing a zero to this bit will have no effect. Note that Timer/Counter1 and Timer/Counter0 share the same prescaler and a reset of this prescaler will affect both timers. This bit will always be read as zero.

8-bit Timers/Counters T/C0 and T/C2

Figure 50 shows the block diagram for Timer/Counter0. Figure 51 shows the block diagram for Timer/Counter2.

Figure 50. Timer/Counter0 Block Diagram

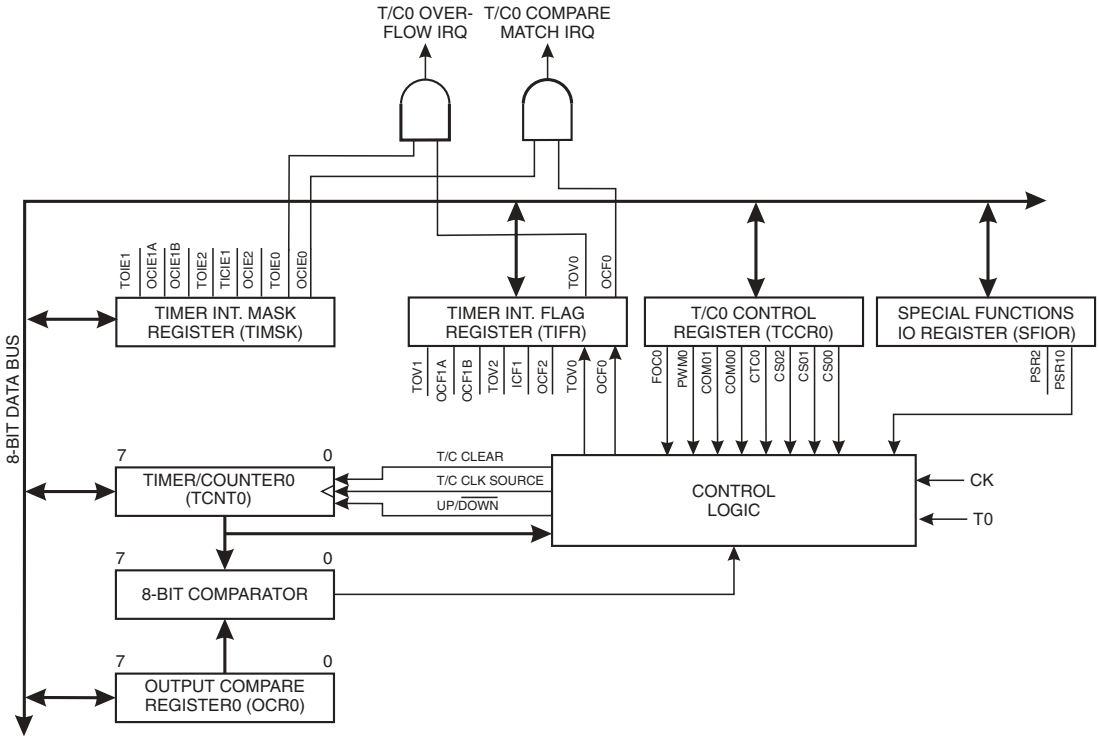

Figure 51. Timer/Counter2 Block Diagram

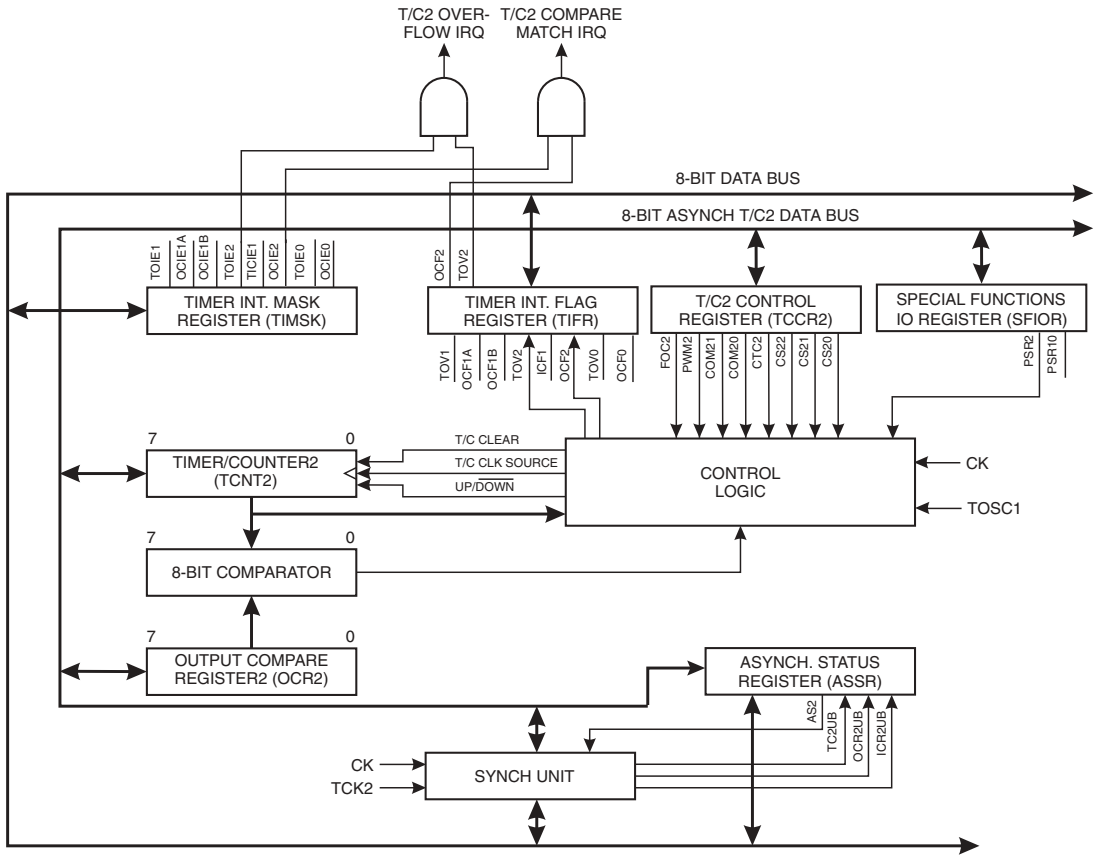

The 8-bit Timer/Counter0 can select the clock source from CK, prescaled CK, or an external pin.

The 8-bit Timer/Counter2 can select the clock source from CK, prescaled CK or external TOSC1.

Both Timers/Counters can be stopped as described in section “Timer/Counter0 Control Register – TCCR0” on page 88 and “Timer/Counter2 Control Register – TCCR2” on page 88.

The various status flags (overflow and compare match) are found in the Timer/Counter Interrupt Flag Register (TIFR). Control signals are found in the Timer/Counter Control Register (TCCR0 and TCCR2). The interrupt enable/disable settings are found in the Timer/Counter Interrupt Mask Register – TIMSK.

When Timer/Counter0 is externally clocked, the external signal is synchronized with the oscillator frequency of the CPU. To assure proper sampling of the external clock, the minimum time between two external clock transitions must be at least one internal CPU clock period. The external clock signal is sampled on the rising edge of the internal CPU clock.

The 8-bit Timer/Counters feature both a high-resolution and a high-accuracy usage with the lower prescaling opportunities. Similarly, the high prescaling opportunities make the Timer/Counter0 useful for lower speed functions or exact-timing functions with infrequent actions.

Timer/Counters 0 and 2 can also be used as 8-bit Pulse Width Modulators (PWM). In this mode, the Timer/Counter and the output compare register serve as a glitch-free, stand-alone PWM with centered pulses. See “Timer/Counter 0 and 2 in PWM Mode” on page 91 for a detailed description on this function.

Timer/Counter0 Control Register – TCCR0

Bit	7	6	5	4	3	2	1	0	
$33 ($53)	**FOC0**	**PWM0**	**COM01**	**COM00**	**CTC0**	**CS02**	**CS01**	**CS00**	**TCCR0**
Read/Write	R/W	R/W	R/W	R/W	R/W	R/W	R/W	R/W	
Initial Value	0	0	0	0	0	0	0	0	

Timer/Counter2 Control Register – TCCR2

Bit	7	6	5	4	3	2	1	0	
$27 ($47)	**FOC2**	**PWM2**	**COM21**	**COM20**	**CTC2**	**CS22**	**CS21**	**CS20**	**TCCR2**
Read/Write	R/W	R/W	R/W	R/W	R/W	R/W	R/W	R/W	
Initial Value	0	0	0	0	0	0	0	0	

- **Bit 7 - FOC0/FOC2: Force Output Compare**

Writing a logic 1 to this bit forces a change in the compare match output pin PE1 (Timer/Counter0) and PE3 (Timer/Counter2) according to the values already set in COMn1 and COMn0. If the COMn1 and COMn0 bits are written in the same cycle as FOC0/FOC2, the new settings will not take effect until next compare match or Forced Output Compare match occurs. The Force Output Compare bit can be used to change the output pin without waiting for a compare match in the timer. The automatic action programmed in COMn1 and COMn0 happens as if a Compare Match had occurred, but no interrupt is generated and the Timer/Counters will not be cleared even if CTC0/CTC2 is set. The FOC0/FOC2 bits will always be read as zero. The setting of the FOC0/FOC2 bits has no effect in PWM mode.

- **Bit 6 - PWM0/PWM2: Pulse Width Modulator Enable**

When set (one) this bit enables PWM mode for Timer/Counter0 or Timer/Counter2. This mode is described on page 91.

- **Bits 5,4 - COM01, COM00/COM21, COM20: Compare Output Mode, Bits 1 and 0**

The COMn1 and COMn0 control bits determine any output pin action following a compare match in Timer/Counter0 or Timer/Counter2. Output pin actions affect pins PE1(OC0) or PE3(OC2). This is an alternative function to an I/O port, and the corresponding direction control bit must be set (one) to control an output pin. The control configuration is shown in Table 22.

Table 22. Compare Output Mode Select[1]

COMn1	COMn0	Description
0	0	Timer/Counter disconnected from output pin OCn[2]
0	1	Toggles the OCn[2] output line.
1	0	Clears the OCn[2] output line (to zero).
1	1	Sets the OCn[2] output line (to one).

Notes: 1. In PWM mode, these bits have a different function. Refer to Table 25 for a detailed description.
2. n = 0 or 2

- **Bit 3 - CTC0/CTC2: Clear Timer/Counter on Compare Match**

When the CTC0 or CTC2 control bit is set (one), Timer/Counter0 or Timer/Counter2 is reset to $00 in the CPU clock-cycle after a compare match. If the control bit is cleared, Timer/Counter continues counting and is unaffected by a compare match. When a prescaling of 1 is used, and the compare register is set to C, the timer will count as follows if CTC0/CTC2 is set:

... | C-1 | C | 0 | 1 | ...

When the prescaler is set to divide by 8, the timer will count like this:

... | C-1, C-1, C-1, C-1, C-1, C-1, C-1, C-1 | C, C, C, C, C, C, C, C | 0, 0, 0, 0, 0, 0, 0, 0 | 1, 1, 1, ...

In PWM mode, this bit has a different function. If the CTC0 or CTC2 bit is cleared in PWM mode, the Timer/Counter acts as an up/down counter. If the CTC0 or CTC2 bit is set (one), the Timer/Counter wraps when it reaches $FF. Refer to page 91 for a detailed description.

- **Bits 2,1,0 - CS02, CS01, CS00/ CS22, CS21, CS20: Clock Select Bits 2,1 and 0**

The Clock Select bits 2,1 and 0 define the prescaling source of Timer/Counter0 and Timer/Counter2, see Table 23 and Table 24.

Table 23. Clock 0 Prescale Select

CS02	CS01	CS00	Description
0	0	0	Stop, the Timer/Counter0 is stopped
0	0	1	CK
0	1	0	CK/8
0	1	1	CK/64
1	0	0	CK/256
1	0	1	CK/1024
1	1	0	External pin PE0(T0), falling edge
1	1	1	External pin PE0(T0), rising edge

Table 24. Clock 2 Prescale Select

CS22	CS21	CS20	Description
0	0	0	Stop, the Timer/Counter2 is stopped
0	0	1	PCK2
0	1	0	PCK2/8
0	1	1	PCK2/32
1	0	0	PCK2/64
1	0	1	PCK2/128
1	1	0	PCK2/256
1	1	1	PCK2/1024

The Stop condition provides a Timer Enable/Disable function. The prescaled modes are scaled directly from the CK oscillator clock for Timer/Counter0 and PCK2 for Timer/Counter2. If the external pin modes are used for Timer/Counter0, transitions on PE0/(T0) will clock the counter even if the pin is configured as an output. This feature can give the user SW control of the counting.

Timer Counter0 – TCNT0

Bit	7	6	5	4	3	2	1	0	
$32 ($52)	MSB							LSB	TCNT0
Read/Write	R/W	R/W	R/W	R/W	R/W	R/W	R/W	R/W	
Initial Value	0	0	0	0	0	0	0	0	

Timer/Counter2 – TCNT2

Bit	7	6	5	4	3	2	1	0	
$23 ($43)	MSB							LSB	TCNT2
Read/Write	R/W	R/W	R/W	R/W	R/W	R/W	R/W	R/W	
Initial Value	0	0	0	0	0	0	0	0	

These 8-bit registers contain the value of the Timer/Counters.

Both Timer/Counters are realized as up or up/down (in PWM mode) counters with read and write access. If the Timer/Counter is written to and a clock source is selected, it continues counting in the timer clock cycle following the write operation.

Timer/Counter0 Output Compare Register – OCR0

Bit	7	6	5	4	3	2	1	0	
$31 ($51)	MSB							LSB	OCR0
Read/Write	R/W	R/W	R/W	R/W	R/W	R/W	R/W	R/W	
Initial Value	0	0	0	0	0	0	0	0	

Timer/Counter2 Output Compare Register – OCR2

Bit	7	6	5	4	3	2	1	0	
$22 ($42)	MSB							LSB	OCR2
Read/Write	R/W	R/W	R/W	R/W	R/W	R/W	R/W	R/W	
Initial Value	0	0	0	0	0	0	0	0	

The output compare registers are 8-bit read/write registers. The Timer/Counter Output Compare Registers contains the data to be continuously compared with the Timer/Counter. Actions on compare matches are specified in TCCR0 and TCCR2. A compare match does only occur if the Timer/Counter counts to the OCR value. A software write that sets Timer/Counter and Output Compare Register to the same value does not generate a compare match.

A compare match will set the compare interrupt flag in the CPU clock-cycle following the compare event.

Timer/Counter 0 and 2 in PWM Mode

When PWM mode is selected, the Timer/Counter either wraps (overflows) when it reaches $FF or it acts as an up/down counter.

If the up/down mode is selected, the Timer/Counter and the Output Compare Registers – OCR0 or OCR2 form an 8-bit, free-running, glitch-free and phase correct PWM with outputs on the PE1(OC0/PWM0) or PE3(OC2/PWM2) pin.

If the overflow mode is selected, the Timer/Counter and the Output Compare Registers – OCR0 or OCR2 form an 8-bit, free-running and glitch-free PWM, operating with twice the speed of the up/down counting mode.

PWM Modes (Up/Down and Overflow)

The two different PWM modes are selected by the CTC0 or CTC2 bit in the Timer/Counter Control Registers – TCCR0 or TCCR2 respectively.

If CTC0/CTC2 is cleared and PWM mode is selected, the Timer/Counter acts as an up/down counter, counting up from $00 to $FF, where it turns and counts down again to zero before the cycle is repeated. When the counter value matches the contents of the Output Compare Register, the PE1(OC0/PWM0) or PE3(OC2/PWM2) pin is set or cleared according to the settings of the COMn1/COMn0 bits in the Timer/Counter Control Registers TCCR0 or TCCR2.

If CTC0/CTC2 is set and PWM mode is selected, the Timer/Counters will wrap and start counting from $00 after reaching $FF. The PE1(OC0/PWM0) or PE3(OC2/PWM2) pin will be set or cleared according to the settings of COMn1/COMn0 on a Timer/Counter overflow or when the counter value matches the contents of the Output Compare Register. Refer to Table 25 for details.

Table 25. Compare Mode Select in PWM Mode

CTCn(1)	COMn1(1)	COMn0(1)	Effect on Compare Pin	Frequency
x(2)	0	x(2)	Not connected	–
0	1	1	Cleared on compare match, up-counting. Set on compare match, down-counting (non-inverted PWM)	$f_{TCK0/2}/510$
0	1	1	Cleared on compare match, down-counting. Set on compare match, up-counting (inverted PWM)	$f_{TCK0/2}/510$
1	1	0	Cleared on compare match, set on overflow	$f_{TCK0/2}/256$
1	1	1	Set on compare match, set on overflow	$f_{TCK0/2}/256$

Notes: 1. n = 0 or 2
2. x = don’ t care

In PWM mode, the value to be written to the Output Compare Register is first transferred to a temporary location, and then latched into the OCR when the Timer/Counter reaches $FF. This prevents the occurrence of odd-length PWM pulses (glitches) in the event of an unsynchronized OCR0 or OCR2 write. See Figure 52 and Figure 53 for examples.

Figure 52. Effects of Unsynchronized OCR Latching in Up/Down Mode

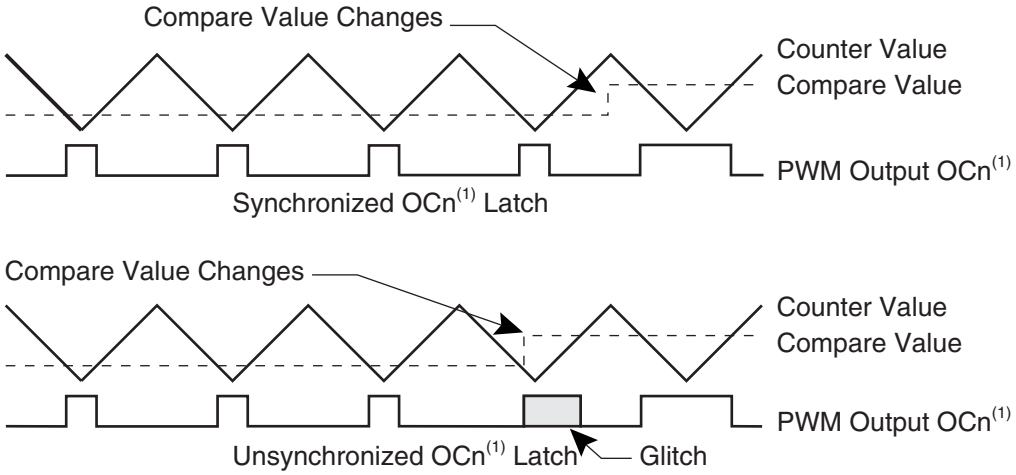

Note: 1. n = 0 or 2

Figure 53. Effects of Unsynchronized OCR Latching in Overflow Mode.

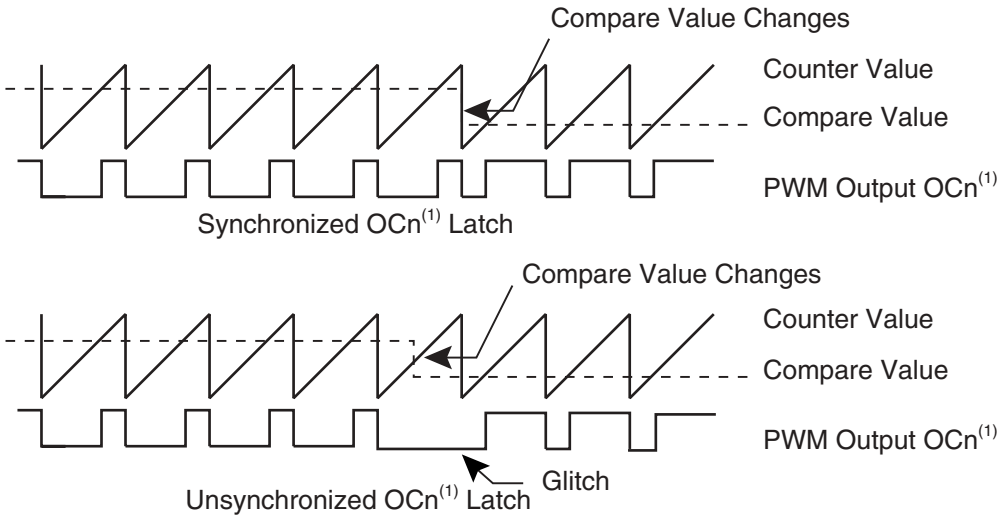

Note: 1. n = 0 or 2

During the time between the write and the latch operation, a read from the Output Compare Registers will read the contents of the temporary location. This means that the most recently written value always will read out of OCR0 and OCR2.

When the Output Compare Register contains $00 or $FF, and the up/down PWM mode is selected, the output PE1(OC0/PWM0)/PE3(OC2/PWM2) is updated to Low or High on the next compare match according to the settings of COMn1/COMn0. This is shown in Table 26. In overflow PWM mode, the output PE1(OC0/PWM0)/PE3(OC2/PWM2) is held Low or High only when the Output Compare Register contains $FF.

Table 26. PWM Outputs OCRn = $00 or $FF[1]

COMn1[2]	COMn0[2]	OCRn[2]	Output PWMn[2]
1	0	$00	L
1	0	$FF	H
1	1	$00	H
1	1	$FF	L

Notes: 1. n overflow PWM mode, this table is only valid for OCRn = $FF
2. n = 0 or 2

In up/down PWM mode, the Timer Overflow Flag, TOV0 or TOV2, is set when the counter advances from $00. In overflow PWM mode, the Timer Overflow Flag is set as in normal Timer/Counter mode. Timer Overflow Interrupts 0 and 2 operate exactly as in normal Timer/Counter mode, i.e. they are executed when TOV0 or TOV2 are set provided that Timer Overflow Interrupt and global interrupts are enabled. This does also apply to the Timer Output Compare flag and interrupt.

Asynchronous Status Register – ASSR

Bit	7	6	5	4	3	2	1	0	
$26 ($46)	-	-	-	-	AS2	TCN2UB	OCR2UB	TCR2UB	ASSR
Read/Write	R	R	R	R	R/W	R	R	R	
Initial Value	0	0	0	0	0	0	0	0	

- **Bit 7..4 - Res: Reserved Bits**

These bits are reserved bits in the FPSLIC and are always read as zero.

- **Bit 3 - AS2: Asynchronous Timer/Counter2 Mode**

When this bit is cleared (zero) Timer/Counter2 is clocked from the internal system clock, CK. If AS2 is set, the Timer/Counter2 is clocked from the TOSC1 pin. When the value of this bit is changed the contents of TCNT2, OCR2 and TCCR2 might get corrupted.

- **Bit 2 - TCN2UB: Timer/Counter2 Update Busy**

When Timer/Counter2 operates asynchronously and TCNT2 is written, this bit becomes set (one). When TCNT2 has been updated from the temporary storage register, this bit is cleared (zero) by the hardware. A logic 0 in this bit indicates that TCNT2 is ready to be updated with a new value.

- **Bit 1 - OCR2UB: Output Compare Register2 Update Busy**

When Timer/Counter2 operates asynchronously and OCR2 is written, this bit becomes set (one). When OCR2 has been updated from the temporary storage register, this bit is cleared (zero) by the hardware. A logic 0 in this bit indicates that OCR2 is ready to be updated with a new value.

- **Bit 0 - TCR2UB: Timer/Counter Control Register2 Update Busy**

When Timer/Counter2 operates asynchronously and TCCR2 is written, this bit becomes set (one). When TCCR2 has been updated from the temporary storage register, this bit is cleared (zero) by the hardware. A logic 0 in this bit indicates that TCCR2 is ready to be updated with a new value.

If a write is performed to any of the three Timer/Counter2 registers while its update busy flag is set (one), the updated value might get corrupted and cause an unintentional interrupt to occur.

The mechanisms for reading TCNT2, OCR2 and TCCR2 are different. When reading TCNT2, the actual timer value is read. When reading OCR2 or TCCR2, the value in the temporary storage register is read.

Asynchronous Operation of Timer/Counter2

When Timer/Counter2 operates asynchronously, some considerations must be taken:

- When switching between asynchronous and synchronous clocking of Timer/Counter2, the timer registers TCNT2, OCR2 and TCCR2 might get corrupted. A safe procedure for switching the clock source is:
  1. Disable the Timer/Counter2 interrupts by clearing OCIE2 and TOIE2.
  2. Select clock source by setting AS2 as appropriate.
  3. Write new values to TCNT2, OCR2 and TCCR2.
  4. To switch to asynchronous operation: Wait for TCN2UB, OCR2UB, and TCR2UB.
  5. Enable interrupts, if needed.
- The oscillator is optimized for use with a 32.768 kHz watch crystal. An external clock signal applied to this pin goes through the same amplifier having a bandwidth of 256 kHz. The external clock signal should therefore be in the interval
  0 Hz – 1 MHz. The frequency of the clock signal applied to the TOSC1 pin must be lower than one fourth of the CPU main clock frequency.
- When writing to one of the registers TCNT2, OCR2, or TCCR2, the value is transferred to a temporary register, and latched after two positive edges on TOSC1. The user should not write a new value before the contents of the temporary register have been transferred to its destination. Each of the three mentioned registers have their individual temporary register, which means that, e.g., writing to TCNT2 does not disturb an OCR2 write in progress. To detect that a transfer to the destination register has taken place, an Asynchronous Status Register – ASSR has been implemented.
- When entering Power-save mode after having written to TCNT2, OCR2, or TCCR2, the user must wait until the written register has been updated if Timer/Counter2 is used to wake-up the device. Otherwise, the MCU will go to sleep before the changes have had any effect. This is extremely important if the Output Compare2 interrupt is used to wake-up the device; Output compare is disabled during write to OCR2 or TCNT2. If the write cycle is not finished (i.e., the MCU enters Sleep mode before the OCR2UB bit returns to zero), the device will never get a compare match and the MCU will not wake-up.
- If Timer/Counter2 is used to wake-up the device from Power-save mode, precautions must be taken if the user wants to re-enter Power-save mode: The interrupt logic needs one TOSC1 cycle to be reset. If the time between wake-up and reentering Power-save mode is less than one TOSC1 cycle, the interrupt will not occur and the device will fail to wake up. If the user is in doubt whether the time before re-entering power-save is sufficient, the following algorithm can be used to ensure that one TOSC1 cycle has elapsed:
  1. Write a value to TCCR2, TCNT2, or OCR2.
  2. Wait until the corresponding Update Busy flag in ASSR returns to zero.
  3. Enter Power-save mode.
- When asynchronous operation is selected, the 32.768 kHz oscillator for Timer/Counter2 is always running, except in Power-down mode. After a power-up reset or wake-up from power-down, the user should be aware of the fact that this oscillator might take as long as one second to stabilize. Therefore, the contents of all Timer2 registers must be considered lost after a wake-up from power-down, due to the unstable clock signal. The user is advised to wait for at least one second before using Timer/Counter2 after power-up or wake-up from power-down.
- Description of wake-up from Power-save mode when the timer is clocked asynchronously. When the interrupt condition is met, the wake-up process is started on the following cycle

of the timer clock, that is, the timer is always advanced by at least one before the processor can read the counter value. The interrupt flags are updated three processor cycles after the processor clock has started. During these cycles, the processor executes instructions, but the interrupt condition is not readable, and the interrupt routine has not started yet.

- During asynchronous operation, the synchronization of the interrupt flags for the asynchronous timer takes three processor cycles plus one timer cycle. The timer is therefore advanced by at least one before the processor can read the timer value causing the setting of the interrupt flag. The output compare pin is changed on the timer clock and is not synchronized to the processor clock.

Timer/Counter1

Figure 54 shows the block diagram for Timer/Counter1.

Figure 54. Timer/Counter1 Block Diagram

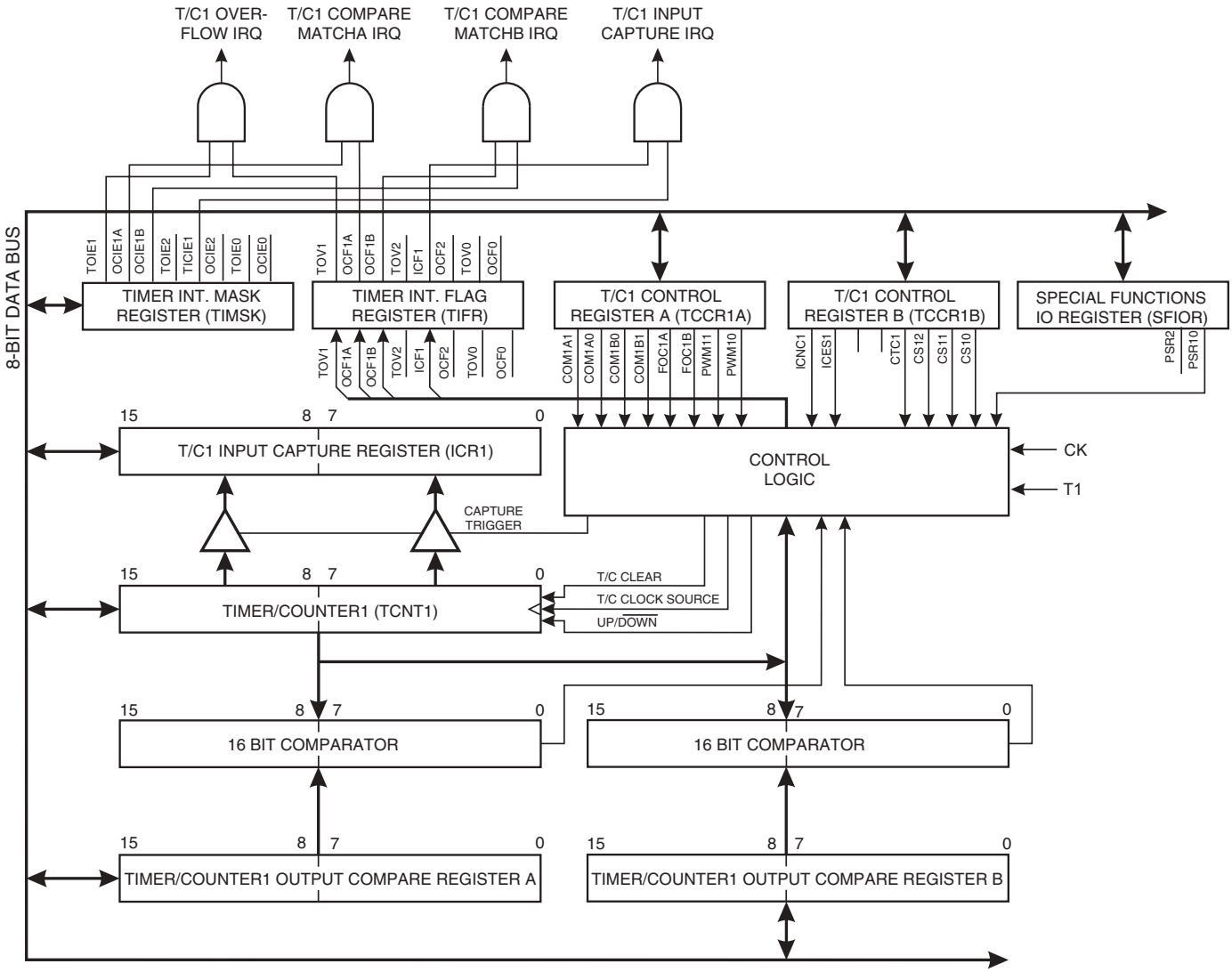

The 16-bit Timer/Counter1 can select the clock source from CK, prescaled CK, or an external pin. In addition it can be stopped as described in section “Timer/Counter1 Control Register B – TCCR1B” on page 98. The different status flags (overflow, compare match and capture event) are found in the Timer/Counter Interrupt Flag Register – TIFR. Control signals are found in the Timer/Counter1 Control Registers – TCCR1A and TCCR1B. The interrupt enable/disable settings for Timer/Counter1 are found in the Timer/Counter Interrupt Mask Register – TIMSK.

When Timer/Counter1 is externally clocked, the external signal is synchronized with the oscillator frequency of the CPU. To assure proper sampling of the external clock, the minimum time between two external clock transitions must be at least one internal CPU clock period. The external clock signal is sampled on the rising edge of the internal CPU clock.

The 16-bit Timer/Counter1 features both a high-resolution and a high-accuracy usage with the lower prescaling opportunities. Similarly, the high-prescaling opportunities makes the Timer/Counter1 useful for lower speed functions or exact-timing functions with infrequent actions.

The Timer/Counter1 supports two Output Compare functions using the Output Compare Register 1 A and B – OCR1A and OCR1B as the data sources to be compared to the Timer/Counter1 contents. The Output Compare functions include optional clearing of the counter on compareA match, and actions on the Output Compare pins on both compare matches.

Timer/Counter1 can also be used as a 8-, 9- or 10-bit Pulse Width Modulator. In this mode, the counter and the OCR1A/OCR1B registers serve as a dual-glitch-free stand-alone PWM with centered pulses. Alternatively, the Timer/Counter1 can be configured to operate at twice the speed in PWM mode, but without centered pulses. Refer to page 101 for a detailed description on this function.

The Input Capture function of Timer/Counter1 provides a capture of the Timer/Counter1 contents to the Input Capture Register – ICR1, triggered by an external event on the Input Capture Pin – PE7(ICP). The actual capture event settings are defined by the Timer/Counter1 Control Register – TCCR1B.

Figure 55. ICP Pin Schematic Diagram

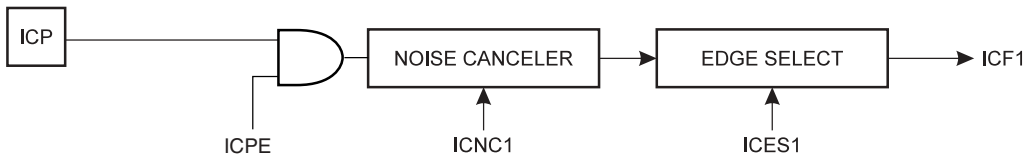

ICPE: Input Capture Pin Enable

If the noise canceler function is enabled, the actual trigger condition for the capture event is monitored over four samples, and all four must be equal to activate the capture flag.

Timer/Counter1 Control Register A – TCCR1A

Bit	7	6	5	4	3	2	1	0	
$2F ($4F)	COM1A1	COM1A0	COM1B1	COM1B0	FOC1A	FOC1B	PWM11	PWM10	TCCR1A
Read/Write	R/W	R/W	R/W	R/W	R/w	R/W	R/W	R/W	
Initial Value	0	0	0	0	0	0	0	0	

- **Bits 7,6 - COM1A1, COM1A0: Compare Output Mode1A, Bits 1 and 0**

The COM1A1 and COM1A0 control bits determine any output pin action following a compare match in Timer/Counter1. Any output pin actions affect pin OC1A – Output CompareA pin PE6. This is an alternative function to an I/O port, and the corresponding direction control bit must be set (one) to control an output pin. The control configuration is shown in Table 27.

- **Bits 5,4 - COM1B1, COM1B0: Compare Output Mode1B, Bits 1 and 0**

The COM1B1 and COM1B0 control bits determine any output pin action following a compare match in Timer/Counter1. Any output pin actions affect pin OC1B – Output CompareB pin PE5. This is an alternative function to an I/O port, and the corresponding direction control bit must be set (one) to control an output pin. The following control configuration is given:

Table 27. Compare 1 Mode Select(1)

COM1X1(2)	COM1X0(2)	Description
0	0	Timer/Counter1 disconnected from output pin OC1X
0	1	Toggles the OC1X output line
1	0	Clears the OC1X output line (to zero)
1	1	Sets the OC1X output line (to one)

Notes: 1. In PWM mode, these bits have a different function. Refer to Table 31 for a detailed description.
2. X = A or B

- **Bit 3 - FOC1A: Force Output Compare1A**

Writing a logic 1 to this bit forces a change in the compare match output pin PE6 according to the values already set in COM1A1 and COM1A0. If the COM1A1 and COM1A0 bits are written in the same cycle as FOC1A, the new settings will not take effect until next compare match or forced compare match occurs. The Force Output Compare bit can be used to change the output pin without waiting for a compare match in the timer. The automatic action programmed in COM1A1 and COM1A0 happens as if a Compare Match had occurred, but no interrupt is generated and it will not clear the timer even if CTC1 in TCCR1B is set. The FOC1A bit will always be read as zero. The setting of the FOC1A bit has no effect in PWM mode.

- **Bit 2 - FOC1B: Force Output Compare1B**

Writing a logic 1 to this bit forces a change in the compare match output pin PE5 according to the values already set in COM1B1 and COM1B0. If the COM1B1 and COM1B0 bits are written in the same cycle as FOC1B, the new settings will not take effect until next compare match or forced compare match occurs. The Force Output Compare bit can be used to change the output pin without waiting for a compare match in the timer. The automatic action programmed in COM1B1 and COM1B0 happens as if a Compare Match had occurred, but no interrupt is generated. The FOC1B bit will always be read as zero. The setting of the FOC1B bit has no effect in PWM mode.

- **Bits 1..0 - PWM11, PWM10: Pulse Width Modulator Select Bits**

These bits select PWM operation of Timer/Counter1 as specified in Table 28. This mode is described on page 101.

Table 28. PWM Mode Select

PWM11	PWM10	Description
0	0	PWM operation of Timer/Counter1 is disabled
0	1	Timer/Counter1 is an 8-bit PWM
1	0	Timer/Counter1 is a 9-bit PWM
1	1	Timer/Counter1 is a 10-bit PWM

Timer/Counter1 Control Register B – TCCR1B

Bit	7	6	5	4	3	2	1	0	
$2E ($4E)	ICNC1	ICES1	ICPE	-	CTC1	CS12	CS11	CS10	TCCR1B
Read/Write	R/W	R/W	R/W	R	R/W	R/W	R/W	R/W	
Initial Value	0	0	0	0	0	0	0	0	

- **Bit 7 - ICNC1: Input Capture1 Noise Canceler (4 CKs)**

When the ICNC1 bit is cleared (zero), the input capture trigger noise canceler function is disabled. The input capture is triggered at the first rising/falling edge sampled on the PE7(ICP) – input capture pin – as specified. When the ICNC1 bit is set (one), four successive samples are measures on the PE7(ICP) – input capture pin, and all samples must be High/Low according to the input capture trigger specification in the ICES1 bit. The actual sampling frequency is XTAL clock frequency.

- **Bit 6 - ICES1: Input Capture1 Edge Select**

While the ICES1 bit is cleared (zero), the Timer/Counter1 contents are transferred to the Input Capture Register – ICR1 – on the falling edge of the input capture pin – PE7(ICP). While the ICES1 bit is set (one), the Timer/Counter1 contents are transferred to the Input Capture Register – ICR1 – on the rising edge of the input capture pin – PE7(ICP).

- **Bit 5 - ICPE: Input Captive Pin Enable**

This bit must be set by the user to enable the Input Capture Function of timer1. Disabling prevents unnecessary register copies during normal use of the PE7 port.

- **Bit 4 - Res: Reserved Bit**

This bit is reserved in the FPSLIC and will always read zero.

- **Bit 3 - CTC1: Clear Timer/Counter1 on Compare Match**

When the CTC1 control bit is set (one), the Timer/Counter1 is reset to $0000 in the clock cycle after a compareA match. If the CTC1 control bit is cleared, Timer/Counter1 continues counting and is unaffected by a compare match. When a prescaling of 1 is used, and the compareA register is set to C, the timer will count as follows if CTC1 is set:

... | C-1 | C | 0 | 1 | ...

When the prescaler is set to divide by 8, the timer will count like this:

... | C-1, C-1, C-1, C-1, C-1, C-1, C-1, C-1 | C, C, C, C, C, C, C, C | 0, 0, 0, 0, 0, 0, 0, 0 | ...

In PWM mode, this bit has a different function. If the CTC1 bit is cleared in PWM mode, the Timer/Counter1 acts as an up/down counter. If the CTC1 bit is set (one), the Timer/Counter wraps when it reaches the TOP value. Refer to page 101 for a detailed description.

- **Bits 2,1,0 - CS12, CS11, CS10: Clock Select1, Bits 2, 1 and 0**

The Clock Select1 bits 2,1 and 0 define the prescaling source of Timer/Counter1.

Table 29. Clock 1 Prescale Select

CS12	CS11	CS10	Description
0	0	0	Stop, the Timer/Counter1 is stopped
0	0	1	CK
0	1	0	CK/8
0	1	1	CK/64
1	0	0	CK/256
1	0	1	CK/1024
1	1	0	External pin PE4 (T1), falling edge
1	1	1	External pin PE4 (T1), rising edge

The Stop condition provides a Timer Enable/Disable function. The CK down-divided modes are scaled directly from the CK oscillator clock. If the external pin modes are used for Timer/Counter1, transitions on PE4/(T1) will clock the counter even if the pin is configured as an output. This feature can give the user SW control of the counting.

Timer/Counter1 Register – TCNT1H AND TCNT1L

Bit	15	14	13	12	11	10	9	8	
$2D ($4D)	MSB								TCNT1H
$2C ($4C)								LSB	TCNT1L
	7	6	5	4	3	2	1	0	
Read/Write	R/W	R/W	R/W	R/W	R/W	R/W	R/W	R/W	
	R/W	R/W	R/W	R/W	R/W	R/W	R/W	R/W	
Initial Value	0	0	0	0	0	0	0	0	
	0	0	0	0	0	0	0	0	

This 16-bit register contains the prescaled value of the 16-bit Timer/Counter1. To ensure that both the High and low bytes are read and written simultaneously when the CPU accesses these registers, the access is performed using an 8-bit temporary register (TEMP). This temporary register is also used when accessing OCR1A, OCR1B and ICR1. If the main program and also interrupt routines perform access to registers using TEMP, interrupts must be disabled during access from the main program and interrupt routines.

TCNT1 Timer/Counter1 Write

When the CPU writes to the high byte TCNT1H, the written data is placed in the TEMP register. Next, when the CPU writes the low byte TCNT1L, this byte of data is combined with the byte data in the TEMP register, and all 16 bits are written to the TCNT1 Timer/Counter1 register simultaneously. Consequently, the high byte TCNT1H must be accessed first for a full 16-bit register write operation.

TCNT1 Timer/Counter1 Read

When the CPU reads the low byte TCNT1L, the data of the low byte TCNT1L is sent to the CPU and the data of the high byte TCNT1H is placed in the TEMP register. When the CPU reads the data in the high byte TCNT1H, the CPU receives the data in the TEMP register. Consequently, the low byte TCNT1L must be accessed first for a full 16-bit register read operation.

The Timer/Counter1 is realized as an up or up/down (in PWM mode) counter with read and write access. If Timer/Counter1 is written to and a clock source is selected, the Timer/Counter1 continues counting in the timer clock-cycle after it is preset with the written value.

Timer/Counter1 Output Compare Register – OCR1AH AND OCR1AL

Bit	15	14	13	12	11	10	9	8	
$2B ($4B)	**MSB**								**OCR1AH**
$2A ($4A)								**LSB**	**OCR1AL**
	7	6	5	4	3	2	1	0	
Read/Write	R/W	R/W	R/W	R/W	R/W	R/W	R/W	R/W	
	R/W	R/W	R/W	R/W	R/W	R/W	R/W	R/W	
Initial Value	0	0	0	0	0	0	0	0	
	0	0	0	0	0	0	0	0	

Timer/Counter1 Output Compare Register – OCR1BH AND OCR1BL

Bit	15	14	13	12	11	10	9	8	
$29 ($49)	**MSB**								**OCR1BH**
$28 ($48)								**LSB**	**OCR1BL**
	7	6	5	4	3	2	1	0	
Read/Write	R/W	R/W	R/W	R/W	R/W	R/W	R/W	R/W	
	R/W	R/W	R/W	R/W	R/W	R/W	R/W	R/W	
Initial Value	0	0	0	0	0	0	0	0	
	0	0	0	0	0	0	0	0	

The output compare registers are 16-bit read/write registers.

The Timer/Counter1 Output Compare Registers contain the data to be continuously compared with Timer/Counter1. Actions on compare matches are specified in the Timer/Counter1 Control and Status register. A compare match does only occur if Timer/Counter1 counts to the OCR value. A software write that sets TCNT1 and OCR1A or OCR1B to the same value does not generate a compare match.

A compare match will set the compare interrupt flag in the CPU clock cycle following the compare event.

Since the Output Compare Registers – OCR1A and OCR1B – are 16-bit registers, a temporary register TEMP is used when OCR1A/B are written to ensure that both bytes are updated simultaneously. When the CPU writes the high byte, OCR1AH or OCR1BH, the data is temporarily stored in the TEMP register. When the CPU writes the low byte, OCR1AL or OCR1BL, the TEMP register is simultaneously written to OCR1AH or OCR1BH. Consequently, the high byte OCR1AH or OCR1BH must be written first for a full 16-bit register write operation.

The TEMP register is also used when accessing TCNT1, and ICR1. If the main program and also interrupt routines perform access to registers using TEMP, interrupts must be disabled during access from the main program and interrupt routines.

Timer/Counter1 Input Capture Register – ICR1H AND ICR1L

Bit	15	14	13	12	11	10	9	8	
$25 ($45)	**MSB**								**ICR1H**
$24 ($44)								**LSB**	**ICR1L**
	7	6	5	4	3	2	1	0	
Read/Write	R	R	R	R	R	R	R	R	
	R	R	R	R	R	R	R	R	
Initial Value	0	0	0	0	0	0	0	0	
	0	0	0	0	0	0	0	0	

The input capture register is a 16-bit read-only register.

When the rising or falling edge (according to the input capture edge setting – ICES1) of the signal at the input capture pin – PE7(ICP) – is detected, the current value of the Timer/Counter1 Register – TCNT1 is transferred to the Input Capture Register – ICR1. In the same cycle, the input capture flag – ICF1 – is set (one).

Since the Input Capture Register – ICR1 – is a 16-bit register, a temporary register TEMP is used when ICR1 is read to ensure that both bytes are read simultaneously. When the CPU reads the low byte ICR1L, the data is sent to the CPU and the data of the high byte ICR1H is placed in the TEMP register. When the CPU reads the data in the high byte ICR1H, the CPU receives the data in the TEMP register. Consequently, the low byte ICR1L must be accessed first for a full 16-bit register read operation.

The TEMP register is also used when accessing TCNT1, OCR1A and OCR1B. If the main program and also interrupt routines perform access to registers using TEMP, interrupts must be disabled during access from the main program and interrupt routine.

Timer/Counter1 in PWM Mode

When the PWM mode is selected, Timer/Counter1 and the Output Compare Register1A – OCR1A and the Output Compare Register1B – OCR1B, form a dual 8-, 9- or 10-bit, free-running, glitch-free and phase correct PWM with outputs on the PD6(OC1A) and PE5(OC1B) pins. In this mode the Timer/Counter1 acts as an up/down counter, counting up from $0000 to TOP (see Table 30), where it turns and counts down again to zero before the cycle is repeated. When the counter value matches the contents of the 8, 9 or 10 least significant bits (depends of the resolution) of OCR1A or OCR1B, the PD6(OC1A)/PE5(OC1B) pins are set or cleared according to the settings of the COM1A1/COM1A0 or COM1B1/COM1B0 bits in the Timer/Counter1 Control Register TCCR1A. Refer to Table 31 for details.

Alternatively, the Timer/Counter1 can be configured to a PWM that operates at twice the speed as in the mode described above. Then the Timer/Counter1 and the Output Compare Register1A – OCR1A and the Output Compare Register1B – OCR1B, form a dual 8-, 9- or 10-bit, free-running and glitch-free PWM with outputs on the PE6(OC1A) and PE5(OC1B) pins.

As shown in Table 30, the PWM operates at either 8-, 9- or 10-bit resolution. Note the unused bits in OCR1A, OCR1B and TCNT1 will automatically be written to zero by the hardware. For example, bit 9 to 15 will be set to zero in OCR1A, OCR1B and TCNT1 if the 9-bit PWM resolution is selected. This makes it possible for the user to perform read-modify-write operations in any of the three resolution modes and the unused bits will be treated as “don’t care”.

Table 30. Timer TOP Values and PWM Frequency

CTC1	PWM11	PWM10	PWM Resolution	Timer TOP Value	Frequency
0	0	1	8-bit	$00FF (255)	$f_{TCK1}/510$
0	1	0	9-bit	$01FF (511)	$f_{TCK1}/1022$
0	1	1	10-bit	$03FF(1023)	$f_{TCK1}/2046$
1	0	1	8-bit	$00FF (255)	$f_{TCK1}/256$
1	1	0	9-bit	$01FF (511)	$f_{TCK1}/512$
1	1	1	10-bit	$03FF(1023)	$f_{TCK1}/1024$

Table 31. Compare1 Mode Select in PWM Mode

CTC1(1)	COM1X1(1)	COM1X0(1)	Effect on OCX1
x(2)	0	x(2)	Not connected
0	1	0	Cleared on compare match, up-counting. Set on compare match, down-counting (non-inverted PWM)
0	1	1	Cleared on compare match, down-counting. Set on compare match, up-counting (inverted PWM)
1	1	0	Cleared on compare match, set on overflow
1	1	1	Set on compare match, set on overflow

Notes: 1. X = A or B
2. x = Don't care

In the PWM mode, the 8, 9 or 10 least significant OCR1A/OCR1B bits (depends of resolution), when written, are transferred to a temporary location. They are latched when Timer/Counter1 reaches the value TOP. This prevents the occurrence of odd-length PWM pulses (glitches) in the event of an unsynchronized OCR1A/OCR1B write. See Figure 56 and Figure 57 for an example in each mode.

Figure 56. Effects on Unsynchronized OCR1 Latching

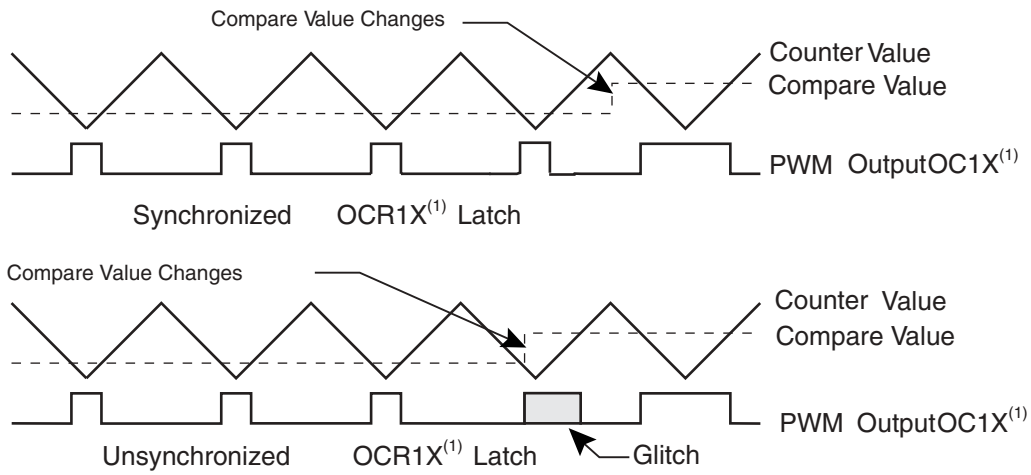

Note: 1. X = A or B

Figure 57. Effects of Unsynchronized OCR1 Latching in Overflow Mode

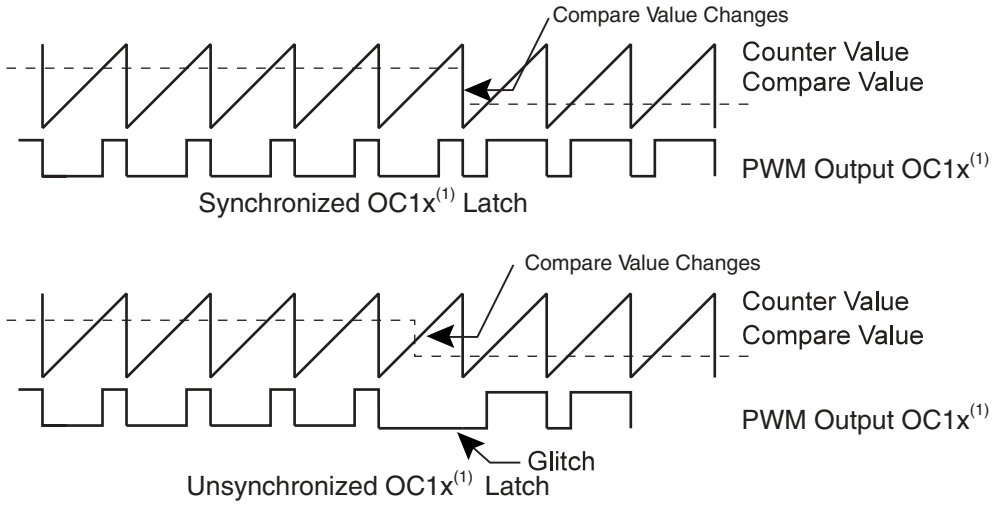

Note: 1. X = A or B

During the time between the write and the latch operation, a read from OCR1A or OCR1B will read the contents of the temporary location. This means that the most recently written value always will read out of OCR1A/B.

When the OCR1X contains $0000 or TOP, and the up/down PWM mode is selected, the output OC1A/OC1B is updated to Low or High on the next compare match according to the settings of COM1A1/COM1A0 or COM1B1/COM1B0. This is shown in Table 32. In overflow PWM mode, the output OC1A/OC1B is held Low or High only when the Output Compare Register contains TOP.

Table 32. PWM Outputs OCR1X = $0000 or TOP[1]

COM1X1[2]	COM1X0[2]	OCR1X[2]	Output OC1X[2]
1	0	$0000	L
1	0	TOP	H
1	1	$0000	H
1	1	TOP	L

Notes: 1. In overflow PWM mode, this table is only valid for OCR1X = TOP.
2. X = A or B

In up/down PWM mode, the Timer Overflow Flag1, TOV1, is set when the counter advances from $0000. In overflow PWM mode, the Timer Overflow flag is set as in normal Timer/Counter mode. Timer Overflow Interrupt1 operates exactly as in normal Timer/Counter mode, i.e., it is executed when TOV1 is set provided that Timer Overflow Interrupt1 and global interrupts are enabled. This also applies to the Timer Output Compare1 flags and interrupts.

Watchdog Timer

The Watchdog Timer is clocked from a separate on-chip oscillator which runs at 1 MHz. This is the typical value at V_{CC} = 3.3V. See characterization data for typical values at other V_{CC} levels. By controlling the Watchdog Timer prescaler, the watchdog reset interval can be adjusted, see Table 33 on page 105 for a detailed description. The WDR (watchdog reset) instruction resets the Watchdog Timer. Eight different clock cycle periods can be selected to determine the reset period. If the reset period expires without another watchdog reset, the FPSLIC resets and executes from the reset vector.

To prevent unintentional disabling of the watchdog, a special turn-off sequence must be followed when the watchdog is disabled, see Figure 58.

Figure 58. Watchdog Timer

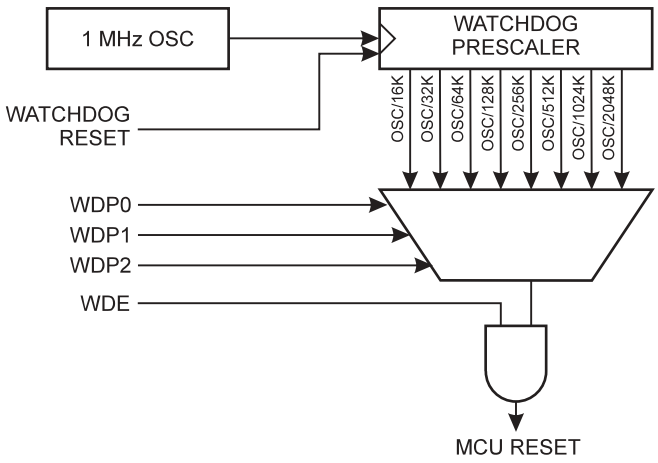

Watchdog Timer Control Register – WDTCR

Bit	7	6	5	4	3	2	1	0	
$21 ($41)	-	-	-	WDTOE	WDE	WDP2	WDP1	WDP0	WDTCR
Read/Write	R	R	R	R/W	R/W	R/W	R/W	R/W	
Initial Value	0	0	0	0	0	0	0	0	

- **Bits 7..5 - Res: Reserved Bits**

These bits are reserved bits in the FPSLIC and will always read as zero.

- **Bit 4 - WDTOE: Watchdog Turn-off Enable**

This bit must be set (one) when the WDE bit is cleared. Otherwise, the watchdog will not be disabled. Once set, the hardware will clear this bit to zero after four clock cycles. Refer to the description of the WDE bit below for a watchdog disable procedure.

- **Bit 3 - WDE: Watchdog Enable**

When the WDE is set (one) the Watchdog Timer is enabled, but if the WDE is cleared (zero), the Watchdog Timer function is disabled. WDE can only be cleared if the WDTOE bit is set (one). To disable an enabled Watchdog Timer, the following procedure must be followed:

1. In the same operation, write a logic 1 to WDTOE and WDE. A logic 1 must be written to WDE even though it is set to one before the disable operation starts.
2. Within the next four clock cycles, write a logic 0 to WDE. This disables the watchdog.

- **Bits 2..0 - WDP2, WDP1, WDP0: Watchdog Timer Prescaler 2, 1 and 0**

The WDP2, WDP1 and WDP0 bits determine the Watchdog Timer prescaling when the Watchdog Timer is enabled. The different prescaling values and their corresponding Time-out periods are shown in Table 33.

Table 33. Watchdog Timer Prescale Select

WDP2	WDP1	WDP0	Number of WDT Oscillator Cycles[1]	Typical Time-out at V_{CC} = 3.0V
0	0	0	16K	15 ms
0	0	1	32K	30 ms
0	1	0	64K	60 ms
0	1	1	128K	0.12s
1	0	0	256K	0.24s
1	0	1	512K	0.49s
1	1	0	1,024K	0.97s
1	1	1	2,048K	1.9s

Note: 1. The frequency of the watchdog oscillator is voltage dependent as shown in the Electrical Characteristics section. The WDR (watchdog reset) instruction should always be executed before the Watchdog Timer is enabled. This ensures that the reset period will be in accordance with the Watchdog Timer prescale settings. If the Watchdog Timer is enabled without reset, the Watchdog Timer may not start counting from zero.

Multiplier

The multiplier is capable of multiplying two 8-bit numbers, giving a 16-bit result using only two clock cycles. The multiplier can handle both signed and unsigned integer and fractional numbers without speed or code size penalty. Below are some examples of using the multiplier for 8-bit arithmetic.

To be able to use the multiplier, six new instructions are added to the AVR instruction set. These are:

- MUL, multiplication of unsigned integers
- MULS, multiplication of signed integers
- MULSU, multiplication of a signed integer with an unsigned integer
- FMUL, multiplication of unsigned fractional numbers
- FMULS, multiplication of signed fractional numbers
- FMULSU, multiplication of a signed fractional number and with an unsigned fractional number

The MULSU and FMULSU instructions are included to improve the speed and code density for multiplication of 16-bit operands. The second section will show examples of how to efficiently use the multiplier for 16-bit arithmetic.

The component that makes a dedicated digital signal processor (DSP) specially suitable for signal processing is the multiply-accumulate (MAC) unit. This unit is functionally equivalent to a multiplier directly connected to an arithmetic logic unit (ALU). The FPSLIC-based AVR Core is designed to give FPSLIC the ability to effectively perform the same multiply-accumulate operation.

The multiply-accumulate operation (sometimes referred to as *multiply-add operation*) has one critical drawback. When adding multiple values to one result variable, even when adding positive and negative values to some extent, cancel each other; the risk of the result variable to overrun its limits becomes evident, i.e. if adding 1 to a signed byte variable that contains the value +127, the result will be -128 instead of +128. One solution often used to solve this problem is to introduce fractional numbers, i.e. numbers that are less than 1 and greater than or equal to -1. Some issues regarding the use of fractional numbers are discussed.

A list of all implementations with key performance specifications is given in Table 34.

Table 34. Performance Summary

8-bit x 8-bit Routines:	**Word (Cycles)**
Unsigned Multiply 8 x 8 = 16 bits	1 (2)
Signed Multiply 8 x 8 = 16 bits	1 (2)
Fractional Signed/Unsigned Multiply 8 x 8 = 16 bits	1 (2)
Fractional Signed Multiply-accumulate 8 x 8 + = 16 bits	3 (4)
16-bit x 16-bit Routines:	**Word (Cycles)**
Signed/Unsigned Multiply 16 x 16 = 32 bits	6 (9)
UnSigned Multiply 16 x 16 = 32 bits	13 (17)
Signed Multiply 16 x 16 = 32 bits	15 (19)
Signed Multiply-accumulate 16 x 16 + = 32 bits	19 (23)
Fractional Signed Multiply 16 x 16 = 32 bits	16 (20)
Fractional Signed Multiply-accumulate 16 x 16 + = 32 bits	21 (25)

8-bit Multiplication

Doing an 8-bit multiply using the hardware multiplier is simple: just load the operands into two registers (or only one for square multiply) and execute one of the multiply instructions. The result will be placed in register pair R1:R0. However, note that only the MUL instruction does not have register usage restrictions. Figure 59 shows the valid (operand) register usage for each of the multiply instructions.

Example 1 – Basic Usage

The first example shows an assembly code that reads the port B input value and multiplies this value with a constant (5) before storing the result in register pair R17:R16.

```
in    r16,PINB      ; Read pin values
ldi   r17,5         ; Load 5 into r17
mul   r16,r17       ; r1:r0 = r17 * r16
movw  r17:r16,r1:r0; Move the result to the r17:r16
                    ; register pair
```

Note the use of the MOVW instruction. This example is valid for all of the multiply instructions.

Figure 59. Valid Register Usage

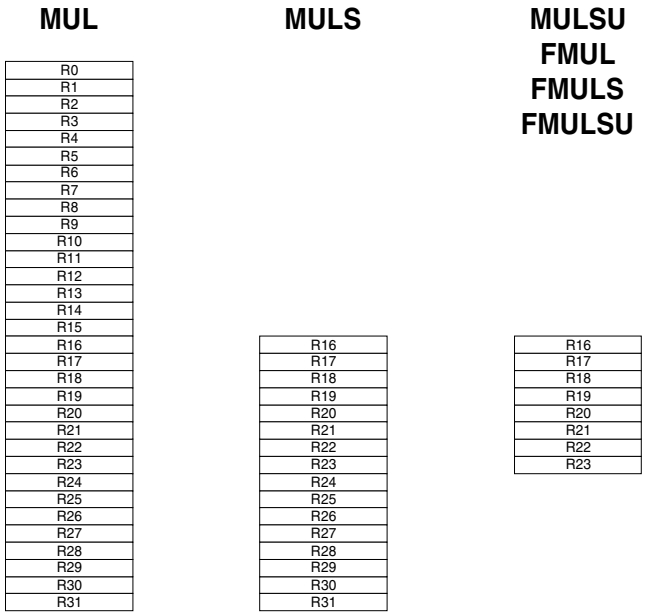

Example 2 – Special Cases

This example shows some special cases of the MUL instruction that are valid.

```
lds   r0,variableA; Load r0 with SRAM variable A
lds   r1,variableB; Load r1 with SRAM variable B
mul   r1,r0       ; r1:r0 = variable A * variable B

lds   r0,variableA; Load r0 with SRAM variable A
mul   r0,r0       ; r0:r0 = square(variable A)
```

Even though the operand is put in the result register pair R1:R0, the operation gives the correct result since R1 and R0 are fetched in the first clock cycle and the result is stored back in the second clock cycle.

Example 3 – Multiply-accumulate Operation

The final example of 8-bit multiplication shows a multiply-accumulate operation. The general formula can be written as:

$$c(n) = a(n) \times b + c(n-1)$$

```
                ; r17:r16 = r18 * r19 + r17:r16

in    r18,PINB  ; Get the current pin value on port B
ldi   r19,b     ; Load constant b into r19
muls  r19,r18   ; r1:r0 = variable A * variable B
add   r16,r0    ; r17:r16 += r1:r0
adc   r17,r1
```

Typical applications for the multiply-accumulate operation are FIR (Finite Impulse Response) and IIR (Infinite Impulse Response) filters, PID regulators and FFT (Fast Fourier Transform). For these applications the FMULS instruction is particularly useful. The main advantage of using the FMULS instruction instead of the MULS instruction is that the 16-bit result of the FMULS operation always may be approximated to a (well-defined) 8-bit format, see “Using Fractional Numbers” on page 111.

16-bit Multiplication

The new multiply instructions are specifically designed to improve 16-bit multiplication. This section presents solutions for using the hardware multiplier to do multiplication with 16-bit operands.

Figure 60 schematically illustrates the general algorithm for multiplying two 16-bit numbers with a 32-bit result (C = A • B). AH denotes the high byte and AL the low byte of the A operand. CMH denotes the middle high byte and CML the middle low byte of the result C. Equal notations are used for the remaining bytes.

The algorithm is basic for all multiplication. All of the partial 16-bit results are shifted and added together. The sign extension is necessary for signed numbers only, but note that the carry propagation must still be done for unsigned numbers.

Figure 60. 16-bit Multiplication, General Algorithm

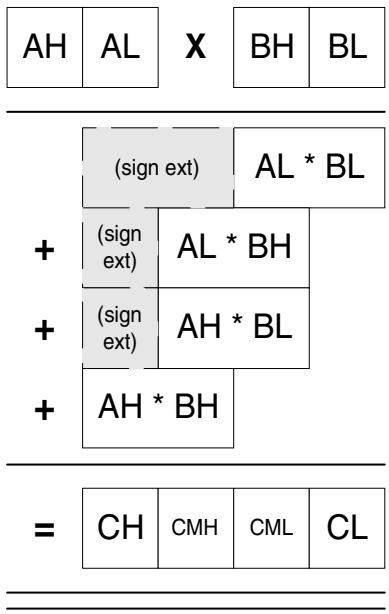

16-bit x 16-bit = 16-bit Operation

This operation is valid for both unsigned and signed numbers, even though only the unsigned multiply instruction (MUL) is needed, see Figure 61. A mathematical explanation is given:

When A and B are positive numbers, or at least one of them is zero, the algorithm is clearly correct, provided that the product $C = A \bullet B$ is less than 2^{16} if the product is to be used as an unsigned number, or less than 2^{15} if the product is to be used as a signed number.

When both factors are negative, the two's complement notation is used:
$A = 2^{16} - |A|$ and $B = 2^{16} - |B|$:

$C = A \bullet B = (2^{16} - |A|) \bullet (2^{16} - |B|) = |A \bullet B| + 2^{32} - 2^{16} \bullet (|A| + |B|)$

Here we are only concerned with the 16 LSBs; the last part of this sum will be discarded and we will get the (correct) result $C = |A \bullet B|$.

Figure 61. 16-bit Multiplication, 16-bit Result

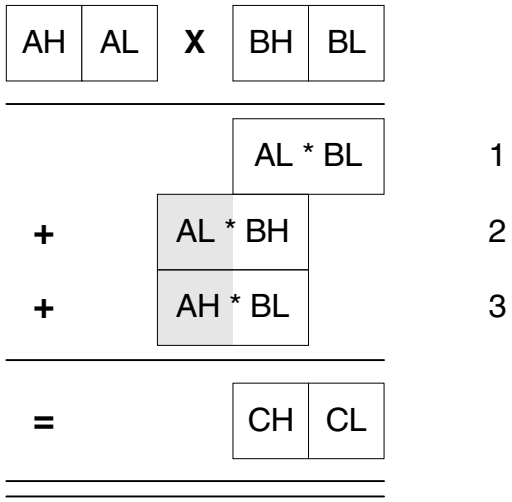

When one factor is negative and one factor is positive, for example, A is negative and B is positive:

$C = A \bullet B = (2^{16} - |A|) \bullet |B| = (2^{16} \bullet |B|) - |A \bullet B| = (2^{16} - |A \bullet B|) + 2^{16} \bullet (|B| - 1)$

The MSBs will be discarded and the correct two's complement notation result will be
$C = 2^{16} - |A \bullet B|$.

The product must be in the range $0 \leq C \leq 2^{16} - 1$ if unsigned numbers are used, and in the range $-2^{15} \leq C \leq 2^{15} - 1$ if signed numbers are used.

When doing integer multiplication in C language, this is how it is done. The algorithm can be expanded to do 32-bit multiplication with 32-bit result.

16-bit x 16-bit = 32-bit Operation

Example 4 – Basic Usage 16-bit x 16-bit = 32-bit Integer Multiply

Below is an example of how to call the 16 x 16 = 32 multiply subroutine. This is also illustrated in Figure 62.

```
ldi R23,HIGH(672)
ldi R22,LOW(672) ; Load the number 672 into r23:r22
ldi R21,HIGH(1844)
ldi R20,LOW(1844); Load the number 1844 into r21:r20
callmul16x16_32  ; Call 16bits x 16bits = 32bits
                 ; multiply routine
```

Figure 62. 16-bit Multiplication, 32-bit Result

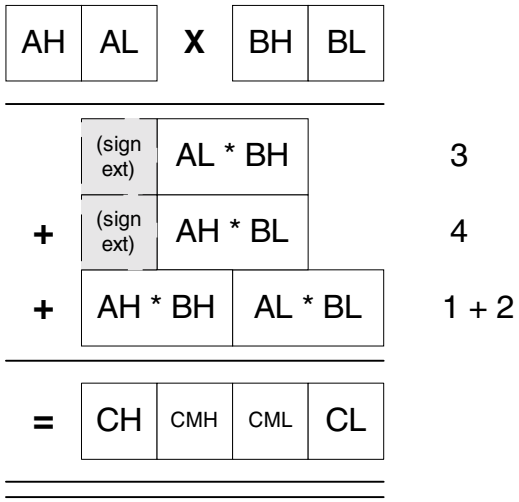

The 32-bit result of the unsigned multiplication of 672 and 1844 will now be in the registers R19:R18:R17:R16. If “muls16x16_32” is called instead of “mul16x16_32”, a signed multiplication will be executed. If “mul16x16_16” is called, the result will only be 16 bits long and will be stored in the register pair R17:R16. In this example, the 16-bit result will not be correct.

16-bit Multiply-accumulate Operation

Figure 63. 16-bit Multiplication, 32-bit Accumulated Result

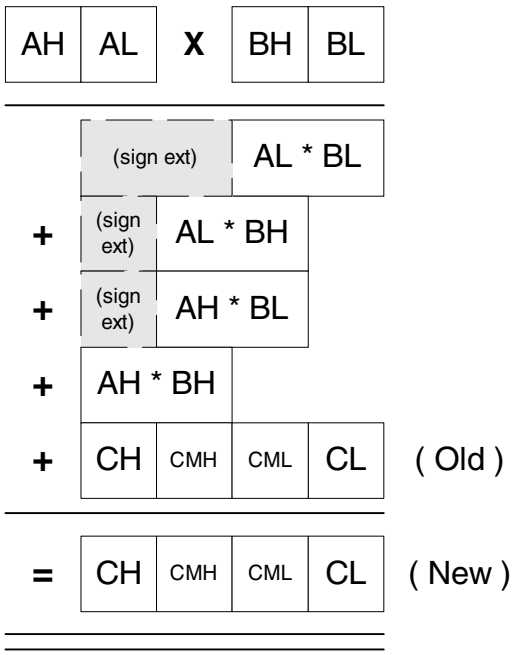

Using Fractional Numbers

Unsigned 8-bit fractional numbers use a format where numbers in the range [0, 2> are allowed. Bits 6 - 0 represent the fraction and bit 7 represents the integer part (0 or 1), i.e. a 1.7 format. The FMUL instruction performs the same operation as the MUL instruction, except that the result is left-shifted 1 bit so that the high byte of the 2-byte result will have the same 1.7 format as the operands (instead of a 2.6 format). Note that if the product is equal to or higher than 2, the result will not be correct.

To fully understand the format of the fractional numbers, a comparison with the integer number format is useful: Table 20 illustrates the two 8-bit unsigned numbers formats. Signed fractional numbers, like signed integers, use the familiar two's complement format. Numbers in the range [-1, 1> may be represented using this format.

If the byte "1011 0010" is interpreted as an unsigned integer, it will be interpreted as 128 + 32 + 16 + 2 = 178. On the other hand, if it is interpreted as an unsigned fractional number, it will be interpreted as 1 + 0.25 + 0.125 + 0.015625 = 1.390625. If the byte is assumed to be a signed number, it will be interpreted as 178 - 256 = -122 (integer) or as 1.390625 - 2 = -0.609375 (fractional number).

Table 35. Comparison of Integer and Fractional Formats

Bit Number	Unsigned Integer Bit Significance	Unsigned Fractional Number Bit Significance
7	$2^7 = 128$	$2^0 = 1$
6	$2^6 = 64$	$2^{-1} = 0.5$
5	$2^5 = 32$	$2^{-2} = 0.25$
4	$2^4 = 16$	$2^{-3} = 0.125$
3	$2^3 = 8$	$2^{-4} = 0.0625$
2	$2^2 = 4$	$2^{-5} = 0.3125$
1	$2^1 = 2$	$2^{-6} = 0.015625$
0	$2^0 = 1$	$2^{-7} = 0.0078125$

Using the FMUL, FMULS and FMULSU instructions should not be more complex than the MUL, MULS and MULSU instructions. However, one potential problem is to assign fractional variables right values in a simple way. The fraction 0.75 (= 0.5 + 0.25) will, for example, be “0110 0000” if 8 bits are used.

To convert a positive fractional number in the range [0, 2> (for example 1.8125) to the format used in the AVR, the following algorithm, illustrated by an example, should be used:

Is there a “1” in the number?

Yes, 1.8125 is higher than or equal to 1.

Byte is now “1xxx xxxx”

Is there a “0.5” in the rest?

0.8125 / 0.5 = 1.625

Yes, 1.625 is higher than or equal to 1.

Byte is now “11xx xxxx”

Is there a “0.25” in the rest?

0.625 / 0.5 = 1.25

Yes, 1.25 is higher than or equal to 1.

Byte is now “111x xxxx”

Is there a “0.125” in the rest?

0.25 / 0.5 = 0.5

No, 0.5 is lower than 1.

Byte is now “1110 xxxx”

Is there a “0.0625” in the rest?

0.5 / 0.5 = 1

Yes, 1 is higher than or equal to 1.

Byte is now “1110 1xxx”

Since we do not have a rest, the remaining three bits will be zero, and the final result is “1110 1000”, which is 1 + 0.5 + 0.25 + 0.0625 = 1.8125.

To convert a negative fractional number, first add 2 to the number and then use the same algorithm as already shown.

16-bit fractional numbers use a format similar to that of 8-bit fractional numbers; the high 8 bits have the same format as the 8-bit format. The low 8 bits are only an increase of accuracy of the 8-bit format; while the 8-bit format has an accuracy of $\pm\ 2^{-8}$, the16-bit format has an accuracy of $\pm\ 2^{-16}$. Then again, the 32-bit fractional numbers are an increase of accuracy to the 16-bit fractional numbers. Note the important difference between integers and fractional numbers when extra byte(s) are used to store the number: while the accuracy of the numbers is increased when fractional numbers are used, the range of numbers that may be represented is extended when integers are used.

As mentioned earlier, using signed fractional numbers in the range [-1, 1> has one main advantage to integers: when multiplying two numbers in the range [-1, 1>, the result will be in the range [-1, 1], and an approximation (the highest byte(s)) of the result may be stored in the same number of bytes as the factors, with one exception: when both factors are -1, the product should be 1, but since the number 1 cannot be represented using this number format, the FMULS instruction will instead place the number -1 in R1:R0. The user should therefore assure that at least one of the operands is not -1 when using the FMULS instruction. The 16-bit x 16-bit fractional multiply also has this restriction.

Example 5 – Basic Usage 8-bit x 8-bit = 16-bit Signed Fractional Multiply

This example shows an assembly code that reads the port E input value and multiplies this value with a fractional constant (-0.625) before storing the result in register pair R17:R16.

```
in    r16,PINE      ; Read pin values
ldi   r17,$B0       ; Load -0.625 into r17
fmuls r16,r17       ; r1:r0 = r17 * r16
movw  r17:r16,r1:r0; Move the result to the r17:r16
                    ; register pair
```

Note that the usage of the FMULS (and FMUL) instructions is very similar to the usage of the MULS and MUL instructions.

Example 6 – Multiply-accumulate Operation

The example below uses data from the ADC. The ADC should be configured so that the format of the ADC result is compatible with the fractional two's complement format. For the ATmega83/163, this means that the ADLAR bit in the ADMUX I/O register is set and a differential channel is used. The ADC result is normalized to one.

```
ldi r23,$62         ; Load highbyte of
                    ; fraction 0.771484375
ldi r22,$C0         ; Load lowbyte of
                    ; fraction 0.771484375
in  r20,ADCL        ; Get lowbyte of ADC conversion
in  r21,ADCH        ; Get highbyte of ADC conversion
callfmac16x16_32    ;Call routine for signed fractional
                    ; multiply accumulate
```

The registers R19:R18:R17:R16 will be incremented with the result of the multiplication of 0.771484375 with the ADC conversion result. In this example, the ADC result is treated as a signed fraction number. We could also treat it as a signed integer and call it "mac16x16_32" instead of "fmac16x16_32". In this case, the 0.771484375 should be replaced with an integer.

Implementations

mul16x16_16

Description

Multiply of two 16-bit numbers with a 16-bit result.

Usage

R17:R16 = R23:R22 • R21:R20

Statistics

Cycles: 9 + ret

Words: 6 + ret

Register usage: R0, R1 and R16 to R23 (8 registers)(1)

Note: 1. Full orthogonality, i.e., any register pair can be used as long as the result and the two operands do not share register pairs. The routine is non-destructive to the operands.

```
mul16x16_16:
   mul   r22, r20        ; al * bl
   movw  r17:r16, r1:r0
   mul   r23, r20        ; ah * bl
   add   r17, r0
   mul   r21, r22        ; bh * al
   add   r17, r0
   ret
```

mul16x16_32

Description

Unsigned multiply of two 16-bit numbers with a 32-bit result.

Usage

R19:R18:R17:R16 = R23:R22 • R21:R20

Statistics

Cycles: 17 + ret

Words: 13 + ret

Register usage: R0 to R2 and R16 to R23 (11 registers)(1)

Note: 1. Full orthogonality, i.e., any register pair can be used as long as the result and the two operands do not share register pairs. The routine is non-destructive to the operands.

```
mul16x16_32:
   clr   r2
   mul   r23, r21        ; ah * bh
   movw  r19:r18, r1:r0
   mul   r22, r20        ; al * bl
   movw  r17:r16, r1:r0
   mul   r23, r20        ; ah * bl
   add   r17, r0
   adc   r18, r1
   adc   r19, r2
   mul   r21, r22        ; bh * al
   add   r17, r0
   adc   r18, r1
   adc   r19, r2
   ret
```

muls16x16_32

Description

Signed multiply of two 16-bit numbers with a 32-bit result.

Usage

R19:R18:R17:R16 = R23:R22 • R21:R20

Statistics

Cycles: 19 + ret

Words: 15 + ret

Register usage: R0 to R2 and R16 to R23 (11 registers)[1]

Note: 1. The routine is non-destructive to the operands.

```
muls16x16_32:
   clr   r2
   muls  r23, r21             ; (signed)ah * (signed)bh
   movw  r19:r18, r1:r0
   mul   r22, r20             ; al * bl
   movw  r17:r16, r1:r0
   mulsu r23, r20             ; (signed)ah * bl
   sbc   r19, r2              ; Sign extend
   add   r17, r0
   adc   r18, r1
   adc   r19, r2
   mulsu r21, r22             ; (signed)bh * al
   sbc   r19, r2              ; Sign Extend
   add   r17, r0
   adc   r18, r1
   adc   r19, r2
   ret
```

mac16x16_32

Description

Signed multiply-accumulate of two 16-bit numbers with a 32-bit result.

Usage

R19:R18:R17:R16 += R23:R22 • R21:R20

Statistics

Cycles: 23 + ret

Words: 19 + ret

Register usage: R0 to R2 and R16 to R23 (11 registers)

```
mac16x16_32:                  ; Register Usage Optimized
   clr   r2

   muls  r23, r21             ; (signed)ah * (signed)bh
   add   r18, r0
   adc   r19, r1

   mul   r22, r20             ; al * bl
   add   r16, r0
   adc   r17, r1
   adc   r18, r2
   adc   r19, r2
```

```
   mulsu r23, r20            ; (signed)ah * bl
   sbc   r19, r2
   add   r17, r0
   adc   r18, r1
   adc   r19, r2

   mulsu r21, r22            ; (signed)bh * al
   sbc   r19, r2             ; Sign extend
   add   r17, r0
   adc   r18, r1
   adc   r19, r2

   ret

mac16x16_32_method_B:        ; uses two temporary registers (r4,r5), Speed / Size
                             Optimized
                             ; but reduces cycles/words by 1
   clr   r2

   muls  r23, r21            ; (signed)ah * (signed)bh
   movw  r5:r4,r1:r0

   mul   r22, r20            ; al * bl

   add   r16, r0
   adc   r17, r1
   adc   r18, r4
   adc   r19, r5

mulsu r23, r20               ; (signed)ah * bl
   sbc   r19, r2             ; Sign extend
   add   r17, r0
   adc   r18, r1
   adc   r19, r2

   mulsu r21, r22            ; (signed)bh * al
   sbc   r19, r2             ; Sign extend
   add   r17, r0
   adc   r18, r1
   adc   r19, r2

   ret
```

fmuls16x16_32

Description

Signed fractional multiply of two 16-bit numbers with a 32-bit result.

Usage

R19:R18:R17:R16 = (R23:R22 • R21:R20) << 1

Statistics

Cycles: 20 + ret

Words: 16 + ret

Register usage: R0 to R2 and R16 to R23 (11 registers)[1]

Note: 1. The routine is non-destructive to the operands.

```
fmuls16x16_32:
   clr   r2
   fmuls r23, r21             ; ( (signed)ah * (signed)bh ) << 1
   movw  r19:r18, r1:r0
   fmul  r22, r20             ; ( al * bl ) << 1
   adc   r18, r2
   movw  r17:r16, r1:r0
   fmulsu   r23, r20          ; ( (signed)ah * bl ) << 1
   sbc   r19, r2              ; Sign extend
   add   r17, r0
   adc   r18, r1
   adc   r19, r2
   fmulsu   r21, r22          ; ( (signed)bh * al ) << 1
   sbc   r19, r2              ; Sign extend
   add   r17, r0
   adc   r18, r1
   adc   r19, r2
   ret
```

fmac16x16_32

Description

Signed fractional multiply-accumulate of two 16-bit numbers with a 32-bit result.

Usage

R19:R18:R17:R16 += (R23:R22 • R21:R20) << 1

Statistics

Cycles: 25 + ret

Words: 21 + ret

Register usage: R0 to R2 and R16 to R23 (11 registers)

```
fmac16x16_32:                 ; Register usage optimized
   clr   r2

   fmuls r23, r21             ; ( (signed)ah * (signed)bh ) << 1
   add   r18, r0
   adc   r19, r1

   fmul  r22, r20             ; ( al * bl ) << 1
   adc   r18, r2
   adc   r19, r2
   add   r16, r0
```

```
   adc   r17, r1
   adc   r18, r2
   adc   r19, r2

   fmulsu   r23, r20          ; ( (signed)ah * bl ) << 1
   sbc   r19, r2
   add   r17, r0
   adc   r18, r1
   adc   r19, r2

   fmulsu   r21, r22          ; ( (signed)bh * al ) << 1
   sbc   r19, r2
   add   r17, r0
   adc   r18, r1
   adc   r19, r2

   ret

fmac16x16_32_method_B         ; uses two temporary registers (r4,r5), speed/Size
                              optimized
                              ; but reduces cycles/words by 2
   clr   r2

   fmuls r23, r21             ; ( (signed)ah * (signed)bh ) << 1
   movw  r5:r4,r1:r0
   fmul  r22, r20             ; ( al * bl ) << 1
   adc   r4, r2

add   r16, r0
   adc   r17, r1
   adc   r18, r4
   adc   r19, r5
fmulsu   r23, r20             ; ( (signed)ah * bl ) << 1
   sbc   r19, r2
   add   r17, r0
   adc   r18, r1
   adc   r19, r2
   fmulsu   r21, r22          ; ( (signed)bh * al ) << 1
   sbc   r19, r2
   add   r17, r0
   adc   r18, r1
   adc   r19, r2

   ret
```

Comment on Implementations

All 16-bit x 16-bit = 32-bit functions implemented here start by clearing the R2 register, which is just used as a “dummy” register with the “add with carry” (ADC) and “subtract with carry” (SBC) operations. These operations do not alter the contents of the R2 register. If the R2 register is not used elsewhere in the code, it is not necessary to clear the R2 register each time these functions are called, but only once prior to the first call to one of the functions.

UARTs

The FPSLIC features two full duplex (separate receive and transmit registers) Universal Asynchronous Receiver and Transmitter (UART). The main features are:

- Baud-rate Generator Generates any Baud-rate
- High Baud-rates at Low XTAL Frequencies
- 8 or 9 Bits Data
- Noise Filtering
- Overrun Detection
- Framing Error Detection
- False Start Bit Detection
- Three Separate Interrupts on TX Complete, TX Data Register Empty and RX Complete
- Multi-processor Communication Mode
- Double Speed UART Mode

Data Transmission

A block schematic of the UART transmitter is shown in Figure 64. The two UARTs are identical and the functionality is described in general for the two UARTs.

Figure 64. UART Transmitter(1)

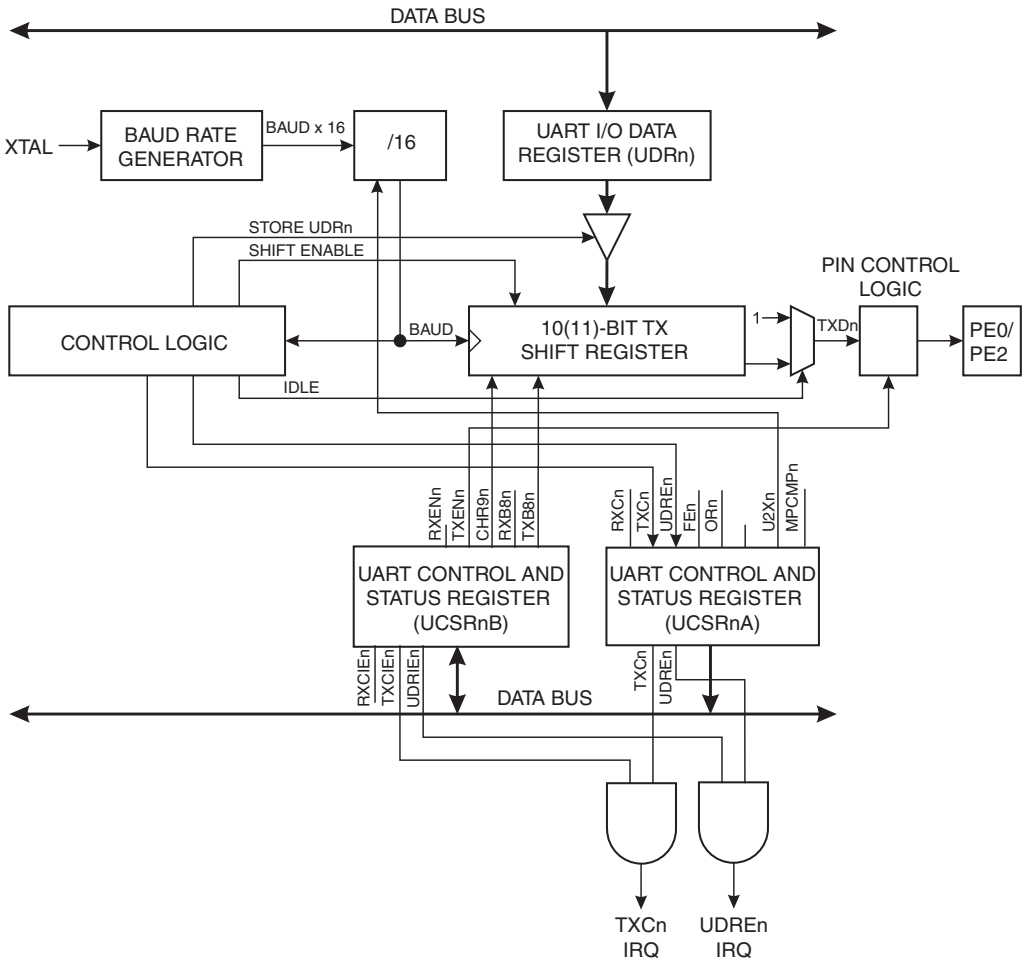

Note: 1. n = 0, 1

Data transmission is initiated by writing the data to be transmitted to the UART I/O Data Register, UDRn. Data is transferred from UDRn to the Transmit shift register when:

- A new character has been written to UDRn after the stop bit from the previous character has been shifted out. The shift register is loaded immediately.
- A new character has been written to UDRn before the stop bit from the previous character has been shifted out. The shift register is loaded when the stop bit of the character currently being transmitted has been shifted out.

If the 10(11)-bit Transmitter shift register is empty, data is transferred from UDRn to the shift register. At this time the UDREn (UART Data Register Empty) bit in the UART Control and Status Register, UCSRnA, is set. When this bit is set (one), the UART is ready to receive the next character. At the same time as the data is transferred from UDRn to the 10(11)-bit shift register, bit 0 of the shift register is cleared (start bit) and bit 9 or 10 is set (stop bit). If a 9-bit data word is selected (the CHR9n bit in the UART Control and Status Register, UCSRnB is set), the TXB8 bit in UCSRnB is transferred to bit 9 in the Transmit shift register.

On the Baud-rate clock following the transfer operation to the shift register, the start bit is shifted out on the TXDn pin. Then follows the data, LSB first. When the stop bit has been shifted out, the shift register is loaded if any new data has been written to the UDRn during the transmission. During loading, UDREn is set. If there is no new data in the UDRn register to send when the stop bit is shifted out, the UDREn flag will remain set until UDRn is written again. When no new data has been written, and the stop bit has been present on TXDn for one bit length, the TX Complete flag, TXCn, in UCSRnA is set.

The TXENn bit in UCSRnB enables the UART transmitter when set (one). When this bit is cleared (zero), the PE0 (UART0) or PE2 (UART1) pin can be used for general I/O. When TXENn is set, the UART Transmitter will be connected to PE0 (UART0) or PE2 (UART1), which is forced to be an output pin regardless of the setting of the DDE0 bit in DDRE (UART0) or DDE2 in DDRE (UART1).

Data Reception

Figure 65 shows a block diagram of the UART Receiver.

Figure 65. UART Receiver[1]

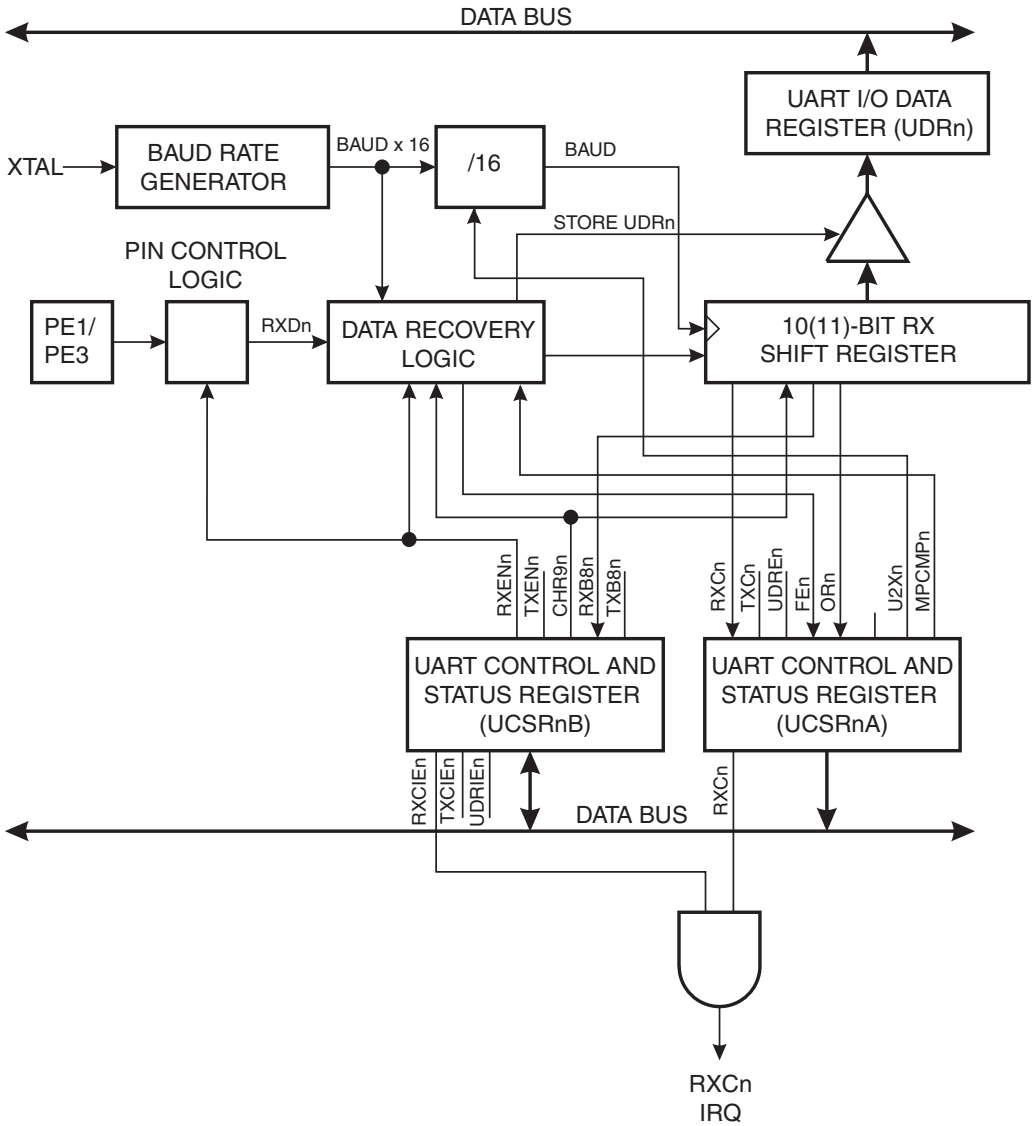

Note: 1. n = 0, 1

The receiver front-end logic samples the signal on the RXDn pin at a frequency 16 times the baud-rate. While the line is idle, one single sample of logic 0 will be interpreted as the falling edge of a start bit, and the start bit detection sequence is initiated. Let sample 1 denote the first zero-sample. Following the 1-to-0 transition, the receiver samples the RXDn pin at samples 8, 9 and 10. If two or more of these three samples are found to be logic 1s, the start bit is rejected as a noise spike and the receiver starts looking for the next 1-to-0 transition.

If however, a valid start bit is detected, sampling of the data bits following the start bit is performed. These bits are also sampled at samples 8, 9 and 10. The logical value found in at least two of the three samples is taken as the bit value. All bits are shifted into the transmitter shift register as they are sampled. Sampling of an incoming character is shown in Figure 66. Note that the description above is not valid when the UART transmission speed is doubled. See “Double Speed Transmission” on page 128 for a detailed description.

Figure 66. Sampling Received Data(1)

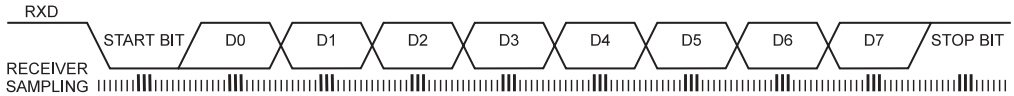

Note: 1. This figure is not valid when the UART speed is doubled. See “Double Speed Transmission” on page 128 for a detailed description.

When the stop bit enters the receiver, the majority of the three samples must be one to accept the stop bit. If two or more samples are logic 0s, the Framing Error (FEn) flag in the UART Control and Status Register (UCSRnA) is set. Before reading the UDRn register, the user should always check the FEn bit to detect Framing Errors.

Whether or not a valid stop bit is detected at the end of a character reception cycle, the data is transferred to UDRn and the RXCn flag in UCSRnA is set. UDRn is in fact two physically separate registers, one for transmitted data and one for received data. When UDRn is read, the Receive Data register is accessed, and when UDRn is written, the Transmit Data register is accessed. If the 9-bit data word is selected (the CHR9n bit in the UART Control and Status Register, UCSRnB is set), the RXB8n bit in UCSRnB is loaded with bit 9 in the Transmit shift register when data is transferred to UDRn.

If, after having received a character, the UDRn register has not been read since the last receive, the OverRun (ORn) flag in UCSRnB is set. This means that the last data byte shifted into to the shift register could not be transferred to UDRn and has been lost. The ORn bit is buffered, and is updated when the valid data byte in UDRn is read. Thus, the user should always check the ORn bit after reading the UDRn register in order to detect any overruns if the baud-rate is High or CPU load is High.

When the RXEN bit in the UCSRnB register is cleared (zero), the receiver is disabled. This means that the PE1 (n=0) or PE3 (n=1) pin can be used as a general I/O pin. When $RXEN_n$ is set, the UART Receiver will be connected to PE1 (UART0) or PE3 (UART1), which is forced to be an input pin regardless of the setting of the DDE1 in DDRE (UART0) or DDB2 bit in DDRB (UART1). When PE1 (UART0) or PE3 (UART1) is forced to input by the UART, the PORTE1 (UART0) or PORTE3 (UART1) bit can still be used to control the pull-up resistor on the pin.

When the CHR9n bit in the UCSRnB register is set, transmitted and received characters are 9 bits long plus start and stop bits. The 9th data bit to be transmitted is the TXB8n bit in UCSRnB register. This bit must be set to the wanted value before a transmission is initiated by writing to the UDRn register. The 9th data bit received is the RXB8n bit in the UCSRnB register.

Multi-processor Communication Mode

The Multi-processor Communication Mode enables several Slave MCUs to receive data from a Master MCU. This is done by first decoding an address byte to find out which MCU has been addressed. If a particular Slave MCU has been addressed, it will receive the following data bytes as normal, while the other Slave MCUs will ignore the data bytes until another address byte is received.

For an MCU to act as a Master MCU, it should enter 9-bit transmission mode (CHR9n in UCSRnB set). The 9-bit must be one to indicate that an address byte is being transmitted, and zero to indicate that a data byte is being transmitted.

For the Slave MCUs, the mechanism appears slightly different for 8-bit and 9-bit Reception mode. In 8-bit Reception mode (CHR9n in UCSRnB cleared), the stop bit is one for an address byte and zero for a data byte. In 9-bit Reception mode (CHR9n in UCSRnB set), the 9-bit is one for an address byte and zero for a data byte, whereas the stop bit is always High.

The following procedure should be used to exchange data in Multi-processor Communication mode:

1. All Slave MCUs are in Multi-processor Communication Mode (MPCMn in UCSRnA is set).
2. The Master MCU sends an address byte, and all Slaves receive and read this byte. In the Slave MCUs, the RXCn flag in UCSRnA will be set as normal.
3. Each Slave MCU reads the UDRn register and determines if it has been selected. If so, it clears the MPCMn bit in UCSRnA, otherwise it waits for the next address byte.
4. For each received data byte, the receiving MCU will set the receive complete flag (RXCn in UCSRnA. In 8-bit mode, the receiving MCU will also generate a framing error (FEn in UCSRnA set), since the stop bit is zero. The other Slave MCUs, which still have the MPCMn bit set, will ignore the data byte. In this case, the UDRn register and the RXCn, FEn, or flags will not be affected.
5. After the last byte has been transferred, the process repeats from step 2.

UART Control

UART0 I/O Data Register – UDR0

Bit	7	6	5	4	3	2	1	0	
$0C ($2C)	MSB							LSB	UDR0
Read/Write	R/W	R/W	R/W	R/W	R/W	R/W	R/W	R/W	
Initial Value	0	0	0	0	0	0	0	0	

UART1 I/O Data Register – UDR1

Bit	7	6	5	4	3	2	1	0	
$03 ($23)	MSB							LSB	UDR1
Read/Write	R/W	R/W	R/W	R/W	R/W	R/W	R/W	R/W	
Initial Value	0	0	0	0	0	0	0	0	

The UDRn register is actually two physically separate registers sharing the same I/O address. When writing to the register, the UART Transmit Data register is written. When reading from UDRn, the UART Receive Data register is read.

UART0 Control and Status Registers – UCSR0A

Bit	7	6	5	4	3	2	1	0	
$0B ($2B)	RXC0	TXC0	UDRE0	FE0	OR0	-	U2X0	MPCM0	UCSR0A
Read/Write	R	R/W	R	R	R	R	R/W	R/W	
Initial Value	0	0	1	0	0	0	0	0	

UART1 Control and Status Registers – UCSR1A

Bit	7	6	5	4	3	2	1	0	
$02 ($22)	RXC1	TXC1	UDRE1	FE1	OR1	-	U2X1	MPCM1	UCSR1A
Read/Write	R	R/W	R	R	R	R	R/W	R/W	
Initial Value	0	0	1	0	0	0	0	0	

- **Bit 7 - RXC0/RXC1: UART Receive Complete**

This bit is set (one) when a received character is transferred from the Receiver Shift register to UDRn. The bit is set regardless of any detected framing errors. When the RXCIEn bit in UCSRnB is set, the UART Receive Complete interrupt will be executed when RXCn is set (one). RXCn is cleared by reading UDRn. When interrupt-driven data reception is used, the UART Receive Complete Interrupt routine must read UDRn in order to clear RXCn, otherwise a new interrupt will occur once the interrupt routine terminates.

- **Bit 6 - TXC0/TXC1: UART Transmit Complete**

This bit is set (one) when the entire character (including the stop bit) in the Transmit Shift register has been shifted out and no new data has been written to UDRn. This flag is especially useful in half-duplex communications interfaces, where a transmitting application must enter receive mode and free the communications bus immediately after completing the transmission.

When the TXCIEn bit in UCSRnB is set, setting of TXCn causes the UART Transmit Complete interrupt to be executed. TXCn is cleared by the hardware when executing the corresponding interrupt handling vector. Alternatively, the TXCn bit is cleared (zero) by writing a logic 1 to the bit.

- **Bit 5 - UDRE0/UDRE1: UART Data Register Empty**

This bit is set (one) when a character written to UDRn is transferred to the Transmit shift register. Setting of this bit indicates that the transmitter is ready to receive a new character for transmission.

When the UDRIEn bit in UCSRnB is set, the UART Transmit Complete interrupt will be executed as long as UDREn is set and the global interrupt enable bit in SREG is set. UDREn is cleared by writing UDRn. When interrupt-driven data transmittal is used, the UART Data Register Empty Interrupt routine must write UDRn in order to clear UDREn, otherwise a new interrupt will occur once the interrupt routine terminates.

UDREn is set (one) during reset to indicate that the transmitter is ready.

- **Bit 4 - FE0/FE1: Framing Error**

This bit is set if a Framing Error condition is detected, i.e., when the stop bit of an incoming character is zero.

The FEn bit is cleared when the stop bit of received data is one.

- **Bit 3 - OR0/OR1: OverRun**

This bit is set if an Overrun condition is detected, i.e., when a character already present in the UDRn register is not read before the next character has been shifted into the Receiver Shift register. The ORn bit is buffered, which means that it will be set once the valid data still in UDRn is read.

The ORn bit is cleared (zero) when data is received and transferred to UDRn.

- **Bit 2 - Res: Reserved Bit**

This bit is reserved in the AT94K and will always read as zero.

- **Bits 1 - U2X0/U2X1: Double the UART Transmission Speed**

When this bit is set (one) the UART speed will be doubled. This means that a bit will be transmitted/received in eight CPU clock periods instead of 16 CPU clock periods. For a detailed description, see “Double Speed Transmission” on page 128”.

- **Bit 0 - MPCM0/MPCM1: Multi-processor Communication Mode**

This bit is used to enter Multi-processor Communication Mode. The bit is set when the Slave MCU waits for an address byte to be received. When the MCU has been addressed, the MCU switches off the MPCMn bit, and starts data reception.

For a detailed description, see “Multi-processor Communication Mode” on page 123.

UART0 Control and Status Registers – UCSR0B

Bit	7	6	5	4	3	2	1	0	
$0A ($2A)	**RXCIE0**	**TXCIE0**	**UDRIE0**	**RXEN0**	**TXEN0**	**CHR90**	**RXB80**	**TXB80**	**UCSR0B**
Read/Write	R/W	R/W	R/W	R/W	R/W	R/W	R	R/W	
Initial Value	0	0	0	0	0	0	1	0	

UART1 Control and Status Registers – UCSR1B

Bit	7	6	5	4	3	2	1	0	
$01 ($21)	**RXCIE1**	**TXCIE1**	**UDRIE1**	**RXEN1**	**TXEN1**	**CHR91**	**RXB81**	**TXB81**	**UCSR1B**
Read/Write	R/W	R/W	R/W	R/W	R/W	R/W	R	R/W	
Initial Value	0	0	0	0	0	0	1	0	

- **Bit 7 - RXCIE0/RXCIE1: RX Complete Interrupt Enable**

When this bit is set (one), a setting of the RXCn bit in UCSRnA will cause the Receive Complete interrupt routine to be executed provided that global interrupts are enabled.

- **Bit 6 - TXCIE0/TXCIE1: TX Complete Interrupt Enable**

When this bit is set (one), a setting of the TXCn bit in UCSRnA will cause the Transmit Complete interrupt routine to be executed provided that global interrupts are enabled.

- **Bit 5 - UDRIE0/UDREI1: UART Data Register Empty Interrupt Enable**

When this bit is set (one), a setting of the UDREn bit in UCSRnA will cause the UART Data Register Empty interrupt routine to be executed provided that global interrupts are enabled.

- **Bit 4 - RXEN0/RXEN1: Receiver Enable**

This bit enables the UART receiver when set (one). When the receiver is disabled, the TXCn, ORn and FEn status flags cannot become set. If these flags are set, turning off RXENn does not cause them to be cleared.

- **Bit 3 - TXEN0/TXEN1: Transmitter Enable**

This bit enables the UART transmitter when set (one). When disabling the transmitter while transmitting a character, the transmitter is not disabled before the character in the shift register plus any following character in UDRn has been completely transmitted.

- **Bit 2 - CHR90/CHR91: 9-bit Characters**

When this bit is set (one) transmitted and received characters are 9-bit long plus start and stop bits. The 9-bit is read and written by using the RXB8n and TXB8n bits in UCSRnB, respectively. The 9th data bit can be used as an extra stop bit or a parity bit.

- **Bit 1 - RXB80/RXB81: Receive Data Bit 8**

When CHR9n is set (one), RXB8n is the 9th data bit of the received character.

- **Bit 0 - TXB80/TXB81: Transmit Data Bit 8**

When CHR9n is set (one), TXB8n is the 9th data bit in the character to be transmitted.

Baud-rate Generator

The baud-rate generator is a frequency divider which generates baud-rates according to the following equation(1):

$$\text{BAUD} = \frac{f_{CK}}{16(\text{UBR} + 1)}$$

- BAUD = Baud-rate
- f_{CK} = Crystal Clock Frequency
- UBR = Contents of the UBRRHI and UBRRn Registers, (0 - 4095)

Note: 1. This equation is not valid when the UART transmission speed is doubled. See “Double Speed Transmission” on page 128 for a detailed description.

For standard crystal frequencies, the most commonly used baud-rates can be generated by using the UBR settings in Table 36. UBR values which yield an actual baud-rate differing less than 2% from the target baud-rate, are bold in the table. However, using baud-rates that have more than 1% error is not recommended. High error ratings give less noise resistance.

Table 36. UBR Settings at Various Crystal Frequencies

Clock MHz	UBRRHI 7:4 or 3:0	UBRRn	UBR HEX	UBR	Actual Freq	Desired Freq.	% Error
1	**0000**	**00011001**	**019**	**25**	**2404**	**2400**	**0.2**
	0000	**00001100**	**00C**	**12**	**4808**	**4800**	**0.2**
	0000	00000110	006	6	8929	9600	7.5
	0000	00000011	003	3	15625	14400	7.8
	0000	00000010	002	2	20833	19200	7.8
	0000	00000001	001	1	31250	28880	7.6
	0000	00000001	001	1	31250	38400	22.9
	0000	00000000	000	0	62500	57600	7.8
	0000	00000000	000	0	62500	76800	22.9
	0000	00000000	000	0	62500	115200	84.3

Clock MHz	UBRRHI 7:4 or 3:0	UBRRn	UBR HEX	UBR	Actual Freq	Desired Freq.	% Error
1.8432	**0000**	**00101111**	**02F**	**47**	**2400**	**2400**	**0.0**
	0000	**00010111**	**017**	**23**	**4800**	**4800**	**0.0**
	0000	**00001011**	**00B**	**11**	**9600**	**9600**	**0.0**
	0000	**00000111**	**007**	**7**	**14400**	**14400**	**0.0**
	0000	**00000101**	**005**	**5**	**19200**	**19200**	**0.0**
	0000	**00000011**	**003**	**3**	**28800**	**28880**	**0.3**
	0000	**00000010**	**002**	**2**	**38400**	**38400**	**0.0**
	0000	**00000001**	**001**	**1**	**57600**	**57600**	**0.0**
	0000	00000001	001	1	57600	76800	33.3
	0000	**00000000**	**000**	**0**	**115200**	**115200**	**0.0**

Clock MHz	UBRRHI 7:4 or 3:0	UBRRn	UBR HEX	UBR	Actual Freq	Desired Freq.	% Error
9.216	**0000**	**11101111**	**0EF**	**239**	**2400**	**2400**	**0.0**
	0000	**01110111**	**077**	**119**	**4800**	**4800**	**0.0**
	0000	**00111011**	**03B**	**59**	**9600**	**9600**	**0.0**
	0000	**00100111**	**027**	**39**	**14400**	**14400**	**0.0**
	0000	**00011101**	**01D**	**29**	**19200**	**19200**	**0.0**
	0000	**00010011**	**013**	**19**	**28800**	**28880**	**0.3**
	0000	**00001110**	**00E**	**14**	**38400**	**38400**	**0.0**
	0000	**00001001**	**009**	**9**	**57600**	**57600**	**0.0**
	0000	00000111	007	7	72000	76800	6.7
	0000	**00000100**	**004**	**4**	**115200**	**115200**	**0.0**
	0000	00000001	001	1	288000	230400	20.0
	0000	00000000	000	0	576000	460800	20.0
	0000	00000000	000	0	576000	912600	58.4

Clock MHz	UBRRHI 7:4 or 3:0	UBRRn	UBR HEX	UBR	Actual Freq	Desired Freq.	% Error
18.432	**0001**	**11011111**	**1DF**	**479**	**2400**	**2400**	**0.0**
	0000	**11101111**	**0EF**	**239**	**4800**	**4800**	**0.0**
	0000	**01110111**	**077**	**119**	**9600**	**9600**	**0.0**
	0000	**01001111**	**04F**	**79**	**14400**	**14400**	**0.0**
	0000	**00111011**	**03B**	**59**	**19200**	**19200**	**0.0**
	0000	**00100111**	**027**	**39**	**28800**	**28880**	**0.3**
	0000	**00011101**	**01D**	**29**	**38400**	**38400**	**0.0**
	0000	**00010011**	**013**	**19**	**57600**	**57600**	**0.0**
	0000	**00001110**	**00E**	**14**	**76800**	**76800**	**0.0**
	0000	**00001001**	**009**	**9**	**115200**	**115200**	**0.0**
	0000	**00000100**	**004**	**4**	**230400**	**230400**	**0.0**
	0000	00000001	001	1	576000	460800	20.0
	0000	00000000	000	0	1152000	912600	20.8

Clock MHz	UBRRHI 7:4 or 3:0	UBRRn	UBR HEX	UBR	Actual Freq	Desired Freq.	% Error
25.576	**0010**	**10011001**	**299**	**665**	**2400**	**2400**	**0.0**
	0001	**01001100**	**14C**	**332**	**4800**	**4800**	**0.0**
	0000	**10100110**	**0A6**	**166**	**9572**	**9600**	**0.3**
	0000	**01101110**	**06E**	**110**	**14401**	**14400**	**0.0**
	0000	**01010010**	**052**	**82**	**19259**	**19200**	**0.3**
	0000	**00110110**	**036**	**54**	**29064**	**28880**	**0.6**
	0000	**00101001**	**029**	**41**	**38060**	**38400**	**0.9**
	0000	**00011011**	**01B**	**27**	**57089**	**57600**	**0.9**
	0000	**00010100**	**014**	**20**	**76119**	**76800**	**0.9**
	0000	**00001101**	**00D**	**13**	**114179**	**115200**	**0.9**
	0000	**00000110**	**006**	**6**	**228357**	**230400**	**0.9**
	0000	00000011	003	3	399625	460800	15.3
	0000	00000001	001	1	799250	912600	14.2

Clock MHz	UBRRHI 7:4 or 3:0	UBRRn	UBR HEX	UBR	Actual Freq	Desired Freq.	% Error
40	**0100**	**00010001**	**411**	**1041**	**2399**	**2400**	**0.0**
	0010	**00001000**	**208**	**520**	**4798**	**4800**	**0.0**
	0001	**00000011**	**103**	**259**	**9615**	**9600**	**0.2**
	0000	**10101100**	**0AC**	**172**	**14451**	**14400**	**0.4**
	0000	**10000001**	**081**	**129**	**19231**	**19200**	**0.2**
	0000	**01010110**	**056**	**86**	**28736**	**28880**	**0.5**
	0000	**01000000**	**040**	**64**	**38462**	**38400**	**0.2**
	0000	**00101010**	**02A**	**42**	**58140**	**57600**	**0.9**
	0000	00100000	020	32	75758	76800	1.4
	0000	00010101	015	21	113636	115200	1.4
	0000	00001010	00A	10	227273	230400	1.4
	0000	00000100	004	4	500000	460800	7.8
	0000	00000010	002	2	833333	912600	9.5

UART0 and UART1 High Byte Baud-rate Register UBRRHI

Bit	7	6	5	4	3	2	1	0	
$20 ($40)	**MSB1**			**LSB1**	**MSB0**			**LSB0**	**UBRRHI**
Read/Write	R/W	R/W	R/W	R/W	R/W	R/W	R/W	R/W	
Initial Value	0	0	0	0	0	0	0	0	

The UART baud register is a 12-bit register. The 4 most significant bits are located in a separate register, UBRRHI. Note that both UART0 and UART1 share this register. Bit 7 to bit 4 of UBRRHI contain the 4 most significant bits of the UART1 baud register. Bit 3 to bit 0 contain the 4 most significant bits of the UART0 baud register.

UART0 Baud-rate Register Low Byte – UBRR0

Bit	7	6	5	4	3	2	1	0	
$09 ($29)	**MSB**							**LSB**	**UBRR0**
Read/Write	R/W	R/W	R/W	R/W	R/W	R/W	R/W	R/W	
Initial Value	0	0	0	0	0	0	0	0	

UART1 Baud-rate Register Low Byte – UBRR1

Bit	7	6	5	4	3	2	1	0	
$00 ($20)	**MSB**							**LSB**	**UBRR1**
Read/Write	R/W	R/W	R/W	R/W	R/W	R/W	R/W	R/W	
Initial Value	0	0	0	0	0	0	0	0	

UBRRn stores the 8 least significant bits of the UART baud-rate register.

Double Speed Transmission

The FPSLIC provides a separate UART mode that allows the user to double the communication speed. By setting the U2X bit in UART Control and Status Register UCSRnA, the UART speed will be doubled. The data reception will differ slightly from normal mode. Since the speed is doubled, the receiver front-end logic samples the signals on the RXDn pin at a frequency 8 times the baud-rate. While the line is idle, one single sample of logic 0 will be interpreted as the falling edge of a start bit, and the start bit detection sequence is initiated. Let sample 1 denote the first zero-sample. Following the 1-to-0 transition, the receiver samples the RXDn pin at samples 4, 5 and 6. If two or more of these three samples are found to be logic 1s, the start bit is rejected as a noise spike and the receiver starts looking for the next 1-to-0 transition.

If however, a valid start bit is detected, sampling of the data bits following the start bit is performed. These bits are also sampled at samples 4, 5 and 6. The logical value found in at least two of the three samples is taken as the bit value. All bits are shifted into the transmitter shift register as they are sampled. Sampling of an incoming character is shown in Figure 67.

Figure 67. Sampling Received Data when the Transmission Speed is Doubled

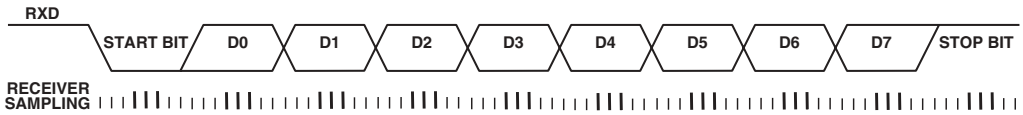

The Baud-rate Generator in Double UART Speed Mode

Note that the baud-rate equation is different from the equation(1) at page 126 when the UART speed is doubled:

$$\text{BAUD} = \frac{f_{CK}}{8(\text{UBR} + 1)}$$

- BAUD = Baud-rate
- f_{CK}= Crystal Clock Frequency
- UBR = Contents of the UBRRHI and UBRRn Registers, (0 - 4095)

Note: 1. This equation is only valid when the UART transmission speed is doubled.

For standard crystal frequencies, the most commonly used baud-rates can be generated by using the UBR settings in Table 36. UBR values which yield an actual baud-rate differing less than 1.5% from the target baud-rate, are bold in the table. However since the number of samples are reduced and the system clock might have some variance (this applies especially when using resonators), it is recommended that the baud-rate error is less than 0.5%. See Table 37 for the UBR settings at various crystal frequencies in double UART speed mode.

Table 37. UBR Settings at Various Crystal Frequencies in Double UART Speed Mode

Clock MHz	UBRRHI 7:4 or 3:0	UBRRn	UBR HEX	UBR	Actual Freq	Desired Freq.	% Error
1	**0000**	**00110011**	**033**	**51**	**2404**	**2400**	**0.2**
	0000	**00011001**	**019**	**25**	**4808**	**4800**	**0.2**
	0000	**00001100**	**00C**	**12**	**9615**	**9600**	**0.2**
	0000	00001000	008	8	13889	14400	3.7
	0000	00000110	006	6	17857	19200	7.5
	0000	00000011	003	3	31250	28880	7.6
	0000	00000010	002	2	41667	38400	7.8
	0000	00000001	001	1	62500	57600	7.8
	0000	00000001	001	1	62500	76800	22.9
	0000	00000000	000	0	125000	115200	7.8

Clock MHz	UBRRHI 7:4 or 3:0	UBRRn	UBR HEX	UBR	Actual Freq	Desired Freq.	% Error
1.843	**0000**	**01011111**	**05F**	**95**	**2400**	**2400**	**0.0**
	0000	**00101111**	**02F**	**47**	**4800**	**4800**	**0.0**
	0000	**00010111**	**017**	**23**	**9600**	**9600**	**0.0**
	0000	**00001111**	**00F**	**15**	**14400**	**14400**	**0.0**
	0000	**00001011**	**00B**	**11**	**19200**	**19200**	**0.0**
	0000	**00000111**	**007**	**7**	**28800**	**28880**	**0.3**
	0000	**00000101**	**005**	**5**	**38400**	**38400**	**0.0**
	0000	**00000011**	**003**	**3**	**57600**	**57600**	**0.0**
	0000	**00000010**	**002**	**2**	**76800**	**76800**	**0.0**
	0000	**00000001**	**001**	**1**	**115200**	**115200**	**0.0**

Clock MHz	UBRRHI 7:4 or 3:0	UBRRn	UBR HEX	UBR	Actual Freq	Desired Freq.	% Error
9.216	**0001**	**11011111**	**1DF**	**479**	**2400**	**2400**	**0.0**
	0000	**11101111**	**0EF**	**239**	**4800**	**4800**	**0.0**
	0000	**01110111**	**077**	**119**	**9600**	**9600**	**0.0**
	0000	**01001111**	**04F**	**79**	**14400**	**14400**	**0.0**
	0000	**00111011**	**03B**	**59**	**19200**	**19200**	**0.0**
	0000	**00100111**	**027**	**39**	**28800**	**28880**	**0.3**
	0000	**00011101**	**01D**	**29**	**38400**	**38400**	**0.0**
	0000	**00010011**	**013**	**19**	**57600**	**57600**	**0.0**
	0000	**00001110**	**00E**	**14**	**76800**	**76800**	**0.0**
	0000	**00001001**	**009**	**9**	**115200**	**115200**	**0.0**
	0000	**00000100**	**004**	**4**	**230400**	**230400**	**0.0**
	0000	00000010	002	2	384000	460800	20.0
	0000	00000000	000	0	1152000	912600	20.8

Clock MHz	UBRRHI 7:4 or 3:0	UBRRn	UBR HEX	UBR	Actual Freq	Desired Freq.	% Error
18.43	**0011**	**10111111**	**3BF**	**959**	**2400**	**2400**	**0.0**
	0001	**11011111**	**1DF**	**479**	**4800**	**4800**	**0.0**
	0000	**11101111**	**0EF**	**239**	**9600**	**9600**	**0.0**
	0000	**10011111**	**09F**	**159**	**14400**	**14400**	**0.0**
	0000	**01110111**	**077**	**119**	**19200**	**19200**	**0.0**
	0000	**01001111**	**04F**	**79**	**28800**	**28880**	**0.3**
	0000	**00111011**	**03B**	**59**	**38400**	**38400**	**0.0**
	0000	**00100111**	**027**	**39**	**57600**	**57600**	**0.0**
	0000	**00011101**	**01D**	**29**	**76800**	**76800**	**0.0**
	0000	**00010011**	**013**	**19**	**115200**	**115200**	**0.0**
	0000	**00001001**	**009**	**9**	**230400**	**230400**	**0.0**
	0000	**00000100**	**004**	**4**	**460800**	**460800**	**0.0**
	0000	00000010	002	2	**768000**	912600	18.8

Clock MHz	UBRRHI 7:4 or 3:0	UBRRn	UBR HEX	UBR	Actual Freq	Desired Freq.	% Error
25.576	**0101**	**00110011**	**533**	**1331**	**2400**	**2400**	**0.0**
	0010	**10011001**	**299**	**665**	**4800**	**4800**	**0.0**
	0001	**01001110**	**14E**	**334**	**9543**	**9600**	**0.6**
	0000	**11011101**	**0DD**	**221**	**14401**	**14400**	**0.0**
	0000	**10100110**	**0A6**	**166**	**19144**	**19200**	**0.3**
	0000	**01101110**	**06E**	**110**	**28802**	**28880**	**0.3**
	0000	**01010010**	**052**	**82**	**38518**	**38400**	**0.3**
	0000	00110111	037	55	57089	57600	0.9
	0000	00101001	029	41	76119	76800	0.9
	0000	00011011	01B	27	114179	115200	0.9
	0000	00001101	00D	13	228357	230400	0.9
	0000	00000110	006	6	456714	460800	0.9
	0000	00000011	003	3	799250	912600	14.2

Clock MHz	UBRRHI 7:4 or 3:0	UBRRn	UBR HEX	UBR	Actual Freq	Desired Freq.	% Error
40	**1000**	**00100010**	**822**	**2082**	**2400**	**2400**	**0.0**
	0100	**00010001**	**411**	**1041**	**4798**	**4800**	**0.0**
	0010	**00001000**	**208**	**520**	**9597**	**9600**	**0.0**
	0001	**01011010**	**15A**	**346**	**14409**	**14400**	**0.1**
	0001	**00000011**	**103**	**259**	**19231**	**19200**	**0.2**
	0000	**10101100**	**0AC**	**172**	**28902**	**28880**	**0.1**
	0000	**10000001**	**081**	**129**	**38462**	**38400**	**0.2**
	0000	**01010110**	**056**	**86**	**57471**	**57600**	**0.2**
	0000	**01000000**	**040**	**64**	**76923**	**76800**	**0.2**
	0000	00101010	02A	42	116279	115200	0.9
	0000	00010101	015	21	227273	230400	1.4
	0000	00001010	00A	10	454545	460800	1.4
	0000	00000100	004	4	1000000	912600	8.7

2-wire Serial Interface (Byte Oriented)

The 2-wire Serial Bus is a bi-directional two-wire serial communication standard. It is designed primarily for simple but efficient integrated circuit (IC) control. The system is comprised of two lines, SCL (Serial Clock) and SDA (Serial Data) that carry information between the ICs connected to them. Various communication configurations can be designed using this bus.
Figure 68 shows a typical 2-wire Serial Bus configuration. Any device connected to the bus can be Master or Slave.

Figure 68. 2-wire Serial Bus Configuration

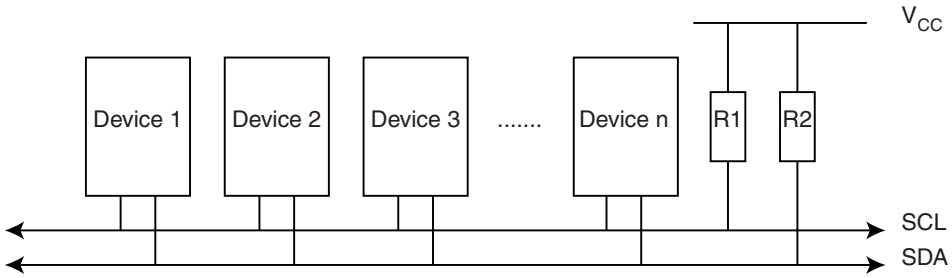

The 2-wire Serial Interface provides a serial interface that meets the 2-wire Serial Bus specification and supports Master/Slave and Transmitter/Receiver operation at up to 400 kHz bus clock rate. The 2-wire Serial Interface has hardware support for the 7-bit addressing, but is easily extended to 10-bit addressing format in software. When operating in 2-wire Serial mode, i.e., when TWEN is set, a glitch filter is enabled for the input signals from the pins SCL and SDA, and the output from these pins are slew-rate controlled. The 2-wire Serial Interface is byte oriented. The operation of the serial 2-wire Serial Bus is shown as a pulse diagram in Figure 69, including the START and STOP conditions and generation of ACK signal by the bus receiver.

Figure 69. 2-wire Serial Bus Timing Diagram

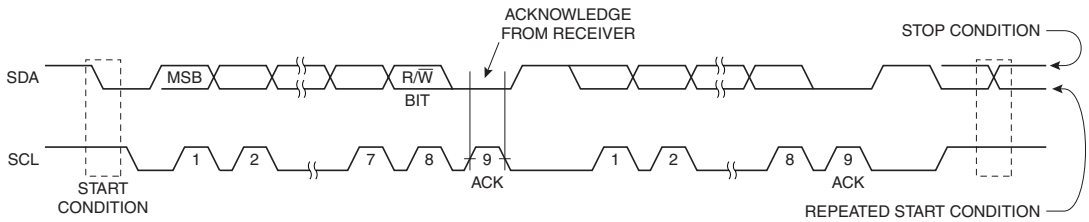

The block diagram of the 2-wire Serial Bus interface is shown in Figure 70.

Figure 70. Block diagram of the 2-wire Serial Bus Interface

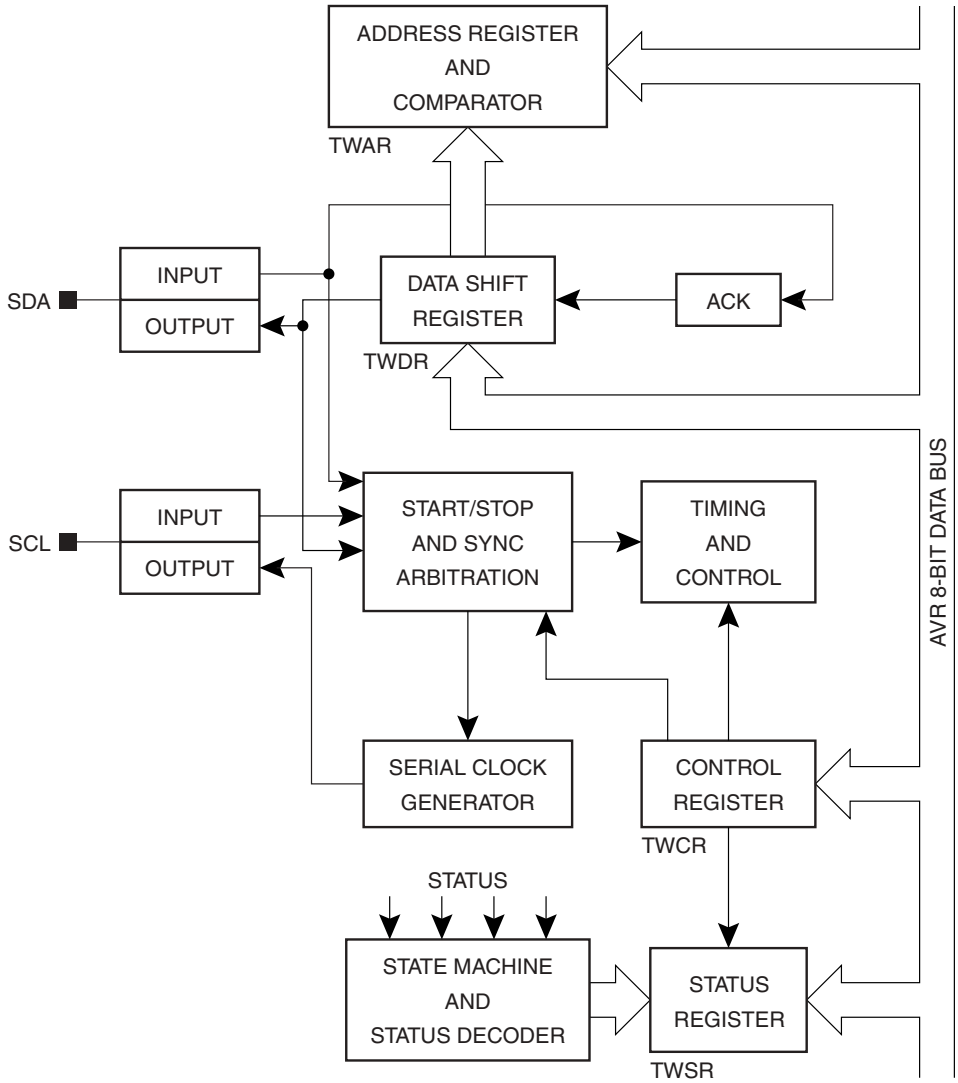

The CPU interfaces with the 2-wire Serial Interface via the following five I/O registers: the 2-wire Serial Bit-rate Register (TWBR), the 2-wire Serial Control Register (TWCR), the 2-wire Serial Status Register (TWSR), the 2-wire Serial Data Register (TWDR), and the 2-wire Serial Address Register (TWAR, used in Slave mode).

The 2-wire Serial Bit-rate Register – TWBR

Bit	7	6	5	4	3	2	1	0	
$1C ($3C)	**TWBR7**	**TWBR6**	**TWBR5**	**TWBR4**	**TWBR3**	**TWBR2**	**TWBR1**	**TWBR0**	**TWBR**
Read/Write	R/W	R/W	R/W	R/W	R/W	R/W	R/W	R/W	
Initial Value	0	0	0	0	0	0	0	0	

- **Bits 7..0 - 2-wire Serial Bit-rate Register**

TWBR selects the division factor for the bit-rate generator. The bit-rate generator is a frequency divider which generates the SCL clock frequency in the Master modes according to the following equation:

$$\text{Bit-rate} = \frac{f_{CK}}{16 + 2(\text{TWBR})}$$

- Bit-rate = SCL frequency
- f_{CK} = CPU Clock frequency
- TWBR = Contents of the 2-wire Serial Bit Rate Register

Both the receiver and the transmitter can stretch the Low period of the SCL line when waiting for user response, thereby reducing the average bit rate.

The 2-wire Serial Control Register – TWCR

Bit	7	6	5	4	3	2	1	0	
$36 ($56)	**TWINT**	**TWEA**	**TWSTA**	**TWSTO**	**TWWC**	**TWEN**	**-**	**TWIE**	**TWCR**
Read/Write	R/W	R/W	R/W	R/W	R	R/W	R	R/W	
Initial Value	0	0	0	0	0	0	0	0	

- **Bit 7 - TWINT: 2-wire Serial Interrupt Flag**

This bit is set by the hardware when the 2-wire Serial Interface has finished its current job and expects application software response. If the I-bit in the SREG and TWIE in the TWCR register are set (one), the MCU will jump to the interrupt vector at address $0046. While the TWINT flag is set, the bus SCL clock line Low period is stretched. The TWINT flag must be cleared by software by writing a logic 1 to it. Note that this flag is not automatically cleared by the hardware when executing the interrupt routine. Also note that clearing this flag starts the operation of the 2-wire Serial Interface, so all accesses to the 2-wire Serial Address Register – TWAR, 2-wire Serial Status Register – TWSR, and 2-wire Serial Data Register – TWDR must be complete before clearing this flag.

- **Bit 6 - TWEA: 2-wire Serial Enable Acknowledge Flag**

TWEA flag controls the generation of the acknowledge pulse. If the TWEA bit is set, the ACK pulse is generated on the 2-wire Serial Bus if the following conditions are met:

- The device's own Slave address has been detected
- A general call has been received, while the TWGCE bit in the TWAR is set
- A data byte has been received in Master Receiver or Slave Receiver mode

By setting the TWEA bit Low the device can be virtually disconnected from the 2-wire Serial Bus temporarily. Address recognition can then be resumed by setting the TWEA bit again.

- **Bit 5 - TWSTA: 2-wire Serial Bus START Condition Flag**

The TWSTA flag is set by the CPU when it desires to become a Master on the 2-wire Serial Bus. The 2-wire serial hardware checks if the bus is available, and generates a Start condition on the bus if the bus is free. However, if the bus is not free, the 2-wire Serial Interface waits until a STOP condition is detected, and then generates a new Start condition to claim the bus Master status.

- **Bit 4 - TWSTO: 2-wire Serial Bus STOP Condition Flag**

TWSTO is a stop condition flag. In Master mode, setting the TWSTO bit in the control register will generate a STOP condition on the 2-wire Serial Bus. When the STOP condition is executed on the bus, the TWSTO bit is cleared automatically. In Slave mode, setting the TWSTO bit can be used to recover from an error condition. No stop condition is generated on the bus then, but the 2-wire Serial Interface returns to a well-defined unaddressed Slave mode.

- **Bit 3 - TWWC: 2-wire Serial Write Collision Flag**

Set when attempting to write to the 2-wire Serial Data Register – TWDR when TWINT is Low. This flag is updated at each attempt to write the TWDR register.

- **Bit 2 - TWEN: 2-wire Serial Interface Enable Flag**

The TWEN bit enables 2-wire serial operation. If this flag is cleared (zero), the bus outputs SDA and SCL are set to high impedance state and the input signals are ignored. The interface is activated by setting this flag (one).

- **Bit 1 - Res: Reserved Bit**

This bit is reserved in the AT94K and will always read as zero.

- **Bit 0 - TWIE: 2-wire Serial Interrupt Enable**

When this bit is enabled and the I-bit in SREG is set, the 2-wire Serial Interrupt will be activated for as long as the TWINT flag is High.

The TWCR is used to control the operation of the 2-wire Serial Interface. It is used to enable the 2-wire Serial Interface, to initiate a Master access, to generate a receiver acknowledge, to generate a stop condition, and control halting of the bus while the data to be written to the bus are written to the TWDR. It also indicates a write collision if data is attempted written to TWDR while the register is inaccessible.

The 2-wire Serial Status Register – TWSR

Bit	7	6	5	4	3	2	1	0	
$1D ($3D)	**TWS7**	**TWS6**	**TWS5**	**TWS4**	**TWS3**	**-**	**-**	**-**	**TWSR**
Read/Write	R	R	R	R	R	R	R	R	
Initial Value	1	1	1	1	1	0	0	0	

- **Bits 7..3 - TWS: 2-wire Serial Status**

These 5 bits reflect the status of the 2-wire Serial Logic and the 2-wire Serial Bus.

- **Bits 2..0 - Res: Reserved Bits**

These bits are reserved in the AT94K and will always read as zero

TWSR is read only. It contains a status code which reflects the status of the 2-wire Serial Logic and the 2-wire Serial Bus. There are 26 possible status codes. When TWSR contains $F8, no relevant state information is available and no 2-wire Serial Interrupt is requested. A valid status code is available in TWSR one CPU clock cycle after the 2-wire Serial Interrupt flag (TWINT) is set by the hardware and is valid until one CPU clock cycle after TWINT is cleared by software. Table 41 to Table 45 give the status information for the various modes.

The 2-wire Serial Data Register – TWDR

Bit	7	6	5	4	3	2	1	0	
$1F ($3F)	**MSB**							**LSB**	**TWDR**
Read/Write	R/W	R/W	R/W	R/W	R/W	R/W	R/W	R/W	
Initial Value	1	1	1	1	1	1	1	1	

- **Bits 7..0 - TWD: 2-wire Serial Data Register**

These eight bits constitute the next data byte to be transmitted, or the latest data byte received on the 2-wire Serial Bus.

In transmit mode, TWDR contains the next byte to be transmitted. In receive mode, the TWDR contains the last byte received. It is writable while the 2-wire Serial Interface is not in the process of shifting a byte. This occurs when the 2-wire Serial Interrupt flag (TWINT) is set by the hardware. Note that the data register cannot be initialized by the user before the first interrupt occurs. The data in TWDR remains stable as long as TWINT is set. While data is shifted out, data on the bus is simultaneously shifted in. TWDR always contains the last byte present on the bus, except after a wake up from Power-down Mode, or Power-save Mode by the 2-wire Serial Interrupt. For example, in the case of the lost bus arbitration, no data is lost in the transition from Master-to-Slave. Receiving the ACK flag is controlled by the 2-wire Serial Logic automatically, the CPU cannot access the ACK bit directly.

The 2-wire Serial (Slave) Address Register – TWAR

Bit	7	6	5	4	3	2	1	0	
$1E ($3E)	**MSB**						**LSB**	**TWGCE**	**TWAR**
Read/Write	R/W	R/W	R/W	R/W	R/W	R/W	R/W	R/W	
Initial Value	1	1	1	1	1	1	1	0	

- **Bits 7..1 - TWA: 2-wire Serial Slave Address Register**

These seven bits constitute the Slave address of the 2-wire Serial Bus interface unit.

- **Bit 0 - TWGCE: 2-wire Serial General Call Recognition Enable Bit**

This bit enables, if set, the recognition of the General Call given over the 2-wire Serial Bus.

The TWAR should be loaded with the 7-bit Slave address (in the seven most significant bits of TWAR) to which the 2-wire Serial Interface will respond when programmed as a Slave transmitter or receiver, and not needed in the Master modes. The LSB of TWAR is used to enable recognition of the general call address ($00). There is an associated address comparator that looks for the Slave address (or general call address if enabled) in the received serial address. If a match is found, an interrupt request is generated.

2-wire Serial Modes

The 2-wire Serial Interface can operate in four different modes:

- Master Transmitter
- Master Receiver
- Slave Receiver
- Slave Transmitter

Data transfer in each mode of operation is shown in Figure 71 to Figure 74. These figures contain the following abbreviations:

S: START condition

R: Read bit (High level at SDA)

W: Write bit (Low level at SDA)

A: Acknowledge bit (Low level at SDA)

$\overline{A}$: Not acknowledge bit (High level at SDA)

Data: 8-bit data byte

P: STOP condition

In Figure 71 to Figure 74, circles are used to indicate that the 2-wire Serial Interrupt flag is set. The numbers in the circles show the status code held in TWSR. At these points, an interrupt routine must be executed to continue or complete the 2-wire Serial Transfer. The 2-wire Serial Transfer is suspended until the 2-wire Serial Interrupt flag is cleared by software.

The 2-wire Serial Interrupt flag is not automatically cleared by the hardware when executing the interrupt routine. Also note that the 2-wire Serial Interface starts execution as soon as this bit is cleared, so that all access to TWAR, TWDR and TWSR must have been completed before clearing this flag.

When the 2-wire Serial Interrupt flag is set, the status code in TWSR is used to determine the appropriate software action. For each status code, the required software action and details of the following serial transfer are given in Table 41 to Table 45.

Master Transmitter Mode

In the Master Transmitter mode, a number of data bytes are transmitter to a Slave Receiver, see Figure 71. Before the Master Transmitter mode can be entered, the TWCR must be initialized as shown in Table 38.

Table 38. TWCR: Master Transmitter Mode Initialization

TWCR	TWINT	TWEA	TWSTA	TWSTO	TWWC	TWEN	-	TWIE
value	0	X	0	0	0	1	0	X

TWEN must be set to enable the 2-wire Serial Interface, TWSTA and TWSTO must be cleared.

The Master Transmitter mode may now be entered by setting the TWSTA bit. The 2-wire Serial Logic will now test the 2-wire Serial Bus and generate a START condition as soon as the bus becomes free. When a START condition is transmitted, the 2-wire Serial Interrupt flag (TWINT) is set by the hardware, and the status code in TWSR will be $08. TWDR must then be loaded with the Slave address and the data direction bit (SLA+W). The TWINT flag must then be cleared by software before the 2-wire Serial Transfer can continue. The TWINT flag is cleared by writing a logic 1 to the flag.

When the Slave address and the direction bit have been transmitted and an acknowledgment bit has been received, TWINT is set again and a number of status codes in TWSR are possible. Status codes $18, $20, or $38 apply to Master mode, and status codes $68, $78, or $B0 apply to Slave mode. The appropriate action to be taken for each of these status codes is

detailed in Table 41. The data must be loaded when TWINT is High only. If not, the access will be discarded, and the Write Collision bit, TWWC, will be set in the TWCR register. This scheme is repeated until a STOP condition is transmitted by writing a logic 1 to the TWSTO bit in the TWCR register.

After a repeated START condition (state $10) the 2-wire Serial Interface may switch to the Master Receiver mode by loading TWDR with SLA+R.

Master Receiver Mode

In the Master Receiver mode, a number of data bytes are received from a Slave Transmitter, see Figure 72. The transfer is initialized as in the Master Transmitter mode. When the START condition has been transmitted, the TWINT flag is set by the hardware. The software must then load TWDR with the 7-bit Slave address and the data direction bit (SLA+R). The 2-wire Serial Interrupt flag must then be cleared by software before the 2-wire Serial Transfer can continue.

When the Slave address and the direction bit have been transmitted and an acknowledgment bit has been received, TWINT is set again and a number of status codes in TWSR are possible. Status codes $40, $48, or $38 apply to Master mode, and status codes $68, $78, or $B0 apply to Slave mode. The appropriate action to be taken for each of these status codes is detailed in Table 42. Received data can be read from the TWDR register when the TWINT flag is set High by the hardware. This scheme is repeated until a STOP condition is transmitted by writing a logic 1 to the TWSTO bit in the TWCR register.

After a repeated START condition (state $10), the 2-wire Serial Interface may switch to the Master Transmitter mode by loading TWDR with SLA+W.

Slave Receiver Mode

In the Slave Receiver mode, a number of data bytes are received from a Master Transmitter, see Figure 73. To initiate the Slave Receiver mode, TWAR and TWCR must be initialized as follows:

Table 39. TWAR: Slave Receiver Mode Initialization

TWAR	TWA6	TWA5	TWA4	TWA3	TWA2	TWA1	TWA0	TWGCE
value	Device's own Slave address							

The upper 7 bits are the address to which the 2-wire Serial Interface will respond when addressed by a Master. If the LSB is set, the 2-wire Serial Interface will respond to the general call address ($00), otherwise it will ignore the general call address.

Table 40. TWCR: Slave Receiver Mode Initialization

TWCR	TWINT	TWEA	TWSTA	TWSTO	TWWC	TWEN	-	TWIE
value	0	1	0	0	0	1	0	X

TWEN must be set to enable the 2-wire Serial Interface. The TWEA bit must be set to enable the acknowledgment of the device's own Slave address or the general call address. TWSTA and TWSTO must be cleared.

When TWAR and TWCR have been initialized, the 2-wire Serial Interface waits until it is addressed by its own Slave address (or the general call address if enabled) followed by the data direction bit which must be "0" (write) for the 2-wire Serial Interface to operate in the Slave Receiver mode. After its own Slave address and the write bit have been received, the 2-wire Serial Interrupt flag is set and a valid status code can be read from TWSR. The status code is used to determine the appropriate software action. The appropriate action to be taken for each status code is detailed in Table 43. The Slave Receiver mode may also be entered if arbitration is lost while the 2-wire Serial Interface is in the Master mode (see states $68 and $78).

If the TWEA bit is reset during a transfer, the 2-wire Serial Interface will return a “Not Acknowledged” (1) to SDA after the next received data byte. While TWEA is reset, the 2-wire Serial Interface does not respond to its own Slave address. However, the 2-wire Serial Bus is still monitored and address recognition may resume at any time by setting TWEA. This implies that the TWEA bit may be used to temporarily isolate the 2-wire Serial Interface from the 2-wire serial bus.

In ADC Noise Reduction Mode, Power-down Mode and Power-save Mode, the clock system to the 2-wire Serial Interface is turned off. If the Slave Receiver mode is enabled, the interface can still acknowledge a general call and its own Slave address by using the 2-wire serial bus clock as a clock source. The part will then wake up from sleep and the 2-wire Serial Interface will hold the SCL clock Low during the wake up and until the TWCINT flag is cleared.

Note that the 2-wire Serial Data Register – TWDR does not reflect the last byte present on the bus when waking up from these Sleep Modes.

Slave Transmitter Mode

In the Slave Transmitter mode, a number of data bytes are transmitted to a Master Receiver (see Figure 74). The transfer is initialized as in the Slave Receiver mode. When TWAR and TWCR have been initialized, the 2-wire Serial Interface waits until it is addressed by its own Slave address (or the general call address if enabled) followed by the data direction bit which must be “1” (read) for the 2-wire Serial Interface to operate in the Slave Transmitter mode. After its own Slave address and the read bit have been received, the 2-wire Serial Interrupt flag is set and a valid status code can be read from TWSR. The status code is used to determine the appropriate software action. The appropriate action to be taken for each status code is detailed in Table 44. The Slave Transmitter mode may also be entered if arbitration is lost while the 2-wire Serial Interface is in the Master mode (see state $B0).

If the TWEA bit is reset during a transfer, the 2-wire Serial Interface will transmit the last byte of the transfer and enter state $C0 or state $C8. the 2-wire Serial Interface is switched to the not addressed Slave mode, and will ignore the Master if it continues the transfer. Thus the Master Receiver receives all “1” as serial data. While TWEA is reset, the 2-wire Serial Interface does not respond to its own Slave address. However, the 2-wire serial bus is still monitored and address recognition may resume at any time by setting TWEA. This implies that the TWEA bit may be used to temporarily isolate the 2-wire Serial Interface from the 2-wire serial bus.

Miscellaneous States

There are two status codes that do not correspond to a defined 2-wire Serial Interface state: Status $F8 and Status $00, see Table 45.

Status $F8 indicates that no relevant information is available because the 2-wire Serial Interrupt flag (TWINT) is not set yet. This occurs between other states, and when the 2-wire Serial Interface is not involved in a serial transfer.

Status $00 indicates that a bus error has occurred during a 2-wire serial transfer. A bus error occurs when a START or STOP condition occurs at an illegal position in the format frame. Examples of such illegal positions are during the serial transfer of an address byte, a data byte or an acknowledge bit. When a bus error occurs, TWINT is set. To recover from a bus error, the TWSTO flag must set and TWINT must be cleared by writing a logic 1 to it. This causes the 2-wire Serial Interface to enter the not addressed Slave mode and to clear the TWSTO flag (no other bits in TWCR are affected). The SDA and SCL lines are released and no STOP condition is transmitted.

Table 41. Status Codes for Master Transmitter Mode

Status Code (TWSR)	Status of the 2-wire Serial Bus and 2-wire Serial Hardware	Application Software Response					Next Action Taken by 2-wire Serial Hardware
		To/From TWDR	To TWCR				
			STA	STO	TWINT	TWEA	
$08	A START condition has been transmitted	Load SLA+W	X	0	1	X	SLA+W will be transmitted; ACK or NOT ACK will be received
$10	A repeated START condition has been transmitted	Load SLA+W or	X	0	1	X	SLA+W will be transmitted; ACK or NOT ACK will be received
		Load SLA+R	X	0	1	X	SLA+R will be transmitted; Logic will switch to Master Receiver mode
$18	SLA+W has been transmitted; ACK has been received	Load data byte or	0	0	1	X	Data byte will be transmitted and ACK or NOT ACK will be received
		No TWDR action or	1	0	1	X	Repeated START will be transmitted
		No TWDR action or	0	1	1	X	STOP condition will be transmitted and TWSTO flag will be reset
		No TWDR action	1	1	1	X	STOP condition followed by a START condition will be transmitted and TWSTO flag will be reset
$20	SLA+W has been transmitted; NOT ACK has been received	Load data byte or	0	0	1	X	Data byte will be transmitted and ACK or NOT ACK will be received
		No TWDR action or	1	0	1	X	Repeated START will be transmitted
		No TWDR action or	0	1	1	X	STOP condition will be transmitted and TWSTO flag will be reset
		No TWDR action	1	1	1	X	STOP condition followed by a START condition will be transmitted and TWSTO flag will be reset
$28	Data byte has been transmitted; ACK has been received	Load data byte or	0	0	1	X	Data byte will be transmitted and ACK or NOT ACK will be received
		No TWDR action or	1	0	1	X	Repeated START will be transmitted
		No TWDR action or	0	1	1	X	STOP condition will be transmitted and TWSTO flag will be reset
		No TWDR action	1	1	1	X	STOP condition followed by a START condition will be transmitted and TWSTO flag will be reset
$30	Data byte has been transmitted; NOT ACK has been received	Load data byte or	0	0	1	X	Data byte will be transmitted and ACK or NOT ACK will be received
		No TWDR action or	1	0	1	X	Repeated START will be transmitted
		No TWDR action or	0	1	1	X	STOP condition will be transmitted and TWSTO flag will be reset
		No TWDR action	1	1	1	X	STOP condition followed by a START condition will be transmitted and TWSTO flag will be reset
$38	Arbitration lost in SLA+W or data bytes	No TWDR action or	0	0	1	X	2-wire serial bus will be released and not addressed Slave mode entered
		No TWDR action	1	0	1	X	A START condition will be transmitted when the bus becomes free

Figure 71. Formats and States in the Master Transmitter Mode

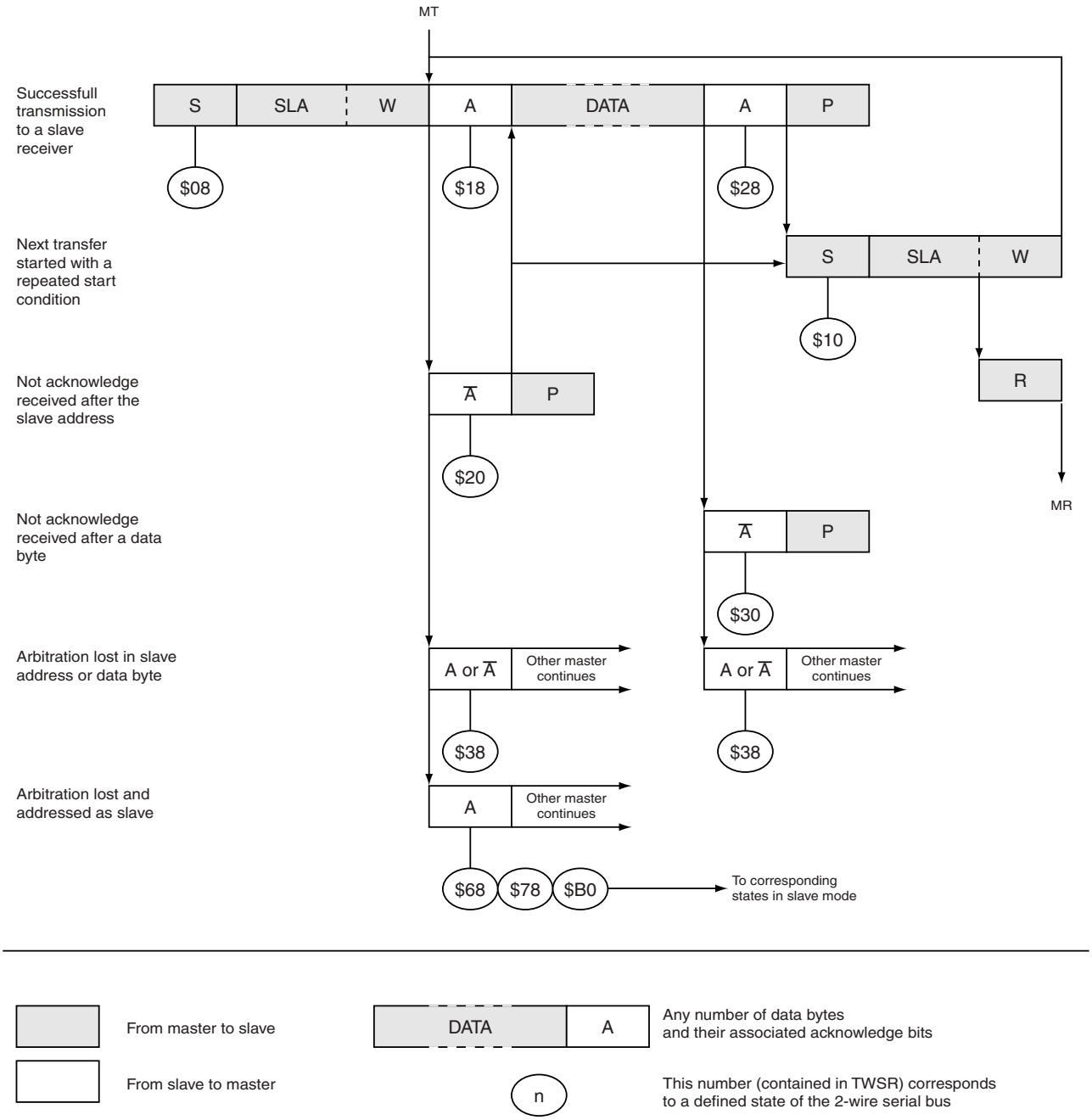

Table 42. Status Codes for Master Receiver Mode

Status Code (TWSR)	Status of the 2-wire Serial Bus and 2-wire Serial Hardware	Application Software Response					Next Action Taken by 2-wire Serial Hardware
		To/From TWDR	To TWCR				
			STA	STO	TWINT	TWEA	
$08	A START condition has been transmitted	Load SLA+R	X	0	1	X	SLA+R will be transmitted ACK or NOT ACK will be received
$10	A repeated START condition has been transmitted	Load SLA+R or	X	0	1	X	SLA+R will be transmitted ACK or NOT ACK will be received
		Load SLA+W	X	0	1	X	SLA+W will be transmitted Logic will switch to Master Transmitter mode
$38	Arbitration lost in SLA+R or NOT ACK bit	No TWDR action or	0	0	1	X	2-wire serial bus will be released and not addressed Slave mode will be entered
		No TWDR action	1	0	1	X	A START condition will be transmitted when the bus becomes free
$40	SLA+R has been transmitted; ACK has been received	No TWDR action or	0	0	1	0	Data byte will be received and NOT ACK will be returned
		No TWDR action	0	0	1	1	Data byte will be received and ACK will be returned
$48	SLA+R has been transmitted; NOT ACK has been received	No TWDR action or	1	0	1	X	Repeated START will be transmitted
		No TWDR action or	0	1	1	X	STOP condition will be transmitted and TWSTO flag will be reset
		No TWDR action	1	1	1	X	STOP condition followed by a START condition will be transmitted and TWSTO flag will be reset
$50	Data byte has been received; ACK has been returned	Read data byte or	0	0	1	0	Data byte will be received and NOT ACK will be returned
		Read data byte	0	0	1	1	Data byte will be received and ACK will be returned
$58	Data byte has been received; NOT ACK has been returned	Read data byte or	1	0	1	X	Repeated START will be transmitted
		Read data byte or	0	1	1	X	STOP condition will be transmitted and TWSTO flag will be reset
		Read data byte	1	1	1	X	STOP condition followed by a START condition will be transmitted and TWSTO flag will be reset

Figure 72. Formats and States in the Master Receiver Mode

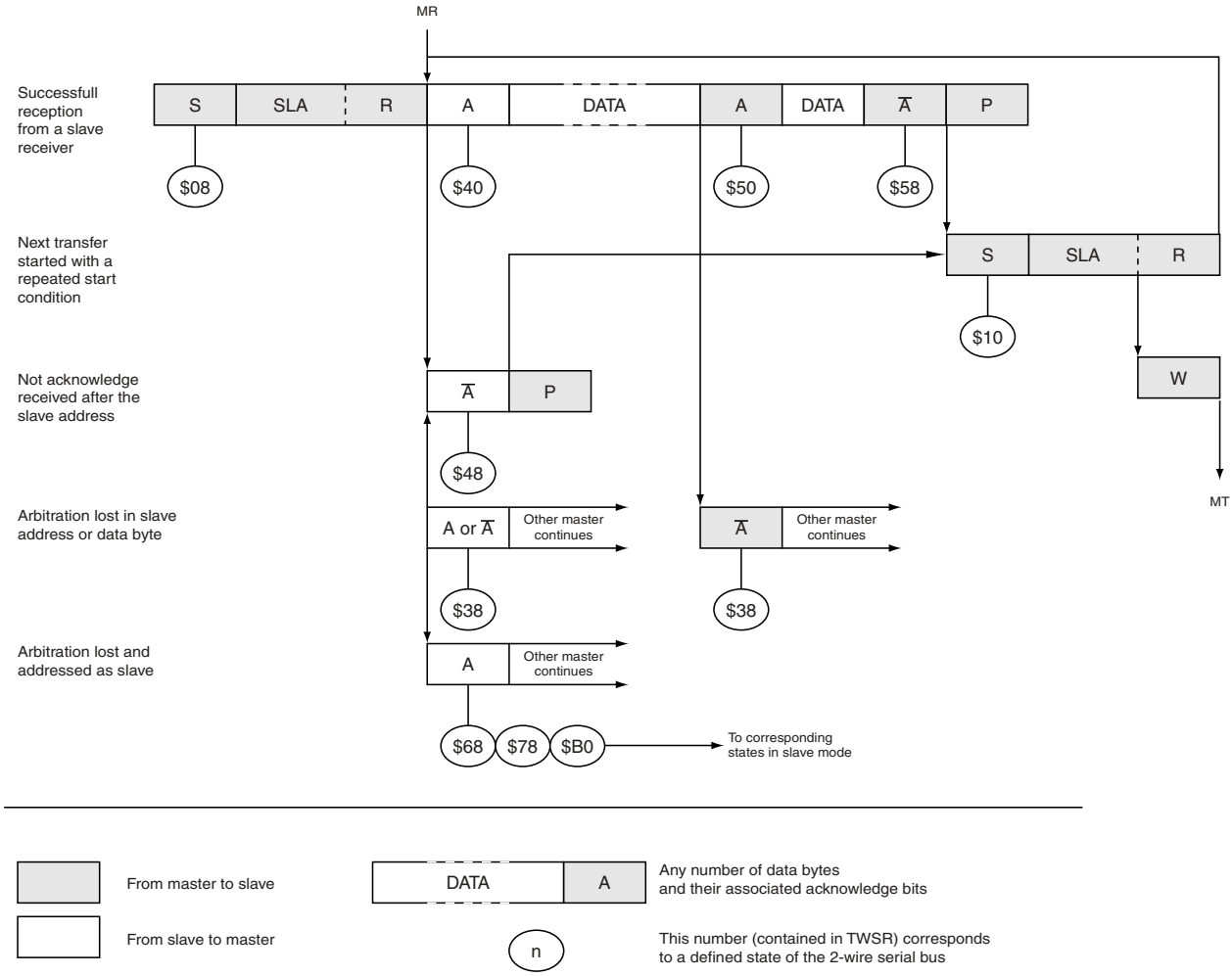

Table 43. Status Codes for Slave Receiver Mode

Status Code (TWSR)	Status of the 2-wire Serial Bus and 2-wire Serial Hardware	Application Software Response					Next Action Taken by 2-wire Serial Hardware
		To/From TWDR	To TWCR				
			STA	STO	TWINT	TWEA	
$60	Own SLA+W has been received; ACK has been returned	No TWDR action or	X	0	1	0	Data byte will be received and NOT ACK will be returned
		No TWDR action	X	0	1	1	Data byte will be received and ACK will be returned
$68	Arbitration lost in SLA+R/W as Master; own SLA+W has been received; ACK has been returned	No TWDR action or	X	0	1	0	Data byte will be received and NOT ACK will be returned
		No TWDR action	X	0	1	1	Data byte will be received and ACK will be returned
$70	General call address has been received; ACK has been returned	No TWDR action or	X	0	1	0	Data byte will be received and NOT ACK will be returned
		No TWDR action	X	0	1	1	Data byte will be received and ACK will be returned
$78	Arbitration lost in SLA+R/W as Master; General call address has been received; ACK has been returned	No TWDR action or	X	0	1	0	Data byte will be received and NOT ACK will be returned
		No TWDR action	X	0	1	1	Data byte will be received and ACK will be returned
$80	Previously addressed with own SLA+W; data has been received; ACK has been returned	No TWDR action or	X	0	1	0	Data byte will be received and NOT ACK will be returned
		No TWDR action	X	0	1	1	Data byte will be received and ACK will be returned
$88	Previously addressed with own SLA+W; data has been received; NOT ACK has been returned	Read data byte or	0	0	1	0	Switched to the not addressed Slave mode; no recognition of own SLA or GCA
		Read data byte or	0	0	1	1	Switched to the not addressed Slave mode; own SLA will be recognized; GCA will be recognized if GC = “1”
		Read data byte or	1	0	1	0	Switched to the not addressed Slave mode; no recognition of own SLA or GCA; a START condition will be transmitted when the bus becomes free
		Read data byte	1	0	1	1	Switched to the not addressed Slave mode; own SLA will be recognized; GCA will be recognized if GC = “1”; a START condition will be transmitted when the bus becomes free

Table 43. Status Codes for Slave Receiver Mode (Continued)

Status Code (TWSR)	Status of the 2-wire Serial Bus and 2-wire Serial Hardware	Application Software Response					Next Action Taken by 2-wire Serial Hardware
		To/From TWDR	To TWCR				
			STA	STO	TWINT	TWEA	
$90	Previously addressed with general call; data has been received; ACK has been returned	Read data byte or	X	0	1	0	Data byte will be received and NOT ACK will be returned
		Read data byte	X	0	1	1	Data byte will be received and ACK will be returned
$98	Previously addressed with general call; data has been received; NOT ACK has been returned	Read data byte or	0	0	1	0	Switched to the not addressed Slave mode; no recognition of own SLA or GCA
		Read data byte or	0	0	1	1	Switched to the not addressed Slave mode; own SLA will be recognized; GCA will be recognized if GC = “1”
		Read data byte or	1	0	1	0	Switched to the not addressed Slave mode; no recognition of own SLA or GCA; a START condition will be transmitted when the bus becomes free
		Read data byte	1	0	1	1	Switched to the not addressed Slave mode; own SLA will be recognized; GCA will be recognized if GC = “1”; a START condition will be transmitted when the bus becomes free
$A0	A STOP condition or repeated START condition has been received while still addressed as Slave	Read data byte or	0	0	1	0	Switched to the not addressed Slave mode; no recognition of own SLA or GCA
		Read data byte or	0	0	1	1	Switched to the not addressed Slave mode; own SLA will be recognized; GCA will be recognized if GC = “1”
		Read data byte or	1	0	1	0	Switched to the not addressed Slave mode; no recognition of own SLA or GCA; a START condition will be transmitted when the bus becomes free
		Read data byte	1	0	1	1	Switched to the not addressed Slave mode; own SLA will be recognized; GCA will be recognized if GC = “1”; a START condition will be transmitted when the bus becomes free

Figure 73. Formats and States in the Slave Receiver Mode

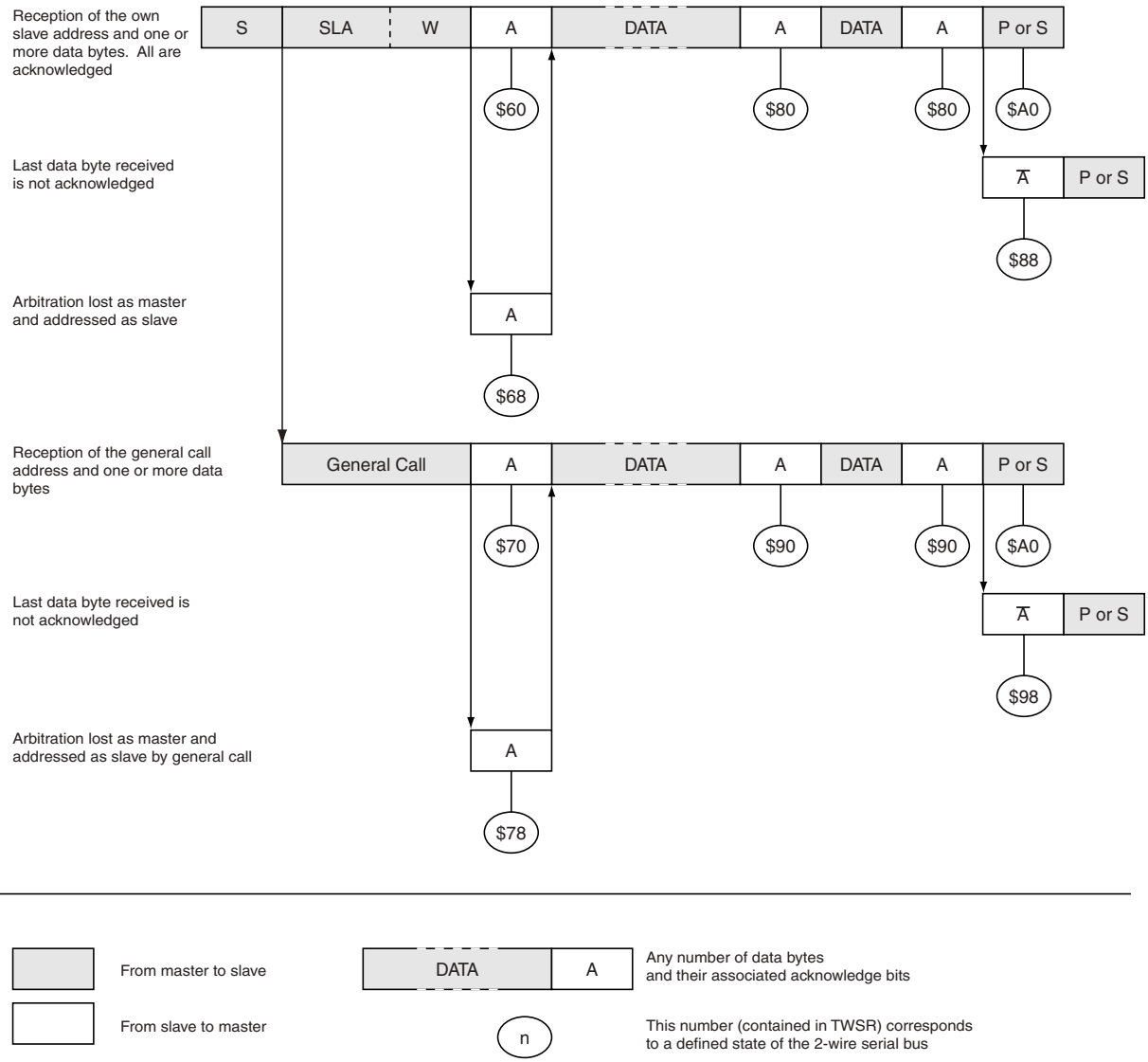

Table 44. Status Codes for Slave Transmitter Mode

Status Code (TWSR)	Status of the 2-wire Serial Bus and 2-wire Serial Hardware	Application Software Response					Next Action Taken by 2-wire Serial Hardware
		To/From TWDR	To TWCR				
			STA	STO	TWINT	TWEA	
$A8	Own SLA+R has been received; ACK has been returned	Load data byte or	X	0	1	0	Last data byte will be transmitted and NOT ACK should be received
		Load data byte	X	0	1	1	Data byte will be transmitted and ACK should be received
$B0	Arbitration lost in SLA+R/W as Master; own SLA+R has been received; ACK has been returned	Load data byte or	X	0	1	0	Last data byte will be transmitted and NOT ACK should be received
		Load data byte	X	0	1	1	Data byte will be transmitted and ACK should be received
$B8	Data byte in TWDR has been transmitted; ACK has been received	Load data byte or	X	0	1	0	Last data byte will be transmitted and NOT ACK should be received
		Load data byte	X	0	1	1	Data byte will be transmitted and ACK should be received
$C0	Data byte in TWDR has been transmitted; NOT ACK has been received	No TWDR action or	0	0	1	0	Switched to the not addressed Slave mode; no recognition of own SLA or GCA
		No TWDR action or	0	0	1	1	Switched to the not addressed Slave mode; own SLA will be recognized; GCA will be recognized if GC = “1”
		No TWDR action or	1	0	1	0	Switched to the not addressed Slave mode; no recognition of own SLA or GCA; a START condition will be transmitted when the bus becomes free
		No TWDR action	1	0	1	1	Switched to the not addressed Slave mode; own SLA will be recognized; GCA will be recognized if GC = “1”; a START condition will be transmitted when the bus becomes free
$C8	Last data byte in TWDR has been transmitted (TWAE = “0”); ACK has been received	No TWDR action or	0	0	1	0	Switched to the not addressed Slave mode; no recognition of own SLA or GCA
		No TWDR action or	0	0	1	1	Switched to the not addressed Slave mode; own SLA will be recognized; GCA will be recognized if GC = “1”
		No TWDR action or	1	0	1	0	Switched to the not addressed Slave mode; no recognition of own SLA or GCA; a START condition will be transmitted when the bus becomes free
		No TWDR action	1	0	1	1	Switched to the not addressed Slave mode; own SLA will be recognized; GCA will be recognized if GC = “1”; a START condition will be transmitted when the bus becomes free

Figure 74. Formats and States in the Slave Transmitter Mode

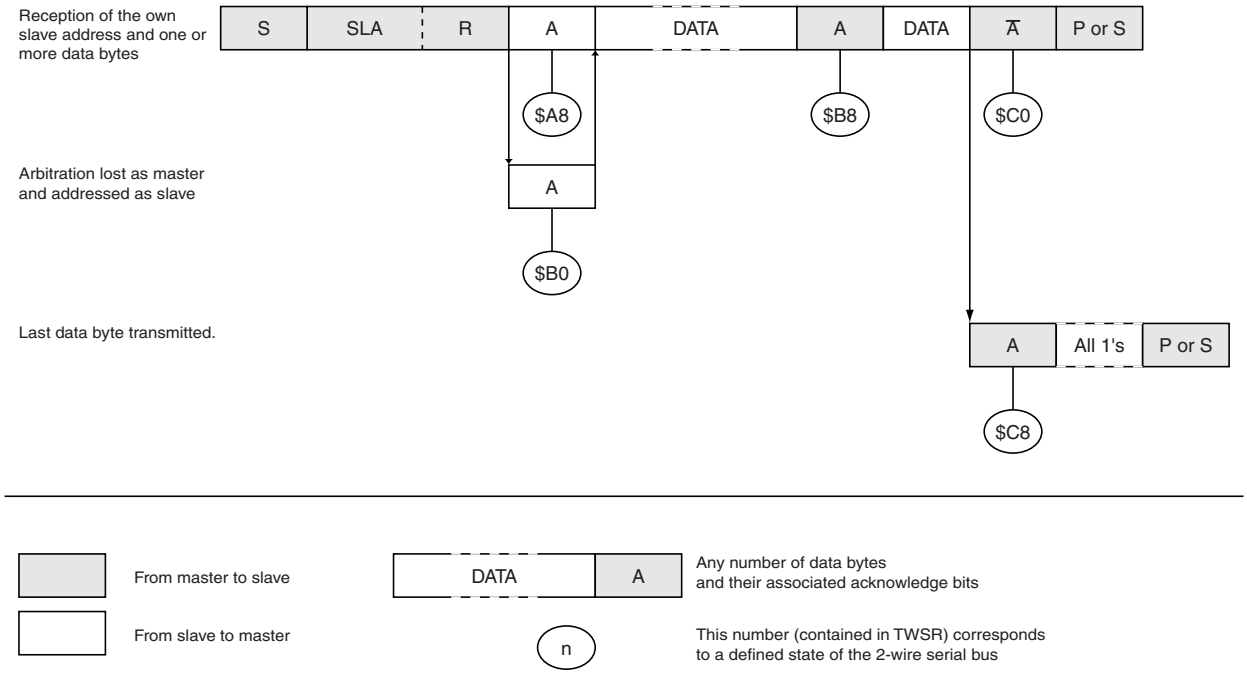

Table 45. Status Codes for Miscellaneous States

Status Code (TWSR)	Status of the 2-wire Serial Bus and 2-wire Serial Hardware	Application Software Response					Next Action Taken by 2-wire Serial Hardware
		To/From TWDR	To TWCR				
			STA	STO	TWINT	TWEA	
$F8	No relevant state information available; TWINT = “0”	No TWDR action	No TWCR action				Wait or proceed current transfer
$00	Bus error due to an illegal START or STOP condition	No TWDR action	0	1	1	X	Only the internal hardware is affected; no STOP condition is sent on the bus. In all cases, the bus is released and TWSTO is cleared.

I/O Ports

All AVR ports have true read-modify-write functionality when used as general I/O ports. This means that the direction of one port pin can be changed without unintentionally changing the direction of any other pin with the SBI and CBI instructions. The same applies for changing drive value (if configured as output) or enabling/disabling of pull-up resistors (if configured as input).

PortD

PortD is an 8-bit bi-directional I/O port with internal pull-up resistors.

Three I/O memory address locations are allocated for the PortD, one each for the Data Register – PORTD, $12($32), Data Direction Register – DDRD, $11($31) and the Port D Input Pins – PIND, $10($30). The Port D Input Pins address is read only, while the Data Register and the Data Direction Register are read/write.

The PortD output buffers can sink 20 mA. As inputs, PortD pins that are externally pulled Low will source current if the pull-up resistors are activated.

PortD Data Register – PORTD

Bit	7	6	5	4	3	2	1	0	
$12	**PORTD7**	**PORTD6**	**PORTD5**	**PORTD4**	**PORTD3**	**PORTD2**	**PORTD1**	**PORTD0**	**PORTD**
Read/Write	R/W	R/W	R/W	R/W	R/W	R/W	R/W	R/W	
Initial Value	1	1	1	1	1	1	1	1	

PortD Data Direction Register – DDRD

Bit	7	6	5	4	3	2	1	0	
$11	**DDD7**	**DDD6**	**DDD5**	**DDD4**	**DDD3**	**DDD2**	**DDD1**	**DDD0**	**DDRD**
Read/Write	R/W	R/W	R/W	R/W	R/W	R/W	R/W	R/W	
Initial Value	0	0	0	0	0	0	0	0	

PortD Input Pins Address – PIND

Bit	7	6	5	4	3	2	1	0	
$10	**PIND7**	**PIND6**	**PIND5**	**PIND4**	**PIND3**	**PIND2**	**PIND1**	**PIND0**	**PIND**
Read/Write	R	R	R	R	R	R	R	R	
Initial Value	Pull1	Pull1	Pull1	Pull1	Pull1	Pull1	Pull1	Pull1	

The PortD Input Pins address – PIND – is not a register, and this address enables access to the physical value on each PortD pin. When reading PORTD, the PortD Data Latch is read, and when reading PIND, the logical values present on the pins are read.

PortD as General Digital I/O

PDn, General I/O pin: The DDDn bit in the DDRD register selects the direction of this pin. If DDDn is set (one), PDn is configured as an output pin. If DDDn is cleared (zero), PDn is configured as an input pin. If PDn is set (one) when configured as an input pin the MOS pull-up resistor is activated. To switch the pull-up resistor off the PDn has to be cleared (zero) or the pin has to be configured as an output pin. The port pins are input with pull-up when a reset condition becomes active, even if the clock is not running, see Table 46.

Table 46. DDDn[1] Bits on PortD Pins

DDDn[1]	PORTDn[1]	I/O	Pull-up	Comment
0	0	Input	No	Tri-state (High-Z)
0	1	Input	Yes	PDn will source current if external pulled low (default)
1	0	Output	No	Push-pull zero output
1	1	Output	No	Push-pull one output

Note: 1. n: 7,6...0, pin number

Figure 75. PortD Schematic Diagram

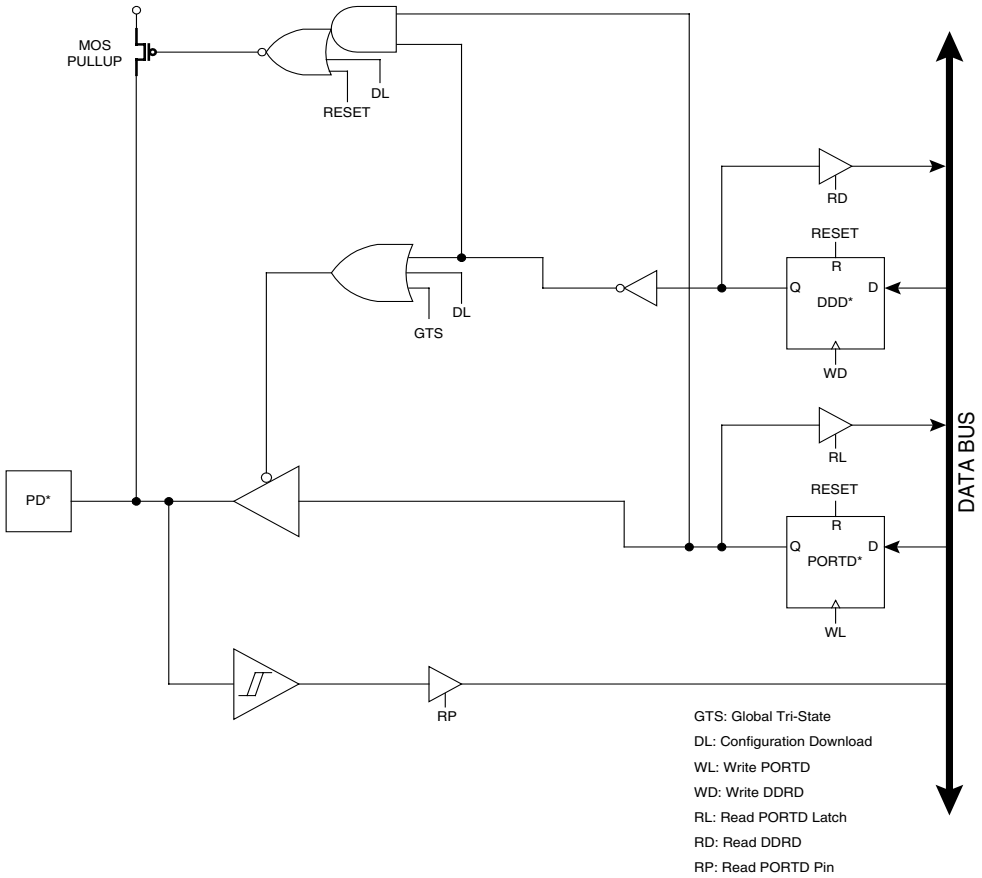

PortE

PortE is an 8-bit bi-directional I/O port with internal pull-up resistors.

Three I/O memory address locations are allocated for the PortE, one each for the Data Register – PORTE, $07($27), Data Direction Register – DDRE, $06($26) and the PortE Input Pins – PINE, $05($25). The PortE Input Pins address is read only, while the Data Register and the Data Direction Register are read/write.

The PortE output buffers can sink 20 mA. As inputs, PortE pins that are externally pulled Low will source current if the pull-up resistors are activated.

All PortE pins have alternate functions as shown in Table 47.

Table 47. PortE Pins Alternate Functions Controlled by SCR and AVR I/O Registers

Port Pin	Alternate Function	Input	Output
PE0	TX0 (UART0 transmit pin)	External Timer0 clock	-
PE1	RX0 (UART0 receive pin)	-	Output compare Timer0/PWM0
PE2	TX1 (UART1 transmit pin)	-	-
PE3	RX1 (UART1 receive pin)	-	Output compare Timer2/PWM2
PE4	INT0 (external Interrupt0 input)	External Timer1 clock	-
PE5	INT1 (external Interrupt0 input)	-	Output compare Timer1B/PWM1B
PE6	INT2 (external Interrupt0 input)	-	Output compare Timer1A/PWM1A
PE7	INT3 (external Interrupt0 input)	Input capture Counter1	

When the pins are used for the alternate function the DDRE and PORTE register has to be set according to the alternate function description.

PortE Data Register – PORTE

Bit	7	6	5	4	3	2	1	0	
$07 ($27)	**PORTE7**	**PORTE6**	**PORTE5**	**PORTE4**	**PORTE3**	**PORTE2**	**PORTE1**	**PORTE0**	**PORTE**
Read/Write	R/W	R/W	R/W	R/W	R/W	R/W	R/W	R/W	
Initial Value	1	1	1	1	1	1	1	1	

PortE Data Direction Register – DDRE

Bit	7	6	5	4	3	2	1	0	
$06 ($26)	**DDE7**	**DDE6**	**DDE5**	**DDE4**	**DDE3**	**DDE2**	**DDE1**	**DDE0**	**DDRE**
Read/Write	R/W	R/W	R/W	R/W	R/W	R/W	R/W	R/W	
Initial Value	0	0	0	0	0	0	0	0	

PortE Input Pins Address – PINE

Bit	7	6	5	4	3	2	1	0	
$05 ($25)	**PINE7**	**PINE6**	**PINE5**	**PINE4**	**PINE3**	**PINE2**	**PINE1**	**PINE0**	**PINE**
Read/Write	R	R	R	R	R	R	R	R	
Initial Value	Pull1	Pull1	Pull1	Pull1	Pull1	Pull1	Pull1	Pull1	

The PortE Input Pins address – PINE – is not a register, and this address enables access to the physical value on each PortE pin. When reading PORTE, the PortE Data Latch is read, and when reading PINE, the logical values present on the pins are read.

LowPortE as General Digital I/O

PEn, General I/O pin: The DDEn bit in the DDRE register selects the direction of this pin. If DDEn is set (one), PEn is configured as an output pin. If DDEn is cleared (zero), PEn is configured as an input pin. If PEn is set (one) when configured as an input pin, the MOS pull-up resistor is activated. To switch the pull-up resistor off the PEn has to be cleared (zero) or the pin has to be configured as an output pin. The port pins are input with pull-up when a reset condition becomes active, even if the clock is not running.

Table 48. DDEn(1) Bits on PortE Pins

DDEn(1)	PORTEn(1)	I/O	Pull-up	Comment
0	0	Input	No	Tri-state (High-Z)
0	1	Input	Yes	PDn(1) will source current if external pulled Low (default).
1	0	Output	No	Push-pull zero output
1	1	Output	No	Push-pull one output

Note: 1. n: 7,6...0, pin number

Alternate Functions of PortE

- **PortE, Bit 0**

UART0 Transmit Pin.

- **PortE, Bit 1**

UART0 Receive Pin. Receive Data (Data input pin for the UART0). When the UART0 receiver is enabled this pin is configured as an input regardless of the value of DDRE0. When the UART0 forces this pin to be an input, a logic 1 in PORTE0 will turn on the internal pull-up.

- **PortE, Bit 2**

UART1 Transmit Pin. The alternate functions of Port E as UART0 pins are enabled by setting bit SCR52 in the FPSLIC System Control Register. This is necessary only in smaller pinout packages where the UART signals are not bonded out. The alternate functions of Port E as UART1 pins are enabled by setting bit SCR53 in the FPSLIC System Control Register.

- **PortE, Bit 3**

UART1 Receive Pin. Receive Data (Data input pin for the UART1). When the UART1 receiver is enabled this pin is configured as an input regardless of the value of DDRE2. When the UART1 forces this pin to be an input, a logic 1 in PORTE2 will turn on the internal pull-up.

- **PortE, Bit 4-7**

External Interrupt sources 0/1/2/3: The PE4 – PE7 pins can serve as external interrupt sources to the MCU. Interrupts can be triggered by low-level on these pins. The internal pull-up MOS resistors can be activated as described above.

The alternate functions of PortE as Interrupt pins by setting a bit in the System Control Register. INT0 is controlled by SCR48. INT1 is controlled by SCR49. INT2 is controlled by SCR50. INT3 is controlled by SCR51.

PortE, Bit 7 also shares a pin with the configuration control signal CHECK. Lowering CON to initiate an FPSLIC download (whether for loading or Checking) causes the PE7/CHECK pin to immediately tri-state. This function happens only if the Check pin has been enabled in the system control register. The use of the Check pin will NOT disable the use of that pin as an input to PE7 nor as an input as alternate INT3.

Alternate I/O Functions of PortE

PortE may also be used for various Timer/Counter functions, such as External Input Clocks (TC0 and TC1), Input Capture (TC1), Pulse Width Modulation (TC0, TC1 and TC2), and toggling upon an Output Compare (TC0, TC1 and TC2). For a detailed pinout description, consult Table 47 on page 149. For more information on the function of each pin, See “Timer/Counters” on page 85.

PortE Schematics

Note that all port pins are synchronized. The synchronization latches are, however, not shown in the figures.

Figure 76. PortE Schematic Diagram (Pin PE0)

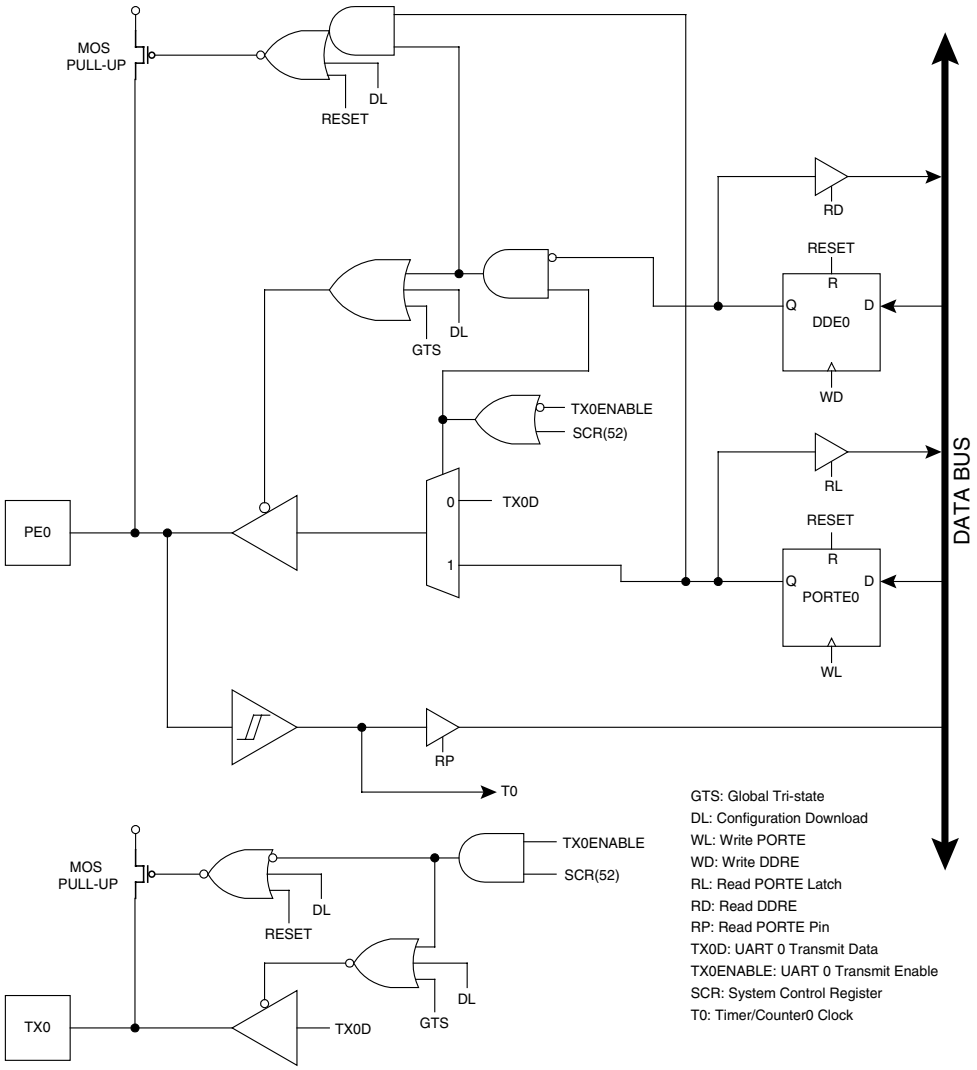

Figure 77. PortE Schematic Diagram (Pin PE1)

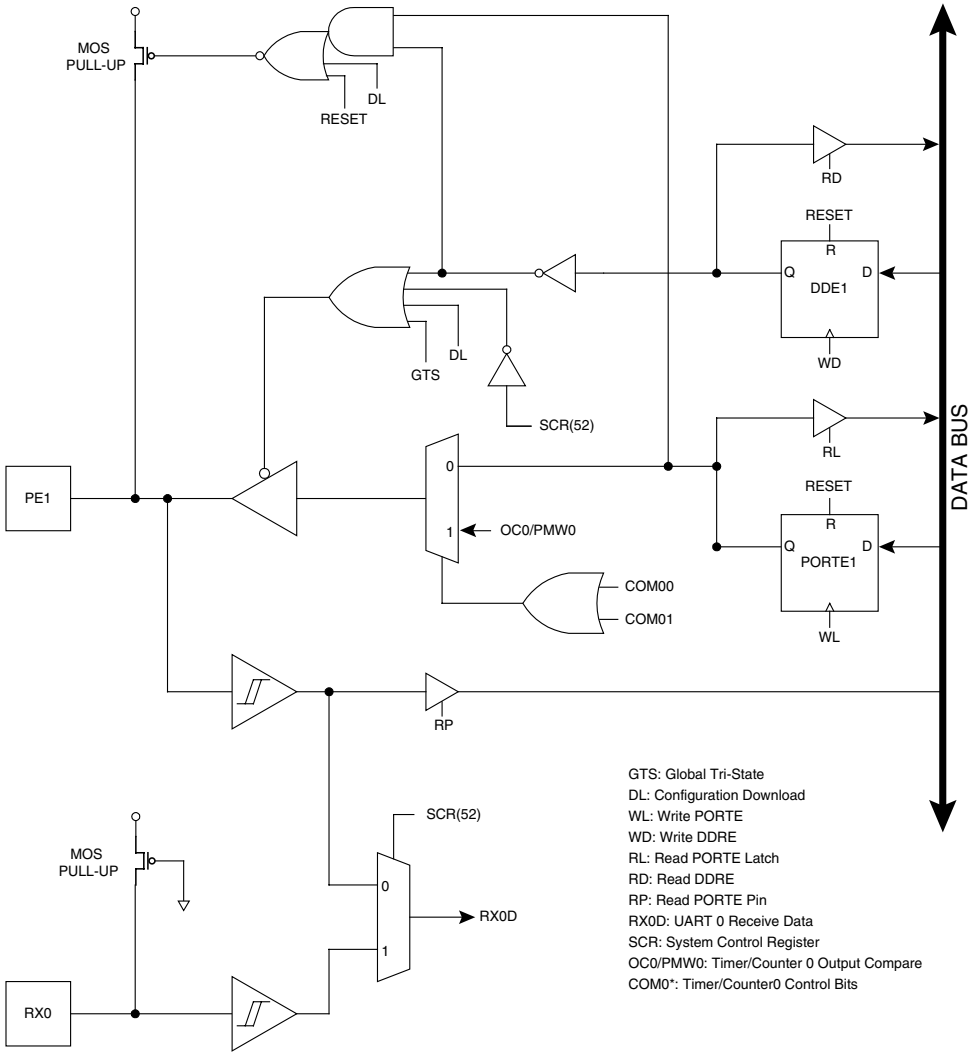

Figure 78. PortE Schematic Diagram (Pin PE2)

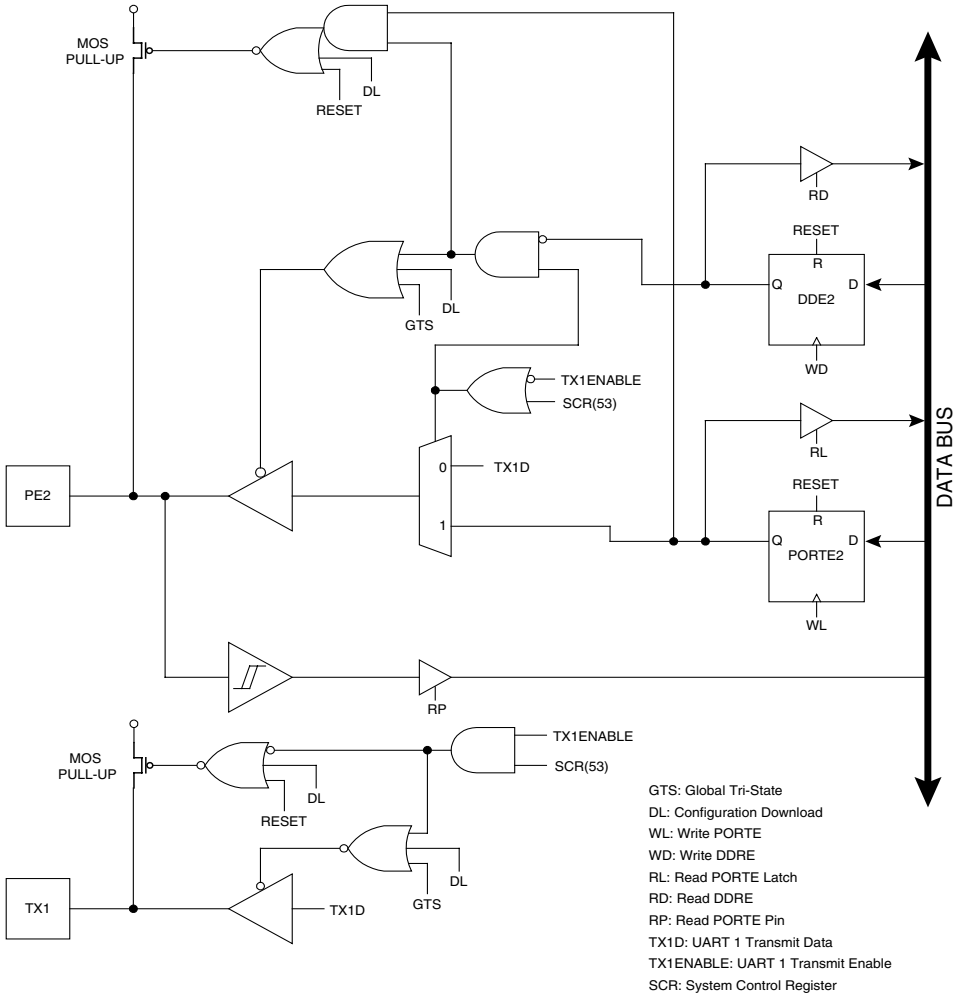

PortE Schematic Diagram (Pin PE3)

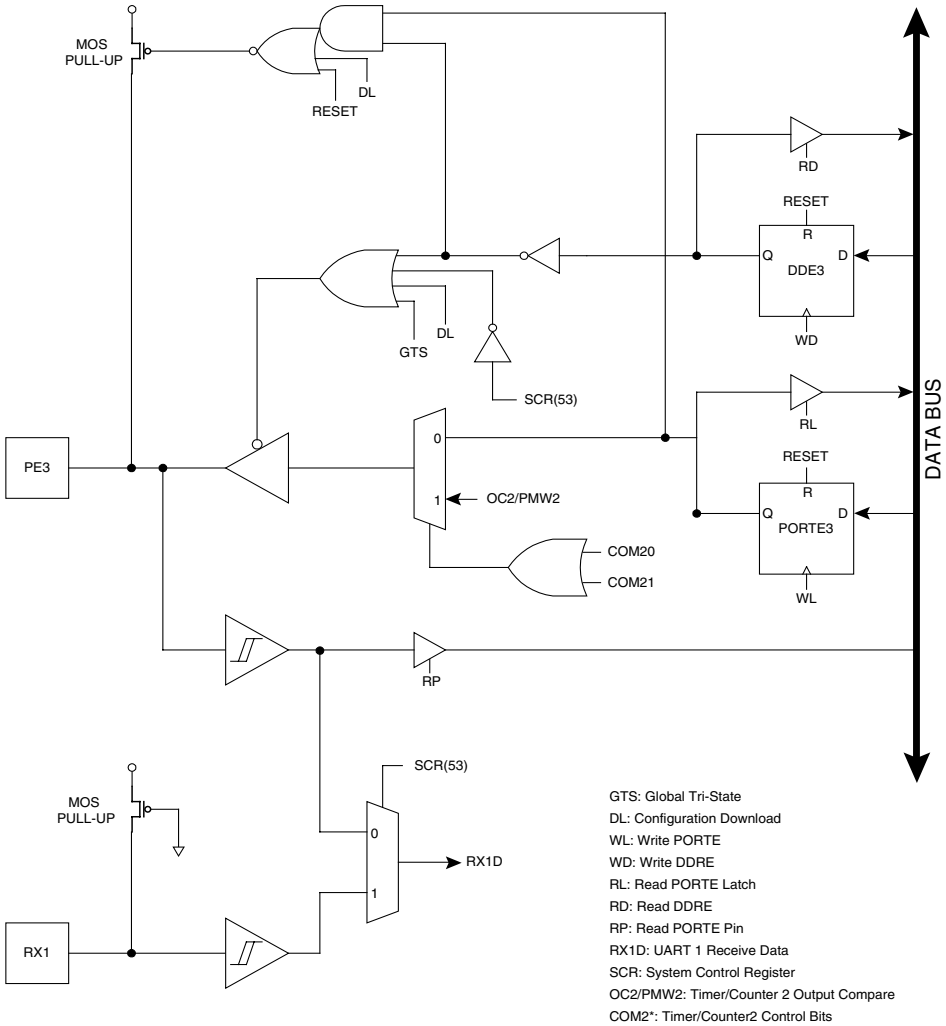

Figure 79. PortE Schematic Diagram (Pin PE4)

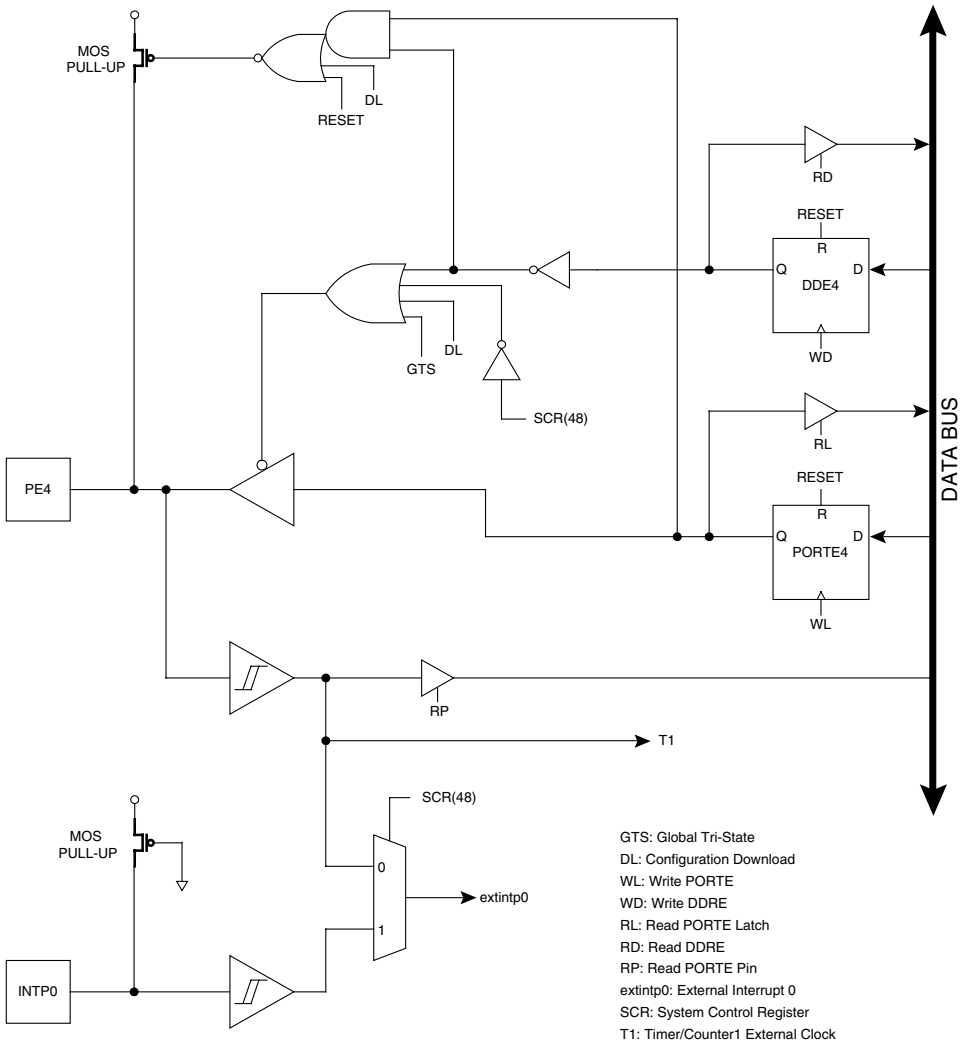

Figure 80. PortE Schematic Diagram (Pin PE5)

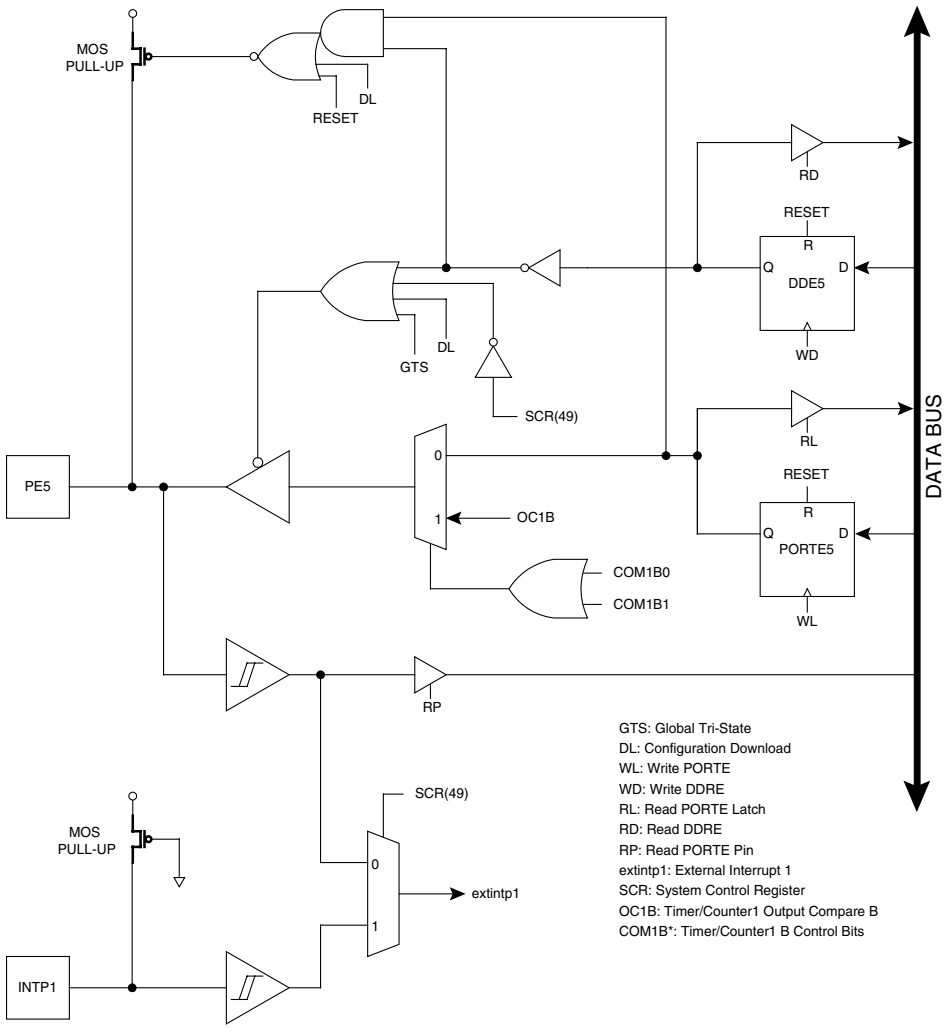

Figure 81. PortE Schematic Diagram (Pin PE6)

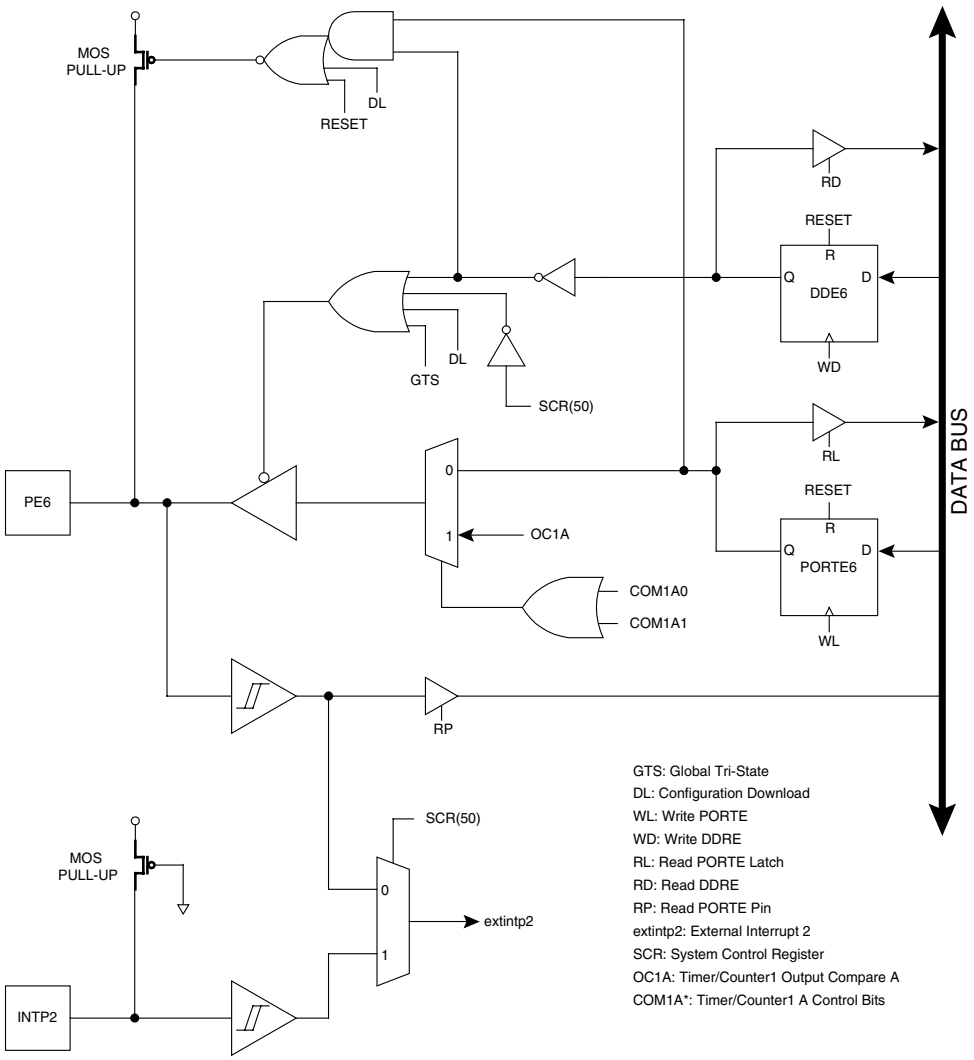

Figure 82. PortE Schematic Diagram (Pin PE7)

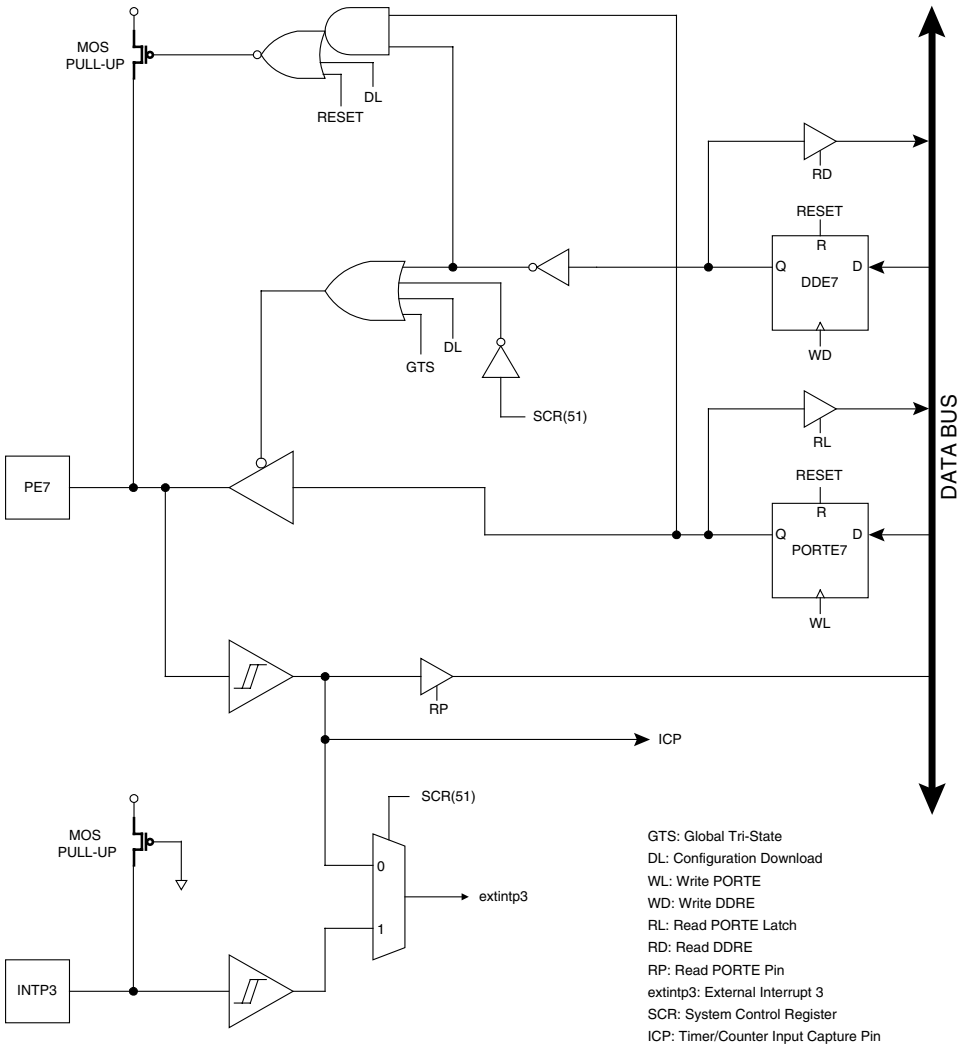

AC & DC Timing Characteristics

Absolute Maximum Ratings*(1)

Operating Temperature	-55°C to +125°C
Storage Temperature	-65°C to +150°C
Voltage(2) on Any Pin with Respect to Ground	-0.5V to +5.0V
Supply Voltage (V_{CC})	-0.5V to +5.0V
Maximum Soldering Temp. (10 sec. @ 1/16 in.)	250°C
ESD (R_{ZAP} = 1.5K, C_{ZAP} = 100 pF)	2000V

*NOTICE: Stresses beyond those listed under Absolute Maximum Ratings may cause permanent damage to the device. This is a stress rating only and functional operation of the device at these or any other conditions beyond those listed under operating conditions is not implied. Exposure to Absolute Maximum Rating conditions for extended periods of time may affect device reliability.

Notes: 1. For AL parts only
2. Minimum voltage of -0.5V DC which may undershoot to -2.0V for pulses of less than 20 ns.

DC and AC Operating Range – 3.3V Operation

		AT94K Commercial	AT94K Industrial
Operating Temperature (Case)		0°C - 70°C	-40°C - 85°C
V_{CC} Power Supply		3.3V ± 0.3V	3.3V ± 0.3V
Input Voltage Level (CMOS)	High (V_{IHC})	70% - 100% V_{CC}	70% - 100% V_{CC}
	Low (V_{ILC})	0 - 30% V_{CC}	0 - 30% V_{CC}

DC Characteristics – 3.3V Operation – Commercial/Industrial (Preliminary)

T_A = -40°C to 85°C, V_{CC} = 2.7V to 3.6V (unless otherwise noted[1])

Symbol	Parameter	Conditions	Minimum[3]	Typical	Maximum[2]	Units
V_{IH}	High-level Input Voltage	CMOS	0.7 V_{CC}	–	5.5	V
V_{IH1}	Input High-voltage	XTAL	0.7 V_{CC}[3]	–	V_{CC} + 0.5	V
V_{IH2}	Input High-voltage	$\overline{RESET}$	0.85 V_{CC}[3]	–	V_{CC} + 0.5	V
V_{IL}	Low-level Input Voltage	CMOS	-0.3	–	30% V_{CC}	V
V_{IL1}	Input Low-voltage	XTAL	-0.5	–	0.1[2]	V
V_{OH}	High-level Output Voltage	I_{OH} = 4 mA V_{CC} = V_{CC} Minimum	2.1	–	–	V
		I_{OH} = 12 mA V_{CC} = 3.0V	2.1	–	–	V
		I_{OH} = 16 mA V_{CC} = 3.0V	2.1	–	–	V
V_{OL}	Low-level Output Voltage	I_{OL} = -4 mA V_{CC} = 3.0V	–	–	0.4	V
		I_{OL} = -12 mA V_{CC} = 3.0V	–	–	0.4	V
		I_{OL} = -16 mA V_{CC} = 3.0V	–	–	0.4	V
RRST	Reset Pull-up		100	–	500	kΩ
$R_{I/O}$	I/O Pin Pull-up		35	–	120	kΩ
I_{IH}	High-level Input Current	V_{IN} = V_{CC} Maximum	–	–	10	µA
		With Pull-down, V_{IN} = V_{CC}	75	150	300	µA
I_{IL}	Low-level Input Current	V_{IN} = V_{SS}	-10	–	–	µA
		With Pull-up, V_{IN} = V_{SS}	-300	-150	-75	µA
I_{OZH}	High-level Tri-state Output Leakage Current	Without Pull-down, V_{IN} = V_{CC} Maximum			10	µA
		With Pull-down, V_{IN} = V_{CC} Maximum	75	150	300	µA
I_{OZL}	Low-level Tri-state Output Leakage Current	Without Pull-up, V_{IN} = V_{SS}	-10			µA
		With Pull-up, V_{IN} = V_{SS}	-300	-150	-75	µA
I_{CC}	Standby Current Consumption	Standby, Unprogrammed	–	0.6	0.5	mA
	Power Supply Current	Active, V_{CC} = 3V[1] 25 MHz	–	80[4]	–	mA
		Idle, V_{CC} = 3V[1]	–	–	1.0	mA
		Power-down, V_{CC} = 3V[1] WDT Enable	–	60	500	µA
		Power-down, V_{CC} = 3V[1] WDT Disable	–	30	200	µA
		Power-save, V_{CC} = 3V[1] WDT Disable	–	50	400	µA
	FPGA Core Current Consumption		–	2	–	mA/MHz
C_{IN}	Input Capacitance	All Pins	–	–	10	pF

Notes:
1. Complete FPSLIC device with static FPGA core (no clock in FPGA active).
2. “Maximum” is the highest value where the pin is guaranteed to be read as Low.
3. “Minimum” is the lowest value where the pin is guaranteed to be read as High.
4. 54 mA for AT94K05 devices.

Power-On Power Supply Requirements

Atmel FPGAs require a minimum rated power supply current capacity to insure proper initialization, and the power supply ramp-up time does affect the current required. A fast ramp-up time requires more current than a slow ramp-up time.

Table 49. Power-On Power Supply Requirements[1]

Device	Description	Maximum Current[2][3]
AT94K05AL AT94K10AL	Maximum Current Supply	50 mA
AT94K40AL	Maximum Current Supply	100 mA

Notes:
1. This specification applies to Commercial and Industrial grade products only.
2. Devices are guaranteed to initialize properly at 50% of the minimum current listed above. A larger capacity power supply may result in a larger initialization current.
3. Ramp-up time is measured from 0 V DC to 3.6 V DC. Peak current required lasts less than 2 ms, and occurs near the internal power on reset threshold voltage.

FPSLIC Dual-port SRAM Characteristics

The Dual-port SRAM operates in single-edge clock controlled mode during read operations, and a double-edge controlled mode during write operations. Addresses are clocked internally on the rising edge of the clock signal (ME). Any change of address without a rising edge of ME is not considered.

In read mode, the rising clock edge triggers data read without any significant constraint on the length of the clock pulse. The WE signal must be changed and held Low before the rising edge of ME to signify a read cycle. The WE signal should then remain Low until the falling edge of the clock.

In write mode, data applied to the inputs is latched on either the falling edge of WE or the falling edge of the clock, whichever comes earlier, and written to memory. Also, WE must be High before the rising edge of ME to signify a write cycle. If data inputs change during a write cycle, only the value present at the write end is considered and written to the address clocked at the ME rise. A write cycle ending on WE fall does not turn into a read cycle – the next cycle will be a read cycle if WE remains Low during rising edge of ME.

Figure 83. SRAM Read Cycle Timing Diagram

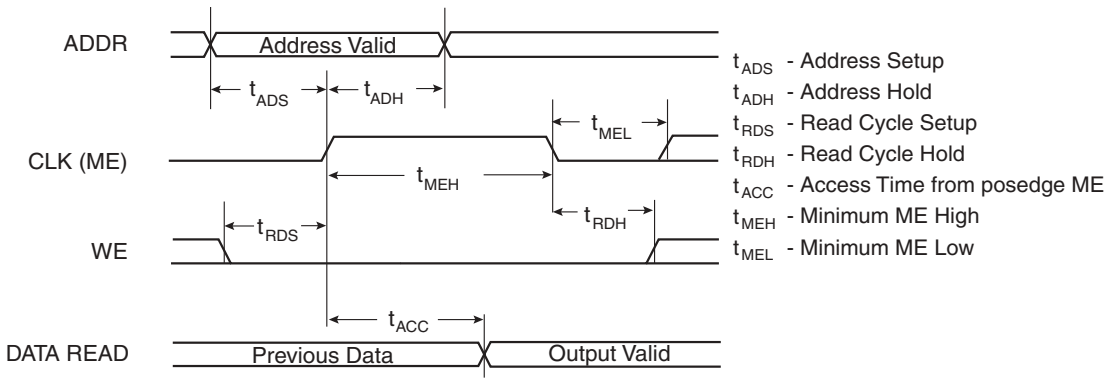

Figure 84. SRAM Write Cycle Timing Diagram

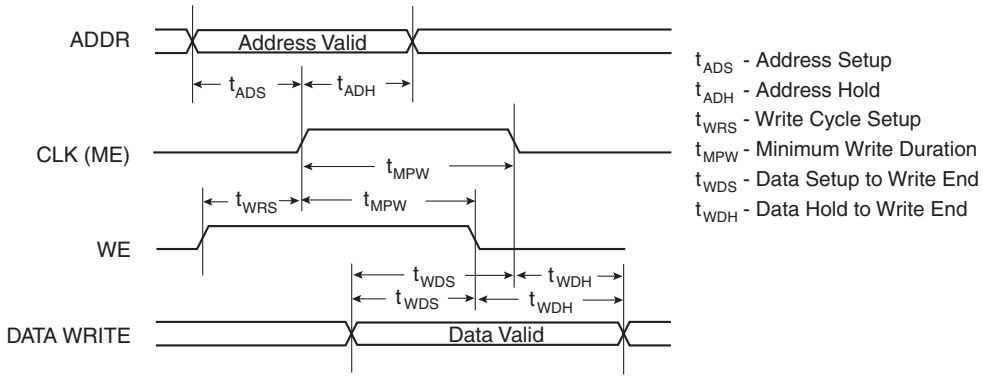

Frame Interface

The FPGA Frame Clock phase is selectable (see “System Control Register – FPGA/AVR” on page 30). This document refers to the clock at the FPGA/Dual-port SRAM interface as ME (the relation of ME to data, address and write enable does not change). By default, FrameClock is inverted (ME = ~FrameClock). Selecting the non-inverted phase assigns ME = FrameClock. Recall, the Dual-port SRAM operates in single-edge clock controlled mode during read operations, and double-edge clock controlled mode during writes. Addresses are clocked internally on the rising edge of the clock signal (ME). Any change of address without a rising edge of ME is not considered.

Table 50. SRAM Read Cycle Timing Numbers
Commercial 3.3V ± 10%/Industrial 3.3V ± 10%

Symbol	Parameter	Commercial			Industrial			Units
		Minimum	Typical	Maximum	Minimum	Typical	Maximum	
t_{ADS}	Address Setup	0.6	0.8	1.1	0.5	0.8	1.2	ns
t_{ADH}	Address Hold	0.7	0.9	1.3	0.6	0.9	1.5	ns
t_{RDS}	Read Cycle Setup	0	0	0	0	0	0	ns
t_{RDH}	Read Cycle Hold	0	0	0	0	0	0	ns
t_{ACC}	Access Time from Posedge ME	3.4	4.2	5.9	2.9	4.2	6.9	ns
t_{MEH}	Minimum ME High	0.7	0.9	1.3	0.6	0.9	1.5	ns
t_{MEl}	Minimum ME Low	0.6	0.8	1.1	0.6	0.8	1.3	ns

Table 51. SRAM Write Cycle Timing Numbers
Commercial 3.3V ± 10%/Industrial 3.3V ± 10%

Symbol	Parameter	Commercial			Industrial			Units
		Minimum	Typical	Maximum	Minimum	Typical	Maximum	
t_{ADS}	Address Setup	0.6	0.8	1.1	0.5	0.8	1.2	ns
t_{ADH}	Address Hold	0.7	0.9	1.3	0.6	0.9	1.5	ns
t_{WRS}	Write Cycle Setup	0	0	0	0	0	0	ns
t_{MPW}	Minimum Write Duration	1.4	1.8	2.5	1.2	1.8	3.0	ns
t_{WDS}	Data Setup to Write End	4.6	5.7	8.0	3.9	5.7	9.4	ns
t_{WDH}	Data Hold to Write End	0.6	0.8	1.1	0.5	0.8	1.3	ns

Table 52. FPSLIC Interface Timing Information[1]

Symbol	Parameter	3.3V Commercial ± 10%			3.3V Industrial ± 10%			Units
		Minimum	Typical	Maximum	Minimum	Typical	Maximum	
t_{IXG4}	Clock Delay From XTAL2 Pad to GCK_5 Access to FPGA Core	3.6	4.8	7.6	3.4	4.8	7.9	ns
t_{IXG5}	Clock Delay From XTAL2 Pad to GCK_6 Access to FPGA Core	3.9	5.2	8.1	3.6	5.2	8.8	ns
t_{IXC}	Clock Delay From XTAL2 Pad to AVR Core Clock	2.8	3.7	6.3	2.5	3.7	6.9	ns
t_{IXI}	Clock Delay From XTAL2 Pad to AVR I/O Clock	3.5	4.7	7.5	3.2	4.7	7.8	ns
t_{CFIR}	AVR Core Clock to FPGA I/O Read Enable	5.3	6.6	7.9	4.4	6.6	9.2	ns
t_{CFIW}	AVR Core Clock to FPGA I/O Write Enable	5.2	6.6	7.9	4.4	6.6	9.2	ns
t_{CFIS}	AVR Core Clock to FPGA I/O Select Active	6.3	7.8	9.4	5.3	7.8	11.0	ns
t_{FIRQ}	FPGA Interrupt Net Propagation Delay to AVR Core	0.2	0.2	0.3	0.1	0.2	0.3	ns
t_{IFS}	FPGA SRAM Clock to On-chip SRAM	6.1	7.7	7.7	4.9	7.7	7.7	ns
t_{FRWS}	FPGA SRAM Write Stobe to On-chip SRAM	4.4	5.5	5.5	3.7	5.5	5.5	ns
t_{FAS}	FPGA SRAM Address Valid to On-chip SRAM Address Valid	5.4	6.7	6.7	4.3	6.7	6.7	ns
t_{FDWS}	FPGA Write Data Valid to On-chip SRAM Data Valid	1.3	1.7	2.0	1.3	1.7	2.0	ns
t_{FDRS}	On-chip SRAM Data Valid to FPGA Read Data Valid	0.2	0.2	0.2	0.2	0.2	0.2	ns

Note: 1. Insertion delays are specified from XTAL2. These delays are more meaningful because the XTAL1-to-XTAL2 delay is sensitive to system loading on XTAL2. If it is necessary to drive external devices with the system clock, devices should use XTAL2 output pin. Remember that XTAL2 is inverted in comparison to XTAL1.

External Clock Drive Waveforms

Figure 85. External Clock Drive Waveforms

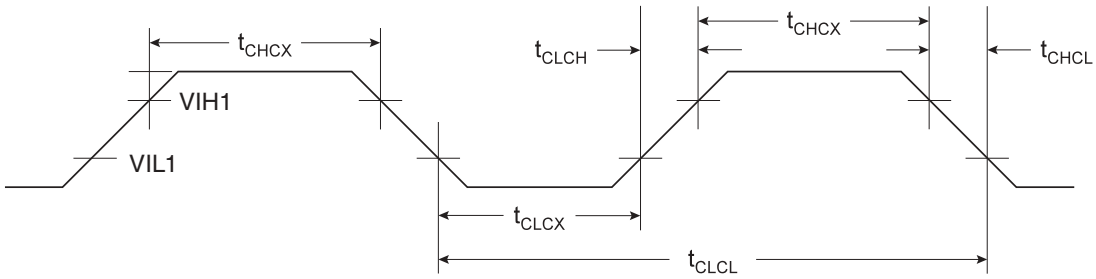

Table 53. External Clock Drive, V_{CC} = 3.0V to 3.6V

Symbol	Parameter	Minimum	Maximum	Units
$1/t_{CLCL}$	Oscillator Frequency	0	25	MHz
t_{CLCL}	Clock Period	40	–	ns
t_{CHCX}	High Time	15	–	ns
t_{CLCX}	Low Time	15	–	ns
t_{CLCH}	Rise Time	–	1.6	µs
t_{CHCL}	Fall Time	–	1.6	µs

AC Timing Characteristics – 3.3V Operation

Delays are based on fixed loads and are described in the notes.
Maximum times based on worst case: V_{CC} = 3.00V, temperature = 70°C
Minimum times based on best case: V_{CC} = 3.60V, temperature = 0°C
Maximum delays are the average of t_{PDLH} and t_{PDHL}.

Cell Function	Parameter	Path	-25	Units	Notes
Core					
2 Input Gate	t_{PD} (Maximum)	x/y -> x/y	2.9	ns	1 Unit Load
3 Input Gate	t_{PD} (Maximum)	x/y/z -> x/y	2.8	ns	1 Unit Load
3 Input Gate	t_{PD} (Maximum)	x/y/w -> x/y	3.4	ns	1 Unit Load
4 Input Gate	t_{PD} (Maximum)	x/y/w/z -> x/y	3.4	ns	1 Unit Load
Fast Carry	t_{PD} (Maximum)	y -> y	2.3	ns	1 Unit Load
Fast Carry	t_{PD} (Maximum)	x -> y	2.9	ns	1 Unit Load
Fast Carry	t_{PD} (Maximum)	y -> x	3.0	ns	1 Unit Load
Fast Carry	t_{PD} (Maximum)	x -> x	2.3	ns	1 Unit Load
Fast Carry	t_{PD} (Maximum)	w -> y	3.4	ns	1 Unit Load
Fast Carry	t_{PD} (Maximum)	w -> x	3.4	ns	1 Unit Load
Fast Carry	t_{PD} (Maximum)	z -> y	3.4	ns	1 Unit Load
Fast Carry	t_{PD} (Maximum)	z -> x	2.4	ns	1 Unit Load
DFF	t_{PD} (Maximum)	q -> x/y	2.8	ns	1 Unit Load
DFF	t_{setup} (Minimum)	x/y -> clk	–	–	–
DFF	t_{hold} (Minimum)	x/y -> clk	–	–	–
DFF	t_{PD} (Maximum)	R -> x/y	3.2	ns	1 Unit Load
DFF	t_{PD} (Maximum)	S -> x/y	3.0	ns	1 Unit Load
DFF	t_{PD} (Maximum)	q -> w	2.7	ns	–
incremental -> L	t_{PD} (Maximum)	x/y -> L	2.4	ns	–
Local Output Enable	t_{PZX} (Maximum)	oe -> L	2.8	ns	1 Unit Load
Local Output Enable	t_{PXZ} (Maximum)	oe -> L	2.4	ns	

AC Timing Characteristics – 3.3V Operation

Delays are based on fixed loads and are described in the notes.
Maximum times based on worst case: V_{CC} = 3.0V, temperature = 70°C
Minimum times based on best case: V_{CC} = 3.6V, temperature = 0°C
Maximum delays are the average of t_{PDLH} and t_{PDHL}.

All input IO characteristics measured from a V_{IH} of 50% of V_{DD} at the pad (CMOS threshold) to the internal V_{IH} of 50% of V_{DD}. All output IO characteristics are measured as the average of t_{PDLH} and t_{PDHL} to the pad V_{IH} of 50% of V_{DD}.

Cell Function	Parameter	Path	-25	Units	Notes
Repeaters					
Repeater	t_{PD} (Maximum)	L -> E	2.2	ns	1 Unit Load
Repeater	t_{PD} (Maximum)	E -> E	2.2	ns	1 Unit Load
Repeater	t_{PD} (Maximum)	L -> L	2.2	ns	1 Unit Load
Repeater	t_{PD} (Maximum)	E -> L	2.2	ns	1 Unit Load
Repeater	t_{PD} (Maximum)	E -> IO	1.4	ns	1 Unit Load
Repeater	t_{PD} (Maximum)	L -> IO	1.4	ns	1 Unit Load

All input IO characteristics measured from a V_{IH} of 50% of V_{DD} at the pad (CMOS threshold) to the internal V_{IH} of 50% of V_{DD}. All output IO characteristics are measured as the average of t_{PDLH} and t_{PDHL} to the pad V_{IH} of 50% of V_{DD}.

Cell Function	Parameter	Path	-25	Units	Notes
IO					
Input	t_{PD} (Maximum)	pad -> x/y	1.9	ns	No Extra Delay
Input	t_{PD} (Maximum)	pad -> x/y	5.8	ns	1 Extra Delay
Input	t_{PD} (Maximum)	pad -> x/y	11.5	ns	2 Extra Delays
Input	t_{PD} (Maximum)	pad -> x/y	17.4	ns	3 Extra Delays
Output, Slow	t_{PD} (Maximum)	x/y/E/L -> pad	9.1	ns	50 pf Load
Output, Medium	t_{PD} (Maximum)	x/y/E/L -> pad	7.6	ns	50 pf Load
Output, Fast	t_{PD} (Maximum)	x/y/E/L -> pad	6.2	ns	50 pf Load
Output, Slow	t_{PZX} (Maximum)	oe -> pad	9.5	ns	50 pf Load
Output, Slow	t_{PXZ} (Maximum)	oe -> pad	2.1	ns	50 pf Load
Output, Medium	t_{PZX} (Maximum)	oe -> pad	7.4	ns	50 pf Load
Output, Medium	t_{PXZ} (Maximum)	oe -> pad	2.7	ns	50 pf Load
Output, Fast	t_{PZX} (Maximum)	oe -> pad	5.9	ns	50 pf Load
Output, Fast	t_{PXZ} (Maximum)	oe -> pad	2.4	ns	50 pf Load

AC Timing Characteristics – 3.3V Operation

Delays are based on fixed loads and are described in the notes.
Maximum times based on worst case: V_{CC} = 3.0V, temperature = 70°C
Minimum times based on best case: V_{CC} = 3.6V, temperature = 0°C
Maximum delays are the average of t_{PDLH} and t_{PDHL}.

Clocks and Reset Input buffers are measured from a V_{IH} of 1.5V at the input pad to the internal V_{IH} of 50% of V_{CC}.
Maximum times for clock input buffers and internal drivers are measured for rising edge delays only.

Cell Function	Parameter	Path	Device	-25	Units	Notes
Global Clocks and Set/Reset						
GCK Input Buffer	t_{PD} (Maximum)	pad -> clock pad -> clock	AT94K05 AT94K10 AT94K40	1.2 1.5 1.9	ns ns	Rising Edge Clock
FCK Input Buffer	t_{PD} (Maximum)	pad -> clock pad -> clock	AT94K05 AT94K10 AT94K40	0.7 0.8 0.9	ns ns	Rising Edge Clock
Clock Column Driver	t_{PD} (Maximum)	clock -> colclk clock -> colclk	AT94K05 AT94K10 AT94K40	1.3 1.8 2.5	ns ns	Rising Edge Clock
Clock Sector Driver	t_{PD} (Maximum)	colclk -> secclk colclk -> secclk	AT94K05 AT94K10 AT94K40	1.0 1.0 1.0	ns ns	Rising Edge Clock
GSRN Input Buffer	t_{PD} (Maximum)	colclk -> secclk colclk -> secclk	AT94K05 AT94K10 AT94K40	5.4 8.2	ns ns	–
Global Clock to Output	t_{PD} (Maximum)	clock pad -> out clock pad -> out	AT94K05 AT94K10 AT94K40	12.6 13.4 14.5	ns ns	Rising Edge Clock Fully Loaded Clock Tree Rising Edge DFF 20 mA Output Buffer 50 pf Pin Load
Fast Clock to Output	t_{PD} (Maximum)	clock pad -> out clock pad -> out	AT94K05 AT94K10 AT94K40	12.1 12.7 13.5	ns ns	Rising Edge Clock Fully Loaded Clock Tree Rising Edge DFF 20 mA Output Buffer 50 pf Pin Load

AC Timing Characteristics – 3.3V Operation

Delays are based on fixed loads and are described in the notes.
Maximum times based on worst case: V_{CC} = 3.0V, temperature = 70°C
Minimum times based on best case: V_{CC} = 3.6V, temperature = 0°C

Cell Function	Parameter	Path	-25	Units	Notes
Async RAM					
Write	t_{WECYC} (Minimum)	cycle time	12.0	ns	–
Write	t_{WEL} (Minimum)	we	5.0	ns	Pulse Width Low
Write	t_{WEH} (Minimum)	we	5.0	ns	Pulse Width High
Write	t_{setup} (Minimum)	wr addr setup-> we	5.3	ns	
Write	t_{hold} (Minimum)	wr addr hold -> we	0.0	ns	–
Write	t_{setup} (Minimum)	din setup -> we	5.0	ns	
Write	t_{hold} (Minimum)	din hold -> we	0.0	ns	–
Write	t_{hold} (Minimum)	oe hold -> we	0.0	ns	
Write/Read	t_{PD} (Maximum)	din -> dout	8.7	ns	rd addr = wr addr
Read	t_{PD} (Maximum)	rd addr -> dout	6.3	ns	
Read	t_{PZX} (Maximum)	oe -> dout	2.9	ns	–
Read	t_{PXZ} (Maximum)	oe -> dout	3.5	ns	
Sync RAM					
Write	t_{CYC} (Minimum)	cycle time	12.0	ns	
Write	t_{CLKL} (Minimum)	clk	5.0	ns	–
Write	t_{CLKH} (Minimum)	clk	5.0	ns	Pulse Width High
Write	t_{setup} (Minimum)	we setup-> clk	3.2	ns	
Write	t_{hold} (Minimum)	we hold -> clk	0.0	ns	–
Write	t_{setup} (Minimum)	wr addr setup-> clk	5.0	ns	
Write	t_{hold} (Minimum)	wr addr hold -> clk	0.0	ns	–
Write	t_{setup} (Minimum)	wr data setup-> clk	3.9	ns	
Write	t_{hold} (Minimum)	wr data hold -> clk	0.0	ns	–
Write/Read	t_{PD} (Maximum)	din -> dout	8.7	ns	rd addr = wr addr
Write/Read	t_{PD} (Maximum)	clk -> dout	5.8	ns	rd addr = wr addr
Read	t_{PD} (Maximum)	rd addr -> dout	6.3	ns	
Read	t_{PZX} (Maximum)	oe -> dout	2.9	ns	–
Read	t_{PXZ} (Maximum)	oe -> dout	3.5	ns	

CMOS buffer delays are measured from a V_{IH} of 1/2 V_{CC} at the pad to the internal V_{IH} at A. The input buffer load is constant. Buffer delay is to a pad voltage of 1.5V with one output switching. Parameter based on characterization and simulation; not tested in production. An FPGA power calculation is available in Atmel's System Designer software (see also page 160).

Packaging and Pin List Information

FPSLIC devices should be laid out to support a split power supply for both AL and AX families. Please refer to the “Designing in Split Power Supply Support for AT94KAL and AT94SAL Devices” application note, available on the Atmel web site.

Table 54. Part and Package Combinations Available

Part #	Package	AT94K05	AT94K10	AT94K40
PLCC 84	AJ	46	46	
TQ 100	AQ	58	58	
LQ144	BQ	82	84	84
PQ 208	DQ	96	116	120

Table 55. AT94K JTAG ICE Pin List

Pin	AT94K05 96 FPGA I/O	AT94K10 192 FPGA I/O	AT94K40 384 FPGA I/O
TDI	IO34	IO50	IO98
TDO	IO38	IO54	IO102
TMS	IO43	IO63	IO123
TCK	IO44	IO64	IO124

Table 56. AT94K Pin List

AT94K05 96 FPGA I/O	AT94K10 192 FPGA I/O	AT94K40 384 FPGA I/O	Packages			
			PC84	TQ100	PQ144	PQ208
West Side						
GND	GND	GND	12	1	1	2
I/O1, GCK1 (A16)	I/O1, GCK1 (A16)	I/O1, GCK1 (A16)	13	2	2	4
I/O2 (A17)	I/O2 (A17)	I/O2 (A17)	14	3	3	5
I/O3	I/O3	I/O3			4	6
I/O4	I/O4	I/O4			5	7
I/O5 (A18)	I/O5 (A18)	I/O5 (A18)	15	4	6	8
I/O6 (A19)	I/O6 (A19)	I/O6 (A19)	16	5	7	9
		GND				
		I/O7				
		I/O8				
		I/O9				

Notes:
1. VCC is I/O high voltage. Please refer to the “Designing in Split Power Supply Support for AT94KAL and AT94SAL Devices” application note.
2. VDD is core high voltage. Please refer to the “Designing in Split Power Supply Support for AT94KAL and AT94SAL Devices” application note.
3. Unbonded pins are No Connects.

Table 56. AT94K Pin List (Continued)

AT94K05 96 FPGA I/O	AT94K10 192 FPGA I/O	AT94K40 384 FPGA I/O	Packages			
			PC84	TQ100	PQ144	PQ208
		I/O10				
		I/O11				
		I/O12				
		VCC(1)				
		GND				
		I/O13				
		I/O14				
I/O7	I/O7	I/O15				10
I/O8	I/O8	I/O16				11
	I/O9	I/O17				12
	I/O10	I/O18				13
		GND				
		I/O19				
		I/O20				
	I/O11	I/O21				
	I/O12	I/O22				
		I/O23				
		I/O24				
GND	GND	GND			8	14
I/O9, FCK1	I/O13, FCK1	I/O25, FCK1			9	15
I/O10	I/O14	I/O26			10	16
I/O11 (A20)	I/O15 (A20)	I/O27 (A20)	17	6	11	17
I/O12 (A21)	I/O16 (A21)	I/O28 (A21)	18	7	12	18
	VCC(1)	VCC(1)				
	I/O17	I/O29				
	I/O18	I/O30				
		GND				
		I/O31				
		I/O32				
		I/O33				
		I/O34				
		I/O35				
		I/O36				
		GND				

Notes:
1. VCC is I/O high voltage. Please refer to the “Designing in Split Power Supply Support for AT94KAL and AT94SAL Devices” application note.
2. VDD is core high voltage. Please refer to the “Designing in Split Power Supply Support for AT94KAL and AT94SAL Devices” application note.
3. Unbonded pins are No Connects.

Table 56. AT94K Pin List (Continued)

AT94K05 96 FPGA I/O	AT94K10 192 FPGA I/O	AT94K40 384 FPGA I/O	Packages			
			PC84	TQ100	PQ144	PQ208
		VCC(1)				
		I/O37				
		I/O38				
		I/O39				
		I/O40				
	I/O19	I/O41				19
	I/O20	I/O42				20
		GND				
I/O13	I/O21	I/O43			13	21
I/O14	I/O22	I/O44		8	14	22
		I/O45				
		I/O46				
I/O15 (A22)	I/O23 (A22)	I/O47 (A22)	19	9	15	23
I/O16 (A23)	I/O24 (A23)	I/O48 (A23)	20	10	16	24
GND	GND	GND	21	11	17	25
VDD(2)	VDD(2)	VDD(2)	22	12	18	26
I/O17 (A24)	I/O25 (A24)	I/O49 (A24)	23	13	19	27
I/O18 (A25)	I/O26 (A25)	I/O50 (A25)	24	14	20	28
		I/O51				
		I/O52				
I/O19	I/O27	I/O53		15	21	29
I/O20	I/O28	I/O54			22	30
		GND				
	I/O29	I/O55				31
	I/O30	I/O56				32
		I/O57				
		I/O58				
		I/O59				
		I/O60				
		VCC(1)				
		GND				
		I/O61				
		I/O62				
		I/O63				

Notes:
1. VCC is I/O high voltage. Please refer to the “Designing in Split Power Supply Support for AT94KAL and AT94SAL Devices” application note.
2. VDD is core high voltage. Please refer to the “Designing in Split Power Supply Support for AT94KAL and AT94SAL Devices” application note.
3. Unbonded pins are No Connects.

Table 56. AT94K Pin List (Continued)

AT94K05 96 FPGA I/O	AT94K10 192 FPGA I/O	AT94K40 384 FPGA I/O	Packages			
			PC84	TQ100	PQ144	PQ208
		I/O64				
		I/O65				
		I/O66				
		GND				
	I/O31	I/O67				
	I/O32	I/O68				
	VDD(2)	VDD(2)				
I/O21 (A26)	I/O33 (A26)	I/O69 (A26)	25	16	23	33
I/O22 (A27)	I/O34 (A27)	I/O70 (A27)	26	17	24	34
I/O23	I/O35	I/O71			25	35
I/O24, FCK2	I/O36, FCK2	I/O72, FCK2			26	36
GND	GND	GND			27	37
		I/O73				
		I/O74				
	I/O37	I/O75				
	I/O38	I/O76				
		I/O77				
		I/O78				
		GND				
		I/O79				
		I/O80				
	I/O39	I/O81				38
	I/O40	I/O82				39
I/O25	I/O41	I/O83				40
I/O26	I/O42	I/O84				41
		GND				
		VCC(1)				
		I/O85				
		I/O86				
		I/O87				
		I/O88				
I/O27 (A28)	I/O43 (A28)	I/O89 (A28)	27	18	28	42
I/O28	I/O44	I/O90		19	29	43
		GND				

Notes:
1. VCC is I/O high voltage. Please refer to the “Designing in Split Power Supply Support for AT94KAL and AT94SAL Devices” application note.
2. VDD is core high voltage. Please refer to the “Designing in Split Power Supply Support for AT94KAL and AT94SAL Devices” application note.
3. Unbonded pins are No Connects.

Table 56. AT94K Pin List (Continued)

AT94K05 96 FPGA I/O	AT94K10 192 FPGA I/O	AT94K40 384 FPGA I/O	Packages			
			PC84	TQ100	PQ144	PQ208
		I/O91				
		I/O92				
I/O29	I/O45	I/O93			30	44
I/O30	I/O46	I/O94			31	45
I/O31 ($\overline{OTS}$)	I/O47 ($\overline{OTS}$)	I/O95 ($\overline{OTS}$)	28	20	32	46
I/O32, GCK2 (A29)	I/O48, GCK2 (A29)	I/O96, GCK2 (A29)	29	21	33	47
$\overline{AVRRESET}$	$\overline{AVRRESET}$	$\overline{AVRRESET}$	30	22	34	48
GND	GND	GND	31	23	35	49
M0	M0	M0	32	24	36	50
South Side						
VCC(1)	VCC(1)	VCC(1)	33	25	37	55
M2	M2	M2	34	26	38	56
I/O33, GCK3	I/O49, GCK3	I/O97, GCK3	35	27	39	57
I/O34 (HDC/TDI)	I/O50 (HDC/TDI)	I/O98 (HDC/TDI)	36	28	40	58
I/O35	I/O51	I/O99			41	59
I/O36	I/O52	I/O100			42	60
I/O37 Not a User I/O	I/O53 Not a User I/O	I/O101		29	43	61
I/O38 (LDC/TDO)	I/O54 (LDC/TDO)	I/O102 (LDC/TDO)	37	30	44	62
		GND				
		I/O103				
		I/O104				
		I/O105				
		I/O106				
		I/O107				
		I/O108				
		VCC(1)				
		GND				
I/O39	I/O55	I/O109				63
I/O40	I/O56	I/O110				64
	I/O57	I/O111				65
	I/O58	I/O112				66

Notes:
1. VCC is I/O high voltage. Please refer to the “Designing in Split Power Supply Support for AT94KAL and AT94SAL Devices” application note.
2. VDD is core high voltage. Please refer to the “Designing in Split Power Supply Support for AT94KAL and AT94SAL Devices” application note.
3. Unbonded pins are No Connects.

Table 56. AT94K Pin List (Continued)

AT94K05 96 FPGA I/O	AT94K10 192 FPGA I/O	AT94K40 384 FPGA I/O	Packages			
			PC84	TQ100	PQ144	PQ208
		I/O113				
		I/O114				
		GND				
		I/O115				
		I/O116				
	I/O59	I/O117				
	I/O60	I/O118				
		I/O119				
		I/O120				
GND	GND	GND			45	67
I/O41	I/O61	I/O121			46	68
I/O42	I/O62	I/O122			47	69
I/O43/TMS	I/O63/TMS	I/O123/TMS	38	31	48	70
I/O44/TCK	I/O64/TCK	I/O124/TCK	39	32	49	71
	VCC(1)	VCC(1)				
	I/O65	I/O125				72
	I/O66	I/O126				73
		GND				
		I/O127				
		I/O128				
		I/O129				
		I/O130				
		I/O131				
		I/O132				
		GND				
		VCC(1)				
		I/O133				
		I/O134				
	I/O67	I/O135				
	I/O68	I/O136				
I/O45	I/O69	I/O137		33	50	74
I/O46	I/O70	I/O138		34	51	75
		GND				
		I/O139				

Notes:
1. VCC is I/O high voltage. Please refer to the “Designing in Split Power Supply Support for AT94KAL and AT94SAL Devices” application note.
2. VDD is core high voltage. Please refer to the “Designing in Split Power Supply Support for AT94KAL and AT94SAL Devices” application note.
3. Unbonded pins are No Connects.

Table 56. AT94K Pin List (Continued)

AT94K05 96 FPGA I/O	AT94K10 192 FPGA I/O	AT94K40 384 FPGA I/O	Packages			
			PC84	TQ100	PQ144	PQ208
		I/O140				
		I/O141				
		I/O142				
I/O47 (TD7)	I/O71 (TD7)	I/O143 (TD7)	40	35	52	76
I/O48 (InitErr)	I/O72 (InitErr)	I/O144 (InitErr)	41	36	53	77
VDD(2)	VDD(2)	VDD(2)	42	37	54	78
GND	GND	GND	43	38	55	79
I/O49 (TD6)	I/O73 (TD6)	I/O145 (TD6)	44	39	56	80
I/O50 (TD5)	I/O74 (TD5)	I/O146 (TD5)	45	40	57	81
		I/O147				
		I/O148				
		I/O149				
		I/O150				
		GND				
I/O51	I/O75	I/O151		41	58	82
I/O52	I/O76	I/O152		42	59	83
	I/O77	I/O153				84
	I/O78	I/O154				85
		I/O155				
		I/O156				
		VCC(1)				
		GND				
		I/O157				
		I/O158				
		I/O159				
		I/O160				
		I/O161				
		I/O162				
		GND				
	I/O79	I/O163				
	I/O80	I/O164				
	VCC(1)	VCC(1)				
I/O53 (TD4)	I/O81 (TD4)	I/O165 (TD4)	46	43	60	86
I/O54 (TD3)	I/O82 (TD3)	I/O166 (TD3)	47	44	61	87

Notes:
1. VCC is I/O high voltage. Please refer to the “Designing in Split Power Supply Support for AT94KAL and AT94SAL Devices” application note.
2. VDD is core high voltage. Please refer to the “Designing in Split Power Supply Support for AT94KAL and AT94SAL Devices” application note.
3. Unbonded pins are No Connects.

Table 56. AT94K Pin List (Continued)

AT94K05 96 FPGA I/O	AT94K10 192 FPGA I/O	AT94K40 384 FPGA I/O	Packages			
			PC84	TQ100	PQ144	PQ208
I/O55	I/O83	I/O167			62	88
I/O56	I/O84	I/O168			63	89
GND	GND	GND			64	90
		I/O169				
		I/O170				
	I/O85	I/O171				
	I/O86	I/O172				
		I/O173				
		I/O174				
		GND				
		I/O175				
		I/O176				
	I/O87	I/O177				91
	I/O88	I/O178				92
I/O57	I/O89	I/O179				93
I/O58	I/O90	I/O180				94
		GND				
		VCC(1)				
		I/O181				
		I/O182				
I/O59 (TD2)	I/O91 (TD2)	I/O183 (TD2)	48	45	65	95
I/O60 (TD1)	I/O92 (TD1)	I/O184 (TD1)	49	46	66	96
		I/O185				
		I/O186				
		GND				
		I/O187				
		I/O188				
I/O61	I/O93	I/O189			67	97
I/O62	I/O94	I/O190			68	98
I/O63 (TD0)	I/O95 (TD0)	I/O191 (TD0)	50	47	69	99
I/O64, GCK4	I/O96, GCK4	I/O192, GCK4	51	48	70	100
GND	GND	GND	52	49	71	101
$\overline{\text{CON}}$	$\overline{\text{CON}}$	$\overline{\text{CON}}$	53	50	72	103
East Side						

Notes:
1. VCC is I/O high voltage. Please refer to the “Designing in Split Power Supply Support for AT94KAL and AT94SAL Devices” application note.
2. VDD is core high voltage. Please refer to the “Designing in Split Power Supply Support for AT94KAL and AT94SAL Devices” application note.
3. Unbonded pins are No Connects.

Table 56. AT94K Pin List (Continued)

AT94K05 96 FPGA I/O	AT94K10 192 FPGA I/O	AT94K40 384 FPGA I/O	Packages			
			PC84	TQ100	PQ144	PQ208
VCC(1)	VCC(1)	VCC(1)	54	51	73	106
$\overline{\text{RESET}}$	$\overline{\text{RESET}}$	$\overline{\text{RESET}}$	55	52	74	108
PE0	PE0	PE0	56	53	75	109
PE1	PE1	PE1	57	54	76	110
PD0	PD0	PD0			77	111
PD1	PD1	PD1			78	112
		GND				
		VCC(1)				
		GND				
PE2	PE2	PE2	58	55	79	113
PD2	PD2	PD2		56	80	114
		GND				
No Connect	No Connect	No Connect			81	119
PD3	PD3	PD3			82	120
PD4	PD4	PD4			83	121
	VCC(1)	VCC(1)				
PE3	PE3	PE3	59	57	84	122
$\overline{\text{CS0}}$, Cs0n	$\overline{\text{CS0}}$, Cs0n	$\overline{\text{CS0}}$, Cs0n	60	58	85	123
		GND				
		GND				
		VCC(1)				
SDA	SDA	SDA				124
SCL	SCL	SCL				125
		GND				
PD5	PD5	PD5		59	86	126
PD6	PD6	PD6		60	87	127
PE4	PE4	PE4	61	61	88	128
PE5	PE5	PE5	62	62	89	129
VDD(2)	VDD(2)	VDD(2)	63	63	90	130
GND	GND	GND	64	64	91	131
PE6	PE6	PE6	65	65	92	132
PE7 ($\overline{\text{CHECK}}$)	PE7 ($\overline{\text{CHECK}}$)	PE7 ($\overline{\text{CHECK}}$)	66	66	93	133
PD7	PD7	PD7		67	94	134

Notes:
1. VCC is I/O high voltage. Please refer to the “Designing in Split Power Supply Support for AT94KAL and AT94SAL Devices” application note.
2. VDD is core high voltage. Please refer to the “Designing in Split Power Supply Support for AT94KAL and AT94SAL Devices” application note.
3. Unbonded pins are No Connects.

Table 56. AT94K Pin List (Continued)

AT94K05 96 FPGA I/O	AT94K10 192 FPGA I/O	AT94K40 384 FPGA I/O	Packages			
			PC84	TQ100	PQ144	PQ208
INTP0	INTP0	INTP0			95	135
		GND				
		VCC(1)				
		GND				
		GND				
XTAL1	XTAL1	XTAL1	67	68	96	138
XTAL2	XTAL2	XTAL2	68	69	97	139
	VDD(2)	VDD(2)				
RX0	RX0	RX0			98	140
TX0	TX0	TX0			99	141
GND	GND	GND			100	142
		GND				
INTP1	INTP1	INTP1				145
INTP2	INTP2	INTP2				146
		GND				
		VCC(1)				
TOSC1	TOSC1	TOSC1	69	70	101	147
TOSC2	TOSC2	TOSC2	70	71	102	148
		GND				
RX1	RX1	RX1			103	149
TX1	TX1	TX1			104	150
D0	D0	D0	71	72	105	151
INTP3 (CSOUT)	INTP3 (CSOUT)	INTP3 (CSOUT)	72	73	106	152
CCLK	CCLK	CCLK	73	74	107	153
VCC(1)	VCC(1)	VCC(1)	74	75	108	154
I/O65:95 Are Unbonded(3)	I/O97:144 Are Unbonded(3)	I/O193:288 Are Unbonded(3)				
North Side						
Testclock	Testclock	Testclock	75	76	109	159
GND	GND	GND	76	77	110	160
I/O97 (A0)	I/O145 (A0)	I/O289 (A0)	77	78	111	161
I/O98, GCK7 (A1)	I/O146, GCK7 (A1)	I/O290, GCK7 (A1)	78	79	112	162
I/O99	I/O147	I/O291			113	163

Notes:
1. VCC is I/O high voltage. Please refer to the “Designing in Split Power Supply Support for AT94KAL and AT94SAL Devices” application note.
2. VDD is core high voltage. Please refer to the “Designing in Split Power Supply Support for AT94KAL and AT94SAL Devices” application note.
3. Unbonded pins are No Connects.

Table 56. AT94K Pin List (Continued)

AT94K05 96 FPGA I/O	AT94K10 192 FPGA I/O	AT94K40 384 FPGA I/O	Packages			
			PC84	TQ100	PQ144	PQ208
I/O100	I/O148	I/O292			114	164
		I/O293				
		I/O294				
		GND				
		I/O295				
		I/O296				
I/O101 ($\overline{CS1}$, A2)	I/O149 ($\overline{CS1}$, A2)	I/O297 ($\overline{CS1}$, A2)	79	80	115	165
I/O102 (A3)	I/O150 (A3)	I/O298 (A3)	80	81	116	166
		I/O299				
		I/O300				
		VCC(1)				
		GND				
I/O104	I/O151	I/O301	Shorted to Testclock	Shorted to Testclock	Shorted to Testclock	Shorted to Testclock
	I/O152	I/O302				
I/O103	I/O153	I/O303			117	167
	I/O154	I/O304				168
		I/O305				
		I/O306				
		GND				
		I/O307				
		I/O308				
	I/O155	I/O309				169
	I/O156	I/O310				170
		I/O311				
		I/O312				
GND	GND	GND			118	171
I/O105	I/O157	I/O313			119	172
I/O106	I/O158	I/O314			120	173
	I/O159	I/O315				
	I/O160	I/O316				
	VCC(1)	VCC(1)				
		I/O317				
		I/O318				

Notes:
1. VCC is I/O high voltage. Please refer to the “Designing in Split Power Supply Support for AT94KAL and AT94SAL Devices” application note.
2. VDD is core high voltage. Please refer to the “Designing in Split Power Supply Support for AT94KAL and AT94SAL Devices” application note.
3. Unbonded pins are No Connects.

Table 56. AT94K Pin List (Continued)

AT94K05 96 FPGA I/O	AT94K10 192 FPGA I/O	AT94K40 384 FPGA I/O	Packages			
			PC84	TQ100	PQ144	PQ208
		GND				
		I/O319				
		I/O320				
		I/O321				
		I/O322				
		I/O323				
		I/O324				
		GND				
		VCC(1)				
I/O107 (A4)	I/O161 (A4)	I/O325 (A4)	81	82	121	174
I/O108 (A5)	I/O162 (A5)	I/O326 (A5)	82	83	122	175
		GND				
	I/O163	I/O327				176
	I/O164	I/O328				177
I/O109	I/O165	I/O329		84	123	178
I/O110	I/O166	I/O330		85	124	179
		GND				
		I/O331				
		I/O332				
		I/O333				
		I/O334				
I/O111 (A6)	I/O167 (A6)	I/O335 (A6)	83	86	125	180
I/O112 (A7)	I/O168 (A7)	I/O336 (A7)	84	87	126	181
GND	GND	GND	1	88	127	182
VDD(2)	VDD(2)	VDD(2)	2	89	128	183
I/O113 (A8)	I/O169 (A8)	I/O337 (A8)	3	90	129	184
I/O114 (A9)	I/O170 (A9)	I/O338 (A9)	4	91	130	185
		I/O339				
		I/O340				
		I/O341				
		I/O342				
		GND				
I/O115	I/O171	I/O343		92	131	186
I/O116	I/O172	I/O344		93	132	187

Notes:
1. VCC is I/O high voltage. Please refer to the “Designing in Split Power Supply Support for AT94KAL and AT94SAL Devices” application note.
2. VDD is core high voltage. Please refer to the “Designing in Split Power Supply Support for AT94KAL and AT94SAL Devices” application note.
3. Unbonded pins are No Connects.

Table 56. AT94K Pin List (Continued)

AT94K05 96 FPGA I/O	AT94K10 192 FPGA I/O	AT94K40 384 FPGA I/O	Packages			
			PC84	TQ100	PQ144	PQ208
	I/O173	I/O345				188
	I/O174	I/O346				189
I/O117 (A10)	I/O175 (A10)	I/O347 (A10)	5	94	133	190
I/O118 (A11)	I/O176 (A11)	I/O348 (A11)	6	95	134	191
		VCC(1)				
		GND				
		I/O349				
		I/O350				
		I/O351				
		I/O352				
		I/O353				
		I/O354				
		GND				
		I/O355				
		I/O356				
	VDD(2)	VDD(2)				
	I/O177	I/O357				
	I/O178	I/O358				
I/O119	I/O179	I/O359			135	192
I/O120	I/O180	I/O360			136	193
GND	GND	GND			137	194
		I/O361				
		I/O362				
	I/O181	I/O363				195
	I/O182	I/O364				196
		I/O365				
		I/O366				
		GND				
		I/O367				
		I/O368				
I/O121	I/O183	I/O369				197
I/O122	I/O184	I/O370				198
I/O123 (A12)	I/O185 (A12)	I/O371 (A12)	7	96	138	199
I/O124 (A13)	I/O186 (A13)	I/O372 (A13)	8	97	139	200

Notes:
1. VCC is I/O high voltage. Please refer to the “Designing in Split Power Supply Support for AT94KAL and AT94SAL Devices” application note.
2. VDD is core high voltage. Please refer to the “Designing in Split Power Supply Support for AT94KAL and AT94SAL Devices” application note.
3. Unbonded pins are No Connects.

Table 56. AT94K Pin List (Continued)

AT94K05 96 FPGA I/O	AT94K10 192 FPGA I/O	AT94K40 384 FPGA I/O	Packages			
			PC84	TQ100	PQ144	PQ208
		GND				
		VCC(1)				
		I/O373				
		I/O374				
		I/O375				
		I/O376				
		I/O377				
		I/O378				
		GND				
	I/O187	I/O379				
	I/O188	I/O380				
I/O125	I/O189	I/O381			140	201
I/O126	I/O190	I/O382			141	202
I/O127 (A14)	I/O191 (A14)	I/O383 (A14)	9	98	142	203
I/O128, GCK8 (A15)	I/O192, GCK8 (A15)	I/O384, GCK8 (A15)	10	99	143	204
VCC(1)	VCC(1)	VCC(1)	11	100	144	205

Notes:
1. VCC is I/O high voltage. Please refer to the “Designing in Split Power Supply Support for AT94KAL and AT94SAL Devices” application note.
2. VDD is core high voltage. Please refer to the “Designing in Split Power Supply Support for AT94KAL and AT94SAL Devices” application note.
3. Unbonded pins are No Connects.

Ordering Information

Usable Gates	Speed Grade	Ordering Code	Package	Operation Range
5,000	-25 MHz	AT94K05AL-25AJC AT94K05AL-25AQC AT94K05AL-25BQC AT94K05AL-25DQC	84J 100A 144L1 208Q1	Commercial (0°C - 70°C)
		AT94K05AL-25AJI AT94K05AL-25AQI AT94K05AL-25BQI AT94K05AL-25DQI	84J 100A 144L1 208Q1	Industrial (-40°C - 85°C)
10,000	-25 MHz	AT94K10AL-25AJC AT94K10AL-25AQC AT94K10AL-25BQC AT94K10AL-25DQC	84J 100A 144L1 208Q1	Commercial (0°C - 70°C)
		AT94K10AL-25AJI AT94K10AL-25AQI AT94K10AL-25BQI AT94K10AL-25DQI	84J 100A 144L1 208Q1	Industrial (-40°C - 85°C)
40,000	-25 MHz	AT94K40AL-25BQC AT94K40AL-25DQC	144L1 208Q1	Commercial (0°C - 70°C)
		AT94K40AL-25BQI AT94K40AL-25DQI	144L1 208Q1	Industrial (-40°C - 85°C)

Package Type	
84J	84-lead, Plastic J-leaded Chip Carrier (PLCC)
100A	100-lead, Thin (1.0 mm) Plastic Quad Flat Package (TQFP)
144L1	144-lead, Low Profile Plastic Gull Wing Quad Flat Package (LQFP)
208Q1	208-lead, Plastic Gull Wing Quad Flat Package (PQFP)

Packaging Information

84J – PLCC

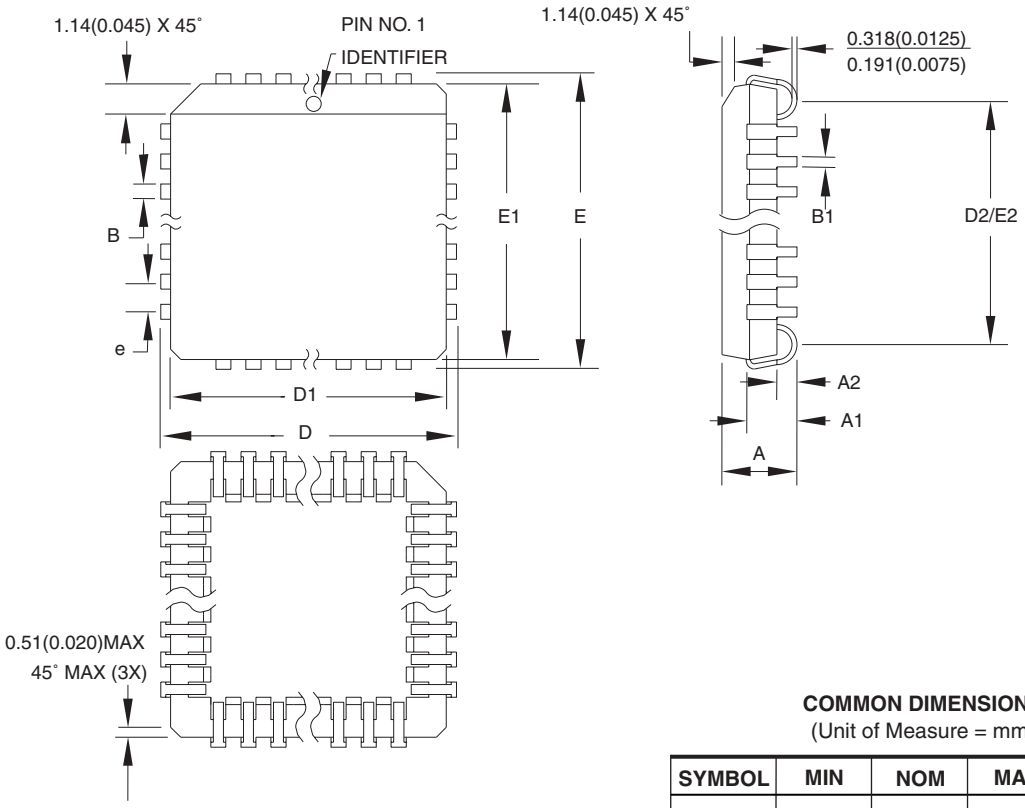

COMMON DIMENSIONS
(Unit of Measure = mm)

SYMBOL	MIN	NOM	MAX	NOTE
A	4.191	–	4.572	
A1	2.286	–	3.048	
A2	0.508	–	–	
D	30.099	–	30.353	
D1	29.210	–	29.413	Note 2
E	30.099	–	30.353	
E1	29.210	–	29.413	Note 2
D2/E2	27.686	–	28.702	
B	0.660	–	0.813	
B1	0.330	–	0.533	
e	1.270 TYP			

Notes:
1. This package conforms to JEDEC reference MS-018, Variation AF.
2. Dimensions D1 and E1 do not include mold protrusion. Allowable protrusion is .010"(0.254 mm) per side. Dimension D1 and E1 include mold mismatch and are measured at the extreme material condition at the upper or lower parting line.
3. Lead coplanarity is 0.004" (0.102 mm) maximum.

10/04/01

	TITLE	DRAWING NO.	REV.
2325 Orchard Parkway San Jose, CA 95131	**84J**, 84-lead, Plastic J-leaded Chip Carrier (PLCC)	84J	B

100A – TQFP

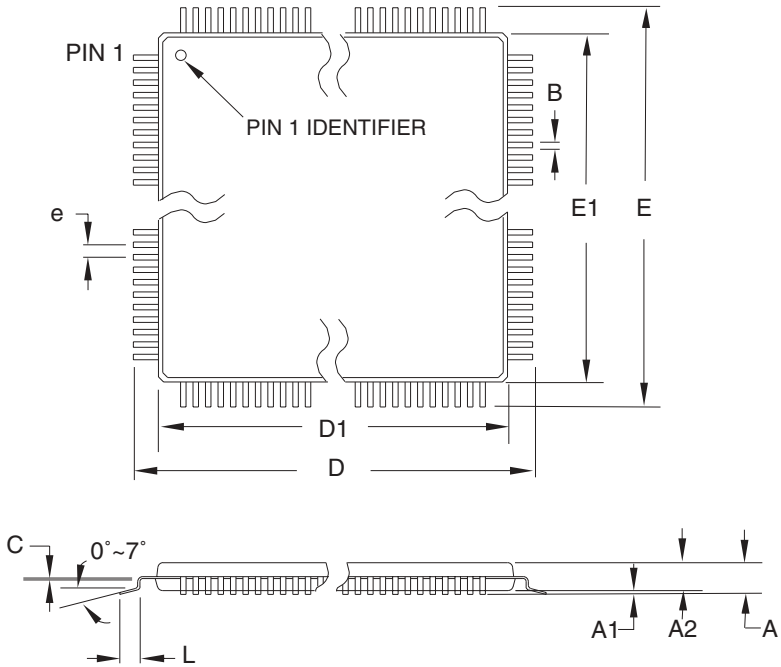

COMMON DIMENSIONS
(Unit of Measure = mm)

SYMBOL	MIN	NOM	MAX	NOTE
A	–	–	1.20	
A1	0.05	–	0.15	
A2	0.95	1.00	1.05	
D	15.75	16.00	16.25	
D1	13.90	14.00	14.10	Note 2
E	15.75	16.00	16.25	
E1	13.90	14.00	14.10	Note 2
B	0.17	–	0.27	
C	0.09	–	0.20	
L	0.45	–	0.75	
e	0.50 TYP			

Notes:
1. This package conforms to JEDEC reference MS-026, Variation AED.
2. Dimensions D1 and E1 do not include mold protrusion. Allowable protrusion is 0.25 mm per side. Dimensions D1 and E1 are maximum plastic body size dimensions including mold mismatch.
3. Lead coplanarity is 0.08 mm maximum.

10/5/2001

	TITLE	DRAWING NO.	REV.
ATMEL 2325 Orchard Parkway San Jose, CA 95131	**100A,** 100-lead, 14 x 14 mm Body Size, 1.0 mm Body Thickness, 0.5 mm Lead Pitch, Thin Profile Plastic Quad Flat Package (TQFP)	100A	C

144L1 – LQFP

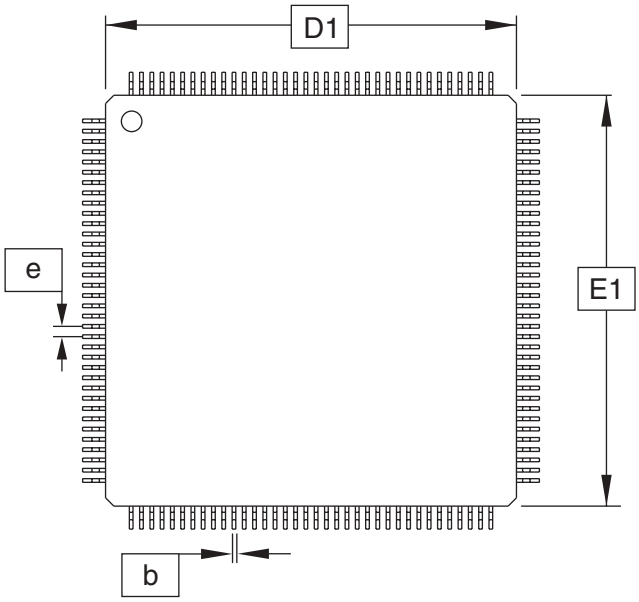

Top View

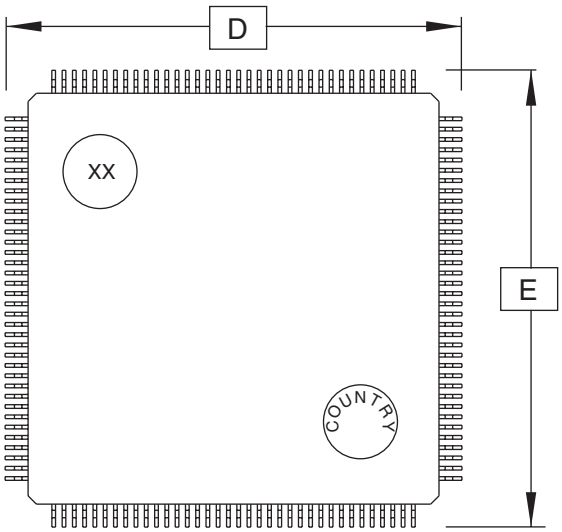

Bottom View

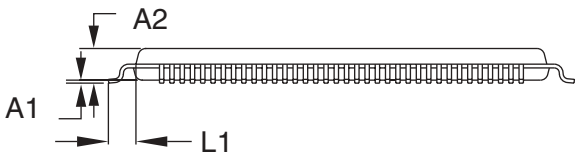

Side View

COMMON DIMENSIONS
(Unit of Measure = mm)

SYMBOL	MIN	NOM	MAX	NOTE
A1	0.05		0.15	6
A2	1.35	1.40	1.45	
D	22.00 BSC			
D1	20.00 BSC			2, 3
E	22.00 BSC			
E1	20.00 BSC			2, 3
e	0.50 BSC			
b	0.17	0.22	0.27	4, 5
L1	1.00 REF			

Notes:
1. This drawing is for general information only; refer to JEDEC Drawing MS-026 for additional information.
2. The top package body size may be smaller than the bottom package size by as much as 0.15 mm.
3. Dimensions D1 and E1 do not include mold protrusions. Allowable protrusion is 0.25 mm per side. D1 and E1 are maximum plastic body size dimensions including mold mismatch.
4. Dimension b does not include Dambar protrusion. Allowable Dambar protrusion shall not cause the lead width to exceed the maximum b dimension by more than 0.08 mm. Dambar cannot be located on the lower radius or the foot. Minimum space between protrusion and an adjacent lead is 0.07 mm for 0.4 and 0.5 mm pitch packages.
5. These dimensions apply to the flat section of the lead between 0.10 mm and 0.25 mm from the lead tip.
6. A1 is defined as the distance from the seating place to the lowest point on the package body.

11/30/01

	TITLE	DRAWING NO.	REV.
2325 Orchard Parkway San Jose, CA 95131	**144L1**, 144-lead (20 x 20 x 1.4 mm Body), Low Profile Plastic Quad Flat Pack (LQFP)	144L1	A

208Q1 – PQFP

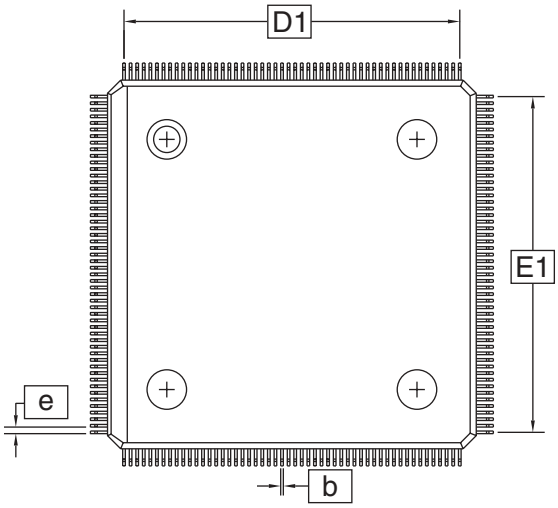

Top View

Side View

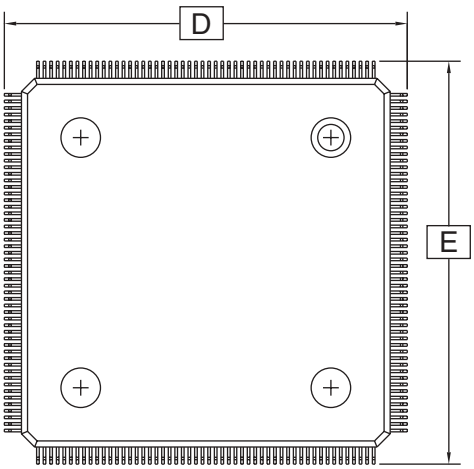

Bottom View

COMMON DIMENSIONS
(Unit of Measure = mm)

SYMBOL	MIN	NOM	MAX	NOTE
A1	0.25	–	0.50	
A2	3.20	3.40	3.60	
D	30.60 BSC			
D1	28.00 BSC			2, 3
E	30.60 BSC			
E1	28.00 BSC			2, 3
e	0.50 BSC			
b	0.17	–	0.27	4
L1	1.30 REF			

Notes:
1. This drawing is for general information only; refer to JEDEC Drawing MS-129, Variation FA-1, for proper dimensions, tolerances, datums, etc.
2. The top package body size may be smaller than the bottom package size by as much as 0.15 mm.
3. Dimensions D1 and E1 do not include mold protrusions. Allowable protrusion is 0.25 mm per side. D1 and E1 are maximum plastic body size dimensions including mold mismatch.
4. Dimension b does not include Dambar protrusion. Allowable Dambar protrusion shall not cause the lead width to exceed the maximum b dimension by more than 0.08 mm. Dambar cannot be located on the lower radius or the foot. Minimum space between protrusion and an adjacent lead is 0.07 mm.

07/23/02

	TITLE	DRAWING NO.	REV.
ATMEL 2325 Orchard Parkway San Jose, CA 95131	**208Q1**, 208-lead (28 x 28 mm Body, 2.6 Form Opt.), Plastic Quad Flat Pack (PQFP)	208Q1	B

Thermal Coefficient Table

Package Style	Lead Count	Theta J-A 0 LFPM	Theta J-A 225 LFPM	Theta J-A 500 LPFM	Theta J-C
PLCC	84	37	30	25	12
TQFP	100	47	39	33	22
LQFP	144	33	27	23	8.5
PQFP	208	32	28	24	10

Table of Contents

Features ***1***

Description ***2***

FPGA Core ***5***

Fast, Flexible and Efficient SRAM 5
Fast, Efficient Array and Vector Multipliers 5
Cache Logic Design 5
Automatic Component Generators 5
The Symmetrical Array 5
The Busing Network 6
Cell Connections 8
The Cell 8
RAM 10
Clocking and Set/Reset 14

FPGA/AVR Interface and System Control ***21***

FPGA/AVR Interface– Memory-mapped Peripherals 21
Program and Data SRAM 22
Data SRAM Access by FPGA – FPGAFrame Mode 24
SRAM Access by FPGA/AVR 24
AVR Cache Mode 29
Resets 29
System Control 30

AVR Core and Peripherals ***34***

Instruction Set Nomenclature (Summary) 35
Complete Instruction Set Summary 36
Pin Descriptions 40
Clock Options 41
Architectural Overview 42
General-purpose Register File 43
X-register, Y-register and Z-register 44
ALU – Arithmetic Logic Unit 44
Multiplier Unit 44
SRAM Data Memory 44
Memory-mapped I/O 47
Software Control of System Configuration 51
FPGA Cache Logic 53
FPGA I/O Selection by AVR 53
FPGA I/O Interrupt Control by AVR 57
Reset and Interrupt Handling 58
Sleep Modes 66

JTAG Interface and On-chip Debug System 68
IEEE 1149.1 (JTAG) Boundary-scan 73
Bypass Register 74
Device Identification Register 74
AVR Reset Register 75
Timer/Counters 85
Timer/Counter Prescalers 85
8-bit Timers/Counters T/C0 and T/C2 86
Timer/Counter1 95
Watchdog Timer 104
Multiplier 106
UARTs 119
2-wire Serial Interface (Byte Oriented) 130
I/O Ports 147

AC & DC Timing Characteristics 159
Absolute Maximum Ratings 159
DC and AC Operating Range – 3.3V Operation 159

Power-On Power Supply Requirements 161
FPSLIC Dual-port SRAM Characteristics 162
External Clock Drive Waveforms 165

Packaging and Pin List Information 170

Packaging Information 185
84J – PLCC 185
100A – TQFP 186
144L1 – LQFP 187
208Q1 – PQFP 188

Table of Contents i

Atmel Headquarters

Corporate Headquarters
2325 Orchard Parkway
San Jose, CA 95131
TEL 1(408) 441-0311
FAX 1(408) 487-2600

Europe
Atmel Sarl
Route des Arsenaux 41
Case Postale 80
CH-1705 Fribourg
Switzerland
TEL (41) 26-426-5555
FAX (41) 26-426-5500

Asia
Room 1219
Chinachem Golden Plaza
77 Mody Road Tsimhatsui
East Kowloon
Hong Kong
TEL (852) 2721-9778
FAX (852) 2722-1369

Japan
9F, Tonetsu Shinkawa Bldg.
1-24-8 Shinkawa
Chuo-ku, Tokyo 104-0033
Japan
TEL (81) 3-3523-3551
FAX (81) 3-3523-7581

Atmel Operations

Memory
2325 Orchard Parkway
San Jose, CA 95131
TEL 1(408) 441-0311
FAX 1(408) 436-4314

Microcontrollers
2325 Orchard Parkway
San Jose, CA 95131
TEL 1(408) 441-0311
FAX 1(408) 436-4314

La Chantrerie
BP 70602
44306 Nantes Cedex 3, France
TEL (33) 2-40-18-18-18
FAX (33) 2-40-18-19-60

ASIC/ASSP/Smart Cards
Zone Industrielle
13106 Rousset Cedex, France
TEL (33) 4-42-53-60-00
FAX (33) 4-42-53-60-01

1150 East Cheyenne Mtn. Blvd.
Colorado Springs, CO 80906
TEL 1(719) 576-3300
FAX 1(719) 540-1759

Scottish Enterprise Technology Park
Maxwell Building
East Kilbride G75 0QR, Scotland
TEL (44) 1355-803-000
FAX (44) 1355-242-743

RF/Automotive
Theresienstrasse 2
Postfach 3535
74025 Heilbronn, Germany
TEL (49) 71-31-67-0
FAX (49) 71-31-67-2340

1150 East Cheyenne Mtn. Blvd.
Colorado Springs, CO 80906
TEL 1(719) 576-3300
FAX 1(719) 540-1759

Biometrics/Imaging/Hi-Rel MPU/
High Speed Converters/RF Datacom
Avenue de Rochepleine
BP 123
38521 Saint-Egreve Cedex, France
TEL (33) 4-76-58-30-00
FAX (33) 4-76-58-34-80

Atmel Programmable SLI Hotline
(408) 436-4119

Atmel Programmable SLI e-mail
fpslic@atmel.com

FAQ
Available on web site

e-mail
literature@atmel.com

Web Site
http://www.atmel.com

© Atmel Corporation 2002.
Atmel Corporation makes no warranty for the use of its products, other than those expressly contained in the Company's standard warranty which is detailed in Atmel's Terms and Conditions located on the Company's web site. The Company assumes no responsibility for any errors which may appear in this document, reserves the right to change devices or specifications detailed herein at any time without notice, and does not make any commitment to update the information contained herein. No licenses to patents or other intellectual property of Atmel are granted by the Company in connection with the sale of Atmel products, expressly or by implication. Atmel's products are not authorized for use as critical components in life support devices or systems.

ATMEL®, AVR® and AVR Studio® are the registered trademarks of Atmel.

Microsoft®, Windows® and Windows NT® are the registered trademarks of Microsoft Corporation.

Other terms and product names may be the trademarks of others.

Printed on recycled paper.

Rev. 1138F–FPSLI–06/02

OCEAN CHIPS
Океан Электроники
Поставка электронных компонентов

Компания «Океан Электроники» предлагает заключение долгосрочных отношений при поставках импортных электронных компонентов на взаимовыгодных условиях!

Наши преимущества:

- Поставка оригинальных импортных электронных компонентов напрямую с производств Америки, Европы и Азии, а так же с крупнейших складов мира;
- Широкая линейка поставок активных и пассивных импортных электронных компонентов (более 30 млн. наименований);
- Поставка сложных, дефицитных, либо снятых с производства позиций;
- Оперативные сроки поставки под заказ (от 5 рабочих дней);
- Экспресс доставка в любую точку России;
- Помощь Конструкторского Отдела и консультации квалифицированных инженеров;
- Техническая поддержка проекта, помощь в подборе аналогов, поставка прототипов;
- Поставка электронных компонентов под контролем ВП;
- Система менеджмента качества сертифицирована по Международному стандарту ISO 9001;
- При необходимости вся продукция военного и аэрокосмического назначения проходит испытания и сертификацию в лаборатории (по согласованию с заказчиком);
- Поставка специализированных компонентов военного и аэрокосмического уровня качества (Xilinx, Altera, Analog Devices, Intersil, Interpoint, Microsemi, Actel, Aeroflex, Peregrine, VPT, Syfer, Eurofarad, Texas Instruments, MS Kennedy, Miteq, Cobham, E2V, MA-COM, Hittite, Mini-Circuits, General Dynamics и др.);

Компания «Океан Электроники» является официальным дистрибьютором и эксклюзивным представителем в России одного из крупнейших производителей разъемов военного и аэрокосмического назначения **«JONHON»**, а так же официальным дистрибьютором и эксклюзивным представителем в России производителя высокотехнологичных и надежных решений для передачи СВЧ сигналов **«FORSTAR»**.

AVIC JONHON

«JONHON» (основан в 1970 г.)

Разъемы специального, военного и аэрокосмического назначения:

(Применяются в военной, авиационной, аэрокосмической, морской, железнодорожной, горно- и нефтедобывающей отраслях промышленности)

«FORSTAR» (основан в 1998 г.)

ВЧ соединители, коаксиальные кабели, кабельные сборки и микроволновые компоненты:

(Применяются в телекоммуникациях гражданского и специального назначения, в средствах связи, РЛС, а так же военной, авиационной и аэрокосмической отраслях промышленности).

FORSTAR®

Телефон: 8 (812) 309-75-97 (многоканальный)
Факс: 8 (812) 320-03-32
Электронная почта: ocean@oceanchips.ru
Web: http://oceanchips.ru/
Адрес: 198099, г. Санкт-Петербург, ул. Калинина, д. 2, корп. 4, лит. А