Littelfuse®

Expertise Applied | Answers Delivered

POWR-GARD® PRODUCTS CATALOG

POWR-GARD PRODUCTS

Indicating Fuses • Blocks & Holders • Relays & Controls • MOVs • Medium Voltage Fuses

Littelfuse®

POWR-GARD® PRODUCTS CATALOG

Littelfuse® POWR-GARD®— Protecting People and Equipment

As the global leader in circuit protection, Littelfuse has extensive experience in helping customers improve their electrical systems and the safety of their installations. Offering more than well-designed products, our technical expertise brings years of experience and product design support to your application.

Littelfuse can provide immediate access to specialized technical resources, online references or application support in the field. This catalog outlines the Littelfuse POWR-GARD industrial circuit protection products and the technical capabilities we offer for your application.

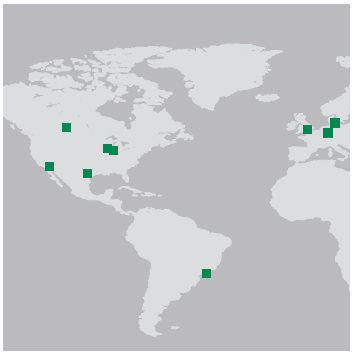

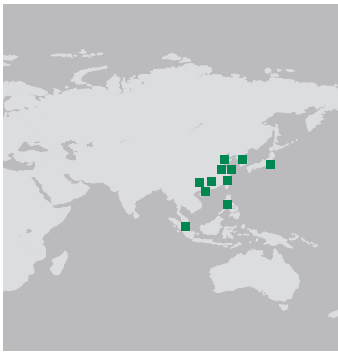

Littelfuse App!

Download our free Littelfuse Catalogs and Literature App to keep our products and technical resources at your finger tips!

A Broad Portfolio of Circuit Protection Products, Relays and Controls

Fuses & Holders

Fuses and Fuse Holders
Medium Voltage Fuses
Indicating Products
Up-LINK™ Remote Indication
OEM Custom Products

Relays & Controls

Ground Fault Protection
Trailing Cable Protection
Resistance Grounding
Motor & Pump Protection
Arc-Flash Protection
Generator Control
Engine Control & Diagnosis
Custom Products

Safety Resources

Datasheets
White Papers
Online Library
Training Videos
Technical Articles
High Power Test Lab

Table of Contents

Littelfuse®
Expertise Applied | Answers Delivered

1 Fuses

Class L Fuses 9
Class RK1 Fuses 14
Class RK5 Fuses 17
Class K/H Fuses 21
Class J Fuses 23
Class T Fuses 26
Class G Fuses 28
Class CC/CD Fuses 29
UL Supplemental/10 x 38 Fuses 32

2 Automotive Blade & Electronic Fuses

Glass/Electronic Fuses 35
Automotive/Blade Fuses 38

3 Medium Voltage Fuses

Medium Voltage Fuses Overview 41
R-Rated Medium Voltage Fuses 43
E-Rated Medium Voltage Fuses 44

4 Telecommunication Fuses

Telecommunications Power Fuses 52
Telecommunications Disconnect Switch 56

5 Special Purpose Fuses

Solar Products Overview 58
Solar Rated Fuses 60
Forklift/Stud Mounted Fuses 62
Plug Fuses 63
MEGA® Bolt-Down Fuses 63
In-Line Fuses & Holders 64
Cable Limiters 65
L Series (Traditional) Semiconductor Fuses 66
LA Series (Alternate Dimension) Semiconductor Fuses 68
Square Body Semiconductor Fuses 74
OEM Custom Products 79

6 Fuse Blocks & Holders

LF Series Fuse Blocks Overview 81
Class J Fuse Blocks 83
Class H/K5 & R Fuse Blocks 86
Class T Fuse Blocks 92
Class G Fuse Blocks 97
Class CC/CD & Midget Fuse Blocks 99
LF Series Fuse Block Covers 103
LFJ Solar Rated Fuse Block 104
Dead Front Fuse Holders 107
Miscellaneous Fuse Blocks & Holders 114
Semiconductor Fuse Blocks 120
Distribution & Splicer Blocks 122
In-Line Fuse Holders 131

7 Pre-Engineered Solutions

LCP Fused Selective Coordination Panel 140
LPS Series POWR-Switch (Shunt Trip Disconnect) 142
LPMP Series POWR-Switch Panel 144
Specifier Tool for LCP Coordination Panel 146

8 Protection Relays & Controls

Relay & Control Products Overview 148
Feature Comparisons 150
Ground-Fault Protection 152
Trailing Cable Protection 155
Resistance Grounding & NGR Monitoring 156
Motor Protection 158
Pump & Feeder Protection 160
Arc-Flash Protection & GFCI 161
Generator & Single-Function Protection 162
Generator Control 167
Engine Control & Diagnosis 171
Alarm Monitoring 172
Custom Products 174
Relay & Control Accessories 175

9 Suppression Products

Industrial Varistor Products 177
Surge Suppression Fuses 179

10 International Products

NH Fuse Links 181
Cylindrical Fuses 183

11 Miscellaneous Accessories

Fuse Reducers 185
Box Cover Units 186
Fuse Display & Cabinet 187

12 Technical Application Guide

Fuseology Fundamentals 189
Selection Considerations 191
Time-current Curves & Peak Let-through Charts 195
Selective Coordination 198
UL/CSA Fuse Classes & Applications 200
Electrical Safety Guide 202
Terms & Definitions 204
Motor Protection Tables 211
Alphanumeric Index of Catalog Numbers 214
Condensed Fuse Cross Reference 216

UL FUSE CLASSES AND SELECTION CHART

UL CLASS	LITTELFUSE SERIES	OVERLOAD CHARACTERISTICS	AC RATINGS			DC RATINGS			RECOMMENDED FUSE BLOCKS AND FUSE HOLDERS	FUSE SERIES PAGE NUMBERS
			VOLTAGE (VOLTS)	CURRENT (AMPERES)	INTERRUPTING (AMPERES)	VOLTAGE (VOLTS)	CURRENT (AMPERES)	INTERRUPTING (AMPERES)		
L	KLPC	Time-Delay	600	200 - 6000	200K / 300K*	480	200 - 6000	20,000	–	9
	KLLU			601 - 4000	200,000	–	–	–		10
	LDC			150 - 2000	200,000	600	150 - 2000	50,000		11
RK1	LLNRK	Time-Delay	250	0.1 - 600	200K / 300K*	125	0.1 - 600	20,000	LFR25	14
	LLSRK_ID	Time-Delay	600	0.1 - 600		300	0.1 - 600		LFR60	14
	LLSRK	Time-Delay	600	0.1 - 600		300	0.1 - 600		LFR60	14
	KLNR	Fast-Acting	250	1 - 600	200,000	125	1 - 600		LFR25	15
	KLSR	Fast-Acting	600	1 - 600		250 300	1 - 30 35 - 600		LFR60	15
RK5	FLNR_ID	Time-Delay	250	35 - 600	200K / 300K*	125	35 - 600	20,000	LFR25	18
	FLNR		250	0.1 - 600		125	0.1 - 30			18
	FLSR_ID		600	0.1 - 600		300	0.1 - 600		LFR60	18
	FLSR		600	0.1 - 600		300	0.1 - 600			18
	IDSR		600	0.1 - 600		600	0.1 - 600			17
J	JTD_ID	Time-Delay	600	0.8 - 600	200K / 300K*	300 500	0.8 - 100 110 - 600	20,000	LFJ60 • LFPSJ	23
	JTD	Time-Delay	600	0.8 - 600						23
	JLS	Fast-Acting	600	1 - 600	200,000	–	–	–		24
T	JLLN	Fast-Acting	300	1 - 1200	200,000	125 160 125	1 - 30 35 - 60 110 - 1200	20,000	LFT30 • LSCR002 (700-800A)	26
	JLLS		600	1 - 1200		300	1 - 1200		LFT60 • LSCR002 (700-800A)	26
CC	CCMR	Time-Delay	600	0.2 - 30	200K / 300K*	250 250 300 500	0.2 - 2 4.5 - 10 2.25 - 4 12 - 30	20,000	L60030C • LPSC • LINK00_C • 571 • 572 • LEC • LEY	29
	KLDR	Time-Delay	600	0.1 - 30	200,000	300	0.1 - 30			30
	KLKR	Fast-Acting	600	0.1 - 30	200,000	300	0.1 - 30			30
CD	CCMR	Time-Delay	600	35 - 60	200K / 300K*	250	35 - 60	20,000	LFC60060	29
G	SLC	Time Lag	600 480	0.2 - 20 25 - 60	100,000	–	–	–	LFG480 (1 - 20A) LFG480 (25 - 60A)	28
H	NLKP	Non-Renewable	250	15 - 60	10,000	–	–	–	LFH25	21
	RLN	Renewable	250	1 - 600						22
	RLS	Renewable	600	1 - 600					LFH60	22
Solar	SPF	Solar	–	–	–	1000	1 - 30	20,000	LPHV • LFPHV	60
	SPFJ	Solar	–	–	–	1000	125 - 450	20K (125 - 200A) 10K (250 - 400A) 20K (400A)	LFJ1000	61
K5	NLN	Fast-Acting	250	1 - 600	50,000	250	1 - 600	20K (1 - 60A) 50K (70 - 600A)	LFH25	21
	NLS		600	1 - 600		600 500 400 600 500	1 - 7 8 - 30 35 - 60 70 - 200 225 - 600	20K (1 - 60A) 50K (70 - 600A)	LFH60	21
Semiconductor	L15S	Fast-Acting	150	1 - 1000	200,000	150 100	1 - 60 70 - 1000	20,000	LSCR • 1LS (except L70S)	66
	L25S		250	1 - 800		250 400	1 - 200 225 - 800			66
	L50S		500	10 - 800		450	10 - 800			66
	L60S		600	1 - 800		–	–			66
	L70S		700	10 - 800		650	6 - 800			66
Midget (Supplementary)	BLF	Fast-Acting	250 125	0.5 - 15 20 - 30	10,000	–	–	–	L60030M • LPSM • LINK00_M • 571 • 572 • LEB • LEX	32
	BLN	Fast-Acting	250	1 - 30	10,000	–	–	–		32
	BLS	Fast-Acting	600 250	0.2 - 5 6 - 10	10,000	–	–	–		33
	FLA	Time-Delay	125	0.1 - 30	10,000	–	–	–		33
	FLM	Time-Delay	250	0.1 - 30	10,000	125	0.1 - 30	10,000		32
	FLQ	Time-Delay	500	0.1 - 30	10,000	300	0.1 - 30	10,000		32
	KLK	Fast-Acting	600	0.1 - 30	100K / 200K*	500	0.1 - 30	–		32
	KLKD	Fast-Acting	600	0.1 - 30	100,000	600	0.1 - 30	50,000		32
	KLQ	Time-Delay	600	1 - 6	10,000	–	–	–		33
	FLU	Fast-Acting	1000	0.44 11	10,000 20,000	1000	0.44 11	10,000 20,000	LPHV • LFPHV	33
Plug	SOO, TOO	Time-Delay	125	0.25 - 30	10,000	–	–	–	SAO (SOO & SLO)	63
	SLO, TLO	Medium Time-Delay	125	15 - 30	10,000	–	–	–		
Telecom	L17T	Fast-Acting	–	–	–	170	70 - 1200	100,000	LTFD6001 • LTFD1200	52
	TLN		–	–	–		1 - 600		LFR25	53
	TLS		–	–	–		1 - 125		LTFD • LFT30060 (cartridge)	54

* Series are UL Listed with I.R. of 200,000A and Littelfuse® self-certified with 300,000A I.R.

© 2012 Littelfuse POWR-GARD® Products Catalog

Littelfuse POWR-GARD® – Advanced Protection and Facility Savings

POWR-PRO®

Increase safety with POWR-PRO® Fuses

- Superior current-limitation from $^{1}/_{10}$ – 6000 amperes
- Type 2 "No Damage" coordination with NEMA and IEC motor circuits
- Blown fuse indication (LLSRK_ID and JTD_ID Series)
- Compact motor protection (JTD/JTD_ID, CCMR Series)
- 300,000 AIR to meet trends toward higher SCCR

POWR-PRO® Look for the POWR-PRO® logo for superior protection

UL FUSE CLASS	POWR-PRO®	PAGE NUMBERS
Class L	KLPC & LDC	9, 11
Class RK1	LLNRK/LLSRK_ID	14
Class J	JTD/JTD_ID	23
Class CC / CD	CCMR ($^{2}/_{10}$–60)	29

MRO™ PLUS

Material Reduction Opportunity Program

Increase safety and reduce inventory with MROplus

Your detailed reports will include:

- A streamlined current-limiting fuse inventory recommendation
- A guide to reducing electrical hazards within your facility
- An annual cost savings estimate
- A detailed cross reference

All you need to do is e-mail an Excel file of your fuse inventory to **techline@littelfuse.com** or to your local sales representative. We will do the rest!

Solar Circuit Protection for Today's Evolving Technologies

POWR-GARD® SOLAR RATED PRODUCTS

This catalog incorporates our line of products designed specifically for the growing solar industry. As global standards are constantly changing, Littelfuse continues to develop circuit protection products that meet the requirements of the evolving photovoltaic market.

High-voltage solar products

SPF Series 1000 VDC Solar Fuse 60

SPFJ Series 1000 VDC Solar Fuse..... 61

LFJ Fuse Holder 104

LFPHV Fuse Holder.....112

Other circuit protection products used in solar applications

LDC Series Class L Fuse..... 11

IDSR Class RK5 Fuse 17

KLKD 10 x 38 Midget Fuse 32

Up-LINK™ Fuse Holder..... 107

POWR-Bar Bus Bar System..... 110

SE-601 DC Protection Relay 152

Look for this logo to indicate products that are used in solar applications. Visit our website **www.littelfuse.com/solar** for the latest updates on approvals, certifications, and new products.

A Full Range of Protection Relays & Controls for the Harshest Environments

PROTECTION RELAYS & CONTROLS

Now Offering a Complete Portfolio of Generator Controls, Alarm Panels and Protection Relays

Littelfuse has been protecting electrical systems for 85 years. Our protection relays and controls are used in the world's leading oil-sands operations, offshore platforms, refineries, processing plants and other industrial facilities. Our tested and proven products are only part of the value we provide. What truly sets us apart are our experienced professional engineers who understand the unique requirements and conditions of your application.

For more information on how our deep technical expertise, broad portfolio of products and global resources can help you with your unique application needs, please contact us
www.littelfuse.com/relayscontrols
800-832-3873.

Ground-Fault Protection 148
Trailing Cable Protection 151
Resistance Grounding and NGR Monitoring 152
Motor Protection 154
Feeder and Pump Protection 156
Arc-Flash Protection and GFCI 157
Generator and Single-Function Protection 158
Generator Control 163
Engine Control and Diagnosis 167
Alarm Monitoring 168
Custom Products 170
Accessories 160

Meet NEC® Requirements and Save Time with Littelfuse Pre-Engineered Solutions

LCP Series Coordination Panel

Ideal for circuits that require selective coordination such as emergency lighting circuits or essential electrical systems.

See page 140

LPS Series POWR-Switch

Individual fusible shunt trip disconnect switch easily coordinates with system's overcurrent protection. Typical applications include elevator circuits.

See page 142

LPMP Series POWR-Switch Panel

Fusible panel board with shunt trip capabilities for the control of power to a bank of equipment. Typical applications include elevator circuits.

See page 144

 © 2012 Littelfuse POWR-GARD® Products Catalog

www.littelfuse.com

All the Information You Need in One Convenient Place

Comprehensive Product Literature

- Datasheets, product catalogs, and brochures for the full Littelfuse line
- Comparison chart and cross reference
- Space-savings calculator
- Agency certifications
- Product dimensions
- Application notes and white papers

In-Depth Technical Information

- Detailed specifications
- CAD drawings
- Downloadable 2-D .dxf and 3-D .igs files
- Comparison chart and cross reference
- Line drawings
- Time current and peak let-through curves

Sales, Distribution and Customer Support

- Distributor listings
- Online inventory
- **800-TEC-FUSE** technical support hotline

Look on each catalog page for specific product web links to access additional technical information.

Section Overview

For over 85 years Littelfuse® has been providing fuses to the electrical market. You can continue to count on our manufacturing and supply chain processes to deliver high quality fuses when you need them. At Littelfuse we leverage our global reach to stay on top of the latest applications and standards. Whether your circuit protection needs are focused on OEM, MRO, or construction, we are committed to being your circuit protection partner and appreciate your business.

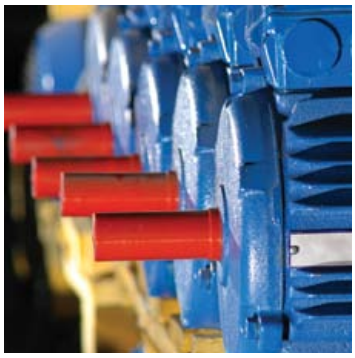

FUSES

Table of Contents

Class L 9

Class RK1 14

Class RK5 17

Class K/H 21

Class J 23

Class T 26

Class G 28

Class CC/CD 29

Midget (10x38mm) 32

KLPC SERIES POWR-PRO® FUSES

POWR-PRO® 600 VAC • Time-Delay • 200-6000 A

Description

KLPC series POWR-PRO® fuses meet or exceed the most stringent project specifications, including silver links, silver-plated copper end bells, glass-reinforced melamine bodies, O-ring seals between body and end bells, and granular quartz fillers.

Applications

- Switchboard mains and feeders
- Motor control center mains
- Large motor branch circuits
- Protection of power circuit breakers

Features/Benefits

- POWR-PRO® Performance
- Best-in-class time-delay withstand
- Current-Limiting
- Easily coordinated with other system components
- 300 kA AC Interrupting Rating (self-certified)

Specifications

Voltage Ratings	AC: 600 V DC: 480 V
Interrupting Ratings	AC: 200 kA rms symmetrical 300 kA rms symmetrical (Littelfuse self-certified) DC: 20,000 A
Ampere Range	200 – 6000 A
Approvals	AC: Standard 248-10, Class L UL Listed 601–6000 A (File No. E81895) UL Recognized 200–600 A (File No. E71611) CSA Certified 200–6000 A (File No. LR29862) Federal Specifications 700–6000 A (QPL-W-F-1814) DC: Littelfuse self-certified

Ordering Information

AMPERE RATINGS					
200	500	800	1350	2000	3000
250	600	900	1400	2100	3500
300	601	1000	1500	2200	4000
350	650	1100	1600	2300	4500
400	700	1200	1800	2400	5000
450	750	1300	1900	2500	6000

SERIES	AMPERAGE	CATALOG NUMBER	ORDERING NUMBER
KLPC	800	KLPC800	KLPC800.X

Web Resources

TC Curves, downloadable CAD drawings and other technical information: **www.littelfuse.com/klpc**

Dimensions

Please refer to Class L dimensions 13

Peak Let-Thru Curve

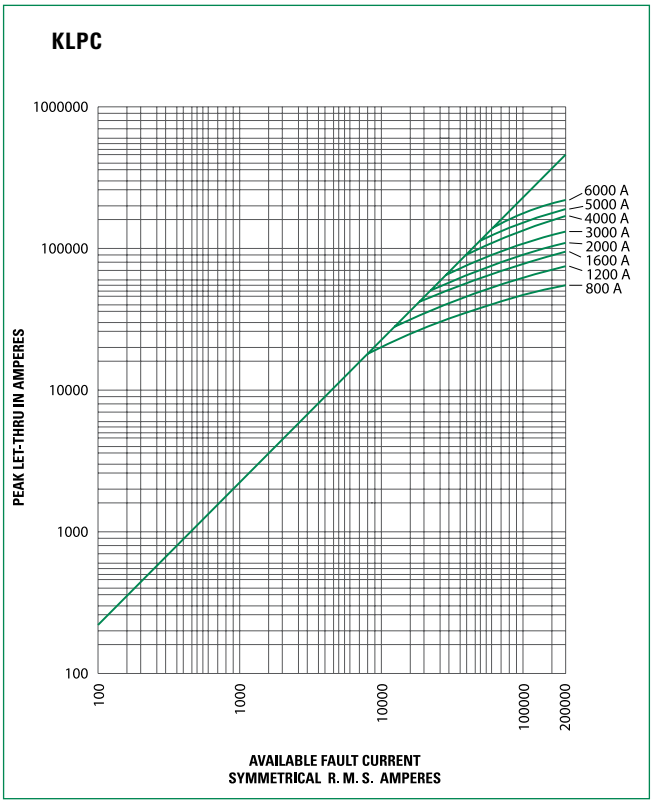

Note: For more information, see Peak Let-Thru Table on pg. 12

KLLU SERIES FUSES

600 VAC • Time-Delay • 601-4000 A

Description

KLLU series fuses meet or exceed UL requirements for UL Class L fuses. The KLLU series offers an economical alternative to KLPC POWR-PRO® fuse with a slightly higher peak let through current.

Applications

- Service switches
- Switchboard mains and feeders
- Motor control center mains
- Large motor branch circuits
- Circuit breaker protection

Features/Benefits

- Current-Limiting
- Easily coordinated with other system components
- 200 kA AC Interrupting Rating

Specifications

Voltage Ratings	AC: 600 V DC: 300 V
Interrupting Ratings	AC: 200 kA DC: 20 kA
Ampere Range	601–4000 A
Approvals	Standard 248-10, Class L UL Listed (File No. E81895) CSA Certified (File No. LR29862) DC: Littelfuse self-certified

Ordering Information

AMPERE RATINGS					
601	750	1000	1400	1800	3000
650	800	1200	1500	2000	3500
700	900	1350	1600	2500	4000

SERIES	AMPERAGE	CATALOG NUMBER	ORDERING NUMBER
KLLU	601	KLLU601	KLLU601.X

Web Resources

TC Curves, downloadable CAD drawings and other technical information: **www.littelfuse.com/kllu**

Dimensions

Please refer to the Class L dimensions 13

Peak Let-Thru Curve

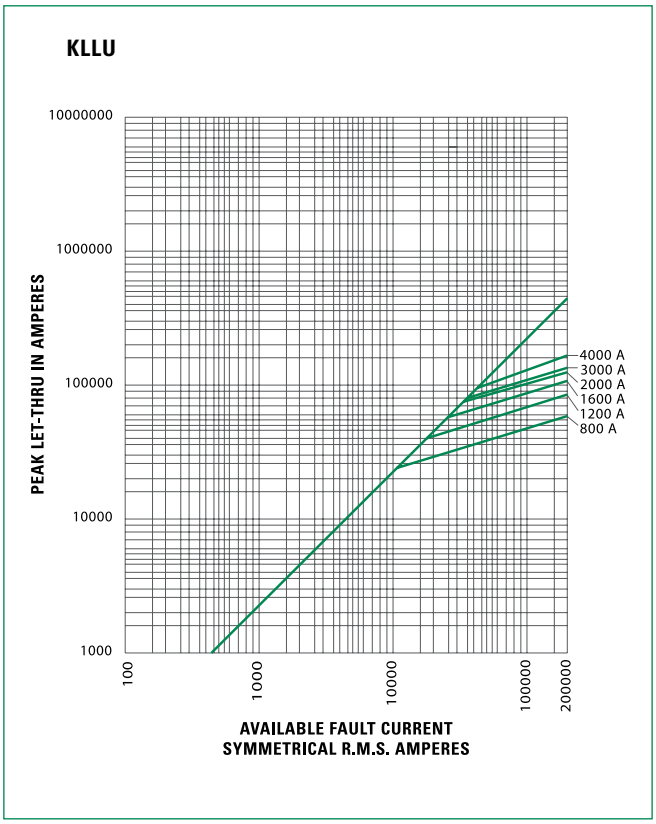

Note: For more information, see Peak Let-Thru Table on pg. 12

© 2012 Littelfuse POWR-GARD® Products Catalog

LDC SERIES POWR-PRO® FUSES

POWR-PRO® 600 V AC/DC • Time-Delay • 150-2000 A

Description

High DC voltage and interrupting ratings make the POWR-PRO® LDC ideal for DC applications. The DC interrupting performance exceeds UL listing requirements.

Applications

- Solar inverter and array protection
- UPS protection especially for large battery circuits
- DC distribution and variable speed drives
- Mass transit systems

Features/Benefits

- POWR-PRO® Performance
- Extremely Current-Limiting
- 600 V AC/DC rated
- 200 kA AC Interrupting Rating
- 50 kA DC Interrupting Rating

Specifications

Voltage Ratings	AC: 600 V DC: 600 V
Interrupting Ratings	AC: 200 kA rms symmetrical DC: 50 kA (16 millisecond time-constant)
Ampere Range	150–2000 A
Approvals	Standard 248-10, Class L UL Listed 601–2000 A (File No. E81895) UL Recognized 150–600 A (File No. E71611) CSA Certified 150–2000 A (File No. LR29862)

Ordering Information

AMPERE RATINGS				
150	450	750	1201	1601
200	500	800	1300	1800
250	600	900	1350	1900
300	601	1000	1400	2000
350	650	1100	1500	
400	700	1200	1600	

SERIES	AMPERAGE	CATALOG NUMBER	ORDERING NUMBER
LDC	700	LDC700	0LDC700.X

Web Resources

TC Curves, downloadable CAD drawings and other technical information: **www.littelfuse.com/ldc**

Dimensions

Please refer to the Class L dimensions 13

Peak Let-Thru Curve

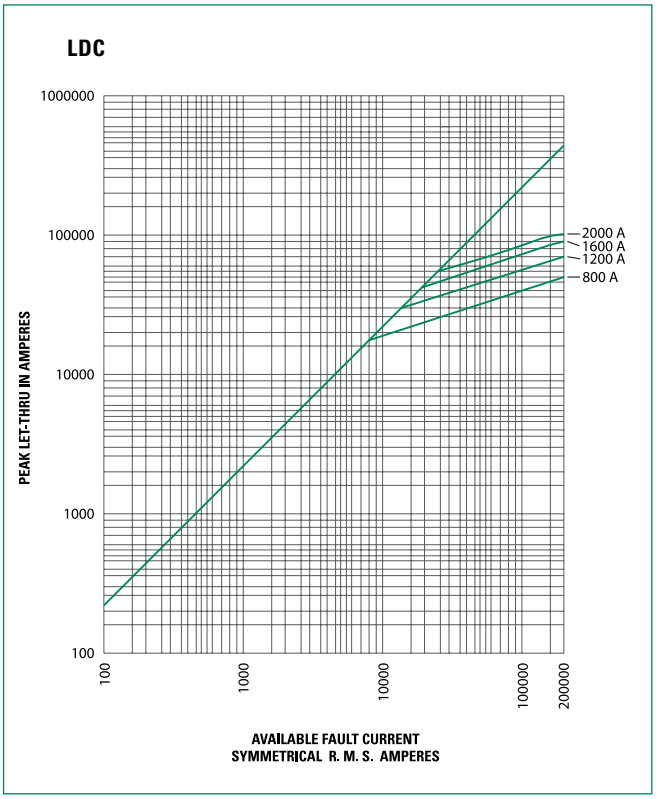

Note: For more information, see Peak Let-Thru Table on pg. 12

CLASS L CURRENT-LIMITING EFFECTS

Current-Limiting Effects of KLPC (600 V) Fuses

SHORT CIRCUIT CURRENT*	APPARENT RMS SYMMETRICAL CURRENT FOR VARIOUS FUSE RATINGS							
	800 A	1200 A	1600 A	2000 A	3000 A	4000 A	5000 A	6000 A
5,000	5,000	5,000	5,000	5,000	5,000	5,000	5,000	5,000
10,000	8,800	10,000	10,000	10,000	10,000	10,000	10,000	10,000
15,000	10,500	13,500	15,000	15,000	15,000	15,000	15,000	15,000
20,000	12,000	15,000	19,000	20,000	20,000	20,000	20,000	20,000
25,000	13,000	16,000	21,000	24,000	25,000	25,000	25,000	25,000
30,000	14,000	18,000	23,000	26,000	30,000	30,000	30,000	30,000
35,000	15,000	19,000	24,000	27,000	32,000	35,000	35,000	35,000
40,000	16,000	20,000	25,000	28,000	34,000	40,000	40,000	40,000
50,000	17,000	22,000	27,000	31,000	37,000	42,500	50,000	50,000
60,000	18,000	24,000	29,000	34,000	40,000	46,000	52,000	60,000
80,000	20,000	26,000	32,000	37,000	44,000	51,000	57,000	70,000
100,000	21,000	27,000	34,000	40,000	46,000	57,000	65,000	75,000
150,000	23,000	31,000	38,000	44,000	54,000	67,000	75,000	87,000
200,000	24,000	34,000	42,000	46,000	57,000	70,000	80,000	95,000

Current-Limiting Effects of KLLU (600 V) Fuses

SHORT-CIRCUIT CURRENT*	APPARENT RMS SYMMETRICAL CURRENT FOR VARIOUS FUSE RATINGS					
	800 A	1200 A	1600 A	2000 A	3000 A	4000 A
5,000	5,000	5,000	5,000	5,000	5,000	5,000
10,000	10,000	10,000	10,000	10,000	10,000	10,000
15,000	11,900	15,000	15,000	15,000	15,000	15,000
20,000	13,000	18,500	20,000	20,000	20,000	20,000
25,000	14,000	20,000	25,000	25,000	25,000	25,000
30,000	14,500	21,000	26,500	30,000	30,000	30,000
35,000	15,000	22,000	28,500	34,000	35,000	35,000
40,000	16,000	23,000	30,000	35,000	37,000	40,000
50,000	17,000	24,000	32,000	38,000	39,000	44,000
60,000	18,000	26,000	34,000	42,000	43,000	50,000
80,000	19,000	28,000	36,000	44,000	46,000	54,500
100,000	21,000	30,000	38,000	46,000	48,000	57,500
150,000	24,000	35,000	44,000	50,000	51,000	68,000
200,000	26,000	38,000	48,000	53,000	60,000	74,000

Current-Limiting Effects of LDC (600 V) Fuses

SHORT CIRCUIT CURRENT*	APPARENT RMS SYMMETRICAL CURRENT FOR VARIOUS FUSE RATINGS			
	800 A	1200 A	1600 A	2000 A
5,000	5,000	5,000	5,000	5,000
10,000	8,500	10,000	10,000	10,000
15,000	9,750	14,000	15,000	15,000
20,000	10,500	15,000	19,000	20,000
25,000	11,500	16,000	21,000	25,000
30,000	12,000	17,000	22,000	26,000
35,000	12,500	18,000	23,000	28,000
40,000	13,500	19,000	24,000	30,000
50,000	14,000	21,000	26,000	32,000
60,000	15,000	22,000	28,000	34,000
80,000	16,000	24,000	30,000	36,000
100,000	18,000	25,000	33,000	40,000
150,000	20,000	30,000	38,000	44,000
200,000	23,000	32,000	41,000	46,000

*Prospective RMS Symmetrical Amperes Short-Circuit Current
Note: Data derived from Peak Let-Thru Curves

© 2012 Littelfuse POWR-GARD® Products Catalog

CLASS L SERIES DIMENSIONS

Dimensions

AMPERES	FIG. NO.	DIMENSIONS INCHES (mm)												
		A	B	C	D	E	F	G	H	J	K	L	M	N
200-800	1	3¾ (95.3)	5¾ (146.1)	6¾ (171.5)	—	—	8⅝ (219.1)	—	—	2 (50.8)	2½ (63.5)	⅜ (9.5)	⅝ x 1⅛ (15.9) x (28.6)	—
900-1200	2	3¾ (95.3)	5¾ (146.1)	6¾ (171.5)	9¼ (235.0)	9½ (241.3)	10¾ (273.1)	—	—	2 (50.8)	2½ (63.5)	⅜ (9.5)	⅝ x ¾ (15.9) x (19.1)	⅝ x 1⅛ (15.9) x (28.6)
1300-1600	2	3¾ (95.3)	5¾ (146.1)	6¾ (171.5)	9¼ (235.0)	9½ (241.3)	10¾ (273.1)	—	—	2⅜ (60.3)	3 (76.2)	7/16 (11.1)	⅝ x ¾ (15.9) x (19.1)	⅝ x 1⅛ (15.9) x (28.6)
1800-2000	2	3¾ (95.3)	5¾ (146.1)	6¾ (171.5)	9¼ (235.0)	9½ (241.3)	10¾ (273.1)	—	—	2¾ (69.9)	3½ (88.9)	½ (12.7)	⅝ x ¾ (15.9) x (19.1)	⅝ x 1⅛ (15.9) x (28.6)
2100-2500	3	4 (101.6)	5¾ (146.1)	6¾ (171.5)	9¼ (235.0)	9½ (241.3)	10¾ (273.1)	1⅝ (41.3)	1¾ (44.5)	3½ (88.9)	5 (127.0)	¾ (19.1)	⅝ x ¾ (15.9) x (19.1)	⅝ x 1⅛ (15.9) x (28.6)
2501-3000	3	4 (101.6)	5¾ (146.1)	6¾ (171.5)	9¼ (235.0)	9½ (241.3)	10¾ (273.1)	1⅝ (41.3)	1¾ (44.5)	4 (101.6)	5 (127.0)	¾ (19.1)	⅝ x ¾ (15.9) x (19.1)	⅝ x 1⅛ (15.9) x (28.6)
3500-4000	4	4 (101.6)	5¾ (146.1)	6¾ (171.5)	9¼ (235.0)	9½ (241.3)	10¾ (273.1)	1¾ (44.5)	3¼ (82.6)	4¾ (120.7)	5¾ (146.1)	¾ (19.1)	⅝ x 1⅜ (15.9) x (34.9)	⅝ x 1⅜ (15.9) x (34.9)
4500-5000	5	4 (101.6)	5¾ (146.1)	—	9¼ (235.0)	—	10¾ (273.1)	1⅝ (41.3)	3¼ (82.6)	5¼ (133.4)	7⅛ (181.0)	1 (25.4)	⅝ DIA. (15.9)	—
6000	5	4 (101.6)	5¾ (146.1)	—	9¼ (235.0)	—	10¾ (273.1)	1⅝ (41.3)	3¼ (82.6)	5¼ (133.4)	7⅛ (181.0)	1 (25.4)	⅝ DIA. (15.9)	—

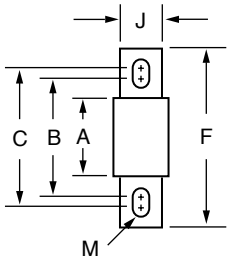

FIG.1

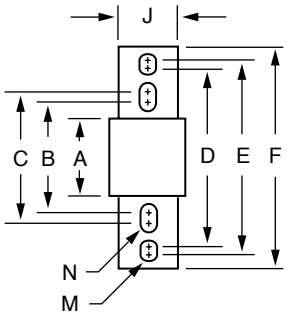

FIG.2

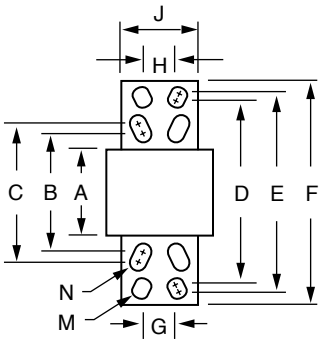

FIG. 3

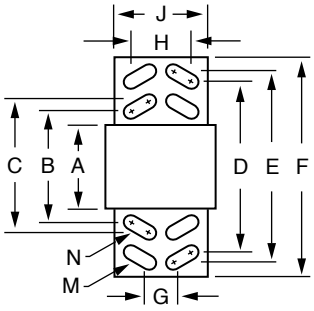

FIG. 4

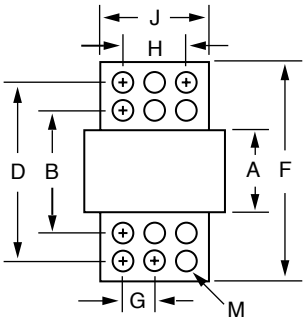

FIG. 5

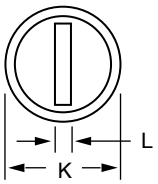

LLNRK/LLSRK/LLSRK_ID SERIES INDICATOR® POWR-PRO® FUSES

POWR-PRO® 250/600 VAC • Dual Element • Time-Delay • 1/10-600 A

Description

RK1 fuses are extremely current-limiting fuses meaning they greatly reduce or eliminate damage to circuits and equipment under short-circuit conditions. Replacing existing Class H, K and RK5 fuses with RK1 fuses is one of the easiest ways to immediately improve the protection of plant workers and equipment.

Applications

- All general purpose circuits
- Motors
- Transformers
- Safety upgrades

Features/Benefits

- POWR-PRO Performance
- Indication available
- Dual-element design
- Extremely Current-Limiting
- IEC Type 2 "No Damage" protection to IEC and NEMA type motor starters
- Indicating and DIN mount fuse holders available

Specifications

Voltage Ratings	600 VAC/300 VDC (LLSRK/LLSRK_ID) 250 VAC/125 VDC (LLNRK)
Interrupting Ratings	AC: 200 kA rms symmetrical 300 kA rms symmetrical (Littelfuse self-certified) DC: 20 kA
Ampere Range	1/10 – 600 A
Approvals	AC: Standard 248-12, Class RK1 UL Listed (File No. E81895) CSA Certified (File No. LR29862) DC: Littelfuse self-certified Federal Specification WF-1814 (QPL- W-F-1814)

Recommended Fuse Holders

LFR60 Series 86
LFR25 Series 86

Ordering Information

AMPERE RATINGS						
1/10	1	2 8/10	6 1/4	25	80	250
15/100	1 1/8	3	7	30	90	300
2/10	1 1/4	3 2/10	8	35	100	350
1/4	1 4/10	3 1/2	9	40	110	400
3/10	1 6/10	4	10	45	125	450
4/10	1 8/10	4 1/2	12	50	150	500
1/2	2	5	15	60	175	600
6/10	2 1/4	5 6/10	17 1/2	70	200	
8/10	2 1/2	6	20	75*	225	

Note: All LLSRK_ID fuses rated 1 amp and above are Indicator® fuses.
**75 A is only ava lable for the 600 V.*

600 V

TYPE	SERIES	AMPERAGE	CATALOG NUMBER	ORDERING NUMBER
INDICATING	LLSRK_ID	60	LLSRK060ID	LSRK060.TXID
NON-INDICATING	LLSRK	60	LLSRK060	LSRK060.T

250 V

TYPE	SERIES	AMPERAGE	CATALOG NUMBER	ORDERING NUMBER
NON-INDICATING	LLNRK	80	LLNRK080	LNRK080.V

Web Resources

TC Curves, downloadable CAD drawings and other technical information: **www.littelfuse.com/llsrk**
www.littelfuse.com/llnrk

Dimensions

Please refer to the Class R dimensions..... 20

Peak Let-Thru Curve (600 V)

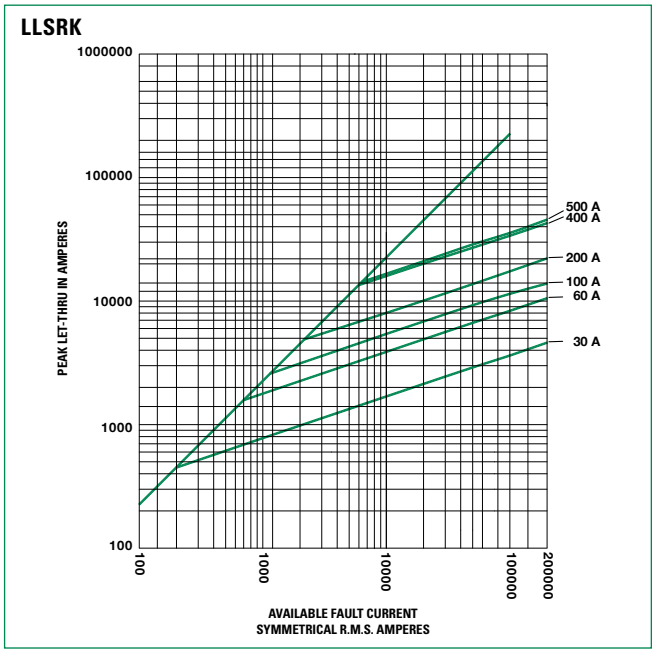

Note: For more information, see Peak Let-Thru Table on pg. 16

© 2012 Littelfuse POWR-GARD® Products Catalog

KLNR/KLSR SERIES FUSES

250/600 VAC • Fast-Acting • 1-600 A

Description

KLSR/KLNR fuses are an economical single element design providing the safety of an RK1 fuse.

Applications

- Resistance heaters
- Lighting circuits
- Non-inductive loads

Features/Benefits

- Extremely Current-Limiting
- Indicating and DIN mount fuse holders available

Specifications

Voltage Ratings	AC: 250 V (KLNR); 600 V (KLSR) DC: 125 V (1 – 600 A KLNR); 250 V (1 – 30 A KLSR); 300 V (35 – 600 A KLSR).
Interrupting Ratings	AC: 200 kA rms symmetrical DC: 20 kA
Ampere Range	1 – 600 A
Approvals	AC: Standard 248-12, Class RK1 UL Listed (File No. E81895) CSA Certified (File No. LR29862) DC: Littelfuse self-certified

Recommended Fuse Holders

LFR60 Series 86
LFR25 Series 86

Dimensions

Please refer to the Class R dimensions..... 20

Ordering Information

AMPERE RATINGS				
1	10	40	100	250
2	12	45	110	300
3	15	50	125	350
4	20	60	150	400
5	25	70	175	450
6	30	80	200	500
8	35	90	225	600

600 V

SERIES	AMPERAGE	CATALOG NUMBER	ORDERING NUMBER
KLSR	90	KLSR090	KLSR090.V

250 V

SERIES	AMPERAGE	CATALOG NUMBER	ORDERING NUMBER
KLNR	90	KLNR090	KLNR090.V

Web Resources

TC Curves, downloadable CAD drawings and other technical information: **www.littelfuse.com/klsr**
www.littelfuse.com/klnr

Peak Let-Thru Curve (600 V)

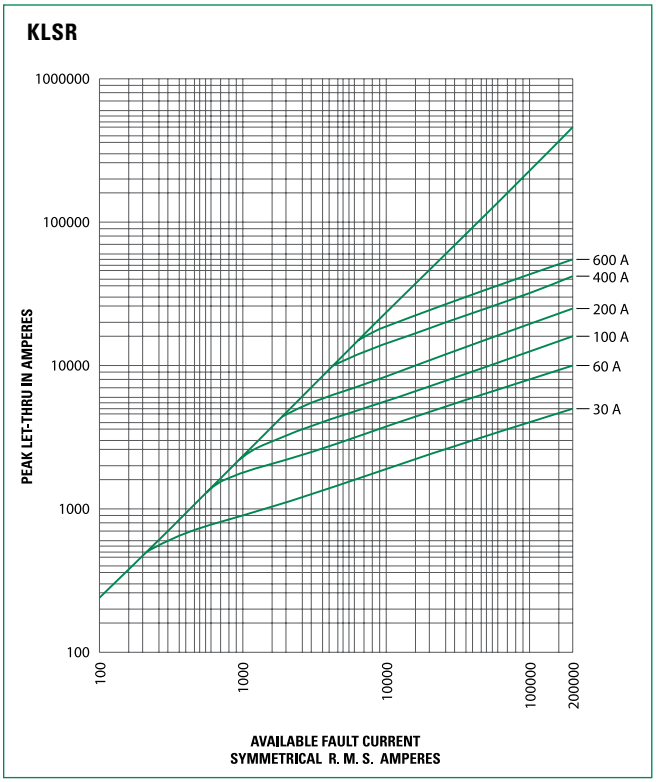

Note: For more information, see Peak Let-Thru Table on pg. 16

CLASS RK1 CURRENT LIMITING EFFECTS

Current-Limiting Effects of LLSRK and LLSRK_ID (600 V) Fuses

SHORT CIRCUIT CURRENT*	APPARENT RMS SYMMETRICAL CURRENT FOR VARIOUS FUSE RATINGS					
	30 A	60 A	100 A	200 A	400 A	600 A
5,000	1,060	1,600	2,100	2,600	4,100	--
10,000	1,350	2,000	2,800	3,400	5,250	8,000
15,000	1,600	2,300	3,200	3,900	6,000	9,000
20,000	1,700	2,600	3,600	4,500	6,700	10,000
25,000	1,900	2,800	3,800	4,800	7,500	11,000
30,000	2,000	3,000	4,100	5,200	8,000	12,000
35,000	2,100	3,100	4,400	5,700	8,500	12,500
40,000	2,200	3,300	4,600	6,000	9,000	13,000
50,000	2,400	3,500	4,900	6,500	9,500	14,000
60,000	2,500	3,800	5,200	7,000	10,000	15,000
80,000	2,700	4,000	5,700	7,750	11,000	17,000
100,000	2,900	4,200	6,200	8,500	12,000	18,000
150,000	3,200	4,600	7,300	10,000	14,000	21,000
200,000	3,300	4,700	8,000	11,000	16,000	23,000

Visit **www.littelfuse.com/llsrk** for 600 V Current-Limiting effects

Current-Limiting Effects of LLNRK (250 V) Fuses

SHORT CIRCUIT CURRENT*	APPARENT RMS SYMMETRICAL CURRENT FOR VARIOUS FUSE RATINGS					
	30 A	60 A	100 A	200 A	400 A	600 A
5,000	900	1,400	2,000	2,700	4,800	5,000
10,000	1,100	1,900	2,700	3,500	6,200	8,500
15,000	1,250	2,100	3,100	4,200	7,000	9,500
20,000	1,400	2,400	3,500	4,600	8,000	10,800
25,000	1,500	2,600	3,900	5,000	8,300	11,500
30,000	1,600	2,800	4,000	5,250	9,000	12,000
35,000	1,700	2,850	4,300	5,500	9,500	12,500
40,000	1,800	3,000	4,600	5,800	9,800	13,500
50,000	1,900	3,200	4,800	6,300	10,200	14,000
60,000	2,000	3,500	5,200	6,700	11,000	15,000
80,000	2,200	3,900	5,700	7,200	12,200	16,000
100,000	2,300	4,000	6,000	8,100	12,700	17,000
150,000	2,500	4,500	6,700	9,100	14,000	19,000
200,000	2,600	4,800	7,000	9,700	15,000	20,000

*Prospective RMS Symmetrical Amperes Short-Circuit Current
Note: Data derived from Peak Let-Thru Curves

Visit **www.littelfuse.com/llnrk** for 250 V Current-Limiting effects

LLSRK_ID Fuses—Quality Construction for performance you can rely on…

Littelfuse **LLSRK_ID** Fuses feature true dual-element construction. This robust design withstands repeated surges within rated time delay without opening needlessly, eliminating downtime caused by power surges or equipment demands.

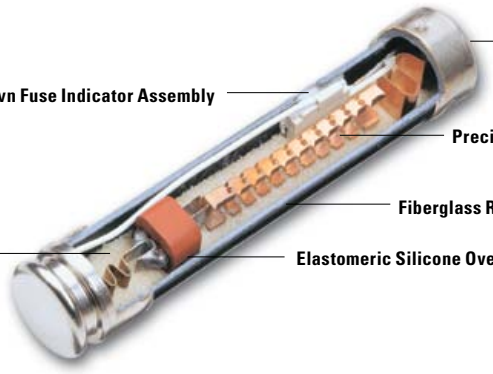

© 2012 Littelfuse POWR-GARD® Products Catalog

IDSR SERIES INDICATOR® POWR-PRO® FUSES

POWR-PRO® 600 V AC/DC • Dual Element • Time-Delay • 1/10-600 A

Description

The IDSR combines a 600 VDC capability with indication to provide an ideal solution for many DC applications.

Applications

- DC circuits
- Solar inverters
- Motors
- Transformers
- Solenoids
- Fluorescent lighting

Features/Benefits

- POWR-PRO® Performance
- Indication

Specifications

Voltage Ratings	AC: 600 V DC: 600 V
Interrupting Ratings	AC: 200 kA rms symmetrical 300 kA rms symmetrical (Littelfuse self-certified) DC: 20 kA
Ampere Range	1/10 – 600 A
Approvals	Standard 248-12 and UL 198M, Class RK5 UL Listed (File No. E81895) CSA Certified (File No. LR29862)

Ordering Information

AMPERE RATINGS							
1/10	6/10	1 8/10	4	8	30	80	225
1/8	8/10	2	4 1/2	9	35	90	250
15/100	1	2 1/4	5	10	40	100	300
2/10	1 1/8	2 1/2	5 6/10	12	45	110	350
1/4	1 1/4	2 8/10	6	15	50	125	400
3/10	1 4/10	3	6 1/4	17 1/2	60	150	450
4/10	1 1/2	3 2/10	7	20	70	175	500
1/2	1 6/10	3 1/2	7 1/2	25	75	200	600

Note: All fuses rated 1A and above are Indicator® fuses.

SERIES	AMPERAGE	CATALOG NUMBER	ORDERING NUMBER
IDSR	30	IDSR30	IDSR030.T

Web Resources

TC Curves, downloadable CAD drawings and other technical information: **www.littelfuse.com/idsr**

Recommended Fuse Holders

LFR60 Series 86

Dimensions

Please refer to the Class R dimensions..... 20

Peak Let-Thru Curve

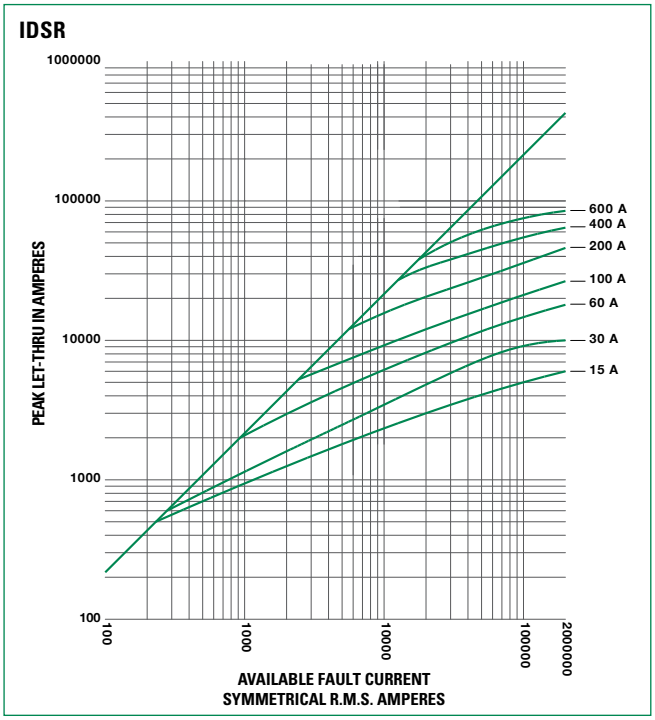

Note: For more information, see Peak Let-Thru Table on pg. 19

FLNR_ID/FLSR_ID SERIES INDICATOR® FUSES

250/600 VAC • Dual Element • Time Delay • 1/10-600 A

Description

Available in both Indicating and Non-Indicating versions, the FLNR/FLSR series of fuses set the standard for general purpose fuses. The dual-element design provides advanced short circuit and overload protection. FLSR series fuses provide excellent protection for all types of circuits especially those containing motors.

Applications

- Service entrance switches
- Switchboard mains and feeders
- Motor control central mains and motor branch circuits
- All general purpose circuits

Features/Benefits

- Indication
- Dual-element design
- Available without indication
- Current limiting

Specifications

Voltage Ratings	AC: 250 V (FLNR_ID); 600 V (FLSR_ID) DC: 125 V (FLNR 1/10 – 30 A); 125 V (FLNR_ID 35 – 600 A); 300 V (FLSR_ID)
Interrupting Ratings	AC: 200 kA rms symmetrical 300 kA rms symmetrical (Littelfuse self-certified) DC: 20 kA
Ampere Range	1/10 – 600 A
Approvals	Standard 248-12, Class RK5 UL Listed (File No. E81895) CSA Certified (File No. LR29862) Federal Specification WF-1814 (QPL- W-F-1814)

Dimensions

Please refer to the Class R dimensions.....20
Refer to the FLNR Series dimensions for FLNR_ID, and the FLSR dimensions for FLSR_ID.

Ordering Information

AMPERE RATINGS							
1/10	6/10	1 8/10	4	8	30	80	225
1/8*	8/10	2	4 1/2	9	35	90	250
15/100	1	2 1/4	5	10	40	100	300
2/10	1 1/8	2 1/2	5 6/10	12	45	110	350
1/4	1 1/4	2 8/10	6	15	50	125	400
3/10†	1 4/10	3	6 1/4	17 1/2	60	150	450
4/10	1 1/2	3 2/10	7	20	70	175	500
1/2	1 6/10	3 1/2	7 1/2	25	75**	200	600

*FLNR only. †FLNR, FLSR, FLSR_ID only. **FLNR, FLSR, FLSR_ID only
Note: For 1/10 – 30A 250 volt fuses, order non-indicating FLNR series fuses.

TYPE	VOLTAGE	SERIES	AMP	CATALOG NUMBER	ORDERING NUMBER
NON-INDICATING	600 V	FLSR	15	FLSR015	FLSR015.T
INDICATING	600 V	FLSR_ID	15	FLSR015ID	FLSR015.TXID
NON-INDICATING	250 V	FLNR	60	FLNR060	FLNR060.T
INDICATING	250 V	FLNR_ID	60	FLNR060ID	FLNR060.TXID

Web Resources

TC Curves, downloadable CAD drawings and other technical information: **www.littelfuse.com/flsr**
www.littelfuse.com/flnr

Recommended Fuse Holders

LFR60 Series 86
LFR25 Series 86

Peak Let-Thru Curve (600 V)

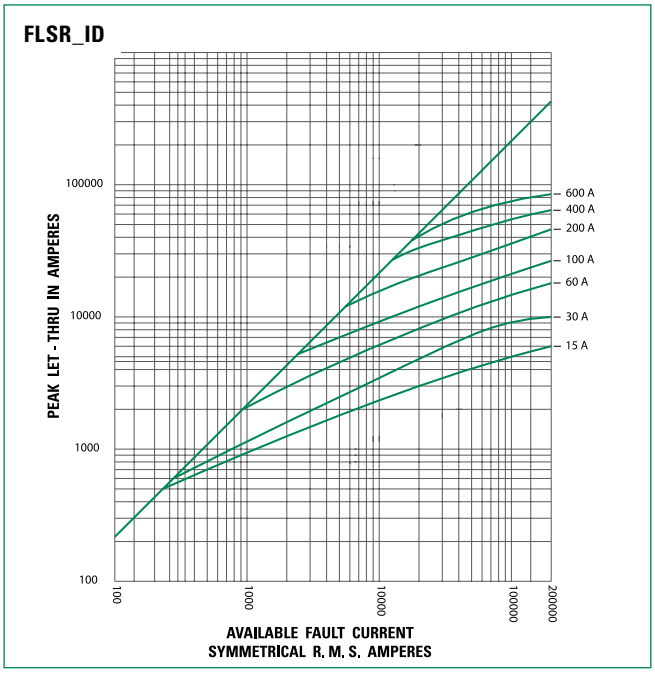

Note: For more information, see Peak Let-Thru Table on pg. 19

© 2012 Littelfuse POWR-GARD® Products Catalog

CLASS RK5 CURRENT-LIMITING EFFECTS

Current-Limiting Effects of IDSR (600 V) Fuses

SHORT CIRCUIT CURRENT*	APPARENT RMS SYMMETRICAL CURRENT FOR VARIOUS FUSE RATINGS						
	15 A	30 A	60 A	100 A	200 A	400 A	600 A
5,000	800	1,100	2,100	3,200	5,000	5,000	5,000
10,000	1,100	1,600	2,900	4,300	7,300	10,000	10,000
15,000	1,300	1,900	3,400	5,000	8,600	13,700	15,000
20,000	1,400	2,200	3,800	5,600	9,500	15,500	19,000
25,000	1,500	2,500	4,100	6,100	10,300	16,700	21,500
30,000	1,600	2,700	4,500	6,500	11,000	17,700	23,500
35,000	1,700	2,900	4,700	6,800	11,600	18,600	25,200
40,000	1,800	3,100	5,000	7,200	12,100	19,400	26,600
50,000	1,900	3,400	5,400	7,800	13,100	20,800	29,500
60,000	2,000	3,600	5,800	8,300	13,900	22,000	30,600
80,000	2,200	4,000	6,300	9,100	15,400	24,000	33,200
100,000	2,300	4,200	6,800	9,800	16,700	25,500	35,100
150,000	2,600	4,500	7,700	11,200	19,300	28,100	38,000
200,000	2,800	4,600	8,400	12,400	21,400	30,000	39,600

Current-Limiting Effects of FLSR and FLSR_ID (600 V) Fuses

SHORT-CIRCUIT CURRENT*	APPARENT RMS SYMMETRICAL CURRENT FOR VARIOUS FUSE RATINGS					
	30 A	60 A	100 A	200 A	400 A	600 A
5,000	1,250	2,100	3,200	5,000	5,000	5,000
10,000	1,600	2,850	4,300	7,250	10,000	10,000
15,000	1,800	3,400	5,000	8,500	13,500	15,000
20,000	2,250	3,800	5,500	9,500	15,750	19,000
25,000	2,450	4,100	5,700	10,250	17,000	21,000
30,000	2,700	4,500	6,400	10,750	18,000	23,000
35,000	2,900	4,800	6,700	11,500	19,000	24,250
40,000	3,000	5,000	7,250	12,000	19,500	27,000
50,000	3,400	5,250	7,750	13,000	21,000	29,000
60,000	3,600	5,750	8,100	14,000	22,000	30,500
80,000	3,900	6,250	9,000	15,000	24,000	33,000
100,000	4,300	6,750	9,750	16,500	26,000	35,000
150,000	4,500	7,600	11,100	19,000	28,000	38,000
200,000	4,600	8,400	12,250	21,500	30,000	40,000

Current-Limiting Effects of FLNR and FLNR_ID (250V) Fuses

SHORT-CIRCUIT CURRENT*	APPARENT RMS SYMMETRICAL CURRENT FOR VARIOUS FUSE RATINGS					
	30 A	60 A	100 A	200 A	400 A	600 A
5,000	1,400	2,100	3,100	5,000	5,000	5,000
10,000	1,550	2,500	3,900	6,500	9,500	10,000
15,000	2,000	3,150	4,400	7,250	10,500	14,000
20,000	2,250	3,400	5,000	8,250	12,000	16,000
25,000	2,400	3,750	5,250	9,000	12,500	16,500
30,000	2,550	4,100	5,600	9,500	13,500	18,000
35,000	2,650	4,300	5,800	9,750	14,000	19,000
40,000	2,800	4,400	6,250	10,250	15,000	20,000
50,000	3,000	5,000	6,500	10,500	16,000	21,000
60,000	3,200	5,250	7,000	11,500	17,000	23,000
80,000	3,400	5,750	7,500	12,500	19,000	25,500
100,000	3,850	6,000	8,000	13,500	21,000	27,500
150,000	4,100	7,000	9,000	15,200	24,000	31,500
200,000	4,300	7,500	9,750	16,500	26,000	34,000

*Prospective RMS Symmetrical Amperes Short-Circuit Current
Note: Data Derived from Peak Let-Thru Curves

CLASS R SERIES DIMENSIONS

Dimensions

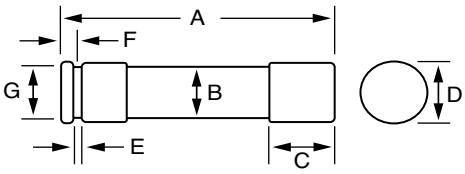

FIG. 1

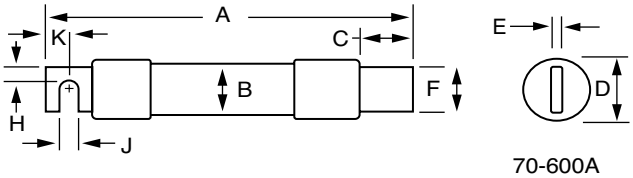

FIG. 2

70-600A

AMPS	FIGURE NUMBER	SERIES	DIMENSIONS INCHES (mm)									
			A	B	C	D	E	F	G	H	J	K
1/10–30	1	LLNRK/KLNR/ FLNR	2 (50.8)	½ (12.7)	½ (12.7)	9/16 (14.3)	5/64 (2.0)	5/32 (4.0)	3/8 (9.5)	—	—	—
		LLSRK/KLSR/ FLSR/IDSR	5 (127.0)	¾ (19.1)	5/8 (15.9)	13/16 (20.6)	3/32 (2.4)	3/16 (4.8)	5/8 (15.9)	—	—	—
35–60	1	LLNRK/KLNR/ FLNR	3 (76.2)	¾ (19.1)	5/8 (15.9)	13/16 (20.6)	3/32 (2.4)	3/16 (4.8)	5/8 (15.9)	—	—	—
		LLSRK/KLSR/ FLSR/IDSR	5½ (139.7)	1 (25.4)	5/8 (15.9)	1 1/16 (27.0)	3/32 (2.4)	¼ (6.4)	7/8 (22.2)	—	—	—
70–100	2	LLNRK/KLNR/ FLNR	5 7/8 (149.2)	1 (25.4)	1 1/16 (27.0)	1 1/16 (27.0)	1/8 (3.2)	¾ (19.1)	—	¼ (6.4)	9/32 (7.1)	½ (12.7)
		LLSRK/KLSR/ FLSR/IDSR	7 7/8 (200.0)	1¼ (31.8)	1 1/16 (27.0)	1 5/16 (33.3)	1/8 (3.2)	¾ (19.1)	—	¼ (6.4)	9/32 (7.1)	½ (12.7)
110–200	2	LLNRK/KLNR/ FLNR	7 1/8 (181.0)	1½ (38.1)	1 15/32 (37.3)	1 19/32 (40.5)	3/16 (4.8)	1 1/8 (28.6)	—	7/16 (11.1)	9/32 (7.1)	11/16 (17.5)
		LLSRK/KLSR/ FLSR/IDSR	9 5/8 (244.5)	1¾ (44.5)	1 15/32 (37.3)	1 27/32 (46.8)	3/16 (4.8)	1 1/8 (28.6)	—	7/16 (11.1)	9/32 (7.1)	11/16 (17.5)
225–400	2	LLNRK/KLNR/ FLNR	8 5/8 (219.1)	2 (50.8)	1 15/16 (49.2)	2 3/32 (53.2)	¼ (6.4)	1 5/8 (41.3)	—	5/8 (15.9)	13/32 (10.3)	15/16 (23.8)
		LLSRK/KLSR/ FLSR/IDSR	11 5/8 (295.3)	2½ (63.5)	2 (50.8)	2 19/32 (65.9)	¼ (6.4)	1 5/8 (41.3)	—	5/8 (15.9)	13/32 (10.3)	15/16 (23.8)
450–600	2	LLNRK/KLNR/ FLNR	10 3/8 (263.5)	2½ (63.5)	2 3/8 (60.3)	2 19/32 (65.9)	¼ (6.4)	2 (50.8)	—	¾ (19.1)	17/32 (13.5)	1 1/8 (28.6)
		LLSRK/KLSR/ FLSR/IDSR	13 3/8 (339.7)	3 (76.2)	2 13/32 (61.1)	3 3/32 (78.6)	¼ (6.4)	2 (50.8)	—	¾ (19.1)	17/32 (13.5)	1 1/8 (28.6)

© 2012 Littelfuse POWR-GARD® Products Catalog

Littelfuse®
Expertise Applied | Answers Delivered

NLN/NLS SERIES (ONE-TIME) FUSES

250/600 VAC • "One-Time" • 1-600 A

Description

NLN/NLS fuses provide low cost protection for general purpose feeder and branch circuits when available short circuit currents are less than 50 kA.

Canadian Electrical Code NLKP Type P fuse available. See Web Resources links for more information.

Applications

- General purpose residential and commercial circuits with little or no motor load.

Features/Benefits

- Economical
- 50 kA interrupting rating
- Indicating and DIN mount holders available

Specifications

Voltage Ratings	AC: 250 V (NLN) 600 V (NLS) DC: 250 V (NLN) 400 V (NLS 35 – 60 A) 500 V (NLS 8 – 30 A) (NLS 225 – 600 A) 600 V (NLS 1 – 7 A) (NLS 70 – 200 A)
Interrupting Ratings	AC: 50 kA rms symmetrical (NLN/NLS) DC: 20 kA (NLN/NLS 1 – 60 A) 50 kA (NLN/NLS 70 – 600 A)
Ampere Range	1 – 600 A (NLN/NLS)
Approvals	NLN/NLS: Standard 248-9, Class K5 UL Listed (File No. E81895) CSA Certified (File No. LR29862)

Ordering Information

AMPERE RATINGS					
1	7	*25	*60	125	300
2	8	*30	70	150	350
3	10	*35	80	175	400
4	12	*40	90	200	450
5	*15	*45	100	225	500
6	*20	*50	110	250	600

*NLKP series available only in those amperages preceded by an asterisk.

SERIES	AMPERAGE	CATALOG NUMBER	ORDERING NUMBER
NLS	20	NLS020	0NLS020.T
NLN	15	NLN015	0NLN015.T

Web Resources

TC Curves, downloadable CAD drawings and other technical information: **www.littelfuse.com/nln**
www.littelfuse.com/nls
www.littelfuse.com/nlkp

Recommended Fuse Holders

LFH60 Series 86
LFH25 Series 86

Dimensions

Please refer to the Class K/H dimensions 22

RLN/RLS SERIES RENEWABLE FUSES AND LKN/LKS LINKS

250/600 VAC • Renewable • 1-600 A

Description

Littelfuse RLN and RLS series renewable fuses have traditionally been used to provide low cost protection. However, generally increased levels of available fault current and the distinct possibility that renewable fuses may be improperly renewed, have rendered them unsafe. The use of these fuses in new applications is prohibited by law.

Specifications

Voltage Ratings	AC: 250 V (RLN); 600 V (RLS)
Interrupting Ratings	AC: 10 kA rms symmetrical
Ampere Range	1–600 A
Approvals	Standard 248-6, Class H UL Listed (File No. E81895) CSA Certified (File No. LR29862)
Fuse Links	To order, specify LKN (250V) or LKS (600V) plus ampere rating.

Guide For Proper Renewable Fuse Usage

Renewable fuses should only be used where short-circuit currents are known to be less than 10,000 amperes, and where correct replacement of open links is assured. Renewable fuses and links are not recommended for new applications.

Still Using Class H Fuses?

Littelfuse offers several fuse and fuse block combinations that can greatly improve electrical safety.

LLNRK/LLSRK..... 14
FLNR/FLSR fuses 18
LFR fuse holders 86

Ordering Information

AMPERE RATINGS						
1	6	20	45	90	175	350†
2	8*	25	50	100	200	400†
3	10	30	60	110	225†	450†
4	12*	35	70	125	250†	500†
5	15	40	80	150	300†	600†

*RLS only.
†These ampere ratings require two links per fuse.

TYPE	VOLTAGE	CATALOG NUMBER	ORDERING NUMBER
FUSE	600	RLS020	0RLS020.T
FUSE	250	RLN020	0RLN020.T
LINK	600	LKS025	0LKS025.S
LINK	250	LKN030	0LKN030.S

Class K/H Dimensions

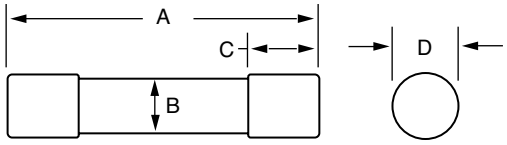

FIG. 1

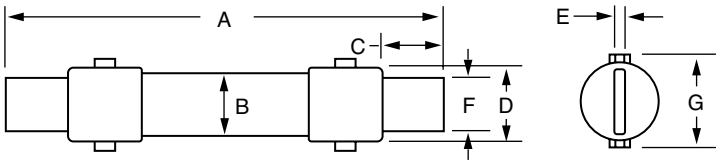

FIG. 2

AMPERES	REFER TO FIG. NO.	SERIES	DIMENSIONS INCHES (mm)						
			A	B	C	D	E	F	G
1 – 30	1	NLN/RLN	2 (50.8)	½ (12.7)	½ (12.7)	9/16 (14.3)	—	—	—
		NLS/RLS	5 (127.0)	¾ (19.1)	⅝ (15.9)	13/16 (20.6)	—	—	—
35 – 60	1	NLN/RLN	3 (76.2)	¾ (19.1)	⅝ (15.9)	13/16 (20.6)	—	—	—
		NLS/RLS	5½ (139.7)	1 (25.4)	⅝ (15.9)	1 1/16 (27.0)	—	—	—
70 – 100	2	NLN/RLN	5⅞ (149.2)	1 (25.4)	1 (25.4)	1 1/16 (27.0)	⅛ (3.2)	¾ (19.1)	1 5/16 (33.3)
		NLS/RLS	7⅞ (200.0)	1¼ (31.8)	1 (25.4)	1 5/16 (33.3)	⅛ (3.2)	¾ (19.1)	1 9/16 (39.7)
110 – 200	2	NLN/RLN	7⅛ (181.0)	1½ (38.1)	1⅜ (34.9)	1 9/16 (39.7)	3/16 (4.8)	1⅛ (28.6)	1⅞ (47.6)
		NLS/RLS	9⅝ (244.5)	1¾ (44.5)	1⅜ (34.9)	1 27/32 (46.8)	3/16 (4.8)	1⅛ (28.6)	2 3/32 (53.2)
225 – 400	2	NLN/RLN	8⅝ (219.1)	2 (50.8)	1⅞ (47.6)	2 3/32 (53.2)	¼ (6.4)	1⅝ (41.3)	2 13/32 (61.1)
		NLS/RLS	11⅝ (295.3)	2½ (63.5)	1⅞ (47.6)	2 19/32 (65.9)	¼ (6.4)	1⅝ (41.3)	2⅞ (73.0)
450 – 600	2	NLN/RLN	10⅜ (263.5)	2½ (63.5)	2¼ (57.2)	2 19/32 (65.9)	¼ (6.4)	2 (50.8)	2⅞ (73.0)
		NLS/RLS	13⅜ (339.7)	3 (76.2)	2¼ (57.2)	3 3/32 (78.6)	¼ (6.4)	2 (50.8)	3 7/16 (87.3)

© 2012 Littelfuse POWR-GARD® Products Catalog

JTD_ID SERIES INDICATOR® POWR-PRO® FUSES

POWR-PRO® 600 VAC • Time Delay • 8/10-600 A

Description

The Littelfuse POWR-PRO® JTD_ID Indicator Class J fuse provides visual blown fuse indication and maximum protection in a compact package. The current-limiting time delay JTD_ID offers a patented design which reduces nuisance fuse openings.

Applications

- Fused combination motor controllers and motor control centers
- Transformer protection
- Protection for series rated molded case circuit-breaker panels
- General purpose circuits

Features

- Current-Limiting
- IEC Type 2 Protection
- Indication and non-indication version available
- POWR-PRO® Performance
- Indicating and DIN mount holders available

Specifications

Voltage Ratings	AC: 600 V DC: 300 V (8/10–100 A); 500 V (110–600 A)
Interrupting Rating	AC: 200 kA rms symmetrical 300 kA rms symmetrical DC: 20 kA
Ampere Range	8/10–600 A
Approvals	AC: Standard 248-8, Class J UL Listed (File No. E81895) CSA Certified (File No. LR29862) DC: Littelfuse self-certified

Ordering Information

AMPERE RATINGS							
8/10	2¼	4½	10	35	90	225	600
1	2½	5	12	40	100	250	
1¼	2 8/10	5 6/10	15	45	110	300	
1½	3	6	17½	50	125	350	
1 6/10	3 2/10	7	20	60	150	400	
1 8/10	3½	8	25	70	175	450	
2	4	9	30	80	200	500	

TYPE	SERIES	AMPERAGE	CATALOG NUMBER	ORDERING NUMBER
INDICATING	JTD_ID	60	JTD60ID	0JTD060.TXID
NON-INDICATING	JTD	60	JTD60	0JTD060.T

Web Resources

Time-current curves, data sheets and additional technical information: **www.littelfuse.com/jtd**

Recommended Fuse Holders

LFJ60 Series 83
LFPSJ Series (8/10–60 A) 113

Dimensions

Please refer to the Class J dimensions 25

Peak Let-Thru Curve

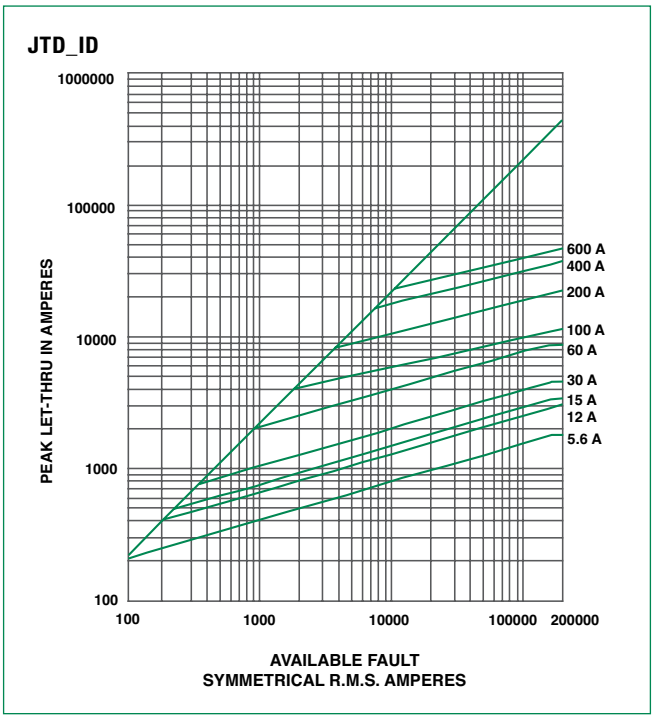

Note: For more information, see Peak Let-Thru Table on pg. 25

JLS SERIES FUSES

600 VAC • Fast-Acting • 1-600 A

Description

JLS series fuses provide space saving, fast-acting overload and short-circuit protection for non-inductive loads. For applications where short-duration surges and spikes may cause nuisance fuse opening, consider the use of Littelfuse POWR-PRO® JTD or JTD_ID series time-delay fuses.

Applications

- General purpose circuits with little or no motor load.
- Resistive loads, such as resistance electric heat.
- Loads requiring fast-acting overload protection, such as equipment containing solid-state devices.

Specifications

Voltage Ratings	600 VAC
Interrupting Ratings	200 kA rms symmetrical
Ampere Range	1–600 A
Approvals	Standard 248-8, Class J UL Listed (File No. E81895) CSA Certified (File No. LR29862) Federal Specification WF-1814 (QPL-W-F-1814)

Dimensions

Please refer to the Class J dimensions 25

Ordering Information

AMPERE RATINGS					
1	20	45	90	175	350
3	25	50	100	200	400
6	30	60	110	225	450
10	35	70	125	250	500
15	40	80	150	300	600

TYPE	SERIES	AMPERAGE	CATALOG NUMBER	ORDERING NUMBER
NON-INDICATING	JLS	110	JLS110	0JLS110.X

Web Resources

TC curves, downloadable CAD drawings and other technical information: **www.littelfuse.com/jls**

Recommended Fuse Holders

LFJ60 Series 83
LFPSJ Series (8/10–60 A)..... 113

Peak Let-Thru Curve

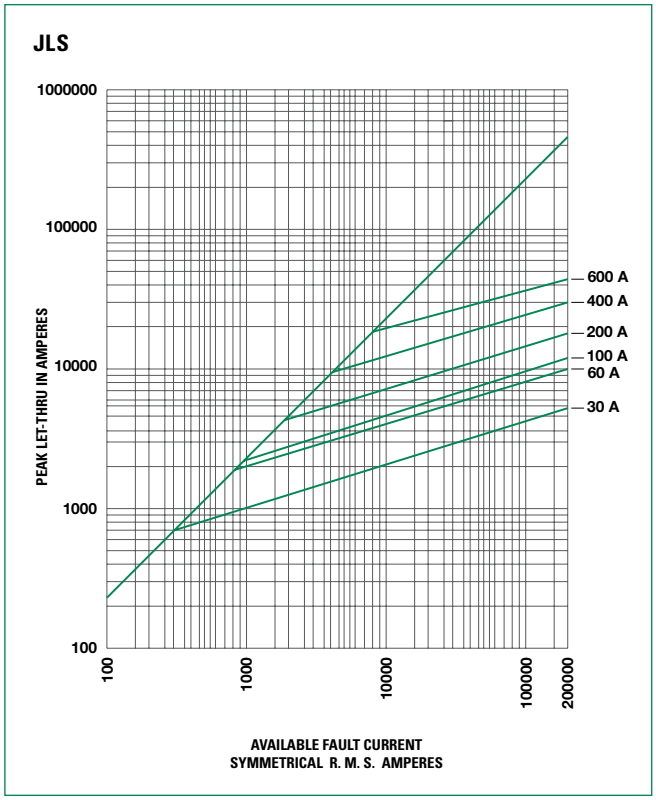

© 2012 Littelfuse POWR-GARD® Products Catalog

CLASS J DIMENSIONS AND CURRENT-LIMITING EFFECTS

Dimensions Inches (mm)

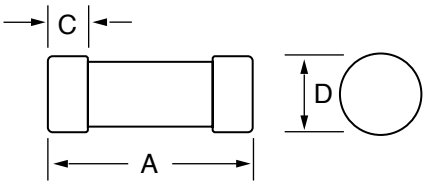

Fig. 1

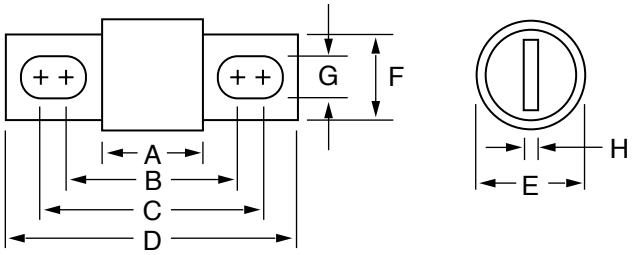

Fig. 2

Dimensions of JTD_ID, JTD and JLS

AMPERES	REFER TO FIG. NO.	DIMENSIONS INCHES (mm)							
		A	B	C	D	E	F	G	H
1 – 30	1	2¼ (57.2)	—	½ (12.7)	13/16 (20.6)	—	—	—	—
35 – 60	1	2⅜ (60.3)	—	⅝ (15.9)	1 1/16 (27.0)	—	—	—	—
70 – 100	2	2⅝ (66.7)	3 17/32 (89.7)	3 23/32 (94.5)	4⅝ (117.5)	1⅛ (28.6)*	¾ (19.1)	9/32 (7.1)	⅛ (3.2)
110 – 200	2	3 (76.2)	4 9/32 (108.7)	4 15/32 (113.5)	5¾ (146.1)	1½ (38.1)	1⅛ (28.6)	9/32 (7.1)	3/16 (4.8)
225 – 400	2	3⅜ (85.7)	5⅛ (130.2)	5⅜ (136.5)	7⅛ (181.0)	2 (50.8)	1⅝ (41.3)	13/32 (10.3)	¼ (6.4)
450 – 600	2	3¾ (95.3)	5 27/32 (148.4)	6 5/32 (156.4)	8 (203.2)	2½ (63.5)	2 (50.8)	17/32 (13.5)	⅜ (9.5)

*70-100 A JLS dimension = 1 (25.4)

Current-Limiting Effects of JTD_ID (600 V) Fuses

SHORT CIRCUIT CURRENT†	APPARENT RMS SYMMETRICAL CURRENT FOR VARIOUS FUSE RATINGS						
	15 A	30 A	60 A	100 A	200 A	400 A	600 A
5,000	565	750	1,500	1,800	2,800	4,800	5,000
10,000	675	925	1,900	2,450	3,600	5,700	7,750
15,000	775	1,050	2,100	2,800	4,100	6,500	9,000
20,000	825	1,125	2,300	3,000	4,400	7,250	9,700
25,000	900	1,200	2,500	3,300	5,000	8,000	10,500
30,000	950	1,300	2,600	3,500	5,100	8,400	11,000
35,000	1,000	1,350	2,700	3,700	5,400	9,000	12,000
40,000	1,050	1,400	2,800	3,900	5,600	9,200	12,500
50,000	1,100	1,500	3,000	4,200	6,000	10,000	13,000
60,000	1,200	1,600	3,200	4,500	6,400	10,500	14,000
80,000	1,300	1,700	3,400	4,900	7,200	11,200	15,500
100,000	1,375	1,800	3,600	5,200	7,800	12,200	16,500
150,000	1,500	2,000	3,950	6,000	9,000	14,500	19,000
200,000	1,600	2,175	4,000	6,500	10,000	16,000	20,500

†Prospective RMS Symmetrical Amperes Short-Circuit Current
Note: Data derived from Peak Let-Thru Curves

JLLN/JLLS CLASS T FUSES

300/600 VAC • Fast-Acting • 1-1200 A

Description

JLLN/JLLS fuses are less than 1/3 the size of comparable Class R fuses and are typically used for short circuit protection of drives and surge sensitive components. When rated in accordance with the NEC®, JLLN/JLLS fuses provide fast-acting overload and short circuit protection for non-inductive circuits and equipment.

Applications

- Variable speed drive protection
- Compact mains switches

Features/Benefits

- Extremely current-limiting
- Compact design
- 200 kA Interrupting Rating

Specifications

Voltage Ratings AC: 300 V (JLLN); 600 V (JLLS)
DC: 160 V (JLLN 1 – 30 A)
160 V (JLLN 35 – 60 A)
125 V (JLLN 70 – 100 A)
125 V (JLLN 110 – 1200 A)
300 V (JLLS)

Interrupting Ratings AC: 200 kA rms symmetrical
DC: 20 kA
(JLLN 70 – 1200 A)
(JLLS 1 – 1200 A)

Ampere Range 1 – 1200 A

Approvals AC: Standard 248-15, Class T
UL Listed (File No. E81895):
JLLN (1 – 1200 A)
JLLS (1 – 800 A)
UL Recognized (File No. E71611)
JLLS (900 – 1200 A)
CSA Certified (File No. LR29862)
JLLN/JLLS (1 – 600 A)
DC: UL Listed (File No. E81895):
JLLN (35 – 1200 A)
Littelfuse self-certified: JLLN (1 – 30 A)
JLLS (1 – 1200 A)

Environmental RoHS Compliant

Ordering Information

AMPERE RATINGS				
1	30	90	250	800
2	35	100	300	900*
3	40	110	350	1000
6	45	125	400	1100
10	50	150	450	1200
15	60	175	500	
20	70	200	600	
25	80	225	700	

*JLLS only
Note: Contact the factory for RoHS compliant Class T fuses.

SERIES	VOLTAGE	AMPERAGE	CATALOG NUMBER	ORDERING NUMBER
JLLS	600 V	6	JLLS006	JLLS006.T
JLLN	300 V	10	JLLN010	JLLN010.T

Web Resources

TC Curves, downloadable CAD drawings and other technical information: **www.littelfuse.com/jlln**
www.littelfuse.com/jlls

Recommended Fuse Holders

LFT30 Series..... 92
LFT60 Series..... 92
LSCR Series for 700-800 A..... 120

Dimensions

Please refer to the Class T dimensions..... 27

Peak Let-Thru Curve

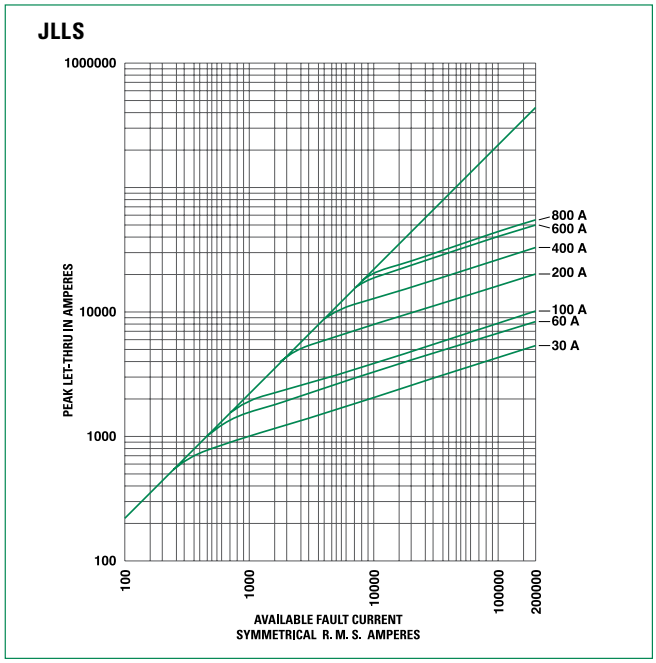

Note: For more information, see Peak Let-Thru Table on pg. 27

© 2012 Littelfuse POWR-GARD® Products Catalog

CLASS T DIMENSIONS AND CURRENT-LIMITING EFFECTS

Dimensions Inches (mm)

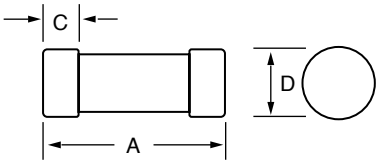

Fig. 1

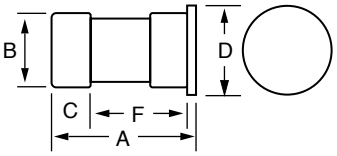

Fig. 2

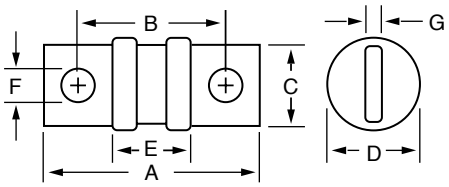

Fig. 3

AMPERES	REFER TO FIG. NO.	SERIES	DIMENSIONS INCHES (mm)						
			A	B	C	D	E	F	G
1 – 30	1	JLLN	7/8 (22.2)	—	9/32 (7.1)	13/32 (10.3)	—	—	—
		JLLS	1 1/2 (38.1)	—	9/32 (7.1)	9/16 (14.3)	—	—	—
35 – 60	1	JLLN	7/8 (22.2)	—	9/32 (7.1)	9/16 (14.3)	—	—	—
	2	JLLS	1 9/16 (39.7)	13/16 (20.6)	13/32 (10.3)	1 (25.4)	1/16 (1.6)	1 3/32 (27.8)	—
70 – 100	3	JLLN	2 5/32 (54.8)	1 9/16 (39.7)	3/4 (19.1)	13/16 (20.6)	27/32 (21.4)	9/32 (7.1)	1/8 (3.2)
		JLLS	2 61/64 (75.0)	2 23/64 (59.9)	3/4 (19.1)	13/16 (20.6)	1 41/64 (41.7)	9/32 (7.1)	1/8 (3.2)
110 – 200	3	JLLN	2 7/16 (61.9)	1 11/16 (42.9)	7/8 (22.2)	1 1/16 (27.0)	27/32 (21.4)	11/32 (8.7)	3/16 (4.8)
		JLLS	3 1/4 (82.6)	2 1/2 (63.5)	7/8 (22.2)	1 1/16 (27.0)	1 21/32 (42.1)	11/32 (8.7)	3/16 (4.8)
225 – 400	3	JLLN	2 3/4 (69.9)	1 27/32 (46.8)	1 (25.4)	1 5/16 (33.3)	53/64 (21.0)	13/32 (10.3)	1/4 (6.4)
		JLLS	3 5/8 (92.1)	2 23/32 (69.1)	1 (25.4)	1 19/32 (40.5)	1 23/32 (43.7)	13/32 (10.3)	1/4 (6.4)
450 – 600	3	JLLN	3 1/16 (77.8)	2 1/32 (51.6)	1 1/4 (31.8)	1 19/32 (40.5)	7/8 (22.2)	31/64 (12.3)	5/16 (7.9)
		JLLS	3 63/64 (101.2)	2 61/64 (75.0)	1 1/4 (31.8)	2 1/16 (52.4)	1 49/64 (44.8)	31/64 (12.3)	5/16 (7.9)
700 – 800	3	JLLN	3 3/8 (85.7)	2 7/32 (64.3)	1 3/4 (44.5)	2 1/16 (52.4)	7/8 (22.2)	35/64 (13.9)	3/8 (9.5)
		JLLS	4 21/64 (109.9)	3 11/64 (80.6)	1 3/4 (44.5)	2 1/2 (63.5)	1 55/64 (47.2)	35/64 (13.9)	3/8 (9.5)
900 – 1200	3	JLLN	4 (101.6)	2 17/32 (64.3)	2 (50.8)	2 1/2 (63.5)	1 1/32 (26.2)	39/64 (15.5)	7/16 (11.1)
		JLLS	5.27 (133.9)	3.80 (96.5)	2 (50.8)	2.63 (66.8)	2.30 (58.4)	0.67 (15.5)	0.44 (11.2)

Current-Limiting Effects of JLLN (300 V) fuses

SHORT CIRCUIT CURRENT*	APPARENT RMS SYMMETRICAL CURRENT FOR VARIOUS FUSE RATINGS							
	30 A	60 A	100 A	200 A	400 A	600 A	800 A	1200 A
5,000	700	775	1,100	1,650	3,500	4,000	5,000	5,000
10,000	900	1,000	1,400	2,100	4,400	5,100	6,750	8,250
15,000	1,000	1,100	1,600	2,400	5,000	5,900	7,750	10,000
20,000	1,100	1,250	1,800	2,700	5,500	6,500	8,750	11,000
25,000	1,230	1,300	1,950	2,900	6,000	7,000	9,500	12,000
30,000	1,300	1,475	2,050	3,100	6,400	7,500	10,000	12,500
35,000	1,330	1,575	2,150	3,300	6,750	7,750	10,500	13,500
40,000	1,430	1,600	2,300	3,500	7,000	8,000	11,000	14,000
50,000	1,500	1,750	2,400	3,700	7,500	8,750	12,000	15,000
60,000	1,700	1,900	2,700	4,000	8,000	9,500	12,500	16,000
80,000	1,850	2,100	2,800	4,400	9,000	10,500	14,000	17,500
100,000	2,000	2,250	3,150	4,800	9,750	11,500	15,000	18,500
150,000	2,300	2,600	3,600	5,500	11,000	13,000	17,500	22,000
200,000	2,600	2,800	3,900	6,000	12,000	14,500	19,500	24,000

*Prospective RMS Symmetrical Amperes Short-Circuit Current
Note: Data Derived from Peak Let-Thru Curves

Current-Limiting Effects of JLLS (600 V) fuses

SHORT CIRCUIT CURRENT*	APPARENT RMS SYMMETRICAL CURRENT FOR VARIOUS FUSE RATINGS							
	30 A	60 A	100 A	200 A	400 A	600 A	800 A	1200 A
5,000	750	1,225	1,400	2,850	4,600	5,000	5,000	5,000
10,000	945	1,525	1,700	3,600	6,000	8,500	9,400	10,000
15,000	1,050	1,700	2,000	4,050	6,600	9,750	10,500	13,000
20,000	1,150	1,900	2,200	4,450	7,250	10,500	11,000	14,750
25,000	1,300	2,050	2,400	4,800	8,000	11,500	12,500	15,500
30,000	1,375	2,150	2,450	5,000	8,250	12,000	13,750	16,500
35,000	1,400	2,250	2,600	5,100	8,500	13,000	14,000	17,000
40,000	1,425	2,400	2,800	5,200	8,700	14,000	14,750	18,000
50,000	1,600	2,450	2,900	6,000	9,500	14,500	16,000	20,000
60,000	1,650	2,625	3,100	6,250	10,000	15,500	17,300	21,000
80,000	1,825	2,800	3,400	7,000	11,000	17,000	18,750	23,000
100,000	2,000	3,100	3,700	7,250	12,000	18,000	20,000	25,000
150,000	2,250	3,400	4,300	8,500	13,000	21,000	23,000	28,500
200,000	2,450	3,800	4,600	9,000	15,000	23,000	25,000	31,000

*Prospective RMS Symmetrical Amperes Short-Circuit Current
Note: Data Derived from Peak Let-Thru Curves

SLC CLASS G FUSES

480/600 VAC • Time-Delay • 1/2-60 A

Description

Littelfuse SLC fuses provide cost effective branch circuit protection. Fuse length varies to prevent over-fusing. Compact Class G fuses were the first fuse series to approach midget fuse dimensions and meet NEC® requirements for branch-circuit protection.

Applications

- Branch circuit protection

Features/Benefits

- Branch circuit rated
- Current-limiting
- 100 kA interrupting rating
- 600 VAC rated 1/2-20 A

Specifications

Voltage Ratings	600 VAC (1/2 – 20 A) 480 VAC (25 – 60 A) 170 VDC (1/2 – 60 A) (Littelfuse self-certified)
Interrupting Ratings	AC: 100 kA rms symmetrical DC: 10 kA
Ampere Range	1/2 – 60 A
Approvals	Standard 248-5, Class G UL Listed (File No. E81895) CSA Certified (File No. LR29862) Federal Specification WF-1814 (QPL-W-F-1814)
Environmental	RoHS Compliant

Ordering Information

AMPERE RATINGS						
1/2	3	6	12	25	40	60
1	4	8	15	30	45	
2	5	10	20	35	50	

SERIES	AMPERAGE	CATALOG NUMBER	ORDERING NUMBER
SLC	10	SLC010	0SLC010.T

Web Resources

TC Curves, downloadable CAD drawings and other technical information: **www.littelfuse.com/slc**

Recommended Fuse Holders

LFG60 Series (1-20 A) 97
LFG48 Series (25-60 A) 97

Dimensions

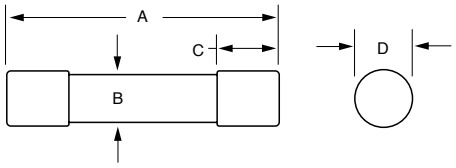

AMPERES	REFER TO FIG. NO.	DIMENSIONS INCHES (mm)			
		A	B	C	D
1/2 – 15	1	1 5/16 (33.3)	3/8 (9.5)	9/32 (7.1)	13/32 (10.3)
20	1	1 13/32 (35.7)	3/8 (9.5)	9/32 (7.1)	13/32 (10.3)
25, 30	1	1 5/8 (41.3)	3/8 (9.5)	9/32 (7.1)	13/32 (10.3)
35 – 60	1	2 1/4 (57.2)	3/8 (9.5)	1/2 (12.7)	13/32 (10.3)

© 2012 Littelfuse POWR-GARD® Products Catalog

CCMR SERIES POWR-PRO® FUSES

POWR-PRO® 600 VAC • Dual Element • Time-Delay • 2/10-60 A

Description

The CCMR series is ideal for space saving protection of motors up to 40 hp*. It was designed specifically to withstand sustained starting currents of small motors. The CCMR 60 fuse is the smallest 60 A fuse available rated at 600 V. Compared to other UL Listed fuses, Class CC fuses are the most current-limiting, rating for rating.

Applications

- Motor and motor branch circuit protection

Features/Benefits

- POWR-PRO® Performance
- Extremely current-limiting
- Ratings up to 60 Amps
- 300 kA Interrupting Rating (self-certified)

Specifications

Voltage Ratings	AC: 600 V DC: 250 V (CCMR 2/10 – 2 A) (CCMR 4 1/2 – 10 A) (CCMR 35 – 60 A) 300 V (CCMR 2 1/4 – 4 A) 500 V (CCMR 12 – 30 A)
Interrupting Ratings	AC: 200 kA rms symmetrical 300 kA Littelfuse self-certified DC: 20 kA
Ampere Range	2/10 – 60 A
Approvals	AC: Standard 248-4, Class CC UL Listed 1/10-30 A (File No. E81895) Standard 248, Class CD UL Listed 35-60 A (File No. E81895) CSA Certified 1/10-30 A (File No. LR29862) DC: Littelfuse self-certified

*Consult Motor Protection Tables on page 211 in the Technical Application Guide section for specific motor sizing information.

Ordering Information

AMPERE RATINGS						
2/10	1	2	3 1/2	6 1/4	12	35
1/4	1 1/4	2 1/4	4	7	15	40
3/10	1 4/10	2 1/2	4 1/2	7 1/2	17 1/2	45
1/2	1 1/2	2 8/10	5	8	20	50
6/10	1 6/10	3	5 6/10	9	25	60
8/10	1 8/10	3 2/10	6	10	30	

SERIES	AMPERAGE	CATALOG NUMBER	ORDERING NUMBER
CCMR	45	CCMR045	CCMR045.T

Web Resources

TC Curves, downloadable CAD drawings and other technical information: **www.littelfuse.com/ccmr**

Recommended Fuse Holders

LFC600 Series 99
L60030C Series 99
LPSC Series 108

Dimensions

Please refer to the Class CC/CD dimensions 31

Peak Let-Thru Curve

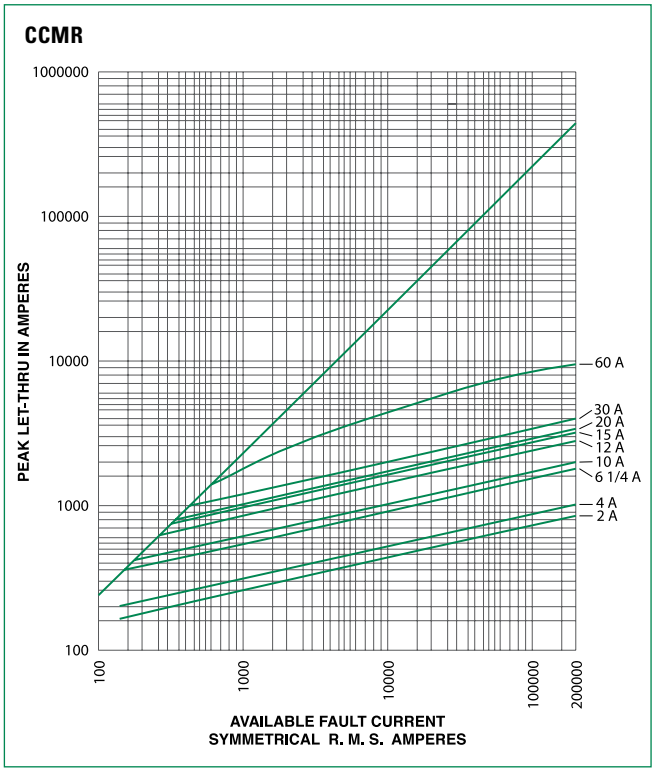

Note: For more information, see Peak Let-Thru Table on pg. 31

CLASS CC FUSES

KLDR Series
600 VAC/300 VDC • Time-Delay • 1/10-30 A

Description
KLDR fuses are time-delay fuses designed to protect control transformers, solenoids and similar inductive components with high magnetizing currents during the first half-cycle. They provide excellent protection of motor branch circuits containing IEC or NEMA rated motor controllers or contactors.

Specifications

Voltage Ratings	AC: 600 V DC: 300 V
Interrupting Ratings	AC: 200 kA rms symmetrical DC: 20 kA
Ampere Range	1/10 – 30 A
Approvals	AC: Standard 248-4, Class CC UL Listed 1/10-30 A (File No. E81895) CSA Certified 1/10-30 A (File No. LR29862) DC: Littelfuse self-certified
Environmental	RoHS Compliant (Except 8-20 A)

Ordering Information

AMPERE RATINGS				
1/10	6/10	1 8/10	4 1/2	10
1/8	3/4	2	5	12
15/100	8/10	2 1/4	5 6/10	15
3/16	1	2 1/2	6	17 1/2
2/10	1 1/8	2 8/10	6 1/4	20
1/4	1 1/4	3	7	25
3/10	1 4/10	3 2/10	7 1/2	30
4/10	1 1/2	3 1/2	8	—
1/2	1 6/10	4	9	—

SERIES	AMPERAGE	CATALOG NUMBER	ORDERING NUMBER
KLDR	10	KLDR010	KLDR010.T

Web Resources
For additional information, visit:
www.littelfuse.com/kldr

Recommended Fuse Holders
L60030C Series 99
LPSC Series 108

Dimensions
Please refer to the Class CC/CD dimensions..... 31

KLKR Series
600 VAC/300 VDC • Fast-Acting • 1/10-30 A

Description
KLKR Series Class CC fuses are fast-acting fuses intended for general purpose branch circuit protection. Their compact size, fast-acting overload response, and highly current-limiting design make them ideal for use in OEM equipment and control panels.

Specifications

Voltage Ratings	AC: 600 V DC: 300 V
Interrupting Ratings	AC: 200 kA rms symmetrical DC: 20 kA
Ampere Range	1/10 – 30 A
Approvals	AC: Standard 248-4, Class CC UL Listed 1/10-30 A (File No. E81895) CSA Certified 1/10-30 A (File No. LR29862) DC: Littelfuse self-certified
Environmental	RoHS Compliant

Ordering Information

AMPERE RATINGS				
1/10	1/2	2 1/2	6	12
1/8	3/4	3	7	15
2/10	1	3 1/2	8	20
1/4	1 1/2	4	9	25
3/10	2	5	10	30

SERIES	AMPERAGE	CATALOG NUMBER	ORDERING NUMBER
KLKR	12	KLKR012	KLKR012.T

Web Resources
For additional information, visit:
www.littelfuse.com/klkr

Recommended Fuse Holders
L60030C Series 99
LPSC Series 108

Dimensions
Please refer to the Class CC/CD dimensions..... 31

© 2012 Littelfuse POWR-GARD® Products Catalog

CLASS CC/CD DIMENSIONS AND CURRENT-LIMITING EFFECTS

Dimensions Inches (mm)

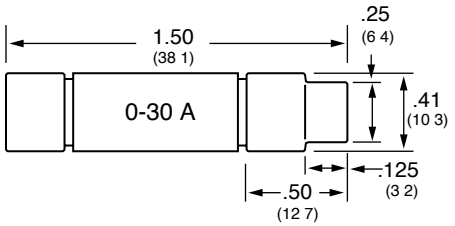

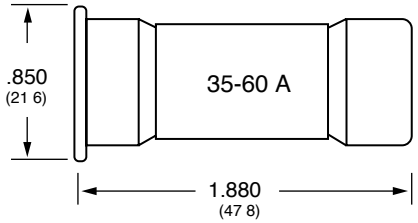

Current-Limiting Effects of CCMR (600 V) fuses

SHORT CIRCUIT CURRENT*	APPARENT RMS SYMMETRICAL CURRENT FOR VARIOUS FUSE RATINGS							
	2 A	4 A	6¼ A	10 A	12 A	15 A	20 A	30 A
5,000	160	190	330	370	525	600	625	750
10,000	180	220	400	440	600	700	725	875
15,000	200	250	430	480	675	775	800	950
20,000	220	260	460	520	720	825	850	1,000
25,000	230	280	480	550	750	850	900	1,050
30,000	240	290	500	570	800	900	950	1,125
35,000	245	300	520	590	825	925	975	1,175
40,000	255	310	550	600	850	975	1,000	1,200
50,000	260	330	570	640	875	1,000	1,100	1,300
60,000	280	340	600	670	900	1,050	1,125	1,350
80,000	300	360	625	700	1,000	1,125	1,200	1,400
100,000	310	380	650	750	1,050	1,200	1,250	1,500
150,000	340	420	700	800	1,150	1,300	1,400	1,600
200,000	350	440	750	850	1,200	1,400	1,450	1,750

*Prospective RMS Symmetrical Amperes Short-Circuit Current
Note: Data Derived from Peak Let-Thru Curves

Peak Let-Thru Curve KLDR

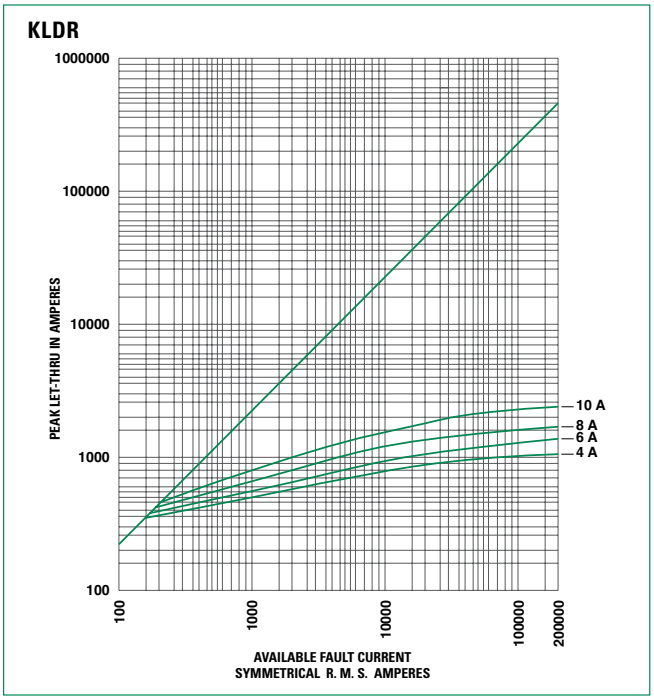

Peak Let-Thru Curve KLKR

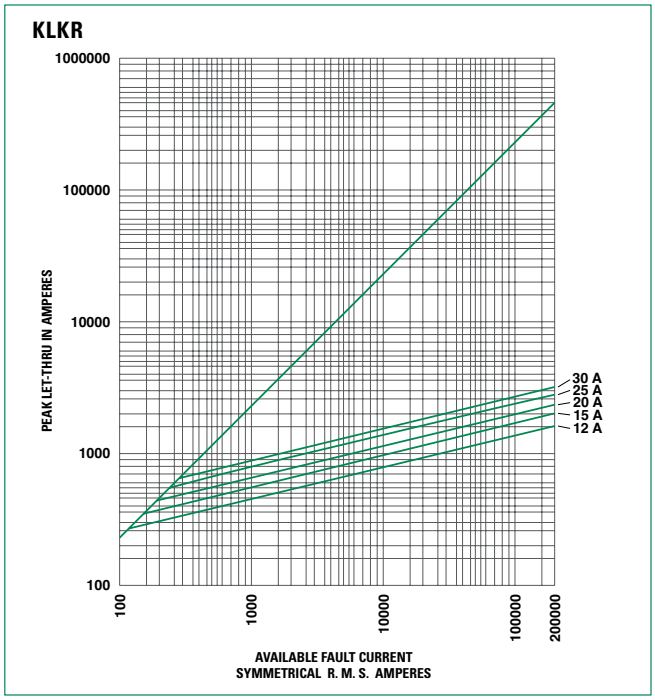

10 X 38 MIDGET FUSES

KLK Series
Fast-Acting Fuse 600 VAC

UL CSA QPL RoHS

AMPERE RATINGS			
1/10	1	5	15
1/8	1 1/2	6	20
2/10	2	7	25
1/4	2 1/2	8	30
3/10	3	9	—
1/2	3 1/2	10	—
3/4	4	12	—

Specifications

Fast-acting, high-interrupting capacity fuse designed for control circuits, HID lighting, street-lighting, meter circuits.

Voltage Ratings 600 VAC
500 VDC
Interrupting Ratings 100 kA @ 600 VAC
50 kA @ 500 VDC
(capable of 200 kA)
Dimensions **L** 38.1mm (1 1/2")
D 10.31mm (13/32")

www.littelfuse.com/klk

KLKD Series
Fast-Acting Fuse 600 VAC/600 VDC

UL CSA IEC TÜV gPV RoHS

AMPERE RATINGS			
1/10	1	5	15
1/8	1 1/2	6	20
2/10	2	7	25
1/4	2 1/2	8	30
3/10	3	9	—
1/2	3 1/2	10	—
3/4	4	12	—

Specifications

Fast-acting, high DC rated fuse used in solar combiner boxes, DC control circuits, UPS protection. Available in standard and board mount configurations (PCB).

Voltage Ratings 600 VAC/DC
Interrupting Ratings 100 kA @ 600 VAC
10 kA @ 600 VDC (UL2579)
50 kA @ 600 VDC (UL248-14)
(capable of 200 kA)
Dimensions **L** 38.1mm (1 1/2")
D 10.31mm (13/32")

www.littelfuse.com/klkd

FLM Series
Time-Delay Fuse 250 VAC

UL CSA QPL RoHS Pb

AMPERE RATINGS			
1/10	1 1/8	3	8
15/100	1 1/4	3 2/10	9
2/10	1 4/10	3 1/2	10
1/4	1 1/2	4	12
3/10	1 6/10	4 1/2	15
4/10	1 8/10	5	20
1/2	2	5 6/10	25
6/10	2 1/4	6	30
8/10	2 1/2	6 1/4	—
1	2 8/10	7	—

Specifications

250V time-delay fuses used to protect circuits with high in-rush. Especially suited for supplemental protection of small motors.

Voltage Ratings 250 VAC
125 VDC self-certified @ 10 kA
Interrupting Ratings 10 kA @ 250 VAC
Dimensions **L** 38.1mm (1 1/2")
D 10.31mm (13/32")

www.littelfuse.com/flm

FLQ Series
Time-Delay Fuse 500 VAC

UL CSA RoHS

AMPERE RATINGS			
1/10	8/10	3 2/10	9
1/8	1	3 1/2	10
15/100	1 1/8	4	12
3/16	1 1/4	4 1/2	14
2/10	1 1/2	5	15
1/4	1 6/10	5 6/10	20
3/10	2	6	25
4/10	2 1/4	6 1/4	30
1/2	2 1/2	7	—
6/10	3	8	—

Specifications

500V time-delay fuses for supplemental protection of control power transformers, solenoids, and circuits with high in-rush. Ideal for 480 V systems.

Voltage Ratings 500 VAC
300 VDC self-certified @ 10 kA
Interrupting Ratings 10 kA @ 500V AC
Dimensions **L** 38.1mm (1 1/2")
D 10.31mm (13/32")

www.littelfuse.com/flq

BLN Series
Fiber Body Fast-Acting Fuse 250 VAC

UL CSA QPL RoHS

AMPERE RATINGS				
1	4	8	15	30
2	5	10	20	—
3	6	12	25	—

Specifications

Fiber tube, 250 volt BLN fuses provide low-cost protection for military applications and control circuits.

Voltage Ratings 250 VAC
Interrupting Ratings 10 kA @ 250 VAC
Dimensions **L** 38.1mm (1 1/2")
D 10.31mm (13/32")

www.littelfuse.com/bln

BLF Series
Laminated Fast-Acting Fuse 125/250 VAC

UL CSA RoHS

AMPERE RATINGS			
1/2	3	7	15
1	4	8	20
1 1/2	5	9	25
2	6	10	30
2 1/2	6 1/4	12	—

Specifications

Laminated tube BLF fuses are the lowest price midget fuse. They are suitable for control circuit and instrument protection in dry locations.

Voltage Ratings 250 VAC 1/2 - 15 A;
125 VAC 20 - 30 A
Interrupting Ratings 10 kA @ rated VAC
Dimensions **L** 38.1mm (1 1/2")
D 10.31mm (13/32")

www.littelfuse.com/blf

© 2012 Littelfuse POWR-GARD® Products Catalog

10 X 38 MIDGET FUSES

BLS Series
Fast-Acting Fuse
600 VAC/250 VAC

RoHS

AMPERE RATINGS			
2/10	1	3	8
4/10	1 1/2	4	10
1/2	1 6/10	5	—
3/4	1 8/10	6	—
8/10	2	7	—

Specifications

Slightly shorter than a traditional 10 x 38, BLS fuses provide space saving protection for low amperage applications.

Voltage Ratings 600 VAC 2/10 - 5 A; 250 VAC 6 - 10 A
Interrupting Ratings 10 kA @ rated VAC
Dimensions **L** 34.9 mm (1 3/8") **D** 10.31 mm (13/32")

www.littelfuse.com/bls

KLQ Series
Increased Time-Delay
600 VAC

RoHS

AMPERE RATINGS		
1	2	5
1 6/10	3	6

Specifications

Same physical size as the BLS fuse with more time delay. Designed to protect gaseous vapor fixtures, HID ballasts and other electronic lighting circuits.

Voltage Ratings 600 VAC
Interrupting Ratings 10 kA @ rated VAC
Dimensions **L** 34.9 mm (1 3/8") **D** 10.31 mm (13/32")

www.littelfuse.com/klq

FLA Series
Time-Delay Pin Indicating Fuse
125 VAC

AMPERE RATINGS			
1/10	1 1/8	3	8
15/100	1 1/4	3 2/10	10
2/10	1 4/10	3 1/2	12*
1/4	1 1/2	4	15*
3/10	1 6/10	4 1/2	20*
4/10	1 8/10	5	25*
1/2	2	5 6/10	30*
6/10	2 1/4	6	—
8/10	2 1/2	6 1/4	—
1	2 8/10	7	—

*12-30 A are dual tube design

Specifications

Pin indicating time-delay fuses. Use in conjunction with special fuse blocks to operate mechanical signal switches or energize alarm circuits.

Voltage Ratings 125 VAC
Interrupting Ratings 10 kA @ rated VAC
Dimensions **L** 38.1 mm (1 1/2") **D** 10.31 mm (13/32")

www.littelfuse.com/fla

FLU Series
Multimeter Protection
1000 VAC/VDC

RoHS

Specifications

Multimeter protection fuses.

Voltage Rating 1000 VAC/VDC
Interrupting Rating 44/100 A: 10 kA; 11 A: 20 kA
Ampere Ratings 44/100 & 11 A
Approvals UL Recognized (File No. E10480); CSA Certified (File No. LR29862)
Dimensions 44/100 A: 13/32" x 1 3/8"; 11 A: 13/32" x 1 1/2"

www.littelfuse.com/flu

10 x 38 Midget Holder Configurations

STANDARD	TOUCH SAFE QUICK CONNECT	BOARD MOUNT
L60030M pg. 99	LPSM QC pg.111	L60030MPCB pg. 101

TOUCH SAFE

LPSM pg. 108	LFPHV pg. 112	UP-LINK™ pg. 107

Section Overview

Diverse application needs require a broad range of fuses. Littelfuse offers a full line of fuses for various applications. As the market leader in Automotive and Electronics fuses, we are able to deliver innovative circuit protection solutions to our customers. Visit **www.littelfuse.com** for our full line of Automotive and Electronics solutions.

ELECTRONIC FUSES AND BLADE FUSES

Table of Contents

Glass/Electronic Fuses 35-37

Automotive/Blade Fuses 38-39

HIGH DC VOLTAGE AND PC BOARD MOUNT FUSES

505 Series
Lead-Free 3AB, Fast-Acting

AMPERE RATINGS		
10	16	25
12	20	30

Specifications

A 500 VAC/VDC rated ceramic fuse with remarkable interrupting rating in a compact 6.3 x 32 mm package, well suited for circuit protection in high energy applications.

Voltage Rating 450 VAC/DC (10 – 12 A)
250 VDC (10 – 12 A)
500 VAC/DC (16 – 30 A)
Sample Part 0505010.MXP*
Axial Lead 505_XEP Series

www.littelfuse.com/505

*Bulk configurations only

477 Series
5 x 20 mm Slo-Blo® Fuse

AMPERE RATINGS			
.5	2	5	10
.8	3.15	6.3	12
1	4	8	16

Specifications

500 VAC/400 VDC rated, 5 x 20 mm, time-lag, surge withstand ceramic body fuse.

Voltage Rating 500 VAC
400 VDC
Sample Part 0477002.MXP*
Axial Lead 477_XEP Series

www.littelfuse.com/477

*Bulk configurations only

Dimensions mm (inches)

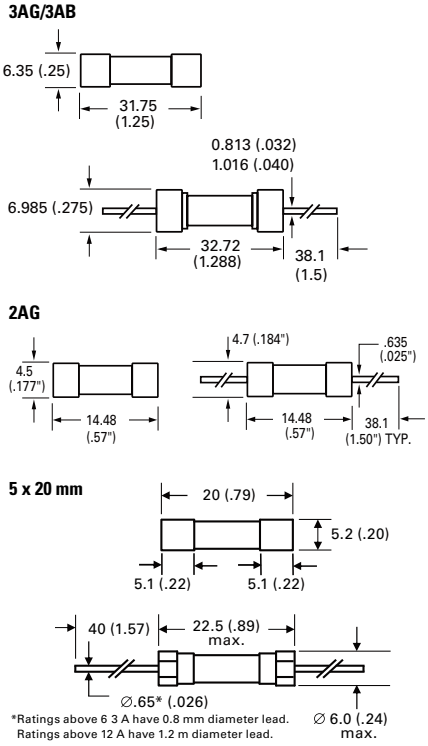

273 Series
Fast-Acting Microfuse

AMPERE RATINGS					
1/500	1/32	1/8	4/10	3/4	2
1/200	1/20	2/10	1/2	8/10	3
1/100	1/16	1/4	6/10	1	4
1/64	1/10	3/10	7/10	1 1/2	5

Specifications

Similar to 272 and 278 series, except has transparent cap for visual indication of fuse status.
*See web for approvals by part.

Voltage Rating 125 VAC/DC
Sample Part 0273002.V

www.littelfuse.com/273

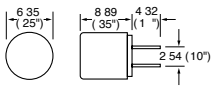

251 Series
Fast-Acting Pico® II Fuse

AMPERE RATINGS					
1/16	3/8	1	2 1/2	4	10
1/8	1/2	1 1/2	3	5	12
1/4	3/4	2	3 1/2	7	15

Specifications

Subminiature fuse for soldered mounting on printed circuit boards. Available on tape and reel for automatic insertion.
*See web for approvals by part.

Voltage Ratings 125 V 1/16 – 10 A
32 V 12 – 15 A
Sample Part 0251001.NAT1L

www.littelfuse.com/251

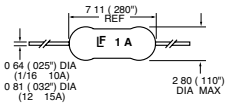

451 Series
NANO²® Very Fast-Acting

Add "L" suffix when ordering RoHS compliant 451 series

AMPERE RATINGS					
0.01	0.187	.075	2	7	30
0.031	0.2	1	2.25	8	35
0.062	0.25	1.25	2.5	10	—
0.1	0.3	1.5	3	12	—
0.125	0.375	1.6	4	15	—
0.15	0.5	1.75	5	20	—
0.175	0.6	1.8	6	25	—

Specifications

The Nano² SMF Fuse is a very small, Wire-in-Air (WIA) square shape surface mount fuse which is very suitable for the secondary side circuit over-current protection applications and is designed for PCB using surface mount technology
*See web for approvals by part.

Voltage Rating 65 – 125 V
Sample Part 0451.125MP

www.littelfuse.com/451

LEADED AND CARTRIDGE FUSES

312/318 Series
3AG Fast-Acting

AMPERE RATINGS					
1/16	2/10	3/4	1 8/10	5	15
1/10	1/4	1	2	6	20
1/8	3/10	1 1/4	2 1/4	7	25
15/100	3/8	1 1/2	2 1/2	8	30
17.5/100	1/2	1 6/10	3	10	35
3/16	6/10	1 3/4	4	12	—

Specifications

Designed for fast-acting protection of electronic equipment and appliances. The "standard" fast-acting, glass tube fuse.

Voltage Ratings 250 VAC 1/100 – 10 A
32 VAC 12 – 35 A

Sample Part 0312005.VXP

www.littelfuse.com/312

For fuses with axial leads, request 318 Series.

313/315 Series
3AG Slo-Blo®

AMPERE RATINGS						
1/100	17.5/100	1/2	1 1/4	2 8/10	7	30
1/32	3/16	6/10	1 1/2	3	8	—
4/100	2/10	7/10	1 6/10	3 2/10	10	—
1/16	1/4	3/4	1 8/10	4	12	—
1/10	3/10	8/10	2	5	15	—
1/8	3/8	1	2 1/4	6 1/4	20	—
15/100	4/10	1 2/10	2 1/2	6 3/10	25	—

Specifications

313 and 315 series fuses have time-delay in the overload range, which provides superior protection for inductive loads such as motors, transformers, and solenoids.

Voltage Ratings 250 VAC 1/100 – 8 A
32 VAC 10 – 30 A

Sample Part 0313005.VXP

www.littelfuse.com/313

For fuses with axial leads, request 315 Series.

314/324 Series
3AB Fast-Acting

AMPERE RATINGS				
3/8	2	6	12	30
1/2	3	7	15	40
3/4	4	8	20	—
1	5	10	25	—

Specifications

Similar to 312 series, but ceramic tube permits higher interrupting ratings and voltage ratings: 250 volt ratings to 40 amps.

Voltage Rating 250 VAC 1/8 – 40 A
125 VDC 3/8 – 30 A
150 VDC 40 A

Sample Part 03145005.VXP

www.littelfuse.com/314

For fuses with axial leads, request 324 Series.

326/325 Series
3AB Slo-Blo®

AMPERE RATINGS					
1/100	3/16	6/10	1 1/2	4	15
1/32	2/10	7/10	1 6/10	5	20
1/16	1/4	3/4	2	6 1/4	25
1/10	3/10	8/10	2 1/2	7	30
1/8	3/8	1	2 8/10	8	—
15/100	4/10	1 2/10	3	10	—
17.5/100	1/2	1 1/4	3 2/10	12	—

Specifications

The 326 series fuse has time-delay similar to the 313 series, but the ceramic body permits higher voltage ratings for the 8 – 30 ampere sizes and faster opening of short-circuits.

Voltage Ratings 250 VAC 1/100 – 30 A
125 VDC 1/4 – 3 A
125 VDC 12 – 30 A

Sample Part 0326.100VXP

www.littelfuse.com/326

For fuses with axial leads, request 325 Series.

229/230 Series
2AG Slo-Blo®

AMPERE RATINGS			
1/4	3/4	2	4
.350	8/10	2 1/4	5
3/8	1	2 1/2	6
1/2	1 1/4	3	7
6/10	1 1/2	3 1/2	—

Specifications

2AG indicating fuses instantly identify themselves upon opening by showing a discoloration of their glass bodies, eliminating guesswork. This unique design offers the same quality performance characteristics as the standard 2AG fuse design.*

Voltage Ratings 250 VAC 1/4 – 3 1/2 A
125 VAC 4 – 7 A
125 VDC 1/4 – 7 A

Sample Part 02291.25VXP

www.littelfuse.com/229

For fuses with axial leads, request 230 Series.
**Must add "S" suffix when ordering indicating fuse*

225/224 Series
2AG Fast-Acting

AMPERE RATINGS				
3/8	1	2 1/2	4	7
1/2	1 1/2	3	5	8
3/4	2	3 1/2	6	10

Specifications

Fast-acting performance of the 312, 3AG fuses in less than one-third the space. For protection of electronic equipment and appliances.

Voltage Ratings 250 VAC 1/10 – 3 1/2 A
125 VAC 4 – 10 A
125 VDC 3/8 – 3 1/2 A

Sample Part 0225003.VXP

www.littelfuse.com/225

For fuses with axial leads, request 224 Series.

Note: All fuses on this page are available in packaged and bulk configurations

© 2012 Littelfuse POWR-GARD® Products Catalog

5 X 20 mm IEC LEADED AND CARTRIDGE FUSES

215 Series
5 x 20 mm IEC Slo-Blo®

AMPERE RATINGS						
.125	.315	.800	2	5	12	25
.160	.400	1	2.5	6.3	15	—
.200	.500	1.25	3.15	8	16	—
.250	.630	1.6	4	10	20	—

Specifications

Time-delay protection of electronic equipment and appliances when fuses to International Standards are required. Replacement fuse for foreign equipment.

Voltage Rating 250 VAC
Sample Part 0215005.VXP

www.littelfuse.com/215

For fuses with axial leads, request 215_XEP series.

216 Series
5 x 20 mm IEC Fast-Acting

AMPERE RATINGS						
.050	.125	.315	.800	2	5	12.5
.063	.160	.400	1	2.5	6.3	16
.080	.200	.500	1.25	3.15	8	—
.100	.250	.630	1.6	4	10	—

Specifications

Fast-acting protection of electronic equipment and appliances when fuses to International Standards are required. Replacement fuse for foreign equipment.

Voltage Rating 250 VAC
Sample Part 0216005.VXP

www.littelfuse.com/216

For fuses with axial leads, request 216_XEP series.

217 Series
5 x 20 mm IEC Fast-Acting

AMPERE RATINGS						
.032	.080	.200	.500	1.25	3.15	8
.040	.100	.250	.630	1.6	4	10
.050	.125	.315	.800	2	5	15
.063	.160	.400	1	2.5	6.3	—

Specifications

Fast-acting protection of electronic equipment and appliances when fuses to International Standards are required. Replacement fuse for foreign equipment.

Voltage Rating 250 VAC
Sample Part 0217005.VXP

www.littelfuse.com/217

For fuses with axial leads, request 217_XEP series.

218 Series
5 x 20 mm IEC Slo-Blo®

AMPERE RATINGS						
.032	.080	.200	.500	1.25	3.15	8
.040	.100	.250	.630	1.6	4	10
.050	.125	.315	.800	2	5	15
.063	.160	.400	1	2.5	6.3	16

Specifications

Time-delay protection of electronic equipment and appliances when fuses to International Standards are required. Replacement fuse for foreign equipment.

Voltage Rating 250 VAC
Sample Part 0218005.VXP

www.littelfuse.com/218

For fuses with axial leads, request 218_XEP series.

235 Series
5 x 20 mm UL/CSA Fast-Acting

AMPERE RATINGS					
1/10	3/10	7/10	1 6/10	3 1/2	7
1/8	4/10	8/10	2	4	—
2/10	1/2	1	2 1/2	5	—
1/4	6/10	1 1/4	3	6	—

Specifications

5 x 20 mm fuses designed to UL and CSA standards. Fast-acting protection of electronic equipment and appliances.

Voltage Ratings 250 VAC 1/10 – 3 1/2 A
125 VAC 4 – 7 A
Sample Part 0235005.VXP

www.littelfuse.com/235

For fuses with axial leads, request 235_XEP series.

239 Series
5 x 20 mm UL/CSA Slo-Blo®

AMPERE RATINGS						
8/100	2/10	1/2	8/10	2	3 2/10	7
1/10	1/4	6/10	1	2 1/2	3 1/2	—
1/8	3/10	7/10	1 1/4	3	4	—
15/100	4/10	3/4	1 6/10	3 15/100	5	—

Specifications

5 x 20 mm fuses designed to UL and CSA standards. Time-delay protection of electronic equipment and appliances.

Voltage Ratings 250 VAC 2/10 – 3 1/2 A
125 VAC 4 – 7 A
Sample Part 0239005.VXP

www.littelfuse.com/239

For fuses with axial leads, request 239_XEP series.

Note: All fuses on this page are available in packaged and bulk configurations

BLADE FUSES

MINI® Smart Glow

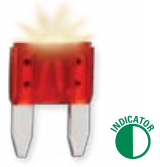

Specifications

Smart Glow fuses are innovative automotive style fuses (ATO, MINI, and MAXI) that feature an indicator light that glows when the fuse is blown, saving time to troubleshoot an open circuit.
Sample part # 0MIN010.VPGLO

Voltage Rating 14 VDC

www.littelfuse.com/smartglow

MINI® Fast-Acting

UL RoHS Pb

Specifications

The MINI® Fuse, with its miniature design patented by Littelfuse, meets the need for more circuits to be protected while utilizing less space.
Sample part # 0MIN020.V

Voltage Rating 32 VDC

www.littelfuse.com/mini

Fuses Rated 58 V Low Profile MINI®

UL RoHS Pb

Specifications

The low profile MINI has similar performance as the standard mini fuse. The lower overall height allows for more space and weight savings.
Sample part # LMIN010.V

Voltage Rating 58 VDC

www.littelfuse.com/lmin

MINI dimensions in mm

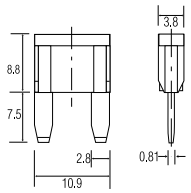

Low Profile MINI dimensions in mm (inches)

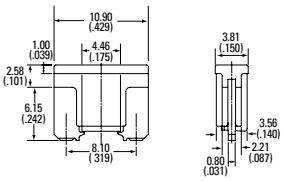

ATO® Smart Glow

Specifications

Smart Glow fuses are innovative automotive style fuses (ATO, MINI, and MAXI) that feature indicator light that glows when the fuse is blown, saving time to troubleshoot an open circuit.
Sample part # 0ATO010.VPGLO

Voltage Rating 14 VDC

www.littelfuse.com/smartglow

ATO® Fast-Acting

UL CSA RoHS Pb

Specifications

The ATO® Fuse was designed and patented by Littelfuse in 1976 and set the standard for automotive circuit protection. It features industry standard color coding to indicate amperage rating.
Sample part # 0ATO020.V

Voltage Rating 32 VAC/DC

www.littelfuse.com/ato

ATO Fuses are available in packaged and bulk configurations. See 257 series on web.

ATO dimensions in mm (inches)

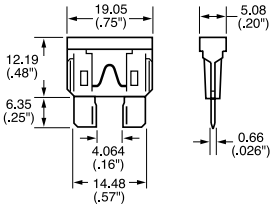

ATO® / MINI® Color Key

CURRENT RATING	HOUSING COLOR
1 A	
2 A	
3 A	
4 A	
5 A	
7.5 A	
10 A	
15 A	
20 A	
25 A	
30 A	
40 A	

Note: MINI not available in 1 A or 40 A.

MAXI™ Smart Glow

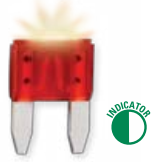

Specifications

Smart Glow fuses are innovative automotive style fuses (ATO, MINI, and MAXI) that feature an indicator light that glows when the fuse is blown, saving time to troubleshoot an open circuit.
Sample part # 0MAX030.XPGLO

Voltage Rating 14 VDC

www.littelfuse.com/smartglow

MAXI™ Slo-Blo

RoHS

Specifications

Designed and patented by Littelfuse, the MAXI™ Fuse is ideal for motor powered applications which have large inrush currents.
Sample part # 0MAX030.X

Voltage Rating 32 VDC

www.littelfuse.com/maxi

MAXI dimensions in mm (inches)

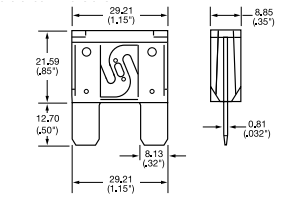

MAXI™ Color Key

CURRENT RATING	HOUSING COLOR
20 A	
25 A	
30 A	
35 A	
40 A	
50 A	
60 A	
70 A	
80 A	

MAXI Fuses are available in packaged and bulk configurations. See 299 series on web.

© 2012 Littelfuse POWR-GARD® Products Catalog

BLADE FUSES

FHA Blade Fuse Holders—In-Line Fuse Holder for ATO® Style Blade Fuse

RoHS

Dimensions in mm

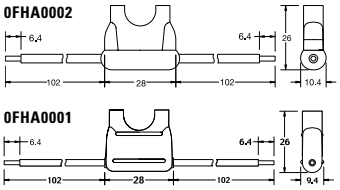

Used with ATO Fuse 1 to 20 A or 25 A and 30 A. Supplied with two 4" (102 mm) wire leads.

www.littelfuse.com/fha

PART NUMBER	DESCRIPTION	FUSE RATING
0FHA0001_	16AWG/1.3mm² STRANDED BLACK WIRE	20 A
0FHA0002_	12AWG/3.3mm² STRANDED ORANGE WIRE	30 A

Wire length, color and diameter can be customized upon request.

FHAC Blade Fuse Holders—In-Line Splash-Waterproof Fuse Holder for ATO® Style Blade Fuse

RoHS

Dimensions in mm

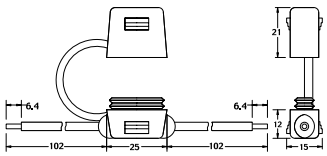

Used with ATO Fuse 1 to 20 A or 25 A and 30 A. Supplied with two 4" (102 mm) wire leads. Includes protective cover for harsh environment.

www.littelfuse.com/fha

PART NUMBER	DESCRIPTION	FUSE RATING
FHAC0001_	16AWG/1.3mm² STRANDED BLACK WIRE	20 A
FHAC0002_	12AWG/3.3mm² STRANDED ORANGE WIRE	30 A

Wire length, color and diameter can be customized upon request.

FHM Blade Fuse Holders—In-Line Splash-Waterproof Fuse Holder for MINI® Style Blade Fuse

RoHS

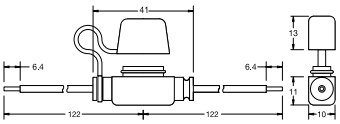

PART NUMBER	DESCRIPTION	FUSE RATING
0FHM0001_	14AWG/2.1mm² STRANDED BLACK WIRE	20 A
0FHM0002_	12AWG/3.3mm² STRANDED ORANGE WIRE	30 A

Wire length, color and diameter can be customized upon request.

Used with MINI Fuse 1 to 20 A or 25 A and 30 A. Supplied with two 4.78" (122 mm) wire leads. Includes protective cover for harsh environment.

www.littelfuse.com/fhm

MAH Blade Fuse Holders—In-Line Fuse Holder for MAXI™ Style Blade Fuse

Dimensions in mm

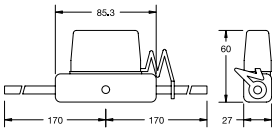

PART NUMBER	DESCRIPTION	FUSE RATING
0MAH0001Z	WIRE COLOR BLACK	60 A

Supplied with two 6", 6-gauge wire leads for up to 60 A MAXI Fuse applications, this In-Line Fuse holder also provides a protective cover for harsh under-the-hood environments. Mounting hole permits easy bulkhead installation.

www.littelfuse.com/mah

JCASE® Cartridge Fuse Rated 32 V

RoHS Pb

Specifications

The JCASE is a cartridge style fuse with female terminal design. JCASE provides both increased time delay and low voltage drop to protect high current circuits. JCASE has the ability to handle in-rush currents. The JCASE was designed and patented by Littelfuse.

www.littelfuse.com/jcase

Low Profile JCASE® Fuse Rated 58 V

RoHS Pb

Specifications

The Low Profile JCASE fuse has similar performance characteristics as the standard JCASE fuse. The lower overall height reduction allows for more space and weight savings and also allows for a shorter male blade terminal, saving additional weight and material savings in fuse box designs.

www.littelfuse.com/ljcase

JCASE® 32 V
Dimensions in mm

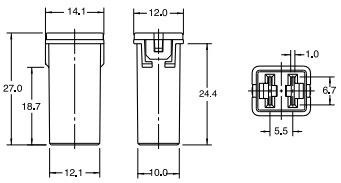

Low Profile JCASE® 58 V
Dimensions in mm

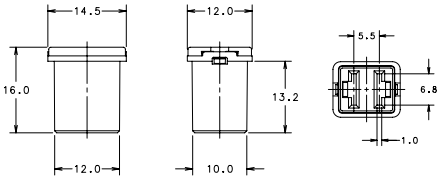

JCASE® Color Key

CURRENT RATING	HOUSING COLOR
20 A	
25 A	
30 A	
40 A	
50 A	
60 A	

Section Overview

Littelfuse is your source for a fast replacement of E- and R-rated medium voltage fuses. Our emergency service gets you the fuses you need quickly to minimize downtime of your critical operations.

MEDIUM VOLTAGE FUSES

Table of Contents

Medium Voltage Fuses Overview 41

R-Rated Medium Voltage Fuses 42

E-Rated Medium Voltage Fuses 44

Littelfuse®
Expertise Applied | Answers Delivered

MEDIUM VOLTAGE FUSES

2,400-38,000 VAC • Current-Limiting

Description

Littelfuse® offers a selection of E- and R-rated medium voltage fuses for the protection of transformers, potential transformers, feeders, and motor circuits. Single, double, and triple barrel designs are available to cover a wide range of current, voltage, and interrupting ratings. Conventional ferrule type, clip lock, and bolt-in mounting configurations are available for virtually any application. Hermetically sealed fuses for use in hazardous environments are also offered.

Contact the factory or your local Littelfuse representative for additional fuse ratings or custom mounting configurations.

24-Hour Emergency Service - Call 800-227-0029, Option 6.

Applications

- Power Transformer Protection
- Potential Transformer Protection
- Motor Controller Back-up Protection
- Fused Switches
- Feeder Circuits

Current-limiting E- and R-rated fuses are equipped with a mechanical indicator or striker pin that protrudes through the fuse cap upon operation of the fuse. This provides visual identification of a blown fuse and can be used as a trigger for external devices.

Note: Extension distance 1/2" minimum; extension force 2 lb. minimum.

General Information

The terms "Medium Voltage" and "High Voltage" have been used interchangeably by many people to describe fuses operating above 600 volts. Technically speaking, medium voltage fuses are those intended for the voltage range from 2,400 to 38,000 VAC. High voltage fuses are for circuits carrying voltages greater than 38,000 VAC.

E-rated fuses are considered to be general purpose fuses and can be used to protect against low and high values of fault current. R-rated fuses are designed for back-up protection. They must be used in series with other devices such as motor overload relays in order to achieve both overload and short-circuit protection.

Medium voltage fuses are not intended to provide overload protection in the same sense as fuses rated 600 volts or less. Medium voltage fuse current ratings do not have the same meanings as the ampere ratings of low voltage fuses.

All medium voltage fuses are limited in their ability to interrupt low value overcurrents, especially those between 100% and 200% of the fuse's continuous current rating. They are designed to carry their rated current without exceeding the temperature rise permitted by NEMA and ANSI standards.

Bolt-in Mount Fuses

R-RATED MEDIUM VOLTAGE FUSES

Current-Limiting

Description

R-rated fuses provide required short-circuit protection for medium voltage motors, motor controllers and associated circuitry. These components have limited ability to absorb the energy of large short-circuit currents. Medium voltage motor controllers contain overload relays which provide both overload protection and locked rotor protection to the motor. The controllers are also intended to interrupt low value short-circuits within the capability of the motor controller. This protects the medium voltage fuse from sustained overcurrents which are less than their minimum interrupting rating.

NEMA Standards for R-rated medium voltage power fuses require they operate within 15-35 seconds when subjected to an rms current 100 times the R rating. For example, a fuse with a 2R rating will open within 15 to 35 seconds on an applied current of 2 x 100 = 200 amperes.

Ordering Number **130-4R-1C-5.5**

- 5.5 — Max Voltage (KV)
- 1C — Style:
  - C (Cartridge)
  - B (Bolt Mount)
  - IB (Inverted Bolt Mount)
  - BI (Bolt-In Mount)
- 1 — No. of Barrels
- 4R — Rating (size)
- 130 — Continuous Current

Characteristics

Voltage Ratings	2,750 V – 8,250 V
Current Range	2R – 36R

Options

- Hermetically sealed for use in hazardous locations (add "S" suffix to part number)
- Bolt-in mounting configurations

Hookeye Feature*

For hookeye attachment; add "W" suffix to part number

*See web for Bolt Mount, Inverted Bolt Mount, and Bolt-W dimensions

Medium Voltage Fuse Protection

POWR-GARD® medium voltage fuses provide short-circuit protection for motors and transformers rated 2,400 to 38,000 volts AC. Visit **www.littelfuse.com/technicalcenter** for additional protection tables, sizing recommendations, and applications.

Dimensions

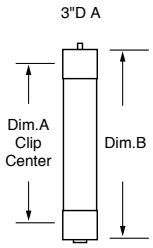

Figure 1

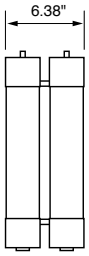

Figure 2

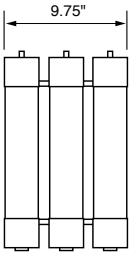

Figure 3

Cartridge "C"

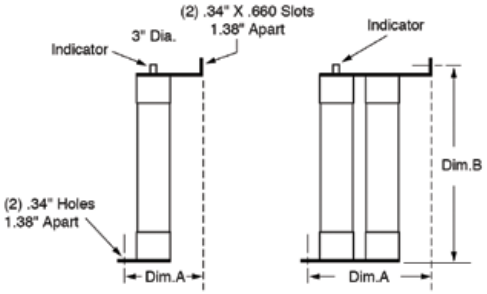

Bolt Mount "B"

Sample Part #: 130-4R-1B-5.5

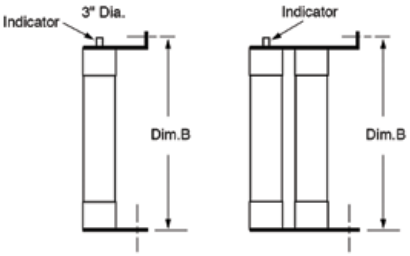

Inverted-Bolt "IB"

Sample Part #: 130-4R-1IB-5.5

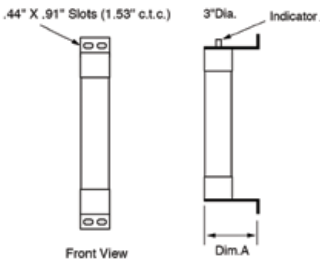

Bolt-In Mount "BI"

Sample Part #: 130-4R-1BI-5.5

© 2012 Littelfuse POWR-GARD® Products Catalog

R-RATED MEDIUM VOLTAGE FUSES

Current-Limiting

R RATED	ORDERING/ CATALOG NUMBER	SIZE	MAXIMUM CONTINUOUS CURRENT @ 40 DEGREES C°	DIM. A (INCHES)	DIM. B (INCHES)	MINIMUM INTERRUPTING RATING RMS AMPS	MAXIMUM INTERRUPTING RATING RMS (ASYM)*	FIGURE NUMBER
2.75 KV	702R1C2.75	2R	70	7"	10.875"	170	80,000	1
	1003R1C2.75	3R	100	7"	10.875"	250	80,000	1
	1304R1C2.75	4R	130	7"	10.875"	340	80,000	1
	1505R1C2.75	5R	150	7"	10.875"	390	80,000	1
	1706R1C2.75	6R	170	7"	10.875"	500	80,000	1
	2009R1C2.75	9R	200	7"	10.875"	760	80,000	1
	23012R1C2.75	12R	230	7"	10.875"	1000	80,000	1
	39018R2C2.75	18R	390	7"	10.875"	1500	80,000	2
	45024R2C2.75	24R	450	7"	10.875"	1950	80,000	2

R RATED	ORDERING/ CATALOG NUMBER	SIZE	MAXIMUM CONTINUOUS CURRENT @ 40 DEGREES C°	DIM. A (INCHES)	DIM. B (INCHES)	MINIMUM INTERRUPTING RATING RMS AMPS	MAXIMUM INTERRUPTING RATING RMS (ASYM)*	FIGURE NUMBER
5.5 KV	702R1C5.5	2R	70	12"	15.875"	170	80,000	1
	1003R1C5.5	3R	100	12"	15.875"	250	80,000	1
	1304R1C5.5	4R	130	12"	15.875"	340	80,000	1
	1505R1C5.5	5R	150	12"	15.875"	390	80,000	1
	1706R1C5.5	6R	170	12"	15.875"	500	80,000	1
	2009R1C5.5	9R	200	12"	15.875"	760	80,000	1
	23012R1C5.5	12R	230	12"	15.875"	1000	80,000	1
	39018R2C5.5	18R	390	12"	15.875"	1500	80,000	2
	45024R2C5.5	24R	450	12"	15.875"	1950	80,000	2
	48026R2C5.5	26R	480	12"	15.875"	2100	80,000	2
	55030R2C5.5	30R	550	12"	15.875"	2400	80,000	2
	60032R2C5.5	32R	600	12"	15.875"	2600	80,000	2
	65036R2C5.5	36R	650	12"	15.875"	2900	80,000	2
	55030R3C5.5	30R	550	12"	15.875"	2400	80,000	3
	60032R3C5.5	32R	600	12"	15.875"	2600	80,000	3
	65036R3C5.5	36R	650	12"	15.875"	2900	80,000	3

R RATED	ORDERING/ CATALOG NUMBER	SIZE	MAXIMUM CONTINUOUS CURRENT @ 40 DEGREES C°	DIM. A (INCHES)	DIM. B (INCHES)	MINIMUM INTERRUPTING RATING RMS AMPS	MAXIMUM INTERRUPTING RATING RMS (ASYM)*	FIGURE NUMBER
5.5 KV 14"CLIP CENTERS	702R1C5.5X	2R	70	14"	17.875"	170	80,000	1
	1003R1C5.5X	3R	100	14"	17.875"	250	80,000	1
	1304R1C5.5X	4R	130	14"	17.875"	340	80,000	1
	1505R1C5.5X	5R	150	14"	17.875"	390	80,000	1
	1706R1C5.5X	6R	170	14"	17.875"	500	80,000	1
	2009R1C5.5X	9R	200	14"	17.875"	760	80,000	1
	23012R1C5.5X	12R	230	14"	17.875"	1000	80,000	1
	39018R2C5.5X	18R	390	14"	17.875"	1500	80,000	2
	45024R2C5.5X	24R	450	14"	17.875"	1950	80,000	2
	55030R2C5.5X	30R	550	14"	17.875"	2400	80,000	2

R RATED	ORDERING/ CATALOG NUMBER	SIZE	MAXIMUM CONTINUOUS CURRENT @ 40 DEGREES C°	DIM. A (INCHES)	DIM. B (INCHES)	MINIMUM INTERRUPTING RATING RMS AMPS	MAXIMUM INTERRUPTING RATING RMS (ASYM)*	FIGURE NUMBER
8.25 KV	702R1C8.25	2R	70	12"	15.875"	190	80,000	1
	1003R1C8.25	3R	100	12"	15.875"	225	80,000	1
	1304R1C8.25	4R	130	12"	15.875"	330	80,000	1
	1505R1C8.25	5R	150	12"	15.875"	440	80,000	1
	1706R1C8.25	6R	170	12"	15.875"	500	80,000	1
	2009R1C8.25	9R	200	12"	15.875"	740	80,000	1
	23012R1C8.25	12R	230	12"	15.875"	955	80,000	1
	39018R2C8.25	18R	390	12"	15.875"	1440	80,000	2
	45024R2C8.25	24R	450	12"	15.875"	1910	80,000	2

* RMS Asymmetrical amperes = RMS Symmetrical amperes x 1.6

For hookeye attachment add "W" suffix to part number

E-RATED MEDIUM VOLTAGE FUSES

Current-Limiting

Description

E-rated fuses have time current characteristics designed to provide current-limiting protection for power transformers, potential transformers, power centers, feeder centers, and unit sub stations. When properly applied, they can protect against high and low fault currents.

NEMA Standards for E-rated medium voltage fuses require that fuses rated 100E or less open within 300 seconds (5 minutes) when subjected to an RMS value of 200-240% of the fuse continuous current rating; and fuses with an E rating larger than 100E must open within 600 seconds (10 minutes) when subjected to an RMS current of 220-240% of the fuse's continuous current rating. These values establish one point on the time-current curve.

Application Note

Since these fuses are used for the protection of general purpose circuits which may contain transformers, motors, and other equipment producing in-rush and/or overload currents, fuses should generally be rated at 140% of the normal full load current, and circuits should be analyzed to ensure that system load currents will not exceed the current rating of the fuse.

Characteristics

Voltage Ratings 2,750 V – 38,000 V
Current Range 10E – 600E

Options

- Hermetically sealed for use in hazardous locations (add "S" suffix to part number)
- Clip-lock (CL) and bolt-in styles available.

Dimensions

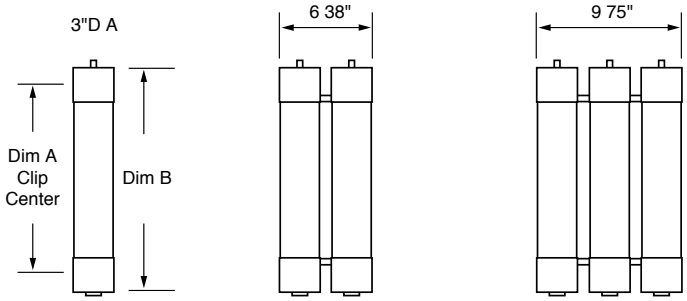

Figure 4 Figure 5 Figure 6

E-RATED	ORDERING/CATALOG NUMBER	SIZE	DIM. A (INCHES)	DIM. B (INCHES)	MAX INTERRUPTING RATING RMS (ASYM)*	FIGURE NUMBER
2.75 MAX. KV	10E1C2.75	10E	7"	10.875"	80,000	4
	15E1C2.75	15E	7"	10.875"	80,000	4
	20E1C2.75	20E	7"	10.875"	80,000	4
	25E1C2.75	25E	7"	10.875"	80,000	4
	30E1C2.75	30E	7"	10.875"	80,000	4
	40E1C2.75	40E	7"	10.875"	80,000	4
	50E1C2.75	50E	7"	10.875"	80,000	4
	65E1C2.75	65E	7"	10.875"	80,000	4
	80E1C2.75	80E	7"	10.875"	80,000	4
	100E-1C2.75	100E	7"	10.875"	80,000	4
	125E1C2.75	125E	7"	10.875"	80,000	4
	150E1C2.75	150E	7"	10.875"	80,000	4
	200E1C2.75	200E	7"	10.875"	80,000	4
	125E2C2.75	125E	7"	10.875"	80,000	5
	150E2C2.75	150E	7"	10.875"	80,000	5
	200E2C2.75	200E	7"	10.875"	80,000	5
	225E2C2.75	225E	7"	10.875"	80,000	5
	250E2C2.75	250E	7"	10.875"	80,000	5
	300E2C2.75	300E	7"	10.875"	80,000	5
	350E2C2.75	350E	7"	10.875"	80,000	5
	400E2C2.75	400E	7"	10.875"	80,000	5
	450E2C2.75	450E	7"	10.875"	80,000	5

* RMS Asymmetrical amperes = RMS Symmetrical amperes x 1.6

© 2012 Littelfuse POWR-GARD® Products Catalog

E-RATED MEDIUM VOLTAGE FUSES

Current-Limiting

E-RATED	ORDERING/CATALOG NUMBER	SIZE	DIM. A (INCHES)	DIM. B (INCHES)	MAX INTERRUPTING RATING RMS (ASYM)*	FIGURE NUMBER
5.5 MAX. KV	10E1C5.5	10E	12"	15.875"	80,000	4
	15E1C5.5	15E	12"	15.875"	80,000	4
	20E1C5.5	20E	12"	15.875"	80,000	4
	25E1C5.5	25E	12"	15.875"	80,000	4
	30E1C5.5	30E	12"	15.875"	80,000	4
	40E1C5.5	40E	12"	15.875"	80,000	4
	50E1C5.5	50E	12"	15.875"	80,000	4
	65E1C5.5	65E	12"	15.875"	80,000	4
	80E1C5.5	80E	12"	15.875"	80,000	4
	100E1C5.5	100E	12"	15.875"	80,000	4
	125E1C5.5	125E	12"	15.875"	80,000	4
	150E1C5.5	150E	12"	15.875"	80,000	4
	175E1C5.5	175E	12"	15.875"	80,000	4
	200E1C5.5	200E	12"	15.875"	80,000	4
	125E2C5.5	125E	12"	15.875"	80,000	5
	150E2C5.5	150E	12"	15.875"	80,000	5
	175E2C5.5	175E	12"	15.875"	80,000	5
	200E2C5.5	200E	12"	15.875"	80,000	5
	250E2C5.5	250E	12"	15.875"	80,000	5
	300E2C5.5	300E	12"	15.875"	80,000	5
	350E2C5.5	350E	12"	15.875"	80,000	5
	400E2C5.5	400E	12"	15.875"	80,000	5
	450E2C5.5	450E	12"	15.875"	80,000	5
	500E3C5.5	500E	12"	15.875"	80,000	6
	550E3C5.5	550E	12"	15.875"	80,000	6
	600E3C5.5	600E	12"	15.875"	80,000	6

E-RATED	ORDERING/CATALOG NUMBER	SIZE	DIM. A (INCHES)	DIM. B (INCHES)	MAX INTERRUPTING RATING RMS (ASYM)*	FIGURE NUMBER
5.5 MAX. KV	5NLE10E	10E	14"	17⅞"	80,000	4
	5NLE15E	15E	14"	17⅞"	80,000	4
	5NLE20E	20E	14"	17⅞"	80,000	4
	5NLE25E	25E	14"	17⅞"	80,000	4
	5NLE30E	30E	14"	17⅞"	80,000	4
	5NLE40E	40E	14"	17⅞"	80,000	4
	5NLE50E	50E	14"	17⅞"	80,000	4
	5NLE65E	65E	14"	17⅞"	80,000	4
	5NLE80E	80E	14"	17⅞"	80,000	4
	5NLE100E	100E	14"	17⅞"	80,000	4
	5NLE125E	125E	14"	17⅞"	80,000	4
	5NLE150E	150E	14"	17⅞"	80,000	4
	5NLE175E	175E	14"	17⅞"	80,000	4
	5NLE200E	200E	14"	17⅞"	80,000	4
	5NLE2225E	225E	14"	17⅞"	80,000	5
	5NLE2250E	250E	14"	17⅞"	80,000	5
	5NLE2300E	300E	14"	17⅞"	80,000	5
	5NLE2350E	350E	14"	17⅞"	80,000	5
	5NLE2400E	400E	14"	17⅞"	80,000	5
	5NLE2450E	450E	14"	17⅞"	80,000	5

* RMS Asymmetrical amperes = RMS Symmetrical amperes x 1.6

E-RATED MEDIUM VOLTAGE FUSES

Current-Limiting

E-RATED	ORDERING/CATALOG NUMBER	SIZE	DIM. A (INCHES)	DIM. B (INCHES)	MAX INTERRUPTING RATING RMS (ASYM)*	FIGURE NUMBER
8.25 MAX. KV	10E1C8.25	10E	12"	15⅞"	80,000,	4
	15E1C8.25	15E	12"	15⅞"	80,000	4
	20E1C8.25	20E	12"	15⅞"	80,000	4
	25E1C8.25	25E	12"	15⅞"	80,000	4
	30E1C8.25	30E	12"	15⅞"	80,000	4
	40E1C8.25	40E	12"	15⅞"	80,000	4
	50E1C8.25	50E	12"	15⅞"	80,000	4
	65E1C8.25	65E	12"	15⅞"	80,000	4
	80E1C8.25	80E	12"	15⅞"	80,000	4
	100E1C8.25	100E	12"	15⅞"	80,000	4
	125E1C8.25	125E	12"	15⅞"	80,000	4
	150E1C8.25	150E	12"	15⅞"	80,000	4
	125E2C8.25	125E	12"	15⅞"	80,000	5
	150E2C8.25	150E	12"	15⅞"	80,000	5
	200E2C8.25	200E	12"	15⅞"	80,000	5
	250E2C8.25	250E	12"	15⅞"	80,000	5
	300E2C8.25	300E	12"	15⅞"	80,000	5
	350E3C8.25	350E	12"	15⅞"	80,000	6
	400E3C8.25	400E	12"	15⅞"	80,000	6

E-RATED	ORDERING/CATALOG NUMBER	SIZE	DIM. A (INCHES)	DIM. B (INCHES)	MAX INTERRUPTING RATING RMS (ASYM)*	FIGURE NUMBER
8.25 MAX. KV	8NLE10E	10E	14"	17⅞"	80,000	4
	8NLE15E	15E	14"	17⅞"	80,000	4
	8NLE20E	20E	14"	17⅞"	80,000	4
	8NLE25E	25E	14"	17⅞"	80,000	4
	8NLE30E	30E	14"	17⅞"	80,000	4
	8NLE40E	40E	14"	17⅞"	80,000	4
	8NLE50E	50E	14"	17⅞"	80,000	4
	8NLE65E	65E	14"	17⅞"	80,000	4
	8NLE80E	80E	14"	17⅞"	80,000	4
	8NLE100E	100E	14"	17⅞"	80 000	4
	8NLE2100E	100E	14"	17⅞"	80,000	5
	8NLE2125E	125E	14"	17⅞"	80,000	5
	8NLE2150E	150E	14"	17⅞"	80,000	5
	8NLE2200E	200E	14"	17⅞"	80,000	5
	8NLE2250E	250E	14"	17⅞"	80,000	5

E-RATED	ORDERING/CATALOG NUMBER	SIZE	DIM. A (INCHES)	DIM. B (INCHES)	MAX INTERRUPTING RATING RMS (ASYM)*	FIGURE NUMBER
15.5 MAX. KV	10E1C15.5	10E	15"	18.875"	80,000	4
	15E1C15.5	15E	15"	18.875"	80,000	4
	20E1C15.5	20E	15"	18.875"	80,000	4
	25E1C15.5	25E	15"	18.875"	80,000	4
	30E1C15.5	30E	15"	18.875"	80,000	4
	40E1C15.5	40E	15"	18.875"	80,000	4
	50E1C15.5	50E	15"	18.875"	80,000	4
	65E1C15.5	65E	15"	18.875"	80,000	4
	80E1C15.5	80E	15"	18.875"	80,000	4
	100E1C15.5	100E	15"	18.875"	80,000	4
	65E2C15.5	65E	15"	18.875"	80,000	5
	80E2C15.5	80E	15"	18.875"	80,000	5
	100E2C15.5	100E	15"	18.875"	80,000	5
	125E2C15.5	125E	15"	18.875"	80,000	5
	150E2C15.5	150E	15"	18.875"	80,000	5
	175E2C15.5	175E	15"	18.875"	80,000	5
	200E2C15.5	200E	15"	18.875"	80,000	5
	200E3C15.5	200E	15"	18.875"	80,000	6
	250E3C15.5	250E	15"	18.875"	80,000	6
	300E3C15.5	300E	15"	18.875"	80,000	6

* RMS Asymmetrical amperes = RMS Symmetrical amperes x 1.6

© 2012 Littelfuse POWR-GARD® Products Catalog

E-RATED MEDIUM VOLTAGE FUSES

Current-Limiting

E-RATED	ORDERING/CATALOG NUMBER	SIZE	DIM. A (INCHES)	DIM. B (INCHES)	MAX INTERRUPTING RATING RMS (ASYM)*	FIGURE NUMBER
15.5 MAX. KV	15GSE65E	65E	18"	21⅞"	60,000	4
	15GSE80E	80E	18"	21⅞"	60,000	4
	15GSE100E	100E	18"	21⅞"	60,000	4
	15GSE2125E	125E	18"	21⅞"	60,000	5
	15GSE2150E	150E	18"	21⅞"	60,000	5
	15GSE2175E	175E	18"	21⅞"	60,000	5
	15GSE2200E	200E	18"	21⅞"	60,000	5

E-RATED	ORDERING/CATALOG NUMBER	SIZE	DIM. A (INCHES)	DIM. B (INCHES)	MAX INTERRUPTING RATING RMS (ASYM)*	FIGURE NUMBER
15.5 MAX. KV	15NLE10E	10E	20"	23⅞"	60,000	4
	15NLE15E	15E	20"	23⅞"	60,000	4
	15NLE20E	20E	20"	23⅞"	60,000	4
	15NLE25E	25E	20"	23⅞"	60,000	4
	15NLE30E	30E	20"	23⅞"	60,000	4
	15NLE40E	40E	20"	23⅞"	60,000	4
	15NLE50E	50E	20"	23⅞"	60,000	4
	15NLE65E	65E	20"	23⅞"	60,000	4
	15NLE80E	80E	20"	23⅞"	60,000	4
	15NLE100E	100E	20"	23⅞"	60,000	4
	15NLE280E	80E	20"	23⅞"	60,000	5
	15NLE2100E	100E	20"	23⅞"	60,000	5
	15NLE2125E	125E	20"	23⅞"	60,000	5
	15NLE2150E	150E	20"	23⅞"	60,000	5
	15NLE2175E	175E	20"	23⅞"	60,000	5
	15NLE2200E	200E	20"	23⅞"	60,000	5
	15NLE3150E	150E	20"	23⅞"	60,000	6
	15NLE3175E	175E	20"	23⅞"	60,000	6
	15NLE3250E	250E	20"	23⅞"	60,000	6
	15NLE3300E	300E	20"	23⅞"	60,000	6

E-RATED	ORDERING/CATALOG NUMBER	SIZE	DIM. A (INCHES)	DIM. B (INCHES)	MAX INTERRUPTING RATING RMS (ASYM)*	FIGURE NUMBER
25.8 MAX. KV	15E1C25.8	15E	21"	24⅝"	40,000	4
	20E1C25.8	20E	21"	24⅝"	40,000	4
	25E1C25.8	25E	21"	24⅝"	40,000	4
	30E1C25.8	30E	21"	24⅝"	40,000	4
	40E1C25.8	40E	21"	24⅝"	40,000	4
	50E1C25.8	50E	21"	24⅝"	40,000	4
	65E2C25.8	65E	21"	24⅝"	40,000	5
	80E2C25.8	80E	21"	24⅝"	40,000	5
	100E2C25.8	100E	21"	24⅝"	40,000	5

E-RATED	ORDERING/CATALOG NUMBER	SIZE	DIM. A (INCHES)	DIM. B (INCHES)	MAX INTERRUPTING RATING RMS (ASYM)*	FIGURE NUMBER
38 MAX. KV	3E1C38.0	3E	27"	30⅝"	20,000	4
	7E1C38.0	7E	27"	30⅝"	20,000	4
	10E1C38.0	10E	27"	30⅝"	20,000	4
	15E1C38.0	15E	27"	30⅝"	20,000	4
	20E1C38.0	20E	27"	30⅝"	20,000	4
	25E1C38.0	25E	27"	30⅝"	20,000	4
	30E1C38.0	30E	27"	30⅝"	20,000	4
	40E1C38.0	40E	27"	30⅝"	20,000	4
	50E2C38.0	50E	27"	30⅝"	20,000	5
	65E2C38.0	65E	27"	30⅝"	20,000	5
	80E2C38.0	80E	27"	30⅝"	20,000	5

* RMS Asymmetrical amperes = RMS Symmetrical amperes x 1.6

E-RATED MEDIUM VOLTAGE FUSES

Current-Limiting

Clip Lock Design

The clip lock type designs ensures a positive contact between the fuse and the connection cam. The fuse's clip lock tab slides in between the clip casting and the cam to prevent the fuse from slipping or blowing out of the holder. This positive contact improves heat dissipation and allows fuses to run cooler.

Dimensions in inches

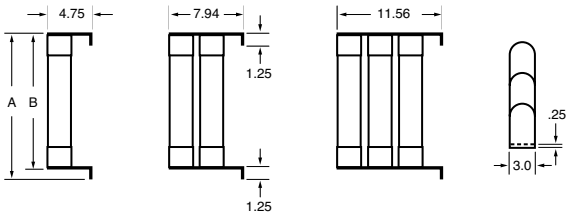

Figure 7 **Figure 8** **Figure 9**

E-RATED	ORDERING/CATALOG NUMBER	SIZE	DIM. A (INCHES)	DIM. B (INCHES)	MAX INTERRUPTING RATING RMS (ASYM)*	FIGURE NUMBER
5.5 MAX. KV CLIP LOCK	10E1CL5.5	10E	16.38"	15.13"	80,000	7
	15E1CL5.5	15E	16.38"	15.13"	80,000	7
	20E1C5.5	20E	16.38"	15.13"	80,000	7
	25E1CL5.5	25E	16.38"	15.13"	80,000	7
	30E1CL5.5	30E	16.38"	15.13"	80,000	7
	40E1CL5.5	40E	16.38"	15.13"	80,000	7
	50E1CL5.5	50E	16.38"	15.13"	80,000	7
	65E1CL5.5	65E	16.38"	15.13"	80,000	7
	80E1CL5.5	80E	16.38"	15.13"	80,000	7
	100E1CL5.5	100E	16.38"	15.13"	80,000	7
	125E1CL5.5	125E	16.38"	15.13"	80,000	7
	150E1CL5.5	150E	16.38"	15.13"	80 000	7
	225E2CL5.5	225E	17.38"	16.13"	80,000	8
	250E2CL5.5	250E	17.38"	16.13"	80,000	8
	300E2CL5.5	300E	17.38"	16.13"	80,000	8
	350E2CL5.5	350E	17.38"	16.13"	80,000	8
	400E2CL5.5	400E	17.38"	16.13"	80,000	8
	450E2CL5.5	450E	17.38"	16.13"	80,000	8
	500E3CL5.5	500E	17.38"	16.13"	80,000	9
	550E3CL5.5	550E	17.38"	16.13"	80,000	9
	600E3CL5.5	600E	17.38"	16.13"	80,000	9

E-RATED	ORDERING/CATALOG NUMBER	SIZE	DIM. A (INCHES)	DIM. B (INCHES)	MAX INTERRUPTING RATING RMS (ASYM)*	FIGURE NUMBER
8.25 MAX. KV CLIP LOCK	10E1CL8.25	10E	17.38"	16.13"	80,000	7
	15E1CL8.25	15E	17.38"	16.13"	80,000	7
	20E1C8.25	20E	17.38"	16.13"	80,000	7
	25E1CL8.25	25E	17.38"	16.13"	80,000	7
	30E1CL8.25	30E	17.38"	16.13"	80,000	7
	40E1CL8.25	40E	17.38"	16.13"	80,000	7
	50E1CL8.25	50E	17.38"	16.13"	80,000	7
	65E1CL8.25	65E	17.38"	16.13"	80,000	7
	80E1CL8.25	80E	17.38"	16.13"	80,000	7
	100E1CL8.25	100E	17.38"	16.13"	80 000	7
	125E2CL8.25	125E	17.38"	16.13"	80,000	8
	150E2CL8.25	150E	17.38"	16.13"	80,000	8
	175E2CL8.25	175E	17.38"	16.13"	80,000	8
	200E2CL8.25	200E	17.38"	16.13"	80,000	8
	225E2CL8.25	225E	17.38"	16.13"	80,000	8
	250E2CL8.25	250E	17.38"	16.13"	80,000	8
	300E2CL8.25	300E	17.38"	16.13"	80 000	8
	350E3CL8.25	350E	17.38"	16.13"	80,000	9

E-RATED	ORDERING/CATALOG NUMBER	SIZE	DIM. A (INCHES)	DIM. B (INCHES)	MAX INTERRUPTING RATING RMS (ASYM)*	FIGURE NUMBER
15.5 MAX. KV CLIP LOCK	10E1CL15.5	10E	19.8"	18.1"	60,000	7
	15E1CL15.5	15E	19.8"	18.1"	60,000	7
	20E1CL15.5	20E	19.8"	18.1"	60,000	7
	25E1CL15.5	25E	19.8"	18.1"	60,000	7
	30E1CL15.5	30E	19.8"	18.1"	60,000	7
	40E1CL15.5	40E	19.8"	18.1"	60,000	7
	50E1CL15.5	50E	19.8"	18.1"	60 000	7
	65E1CL15.5	65E	22.81"	21.13"	60,000	7
	80E1CL15.5	80E	22.81"	21.13"	60,000	7
	100E1CL15.5	100E	22.81"	21.13"	60 000	7
	125E2CL15.5	125E	22.81"	19.1"	60,000	8
	150E2CL15.5	150E	22.81"	19.1"	60,000	8
	175E2CL15.5	175E	22.81"	19.1"	60,000	8
	200E2CL15.5	200E	22.81"	19.1"	60 000	8
	150E3CL15.5	150E	22.81"	19.1"	60,000	9
	200E3CL15.5	200E	22.81"	19.1"	60,000	9
	250E3CL15.5	250E	22.81"	19.1"	60,000	9
	300E3CL15.5	300E	22.81"	19.1"	60,000	9

* RMS Asymmetrical amperes = RMS Symmetrical amperes x 1.6

© 2012 Littelfuse POWR-GARD® Products Catalog

E-RATED POTENTIAL TRANSFORMER FUSES

Current-Limiting

Description

Potential Transformer (PT) fuses are current-limiting fuses with high interrupting ratings designed for the protection of potential transformers.

Application Note

When applying fuses for the protection of transformers, the magnetizing current in-rush must be considered. The characteristics of the in-rush, which can be matched with a fuse time-current curve, should be available from the transformer manufacturer.

Characteristics

Voltage Ratings 625 VAC – 25,800 VAC
Current Range 1/2E – 10E

Dimensions

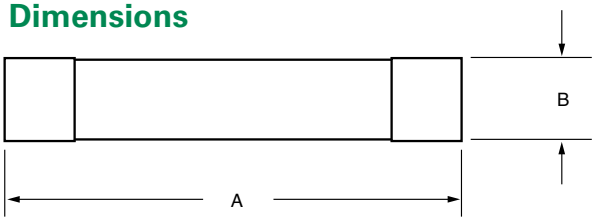

E-RATED	ORDERING/CATALOG NUMBER	SIZE	LENGTH DIM. A (INCHES)	DIAMETER DIM. B (INCHES)	MAX INTERRUPTING RATING RMS (ASYM)*
625 VOLT	3E4PT.6	3E	4.6″	0.8125″	37,500
	5E4PT.6	5E	4.6″	0.8125″	37,500
	7E4PT.6	7E	4.6″	0.8125″	37,500
	10E4PT.6	10E	4.6″	0.8125″	37,500
2.75 MAX. KV	500E4PT2.4	1/2E	4.6″	0.8125″	37,500
	1E4PT2.4	1E	4.6″	0.8125″	37,500
	2E4PT2.4	2E	4.6″	0.8125″	37,500
2.75 MAX. KV	1E6PT2.75	1E	7.4″	1.5625″	37,500
	2E6PT2.75	2E	7.4″	1.5625″	37,500
	3E6PT2.75	3E	7.4″	1.5625″	37,500
	1E8PT2.75	1E	9.5″	1.5625″	37,500
	2E8PT2.75	2E	9.5″	1.5625″	37,500
	3E8PT2.75	3E	9.5″	1.5625″	37,500
4.8 MAX. KV	1E5PT4.8	1E	5.6″	0.8125″	50,000
	2E5PT4.8	2E	5.6″	0.8125″	50,000
5.5 MAX. KV	500E6PT5.5	1/2E	7.4″	1.5625″	50,000
	1E6PT5.5	1E	7.4″	1.5625″	50,000
	2E6PT5.5	2E	7.4″	1.5625″	50,000
	3E6PT5.5	3E	7.4″	1.5625″	50,000
	5E6PT5.5	5E	7.4″	1.5625″	50,000
	500E8PT5.5	1/2E	9.5″	1.5625″	50,000
	1E8PT5.5	1E	9.5″	1.5625″	50,000
	2E8PT5.5	2E	9.5″	1.5625″	50,000
	3E8PT5.5	3E	9.5″	1.5625″	50,000
	5E8PT5.5	5E	9.5″	1.5625″	50,000
	10E8PT5.5	10E	9.5″	1.5625″	50,000
8.25 MAX. KV	500E8PT8.25	1/2E	9.5″	1.5625″	50,000
	1E8PT8.25	1E	9.5″	1.5625″	50,000
	2E8PT8.25	2E	9.5″	1.5625″	50,000
	3E8PT8.25	3	9.5″	1.5625″	50,000
15.5 MAX. KV	500E11PT15.5	1/2E	12.8″	1.5625″	35,000
	1E11PT15.5	1E	12.8″	1.5625″	35,000
	2E11PT15.5	2E	12.8″	1.5625″	35,000
	3E11PT15.5	3E	12.8″	1.5625″	35,000
	3E16PT15.5	3E	17.5″	1.5625″	35,000
	5E16PT15.5	5E	17.5″	1.5625″	35,000
25.8 MAX. KV	500E16PT25.5	1/2E	17.5″	1.5625″	32,000
	1E16PT25.5	1E	17.5″	1.5625″	32,000

* RMS Asymmetrical amperes = RMS Symmetrical amperes x 1.6

LIVE PARTS

Description

Live parts are available for mounting E, R, and PT single, double, and triple barrel fuses. Mounting clips are available for ferrule type and clip lock style fuses. All clips are sold in pairs.

Part Number 700-156

Ordering Number 0700156.Z

For use with 1 9/16" to 1 5/8" (1.625") diameter PT fuses.

Dimensions in inches

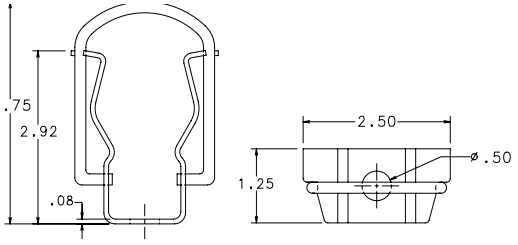

Part Number 700-300

Ordering Number 0700300.Z

For use with 3" diameter fuses.

Dimensions in inches

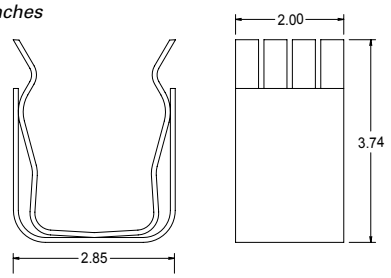

Part Number 700-500

Ordering Number 0700500.Z

For use with all 13/16" (.8125") diameter PT fuses

Dimensions in inches

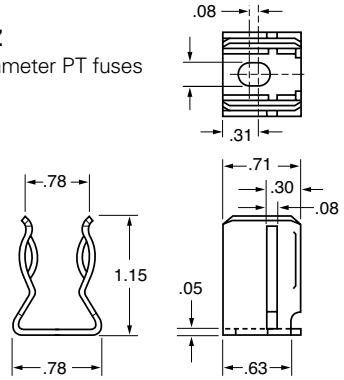

Part Number 700-530

Ordering Number 0700530.Z

For use with all 3" diameter fuses.

Dimensions in inches

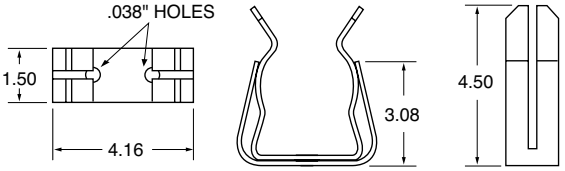

Part Number 700-520-CL

Ordering Number 0700520.ZXCL

Clip Lock Design

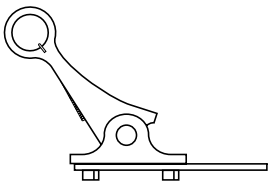

Dimensions for reference only.

Mounting Details for Clip Lock *Dimensions in inches*

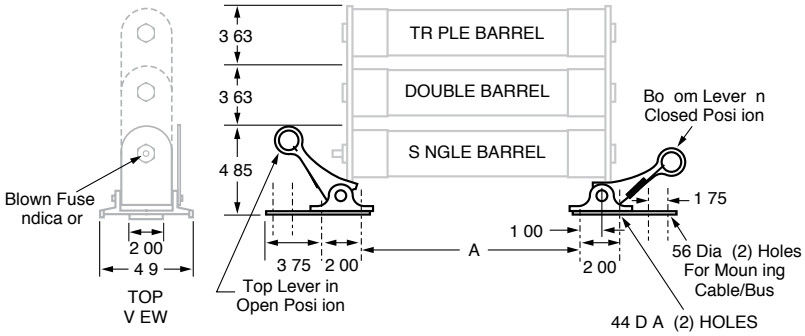

© 2012 Littelfuse POWR-GARD® Products Catalog

Section Overview

Rely on Littelfuse for short circuit protection of telecommunications circuits and sensitive DC power distribution circuits.

TELECOM PRODUCTS

Table of Contents

L17T Series Telecommunications Power Fuse 52

TLN Series Telecommunications Power Fuse 53

TLS Series Telecommunications Power Fuse 54

Alarm Indicating Fuses 55

LTFD 101 Series Telecommunications Disconnect Switch 56

L17T SERIES TELCOM POWER FUSE

170 VDC • Current-Limiting • 70-1200 A

Description

Specifically designed for short-circuit protection of telecommunications circuits, the Littelfuse L17T series fuses provide reliable protection of sensitive DC power distribution systems. Constructed with silver plated elements for low I^2t and peak let-through, these advanced fuses virtually eliminate equipment damage due to surges and spikes. The L17T series fuse unique element geometry also provides cooler running temperatures, helping to minimize heat within enclosures.

Features

- Low I^2t
- Extremely current-limiting
- Low operating temperature
- 170 VDC rating

Specifications

Voltage Rating	170 VDC
Interrupting Rating	100 kA
Ampere Range	70 – 1200 A
Approvals	UL Recognized (File No. E71611) CSA Recognized (File No. LR29862)

Ordering Information

AMPERE RATINGS						
70	125	200	300	450	800	1100
90	150	225	350	500	900	1200
100	175	250	400	600	1000	—

SERIES	VOLTAGE	AMPERAGE	CATALOG NUMBER	ORDERING NUMBER
L17T	170	1200	L17T 1200	L17T1200V

Dimensions in inches (mm)

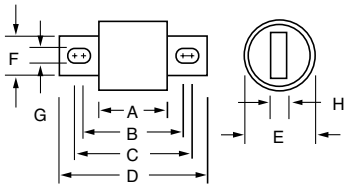

AMPERE RATING	DIMENSIONS INCHES (mm)							
	A	B	C	D	E	F	G	H
70 – 250	1 5/32 (29.4)	1 7/8 (47.6)	2 3/16 (55.6)	2 21/32 (67.5)	1 (25.4)	7/8 (22.2)	5/16 (7.9)	3/16 (4.8)
300 – 800	1 1/4 (31.8)	1 15/16 (49.2)	2 9/16 (65.1)	3 1/2 (88.9)	1 1/2 (38.1)	1 (25.4)	13/32 (10.3)	1/4 (6.35)
900–1200	1 11/32 (34.0)	—	—	4 1/16 (103.1)	—	1 1/2 (38.1)	—	1/4 (6.35)

Web Resources

For additional information, visit:
www.littelfuse.com/l17t

Recommended Fuse Holders

LTFD 6001 and LTFD 1200 series, visit:
www.littelfuse.com/ltfd

© 2012 Littelfuse POWR-GARD® Products Catalog

Littelfuse®
Expertise Applied | Answers Delivered

TLN SERIES TELCOM POWER FUSE

170 VDC • Current-Limiting • 1-600 A

Specifications

Voltage Rating	170 VDC
Interrupting Rating	100 kA
Ampere Range	1 – 600 A
Approvals	UL Recognized (File No. E71611)

Ordering Information

AMPERE RATINGS						
1	15	40	80	150	300	600
3	20	45	90	175	350	—
5	25	50	100	200	400	—
6	30	60	110	225	450	—
10	35	70	125	250	500	—

SERIES	VOLTAGE	AMPERAGE	CATALOG NUMBER	ORDERING NUMBER
TLN	170VDC	6	TLN006	0TLN006.T

Replaces competitors' TPN and TGN Series.

Description

The TLN Series fuses are specifically designed for the protection of telecommunications DC power distribution circuits.

Features

- 170 VDC rating
- Fast-acting and current-limiting
- 1 to 600 amperes rating
- Dimensionally similar to 250 V Class R fuses

Web Resources

For additional information, visit:
www.littelfuse.com/tln

Recommended Fuse Holders

LFR25 Series 86

Dimensions Inches (mm)

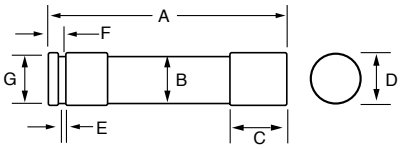

FG 1

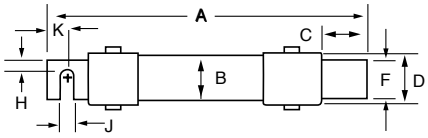

FG 2

Figure 1

AMPERE RATING	DIMENSIONS INCHES (mm)									
	A	B	C	D	E	F	G	H	J	K
1 – 30	2 (50.8)	½ (12.7)	½ (12.7)	9/16 (14.3)	5/64 (2.0)	5/32 (4.0)	3/8 (9.5)	—	—	—
35 – 60	3 (76.2)	¾ (19.1)	5/8 (15.9)	13/16 (20.6)	3/32 (2.4)	3/16 (4.8)	5/8 (15.9)	—	—	—

Figure 2

AMPERE RATING	DIMENSIONS INCHES (mm)									
	A	B	C	D	E	F	G	H	J	K
70 – 100	5 7/8 (149.2)	1 (25.4)	1 1/16 (27.0)	1 1/16 (27.0)	1/8 (3.2)	3/4 (19.1)	1 1/4 (31.6)	1/4 (6.4)	9/32 (7.1)	½ (12.7)
110 – 200	7 1/8 (181.0)	1½ (38.1)	1 15/32 (37.3)	1 19/32 (40.5)	3/16 (4.8)	1 1/8 (28.6)	1 27/32 (46.8)	7/16 (11.1)	9/32 (7.1)	11/16 (17.5)
225 – 400	8 5/8 (219.1)	2 (50.8)	1 15/16 (49.2)	2 3/32 (53.2)	1/4 (6.4)	1 5/8 (41.3)	2 11/32 (59.5)	5/8 (15.9)	13/32 (10.3)	15/16 (23.8)
450 – 600	10 3/8 (263.5)	2½ (63.5)	2 3/8 (60.3)	2 19/32 (65.9)	1/4 (6.4)	2 (50.8)	2 27/32 (72.2)	3/4 (19.1)	17/32 (13.5)	1 1/8 (28.6)

TLS SERIES TELCOM POWER FUSE

170 VDC • Current-Limiting • 1-125 A

Description

Littelfuse TLS Series fuses are designed specifically for the protection of telecommunications equipment. TLS fuses have been engineered to operate up to 170 VDC to provide current-limiting short-circuit protection for cables and components found in the DC power distribution circuits of telecommunications systems. The compact design and multiple mounting configurations of the TLS series allow it to be used in a variety of applications.

Features

- 170 VDC rating
- Current-limiting
- 1 to 125 amperes rating
- Multiple mounting configurations
- RoHS Compliant

Specifications

Voltage Rating	170 VDC
Interrupting Rating	100 kA
Ampere Range	1 – 125 A
Approvals	UL Recognized (File No. E71611)
Construction	Body: Glass melamine Caps: Silver-plated brass
Environmental	RoHS Compliant, Lead (Pb) Free

Ordering Information

AMPERE RATINGS				
1	6	25	50	90
2	10	30	60	100
3	15	35	70	110*
5	20	40	80	125*

*Available in cartridge only.

Note: To order leaded versions of TLS fuses, add suffix V, L, LB, or LS to part number.

SERIES	VOLTAGE	AMPERAGE	CATALOG NUMBER	ORDERING NUMBER
TLS	170VDC	6	TLS006V	0TLS006.TXV

Replaces competitors' TPS and TGS Series.

Web Resources

For additional information, visit:
www.littelfuse.com/tls

Recommended Fuse Holders

LTFD series disconnect switches 56
LFT30060 for TLS series cartridge style fuse 92
Contact factory for more information.

Contact Littelfuse for characteristic curves.
Dimensions for reference only.

Dimensions Inches (mm)

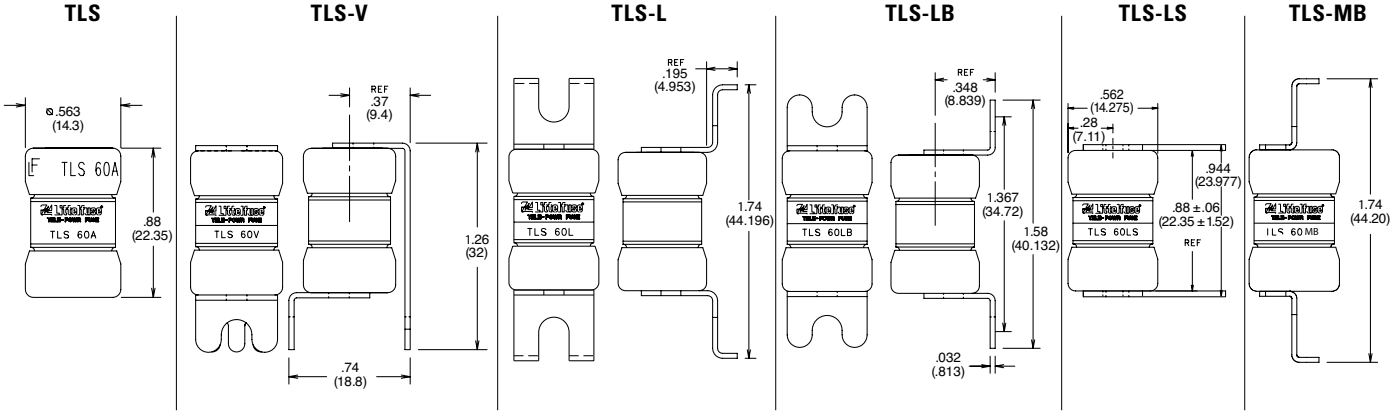

© 2012 Littelfuse POWR-GARD® Products Catalog

TELCOM POWER FUSES

Alarm Indicating Fuses

70 Series Alarm Indicating Fuses

Description

The 70 Series alarm indicating fuses are designed for use in telecommunications equipment. A color coded tip provides visual identification of the ampere rating and the fuse status.

Features

- Color coded tip
- Rated 125 VAC, 300 VDC

Specifications

Voltage Ratings	125 VAC 300 VDC
Interrupting Ratings	1,000 A @ 125 VAC 1,000 A @ 300 VDC

Ordering Information

AMPERE RATINGS				
100 mA	200 mA	500 mA	2	5
150 mA	250 mA	750 mA	3	8
180 mA	350 mA	1.33	3.5	10

10 MINUTE RATING	CATALOG NUMBER	ORDERING NUMBER	COLOR CODE
100 mA	70P	70P00000Z	GREY/WHITE
150 mA	70R	70R00000Z	RED/WHITE
180 mA	70E	70E00000Z	YELLOW
200 mA	70X	70X00000Z	BLACK
250 mA	70F	70F00000Z	VIOLET
250 mA	70K	70K00000Z	VIOLET/WHITE
350 mA	70S	70S00000Z	GRAY
500 mA	70G	70G00000Z	RED
750 mA	70H	70H00000Z	BROWN
1.33 A	70A	70A00000Z	WHITE
2 A	70B	70B00000Z	ORANGE
3 A	70C	70C00000Z	BLUE
3.5 A	70J	70J00000Z	BLACK/WHITE
5 A	70D	70D00000Z	GREEN/BLACK
8 A	70M	70M00000Z	TAN/WHITE
10 A	70N	70N00000Z	YELLOW/PURPLE

Web Resources

For additional information, visit:
www.littelfuse.com/70

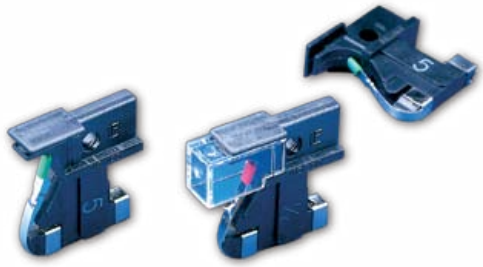

481 Series Alarm Indicating Fuses

Description

For telecommunications equipment and similar applications. Color coded indicator flags indicate ampere rating. Body is constructed of black polyphenylene sulfide with UL94-V0 flammability rating, contacts are of bright alloy-plated beryllium copper. Available with or without protective lens.

Specifications

Voltage Rating	125 VAC/DC
Approvals	UL Recognized CSA Recognized

Ordering Information

AMPERE RATINGS						
18/100	3/8	3/4	1 1/2	3	5	12
1/5	1/2	1	2	3 1/2	7 1/2	15
1/4	65/100	1/3	1/2	4	10	20

SERIES	VOLTAGE	AMPERAGE	CATALOG NUMBER	ORDERING NUMBER
481	125 AC/DC	2	481002L	0481002.VXL

Note: For 481 Dummy fuse, order 481000.

Recommended Fuse Holders

482 Series, see website: **www.littelfuse.com/482**
Available 1-20 pole with PCB or panel mounting.
To order with protective lens add suffix XL.

Web Resources

For additional information, visit:
www.littelfuse.com/481

LTFD 101 SERIES TELCOM DISCONNECT SWITCH

80 VDC • 1-125 A

Specifications

Voltage Rating	80 VDC
Ampere Range	1 – 125 A
Approvals	UL Recognized (File No. E122674)

Recommended Fuses

Littelfuse TLS Series fuses 54

Ordering Information

SERIES	AMPERAGE	CATALOG NUMBER	ORDERING NUMBER	TERMINAL TYPE
LTFD	125 A MAX	LTFD101-1	LTFD0101ZX1	BULLET
LTFD	125 A MAX	LTFD101-2	LTFD0101ZX2	SCREW
LTFD	125 A MAX	LTFD101-3	LTFD0101ZX3	STUD
LTFD	70 A MAX	LTFD101-4	LTFD0101ZX4	CLIP

Web Resources

For additional information, visit:
www.littelfuse.com/ltfd101

Description

Littelfuse compact LTFD 101 fuse holders for TLS fuses are designed for quick installation into telecom equipment panels. Their modular design fits into spaces originally designed for circuit breakers and can be front panel mounted or rear mounted using bullet connectors. The innovative new pull-out design eliminates the need for tools to replace fuses and includes an alarm signaling circuit to identify the blown fuse.

Features

- Extremely compact
- Quick mounting
- Replaces circuit breakers
- Includes alarm signaling circuit

Dimensions Inches (mm)

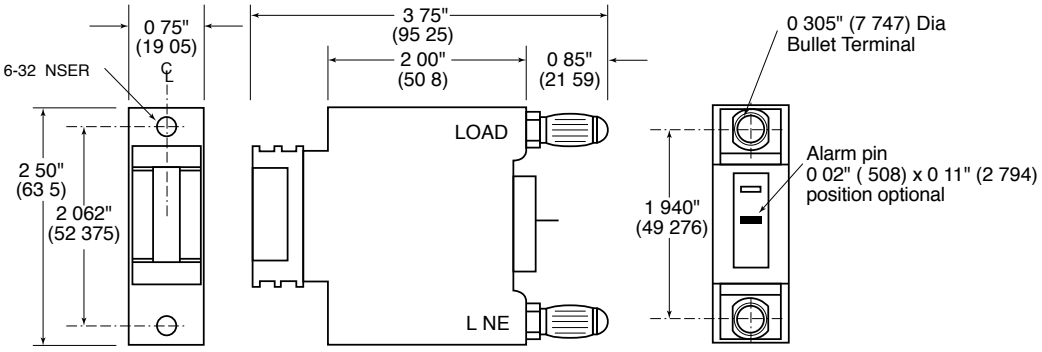

Dimensions for reference only. For additional options and dimensions, contact the factory.

© 2012 Littelfuse POWR-GARD® Products Catalog

Section Overview

Whether you are protecting solar equipment or finding a replacement fuse for an aging HVAC unit, Littelfuse carries the breadth of fuses to meet your needs. Our "special purpose" fuse section includes application-specific products to meet all of your application needs.

SPECIAL PURPOSE FUSES

Table of Contents

Solar Rated Products Overview 58

Solar Rated Fuses 60

Forklift / Stud Mounted Fuses 62

Plug Fuses 63

MEGA® Bolt-Down Fuses 63

In-Line Fuses And Holder 64

Cable Limiters 65

L Series (Traditional) Semiconductor Fuses 66

LA Series (Alternate Dimension) Semiconductor Fuses 68

Square Body Semiconductor Fuses 74

OEM Custom Products 79

Circuit-Protection Products for Photovoltaic Applications

With over 14 million devices installed in photovoltaic power systems, Littelfuse understands the technical challenges of the solar market. Littelfuse offers numerous circuit-protection products that are uniquely suited to protect the equipment and systems subject to the harsh environments of photovoltaic installations. Items listed within this catalog, and even newer products and information available online, represent over 80 years of Littelfuse technical expertise and manufacturing excellence.

Download our full-line Solar Products Catalog

For more information on our complete line of Solar-Rated Protection Products or to download our solar catalog, contact us at:

www.littelfuse.com/solar

800-TEC-FUSE

1500 VDC HIGH POWER LAB

COMPREHENSIVE TEST DATA

GLOBAL MARKET CAPABILITIES

EXPERIENCED SOLAR ENGINEERING TEAM

PARTNERED WITH MARKET LEADERS

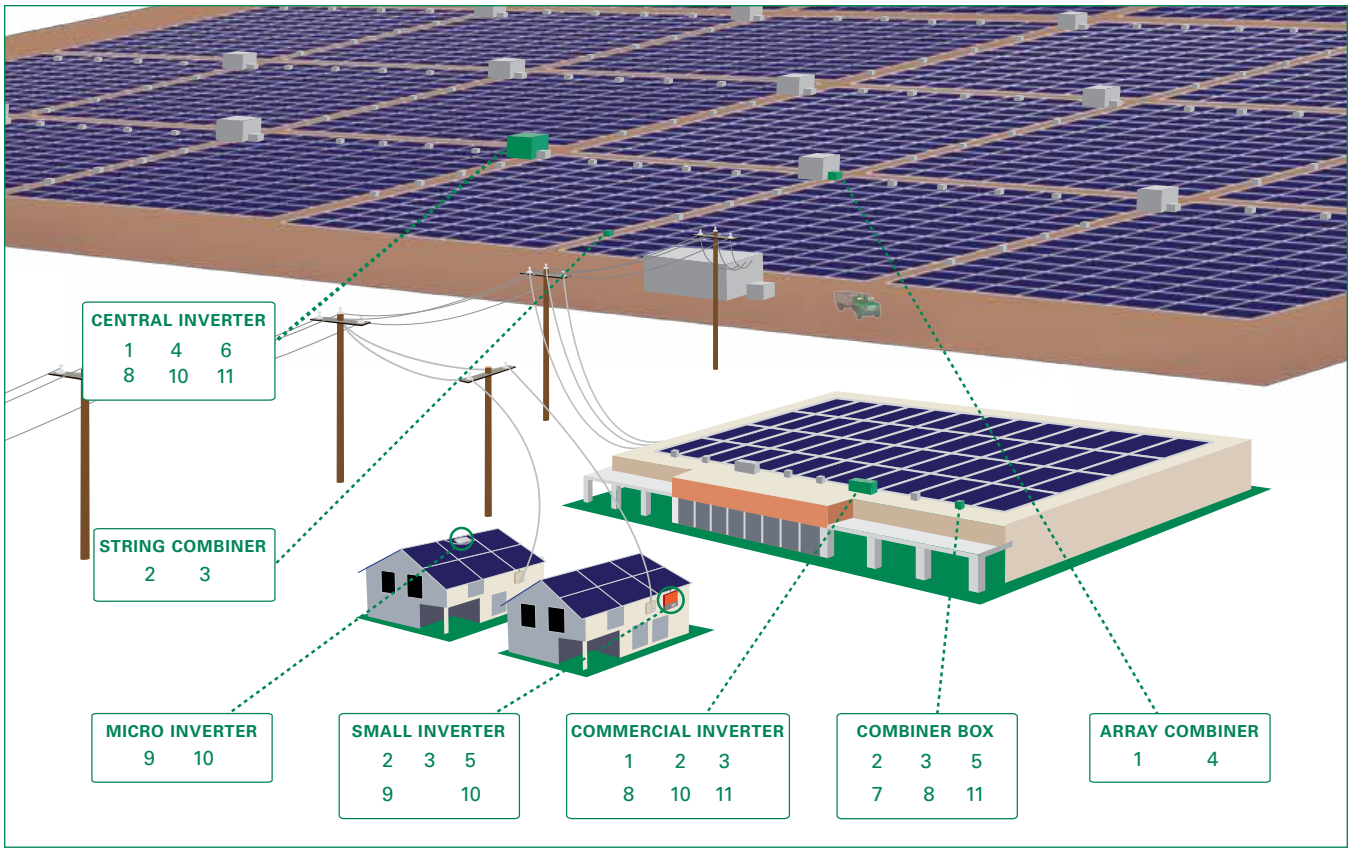

INNOVATIVE SOLAR SOLUTIONS

1. SPFJ Solar Fuses.....61
   - 1000 VDC
   - 125-450 A
   - UL Class J Size

2. SPF Solar Fuses 60
   - 1000 VDC
   - Up to 30 A
   - 10x38mm

3. LPSM & LPHV Fuse Holders..... 108
   - 600 & 1000 VDC
   - Accepts 10x38mm fuses up to 30 A
   - DIN-rail mountable

4. LDC & IDSR Fuses.....11, 17
   - LDC - Up to 2000 A
   - IDSR - Up to 600 A

5. KLKD Solar Fuses 32
   - 600 VDC
   - Up to 30 A
   - 10x38mm

6. SE-601 Ground-Fault Relay 152
   - For ungrounded systems
   - Trip settings from 1-20 mA
   - 5 mS - 2.52 S trip delay

7. LPSM Busbar.....110
   - 600 VDC
   - Accepts 10x38mm fuses up to 30 A
   - 200 A cross section current

8. Up-LINK™ Fuse Holder..... 107
   - 600 VDC
   - Accepts 10x38mm fuses up to 30 A
   - DIN-rail mountable

9. TVS Diodes 177
   - Up to 3,500 VDC
   - 10,000 A maximum energy

10. Varistor Products 177
    - Up to 9,000 A maximum energy
    - -55° C to +85° C

11. Power Distribution Blocks..... 122
    - Multiple-wire rated terminals
    - Connectors in copper or aluminum

SPF SERIES SOLAR FUSES

1000 VDC • 1-30 A

Description

The SPF Solar Protection Fuse series has been specifically designed for the protection of photovoltaic (PV) systems. This family of Midget style fuses (10 x 38 mm) can safely protect PV modules and conductors from reverse-overcurrent conditions.

As PV systems have grown in size, so have the corresponding voltage requirements. This increase in system voltage has typically been intended to minimize power loss associated with long conductor runs. Standard circuit protection devices are not designed to completely protect photovoltaic panels. However, the SPF series is UL Listed to safely interrupt faulted circuits up to this demanding voltage level.

Littelfuse offers 13 ampere ratings to match specific requirements in a variety of applications.

Features/Benefits

- Meets UL, IEC and VDE photovoltaic standards
- UL 2579 Listed 1000 VDC maximum
- 1-30 A ratings available
- 20,000 A Interrupting Rating
- Both PCB mount and dead-front holder options available

Applications

- Combiner boxes
- Inverters
- Battery charge controllers

Recommended Fuse Holders

LPHV Series..... 109
LFPHV Indication Series 112

Specifications

Voltage Rating	1000 VDC
Amperage Rating	1, 2, 3, 4, 5, 6, 8, 10, 12, 15, 20, 25, 30
Max. Interrupting Rating	20 kA; Time Constant less than 2ms
Min. Interrupting Rating	1.35x Current Rating
Material	Body: Melamine Caps: Copper Alloy
Operating Temperature	See Rerating Curve
Approvals	UL 2579 Listed (File: E339112) IEC 60269-6 (1-25 A) VDE Approved (No. 40033098)
Environmental	RoHS Compliant
Country of Origin	Mexico

Ordering Information

AMPERAGE	CATALOG NUMBER	ORDERING NUMBER
2	SPF002	SPF002.T
8	SPF008	SPF008.T
30	SPF030	SPF030.T
30 (WITH PCB TABS)	SPF030R	SPF030.HXR

Web Resources

Downloadable CAD drawings and other technical information: **www.littelfuse.com/spf**

Dimensions Inches (mm)

Ferrule Version **PCB Version**

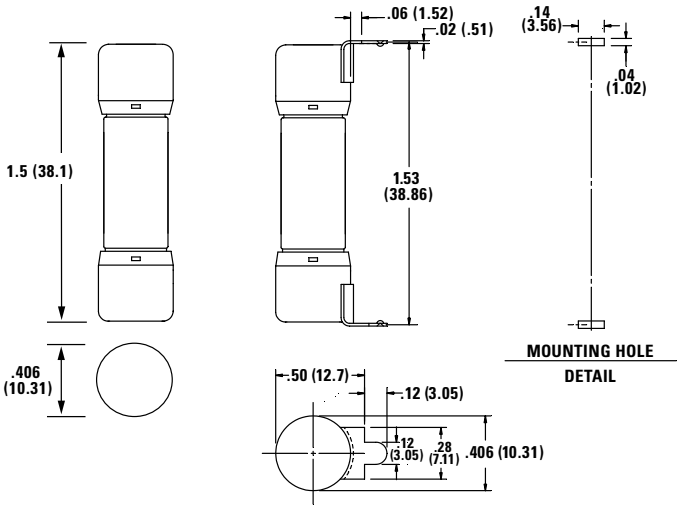

Look for this logo to indicate products that are used in solar applications. Visit our website **www.littelfuse.com/solar** for the latest updates on approvals, certifications, and new products.

© 2012 Littelfuse POWR-GARD® Products Catalog

Littelfuse®
Expertise Applied | Answers Delivered

SPFJ SERIES SOLAR FUSES

1000 VDC • 125-450 A

Description

The SPFJ series is the smallest 1000 VDC 125-450 A photovoltaic fuse available in the market. The SPFJ series is manufactured in Class J case sizes that allows for both fuse holder and busbar mounting configuration. The SPFJ meets both UL and IEC requirements.

Features/Benefits

- Meets UL, IEC and VDE photovoltaic standards
- Small footprint reduces panel size
- Full-range PV time-current characteristic
- Flexibility of fuse holder or busbar mounting
- Higher amperage solar fuses in standard sizes
- UL Listed Class J branch and feeder circuit rated

Applications

- Inverters
- Re-combiner boxes

Recommended Fuse Holders

LFJ 1000VDC.....104

Web Resources

Downloadable CAD drawings and other technical information: **www.littelfuse.com/spfJ**

Specifications

Voltage Ratings	1000 VDC 600 VAC
Interrupting Rating	AC: 200 kAIC DC: 125-200 A: 20 kAIC 250-400 A: 10 kAIC 450 A: 20 kAIC
Amperage	125, 160, 200, 250, 300, 350, 400, 450
Approvals	UL 2579 Listed (File: E339112) UL 248-8, Class J (except 125, 160, 200 A) C UL (except 125, 160, 200 A) IEC 60269-6 VDE Approved (No. 40033659, 40033630, 40033661)
Material	Body: Melamine End Bells: Copper Alloy
Environmental	RoHS Compliant
Country of Origin	Mexico

Ordering Information

CATALOG NUMBER	ORDERING NUMBER	AMPERAGE
SPFJ 125	SPFJ125.X	125
SPFJ 160	SPFJ160.X	160
SPFJ 200	SPFJ200.X	200
SPFJ 250	SPFJ250.X	250
SPFJ 300	SPFJ300.X	300
SPFJ 350	SPFJ350.X	350
SPFJ 400	SPFJ400.X	400
SPFJ 450	SPFJ450.X	450

* 70-100 Amp models in 200 Amp Case size soon to be released. Visit www.littelfuse.com/spfj for details

Dimensions

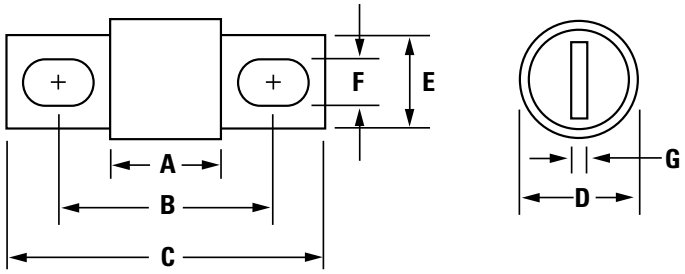

AMPERAGE	DIMENSIONS INCHES (MM)						
	A	B	C	D	E	F	G
125-200	3 (76.2)	4 11/32 (110.19)	5 21/32 (144.02)	1 1/2 (38.1)	1 1/8 (28.6)	9/32 (7.1)	3/16 (4.8)
250-400	3 3/8 (85.7)	5 1/4 (133.35)	7 1/8 (181.0)	2 (50.8)	1 5/8 (41.3)	13/32 (10.3)	1/4 (6.4)
450	3 3/4 (95.3)	5.98 (151.99)	8 (203.2)	2 1/2 (63.5)	2 (50.8)	17/32 (13.5)	3/8 (9.5)

SOLAR-RATED

Look for this logo to indicate products that are used in solar applications. Visit our website **www.littelfuse.com/solar** for the latest updates on approvals, certifications, and new products.

FORK-LIFT STUD-MOUNTED FUSES

48/80 VDC • Fast-Acting and Very Fast-Acting • 35-800 A

CNN, CNN_E & CNL Limiter Fuses

Description

CNN_E fuses are rated for applications up to 80 VDC. As fork lift trucks and electrical vehicle system voltages increase, circuit protection needs to be rated higher than the standard CNN products to handle the increased voltage. The CNN_E is considered very fast-acting for quicker reaction time.

Specifications

Voltage Ratings	48-80 VDC
Max. Interrupting Rating	2,500 A
Ampere Ratings	35 – 800 A
Approval	UL Recognized (File No. E71611)

Features/Benefits

- 80 VDC Protection
- Window shows fuse status
- 2,500 A interrupting rating
- Compact size saves space
- RoHS compliant and lead free

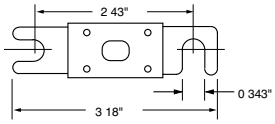

Ordering Information

AMPERE RATINGS CNN/E					
35	80	150	250	350	700*
40	90	175	275	400	800*
50	100	200	300	500	—
60	125	225	325	600	—

*Contact factory for availability

SERIES	AMP	VOLT DC	CATALOG NUMBER	ORDERING NUMBER	TYPE
CNN_E	200	80	CNN200E	0CNN200E.V	FAST-ACTING
CNN	200	48	CNN200	0CNN200.V	VERY FAST-ACTING
CNL	200	32	CNL200	0CNL200.V	FAST-ACTING

48 VDC products are available in fast-acting. See Web for details.

Recommended Fuse Holders

LFFB0003Z 116

Web Resources

80 V: **www.littelfuse.com/cnne**
48 V: **www.littelfuse.com/cnn**

HAZGARD™ Forklift Fuses

Description

HAZGARD fuses are designed to provide overcurrent protection for low voltage equipment used in hazardous operations. It is UL 248 recognized and has been evaluated for the use in UL 583 type EE and ES applications. Unique design does not require an additional enclosure as is needed with a standard forklift fuse, saving assembly time and costs.

Ordering Information

SERIES	AMPERAGE	CATALOG NUMBER	ORDERING NUMBER
581	200	581200	0581200.X

Applications

Lift trucks, scissor lifts, pallet movers, and other low voltage battery operated equipment used to move hazardous materials.

Features/Benefits

- Evaluated for use in UL 583 hazardous applications
- Easily upgrade Type E and ES equipment to Type EE
- Does not require an external enclosure

Specifications

Voltage Ratings	48 VAC/DC
Interrupting Rating	2,500 A
Ampere Rating	10 – 800 A
Approval	UL Recognized (File No. E71611)
Fuse Holder	LFFB003

AMPERE RATINGS		
10	135	400
35	150	425
50	160	500
90	200	675
100	225	750*
125	250	800*
130	300	—

*Contact factory for availability

© 2012 Littelfuse POWR-GARD® Products Catalog

PLUG FUSES AND BOLT-DOWN FUSES

125 VAC • 2-30 A

Edison-base plug fuses

Description

Littelfuse Plug Fuses provide overcurrent protection to general purpose circuits and small motor loads. Edison-base Plug fuses (TOO and TLO series) feature metal threads similar to incandescent lamp bases.

Specifications

Voltage Rating	125 VAC
Interrupting Rating	10 kA rms symmetrical
Approvals	UL Listed Plug Fuses, Standard UL 248-11

TOO Fuses are dual-element time-delay Edison-base fuses designed for motor and motor branch circuit protection; also suitable for all general purpose circuits. Use for replacement purposes only.

TOO Fuses Sample Part # 0TOO020.Z

AMPERE RATINGS			
2	6 1/4	12	25
4	8	15	30
5	10	20	—

TLO Fuses are medium time-delay Edison-base fuses designed for general purpose branch circuit protection.

TLO Fuses Sample Part # 0TLO020.Z

AMPERE RATINGS			
15	20	25	30

32 VAC/DC • 100-300 A

MEGA® SLO-BLO® bolt-on fuse

Description

The MEGA Fuse is designed for the protection of high current applications. Designed and patented by Littelfuse, it is ideal for battery and alternator protection and other heavy gauge cable applications.

Specifications

Voltage Rating	32 VAC/DC
Interrupting Rating	2000 A @ 32 VDC

Ordering Information

CATALOG NUMBER	ORDERING NUMBER	AMPERAGE RATING	VOLTAGE RATING	COLOR CODE
MEG100	0MEG100.X	100	32	
MEG125	0MEG125.X	125	32	
MEG150	0MEG150.X	150	32	
MEG175	0MEG175.X	175	32	
MEG200	0MEG200.X	200	32	
MEG225	0MEG225.X	225	32	
MEG250	0MEG250.X	250	32	
MEG300	0MEG300.X	300	32	

Recommended Fuse Holders

298900, see website: **www.littelfuse.com/mega**

Web Resources

TC Curves, downloadable CAD drawings and other technical information: **www.littelfuse.com/mega**

LGR/LMF IN-LINE FUSES AND LHR HOLDER

LGR Fuses

Fast-Acting • 300 VAC

Used as in-line protection for fluorescent fixtures, this fast-acting fuse is ideal for increasing the safety and reliability of lighting fixtures.

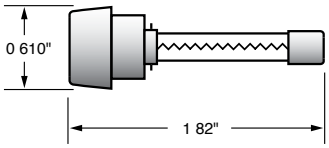

Specifications

Voltage Rating	300 VAC
Maximum Interrupting Rating	10 kA
Approvals	Standard 248-14 UL Listed (File No. E10480) CSA Certified (File No. LR29862)

Ordering Information

AMPERE RATINGS					
1/2	1 6/10	3	6	9	15
1	2	4	7	10	—
1 1/2	2 1/2	5	8	12	—

SERIES	AMPERAGE	CATALOG NUMBER	ORDERING NUMBER
LGR	5	LGR005	0LGR005.V

LMF Fuses

Time-Delay • 300 VAC

Perfect for use in lighting systems, this 300 VAC time-delay fuse is designed to handle ballast transformer in-rush currents.

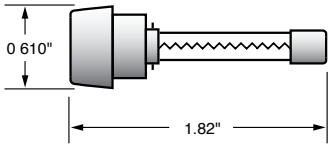

Specifications

Voltage Rating	300 VAC
Maximum Interrupting Rating	10 kA
Approvals	Standard 248-14 UL Listed (File No. E10480) CSA Certified (File No. LR29862)

Ordering Information

AMPERE RATINGS					
3/10	8/10	1 6/10	2 8/10	4	7
1/2	1	2	3	5	8
6/10	1 1/4	2 1/2	3 2/10	6 1/4	10

SERIES	AMPERAGE	CATALOG NUMBER	ORDERING NUMBER
LMF	5	LMF005	0LMF005.V

LHR Fuse Holder

Used as in-line protection for fluorescent fixtures, the Littelfuse LGR and LMF series fuses and LHR holder offer increased safety and reliability to lighting systems.

By individually fusing fixtures, electrical problems are isolated from the rest of the circuit. The added benefits of this is the ability to quickly identify the problem fixture and reduce the repair time.

Fuse holders are rated up to 10 amperes at 300 volts and are equipped with 7" 18 AWG leads. Order part number LHR000 for two leads, and part number LHR001 for one lead; with the other terminal used for insertion of 18 AWG ballast lead.

Specifications

Voltage Rating	300 VAC
Ampere Rating	LHR000 10 A LHR001 10 A
Approvals	UL Recognized CSA Certified (File No. 73160)
Flammability Rating	UL94 V-0
Example part number	LHR001
Ordering number	0LHR001T

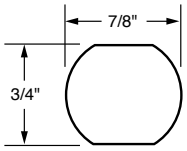

Knock-out Hole

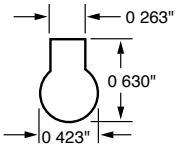

Keyhole Punch

Mounting Information

LHR001/LHR000 will fit keyhole punch or 0.875" knock-out hole. Anti-rotation feature is provided when used with keyhole punch.

A "U-shaped" clip is available for panel mounting (packaged 10 clips per bag): Order part number LHROCA.

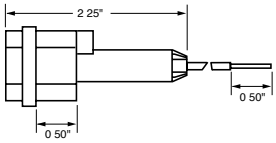

© 2012 Littelfuse POWR-GARD® Products Catalog

Littelfuse®
Expertise Applied | Answers Delivered

CABLE LIMITERS

600 VAC

DESCRIPTION			CATALOG NUMBER	
TYPE	TERMINATION	CABLE SIZE	CABLE TYPE	
			COPPER	ALUMINUM
1	CABLE TO CABLE	4/0	LFCL4/0C1	LFCL4/0A1
		250MCM	LFCL250C1	LFCL250A1
		350MCM	LFCL350C1	LFCL350A1
		500MCM	LFCL500C1	LFCL500A1
		750MCM	LFCL750C1	LFCL750A1
3	CABLE TO OFFSET BUS	4/0	LFCL4/0C3	LFCL4/0A3
		250MCM	LFCL250C3	LFCL250A3
		350MCM	LFCL350C3	LFCL350A3
		500MCM	LFCL500C3	LFCL500A3
		750MCM	LFCL750C3	LFCL750A3
5	STRAIGHT BUS TO OFFSET BUS	4/0	LFCL4/0C5	—
		250MCM	LFCL250C5	—
		350MCM	LFCL350C5	—
		500MCM	LFCL500C5	—
		750MCM	LFCL750C5	—
6	MOLE TO CABLE	4/0	LFCL4/0C6	LFCL4/0A6
		250MCM	LFCL250C6	LFCL250A6
		350MCM	LFCL350C6	LFCL350A6
		500MCM	LFCL500C6	LFCL500A6
		750MCM	LFCL750C6	LFCL750A6
8	MOLE TO OFFSET BUS	4/0	LFCL4/0C8	—
		250MCM	LFCL250C8	—
		350MCM	LFCL350C8	—
		500MCM	LFCL500C8	—
		750MCM	LFCL750C8	—

Note: For Type 5 and Type 8 Aluminum cable limiters, use the Copper Type C5 and C8.

Web Resources

For additional information, see website:
www.littelfuse.com/lfcl

Description

Cable limiters are fusible devices that provide very fast short-circuit protection, primarily to faulted cables, but also to other conductors such as busway. Cable limiters do not have an ampere rating, and cannot be used to provide overload protection. They are instead selected by cable size; for example, a 500 kcmil cable requires a 500 kcmil cable limiter. Their main use is to isolate faulted cables in circuits containing three or more parallel conductors per phase. They may be installed on the line side of the main service to provide short-circuit protection to the service conductors. This is especially important when service conductors are tapped from large low voltage networks or from large low impedance transformers.

Cable limiters have terminals which permit them to be installed in a variety of equipment. The most common configuration is the offset blade on one end and the crimp terminal on the other end. This permits the limiter to replace a cable terminal (lug).

Applications

- Service entrance conductors
- Between transformer or network bus and busway terminal boxes
- Large feeders with three or more conductors per phase

Features

- Current-limiting characteristics provide protection to conductor insulation and reduce damage when faults occur.
- Properly applied cable limiters may permit the use of equipment with reduced withstand ratings
- Wide variety of terminations and cable ratings permit use in almost every situation.

Specifications

Voltage Ratings	600 VAC
Interrupting Rating	200 kA
Cable Size Range	4/0 – 75MCM Copper or Aluminum

Note: For Type 5 and Type 8 Aluminum cable limiters, use the Copper Type C5 and C8.

Ordering Information

LFCL - 500 - C - 1

- **LFCL** — Littelfuse Cable Limiter
- **500** — Conductor Size
- **C** — Terminal Material (Aluminum or Copper)
- **1** — Type of Termination

TRADITIONAL SEMICONDUCTOR FUSES

150/250/500/600/700 VAC • Very Fast-Acting • 1-1200 A

Specifications

Voltage Ratings

L15S:	150 VAC/DC (1 – 60 A)
	150 VAC (70 – 1000 A)
	100 VDC (70 – 1000 A)
L25S:	250 VAC/DC (1 – 200 A)
	250 VAC (225 – 800 A)
	200 VDC (225 – 800 A)
L50S:	500 VAC/450 VDC
L60S:	600 VAC
KLC:	600 VAC
L70S:	700 VAC/650 VDC

L25S series fuses are Littelfuse Certified for DC ratings shown in Rating Table.

Interrupting Rating

AC:	200 kA rms
	(L15S series 100 kA)
DC:	20 kA
Ampere Range	1 – 1200 A See Rating Table for ratings available in each series.
Approvals	UL Recognized (File No. E71611)
	CSA Recognized (File No. LR29862)

Recommended Fuse Holders

1LFS101/1LFS102 121
LSCR001/LSCR002 120

Web Resources

For additional information, visit:
www.littelfuse.com/semi

AMPERE RATINGS	SERIES & VOLTAGE RATINGS					
	L15S 150 VAC 150 VDC (1 – 60 A) 100 VDC (70 – 1000 A)	L25S 250 VAC 250 VDC (1 – 200 A) 200 VDC (225 – 800 A)	L50S 500 VAC 450 VDC	L60S 600 VAC	KLC‡ 600 VAC	L70S 700 VAC 650 VDC
1	L15S 1	L25S 1	–	L60S 1	KLC 1	–
2	L15S 2	L25S 2	–	L60S 2	KLC 2	–
3	L15S 3	L25S 3	–	L60S 3	KLC 3	–
4	L15S 4	L25S 4	–	L60S 4	KLC 4	–
5	L15S 5	L25S 5	–	L60S 5	KLC 5	–
6	L15S 6	L25S 6	–	L60S 6	KLC 6	–
7	L15S 7	–	–	–	KLC 7	–
8	L15S 8	L25S 8	–	L60S 8	KLC 8	–
9	L15S 9	–	–	–	–	–
10	L15S 10	L25S 10	L50S 10	L60S 10	KLC 10	L70S 10
12	L15S 12	L25S 12	L50S 12	L60S 12	KLC 12	–
15	L15S 15	L25S 15	L50S 15	L60S 15	KLC 15	L70S 15
17½	–	–	–	L60S 17½	KLC 17½	–
20	L15S 20	L25S 20	L50S 20	L60S 20	KLC 20	L70S 20
25	L15S 25	L25S 25	L50S 25	L60S 25	KLC 25	L70S 25
30	L15S 30	L25S 30	L50S 30	L60S 30	KLC 30	L70S 30
35	L15S 35	L25S 35	L50S 35	L60S 35	KLC 35	L70S 35
40	L15S 40	L25S 40	L50S 40	L60S 40	KLC 40	L70S 40
45	L15S 45	L25S 45	–	L60S 45	KLC 45	–
50	L15S 50	L25S 50	L50S 50	L60S 50	KLC 50	L70S 50
60	L15S 60	L25S 60	L50S 60	L60S 60	KLC 60	L70S 60
70	L15S 70	L25S 70	L50S 70	L60S 70	KLC 70	L70S 70
80	L15S 80	L25S 80	L50S 80	L60S 80	KLC 80	L70S 80
90	L15S 90	L25S 90	L50S 90	L60S 90	KLC 90	L70S 90
100	L15S 100	L25S 100	L50S 100	L60S 100	KLC 100	L70S 100
110	–	–	–	–	KLC 110	–
125	L15S 125	L25S 125	L50S 125	L60S 125	KLC 125	L70S 125
150	L15S 150	L25S 150	L50S 150	L60S 150	KLC 150	L70S 150
175	–	L25S 175	L50S 175	L60S 175	KLC 175	L70S 175
200	L15S 200	L25S 200	L50S 200	L60S 200	KLC 200	L70S 200
225	–	L25S 225	L50S 225	L60S 225	KLC 225	L70S 225
250	L15S 250	L25S 250	L50S 250	L60S 250	KLC 250	L70S 250
275	–	L25S 275	L50S 275	–	–	–
300	L15S 300	L25S 300	L50S 300	L60S 300	KLC 300	L70S 300
350	L15S 350	L25S 350	L50S 350	L60S 350	KLC 350	L70S 350
400	L15S 400	L25S 400	L50S 400	L60S 400	KLC 400	L70S 400
450	L15S 450	L25S 450	L50S 450	L60S 450	KLC 450	L70S 450
500	L15S 500	L25S 500	L50S 500	L60S 500	KLC 500	L70S 500
550	–	–	L50S 550	–	–	–
600	L15S 600	L25S 600	L50S 600	L60S 600	KLC 600	L70S 600
700	–	L25S 700	L50S 700	L60S 700	KLC 700	L70S 700
800	L15S 800	L25S 800	L50S 800	L60S 800	KLC 800	L70S 800
900	–	–	LA50P9004	–	–	LA70P9004
1000	L15S 1000	–	LA50P10004	–	–	LA70P10004
1200	–	–	LA50P12004	–	–	LA70P12004

‡ KLC series fuses are recommended for replacement use only.

© 2012 Littelfuse POWR-GARD® Products Catalog

TRADITIONAL SEMICONDUCTOR FUSES

Dimensions

AMPERE RATING	FIG. NO.	DIMENSIONS INCHES (mm) A	B	C	D	E	F	G	H
L15S Series, 150 VAC									
1 – 30	1	1½ (38.1)	—	⅜ (9.5)	13/32 (10.3)	—	—	—	—
31 – 60	1	2 (50.8)	—	⅝ (15.9)	13/16 (20.6)	—	—	—	—
61 – 450	3	1 5/32 (29.4)	1⅞ (47.6)	2 3/16 (55.6)	2 21/32 (67.5)	1 (25.4)	43/64 (17.1)	5/16 (7.9)	3/16 (4.8)
451 – 1000	3	1¼ (31.8)	1 15/16 (49.2)	2 9/16 (65.1)	3½ (88.9)	1½ (38.1)	1 (25.4)	13/32 (10.3)	¼ (6.4)
L25S Series, 250 VAC									
1 – 30	1	2 (50.8)	—	½ (12.7)	9/16 (14.3)	—	—	—	—
31 – 60	2	1⅝ (41.3)	2¼ (57.2)	2½ (63.5)	3 3/16 (81.0)	13/16 (20.6)	23/32 (18.3)	11/32 (8.7)	⅛ (3.2)
61 – 200	3	1⅝ (41.3)	2 5/16 (58.7)	2 7/16 (61.9)	3⅛ (79.4)	1 7/32 (31.0)	1 (25.4)	5/16 (7.9)	3/16 (4.8)
201 – 700	3	1 19/32 (40.5)	2 9/32 (57.9)	2 29/32 (73.8)	3 27/32 (97.6)	1½ (38.1)	1 (25.4)	13/32 (10.3)	¼ (6.4)
701 – 800	3	1 19/32 (40.5)	2 9/32 (57.9)	2 29/32 (73.8)	3 27/32 (97.6)	2 (50.8)	1½ (38.1)	13/32 (10.3)	¼ (6.4)
L50S Series, 500 VAC / 450 VDC									
10 – 30	1	2 (50.8)	—	½ (12.7)	9/16 (14.3)	—	—	—	—
31 – 60	2	1⅝ (41.3)	2¼ (57.2)	2½ (63.5)	3 3/16 (81.0)	13/16 (20.6)	23/32 (18.3)	11/32 (8.7)	⅛ (3.2)
61 – 100	3	2⅛ (54.0)	2 11/16 (68.3)	3 (76.2)	3⅝ (92.1)	1 (25.4)	¾ (19.1)	11/32 (8.7)	⅛ (3.2)
101 – 200	3	2⅛ (54.0)	2 13/16 (71.4)	2 15/16 (74.6)	3⅝ (92.1)	1 7/32 (31.0)	1 (25.4)	5/16 (7.9)	3/16 (4.8)
201 – 400	3	2 3/32 (53.2)	2 25/32 (70.6)	3 13/32 (86.5)	4 11/32 (110.3)	1½ (38.1)	1 (25.4)	13/32 (10.3)	¼ (6.4)
401 – 600	3	2 7/32 (56.4)	2 29/32 (73.8)	3 17/32 (89.7)	4 15/32 (113.5)	2 (50.8)	1½ (38.1)	13/32 (10.3)	¼ (6.4)
601 – 800	3	2 7/32 (56.4)	4 9/32 (108.7)	4⅝ (117.5)	6 15/32 (164.3)	2½ (63.5)	2 (50.8)	17/32 (13.5)	⅜ (9.5)
L60S Series, 600 VAC									
1 – 30	1	5 (127.0)	—	⅝ (15.9)	13/16 (20.6)	—	—	—	—
31 – 60	2	2 25/32 (70.6)	3 7/16 (87.3)	3 11/16 (93.7)	4⅜ (111.1)	13/16 (20.6)	23/32 (18.3)	11/32 (8.7)	⅛ (3.2)
61 – 100	2	2 29/32 (73.8)	3 17/32 (89.7)	3 25/32 (96.0)	4 15/32 (113.5)	1 1/16 (27.0)	23/32 (18.3)	11/32 (8.7)	⅛ (3.2)
101 – 200	2	2 29/32 (73.8)	3 9/16 (90.5)	3¾ (95.3)	4 13/32 (111.9)	1 5/16 (33.3)	1 (25.4)	5/16 (7.9)	3/16 (4.8)
201 – 400	2	2 29/32 (73.8)	3 31/32 (100.8)	4 5/32 (105.6)	5⅛ (130.2)	1 37/64 (40.1)	1 (25.4)	13/32 (10.3)	¼ (6.4)
401 – 600	2	2⅞ (73.0)	3 31/32 (100.8)	4 9/64 (105.2)	5⅛ (130.2)	2 1/16 (52.8)	1½ (38.1)	13/32 (10.3)	¼ (6.4)
601 – 800	2	3 1/32 (77.0)	5 5/32 (133.4)	5 11/32 (135.7)	7¼ (184.2)	2½ (63.5)	2 (50.8)	17/32 (13.5)	⅜ (9.5)
L70S Series, 700 VAC / 600 VDC									
10 – 30	1	2 (50.8)	—	½ (12.7)	9/16 (14.3)	—	—	—	—
31 – 60	3	2⅞ (73.0)	3 7/16 (87.3)	3 25/32 (96.0)	4⅜ (111.1)	1 (25.4)	43/64 (17.1)	11/32 (8.7)	⅛ (3.2)
61 – 100	3	2⅞ (73.0)	3 9/16 (90.5)	3 11/16 (93.7)	4⅜ (111.1)	1 7/32 (31.0)	29/32 (22.9)	5/16 (7.9)	3/16 (4.8)
101 – 200	3	2 27/32 (72.2)	3 17/32 (89.7)	4 5/32 (105.6)	5 3/32 (129.4)	1½ (38.1)	1(25.4)	13/32 (10.3)	¼ (6.4)
201 – 400	3	2 27/32 (72.2)	3 17/32 (89.7)	4 5/32 (105.6)	5 3/32 (129.4)	2 (50.8)	1½ (38.1)	13/32 (10.3)	¼ (6.4)
401 – 600	3	2 27/32 (72.2)	4 29/32 (124.6)	5¼ (133.4)	7 3/32 (180.2)	2½ (63.5)	2 (50.8)	17/32 (13.5)	⅜ (9.5)
601 – 800	4	3 5/16 (84.1)	5 5/16 (134.9)	6 13/16 (173.0)	—	2⅞ (73.0)	2 (50.8)	⅝ (15.9)	H: ⅜ (9.5) J: 5/16 (7.9)
KLC Series, 600 VAC									
1 – 30	2	1⅞ (47.6)	2½ (63.5)	—	2⅞ (73.0)	9/16 (14.3)	13/32 (10.3)	¼ (6.4)	3/64 (1.2)
31 – 60	2	2¾ (69.9)	3⅜ (85.7)	3⅝ (92.1)	4 5/16 (109.5)	13/16 (20.6)	23/32 (18.3)	11/32 (8.7)	⅛ (3.2)
61 – 100	3	2⅞ (73.0)	3 21/32 (92.9)	4 1/16 (103.2)	5 (127.0)	1 (25.4)	¾ (19.1)	13/32 (10.3)	⅛ (3.2)
101 – 200	3	2 27/32 (72.2)	3 17/32 (89.7)	4⅜ (111.1)	5 3/32 (129.4)	1½ (38.1)	1 (25.4)	13/32 (10.3)	¼ (6.4)
201 – 400	3	2 27/32 (72.2)	4 21/32 (118.3)	4 27/32 (123.0)	6¼ (158.8)	2 (50.8)	1⅝ (41.3)	9/16 (14.3)	¼ (6.4)
401 – 800	3	2 27/32 (72.2)	4 21/32 (118.3)	5 11/32 (135.7)	6¼ (158.8)	2½ (63.5)	2 (50.8)	9/16 (14.3)	⅜ (9.5)

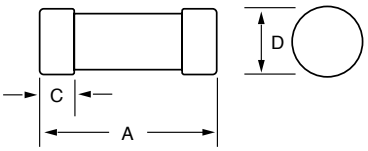

Fig 1

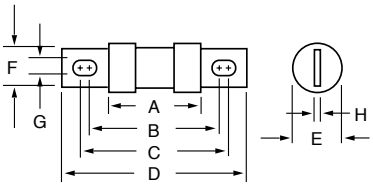

Fig 2

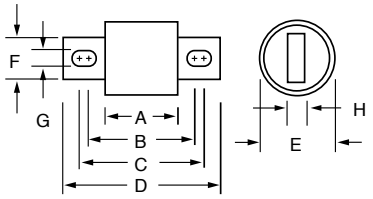

Fig 3

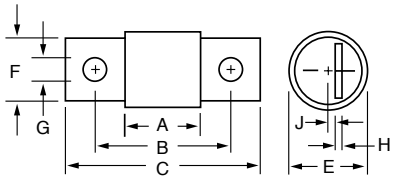

Fig 4

ALTERNATE DIMENSION SEMICONDUCTOR FUSES

150 VAC • Very Fast-Acting • 1-6000 A

LA15QS Series

AMPERE RATING	CATALOG NUMBER	MOUNTING TYPE	MAXIMUM CLEARING I^2t @150 VAC ($A^2S \times 10^3$)	WATTS LOSS @ RATED CURRENT (W)
1	LA15QS1-2	2	0.0002	0.68
2	LA15QS2-2	2	0.001	1.3
3	LA15QS3-2	2	0.003	1.7
4	LA15QS4-2	2	0.007	2.1
5	LA15QS5-2	2	0.012	2.8
6	LA15QS6-2	2	0.022	3.1
7	LA15QS7-2	2	0.011	2.2
8	LA15QS8-2	2	0.015	2.5
10	LA15QS10-2	2	0.019	2.6
12	LA15QS12-2	2	0.030	3
15	LA15QS15-2	2	0.042	3
20	LA15QS20-2	2	0.072	4
25	LA15QS25-2	2	0.14	5.2
30	LA15QS30-2	2	0.25	5.6
35	LA15QS35-1	1	0.21	9
40	LA15QS40-1	1	0.28	10
40	LA15QS40-4TI	4TI	0.39	3.1
45	LA15QS45-1	1	0.34	12
50	LA15QS50-1	1	0.47	13
50	LA15QS50-4	4	0.64	4
55	LA15QS55-1	1	Contact Factory	Contact Factory
60	LA15QS60-1	1	0.94	14
70	LA15QS70-4	4	2	5.6
70	LA15QS70-4TI	4TI	2	5.6
80	LA15QS80-4	4	2.5	8
80	LA15QS80-4TI	4TI	2.5	8
90	LA15QS90-4	4	3.1	9
100	LA15QS100-4	4	3.6	10
100	LA15QS100-4TI	4TI	3.6	10
130	LA15QS130-4	4	5.3	14
130	LA15QS130-4TI	4TI	5.3	14
150	LA15QS150-4	4	6.8	16
150	LA15QS150-4IL	4IL	6.8	16
150	LA15QS150-4TI	4TI	6.8	16
200	LA15QS200-4	4	9	22
200	LA15QS200-4IL	4IL	9	22

AMPERE RATING	CATALOG NUMBER	MOUNTING TYPE	MAXIMUM CLEARING I^2t @150 VAC ($A^2S \times 10^3$)	WATTS LOSS @ RATED CURRENT (W)
250	LA15QS250-4	4	15	22
250	LA15QS250-4TI	4TI	15	27
300	LA15QS300-4	4	22	33
300	LA15QS300-4IL	4IL	22	33
300	LA15QS300-4TL	4TI	22	33
350	LA15QS350-4	4	32	40
350	LA15QS350-4TI	4TI	32	40
400	LA15QS400-4	4	40	45
400	LA15QS400-4IL	4IL	40	45
400	LA15QS400-4TI	4TI	40	45
450	LA15QS450-4	4	50	50
450	LA15QS450-4IL	4IL	50	50
500	LA15QS500-4	4	90	30
500	LA15QS500-4IL	4IL	90	30
600	LA15QS600-4	4	130	35
600	LA15QS600-4IL	4IL	130	35
800	LA15QS800-4	4	290	57
1000	LA15QS1000-4	4	520	75
1000	LA15QS1000-4IL	4IL	520	75
1000	LA15QS1000-4TI	4TI	520	75
1000	LA15QS1000-128	128	540	88
1000	LA15QS1000-128IL	128IL	540	88
1200	LA15QS1200-128	128	680	100
1200	LA15QS1200-128IL	128IL	680	100
1500	LA15QS1500-128	128	1200	130
1500	LA15QS1500-128IL	128IL	1200	130
2000	LA15QS2000-128	128	1900	165
2000	LA15QS2000-128IL	128IL	1900	165
2500	LA15QS2500-128	128	3200	195
2500	LA15QS2500-128IL	128IL	3200	195
3000	LA15QS3000-128	128	4800	240
3000	LA15QS3000-128IL	128IL	4800	240
3500	LA15QS3500-128	128	6500	260
4000	LA15QS4000-128	128	8500	270
4000	LA15QS4000-128IL	128IL	8500	270
5000	LA15QS5000-128	128	Contact Factory	Contact Factory
6000	LA15QS6000-128	128	Contact Factory	Contact Factory

Specifications

Voltage Rating	AC: 150 V DC: 150 V
Interrupting Rating	100 kA
Ampere Range	1 – 6000 A
Approvals	UL Recognized

Web Resources

TC Curves, downloadable CAD drawings and other technical information: **www.littelfuse.com/la15qs**

Figure 1

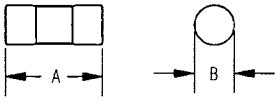

Figure 2

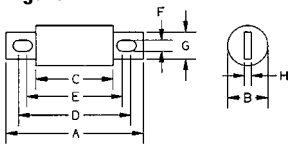

Figure 3

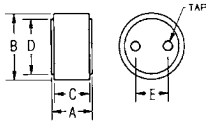

Figure 4

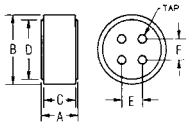

Figure 5

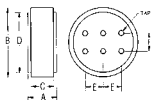

Dimensions for reference only.

Dimensions

AMPERE RATINGS	MOUNTING TYPE	FIGURE NO.	DIMENSIONS INCHES (mm)								TAP
			A	B	C	D	E	F	G	H	
1 – 30	2	1	1.50 (38.1)	0.41 (10.4)	–	–	–	–	–	–	–
35 – 60	1	1	2.00 (50.8)	0.81 (20.6)	–	–	–	–	–	–	–
40 – 450	4, 4TI*, 4IL*	2	2.66 (67.6)	1.00 (25.4)	1.16 (29.5)	2.19 (55.6)	1.91 (48.5)	0.31 (7.9)	0.88 (22.4)	0.19 (4.8)	–
500 – 1000	4, 4TI*, 4IL*	2	3.50 (88.9)	1.50 (38.1)	1.25 (31.8)	2.56 (65.0)	1.94 (49.3)	0.41 (10.4)	1.00 (25.4)	0.25 (6.4)	–
750 – 2000	128, 128IL*	3	1.88 (47.9)	2.00 (50.8)	1.63 (41.4)	1.75 (44.5)	1.00 (25.4)	–	–	–	⅜-24-½ deep
2500 – 3000	128, 128IL*	3	1.88 (47.9)	3.00 (76.2)	1.63 (41.4)	2.50 (63.5)	1.50 (38.1)	–	–	–	½-20-½ deep
3500 – 4000	128, 128IL*	4	1.88 (47.9)	3.50 (88.9)	1.63 (41.4)	3.00 (76.2)	1.06 (27.0)	1.06 (27.0)	–	–	½-20-½ deep
5000 – 6000	128	5	2.38 (60.5)	5.75 (146)	1.88 (47.7)	5.00 (127)	1.50 (38.1)	1.50 (38.1)	–	–	½-20-½ deep

*Optional Trigger Actuator (IL). Optional Trigger Indicator (TI) see web for dimensions.

© 2012 Littelfuse POWR-GARD® Products Catalog

Littelfuse®
Expertise Applied | Answers Delivered

ALTERNATE DIMENSION SEMICONDUCTOR FUSES

300 VAC • Very Fast-Acting • 35-4500 A

LA30QS Series

AMPERE RATING	CATALOG NUMBER	MOUNTING TYPE	MAXIMUM CLEARING I²T @300 VAC (A²S X 10³)	WATTS LOSS @ RATED CURRENT (W)
35	LA30QS35-4	4	0.9	6.4
40	LA30QS40-4	4	1.2	7
50	LA30QS50-4	4	2	9.9
60	LA30QS60-4	4	2.7	11.6
70	LA30QS70-4	4	1.6	11
80	LA30QS80-4	4	2.6	11
90	LA30QS90-4	4	3.2	13
100	LA30QS100-4	4	4.1	13
100	LA30QS100-4TI	4TI	4.1	13
125	LA30QS125-4	4	6.3	16
130	LA30QS130-4	4	6.3	16
150	LA30QS150-4	4	9.3	19
150	LA30QS150-4TI	4TI	9.3	19
175	LA30QS175-4	4	10	27
200	LA30QS200-4	4	15	30
200	LA30QS200-4TI	4TI	15	30
225	LA30QS225-4	4	22	33
250	LA30QS250-4	4	25	41
250	LA30QS250-4TI	4TI	25	41
300	LA30QS300-4	4	37	47
300	LA30QS300-4TI	4TI	37	47
350	LA30QS350-4	4	62	49
400	LA30QS400-4	4	83	56
400	LA30QS400-4IL	4IL	83	56
400	LA30QS400-4TI	4TI	83	56
450	LA30QS450-4	4	130	53

AMPERE RATING	CATALOG NUMBER	MOUNTING TYPE	MAXIMUM CLEARING I²T @300 VAC (A²S X 10³)	WATTS LOSS @ RATED CURRENT (W)
500	LA30QS500-4	4	160	59
550	LA30QS550-4	4	190	65
600	LA30QS600-4	4	230	69
600	LA30QS600-4TI	4TI	230	69
600	LA30QS600-4IL	4IL	230	69
700	LA30QS700-4	4	260	90
700	LA30QS700-128	128	260	73
800	LA30QS800-4	4	330	108
800	LA30QS800-4IL	4IL	330	108
800	LA30QS800-128	128	330	84
1000	LA30QS1000-128	128	460	105
1000	LA30QS1000-128IL	128IL	460	105
1200	LA30QS1200-128	128	880	110
1500	LA30QS1500-128	128	1400	140
1500	LA30QS1500-128IL	128IL	1400	140
1600	LA30QS1600-128	128	1690	150
2000	LA30QS2000-128	128	2600	190
2000	LA30QS2000-128IL	128IL	2600	190
2500	LA30QS2500-128	128	4000	230
2500	LA30QS2500-128IL	128IL	4000	230
3000	LA30QS3000-128	128	4700	340
3500	LA30QS3500-128	128	6500	380
3500	LA30QS3500-128IL	128IL	6500	380
4000	LA30QS4000-128	128	8600	450
4500	LA30QS4500-128	128	11000	500

Specifications

Voltage Rating	AC: 300 V DC: 300 V
Interrupting Rating	200 kA
Ampere Range	35 – 4500 A
Approvals	UL Recognized

Web Resources

TC Curves, downloadable CAD drawings and other technical information: **www.littelfuse.com/la30qs**

Figure 1

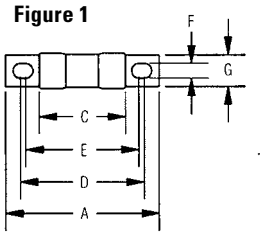

Figure 2

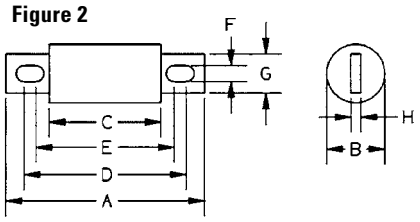

Figure 3

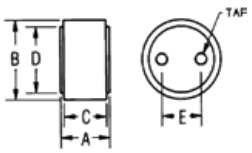

Figure 4

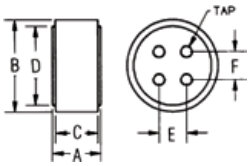

Dimensions

Dimensions for reference only.

AMPERE RATING	MOUNTING TYPE	FIGURE NO.	DIMENSIONS INCHES (mm)								TAP
			A	B	C	D	E	F	G	H	
35 – 60	4	1	3.19 (81.0)	0.81 (20.6)	1.63 (41.4)	2.50 (63.5)	2.25 (57.5)	0.34 (8.6)	0.72 (18.3)	0.13 (3.3)	–
70 – 200	4	2	3.13 (79.5)	1.22 (31.0)	1.63 (41.4)	2.44 (62.0)	2.31 (58.7)	0.31 (7.9)	1.00 (25.4)	0.19 (4.8)	–
225 – 800	4, 4IL*	2	3.84 (97.5)	1.50 (38.1)	1.59 (40.1)	2.91 (73.9)	2.28 (57.9)	0.41 (10.4)	1.00 (25.4)	0.25 (6.4)	–
800 – 1200	128	3	2.59 (65.8)	3.00 (76.2)	2.34 (59.4)	2.50 (63.5)	1.50 (38.1)	–	–	–	⅜-24-½ deep
1500 – 2500	128, 128IL*	4	2.59 (65.8)	3.50 (88.9)	2.34 (59.4)	3.00 (76.2)	1.50 (38.1)	1.50 (38.1)	–	–	⅜-24-½ deep
3000 – 4500	128, 128IL*	4	2.59 (65.8)	4.50 (114)	2.34 (59.4)	3.75 (95.3)	1.50 (38.1)	1.50 (38.1)	–	–	½-20-½ deep

*Optional Trigger Actuator (IL). Optional Trigger Indicator (TI) see web for dimensions.

ALTERNATE DIMENSION SEMICONDUCTOR FUSES

500 VAC • Very Fast-Acting • 35-1200 A

LA50QS Series

AMPERE RATING	CATALOG NUMBER	MOUNTING TYPE	MAXIMUM CLEARING I^2T @500 VAC (A^2S X 10^3)	WATTS LOSS @ RATED CURRENT (W)
35	LA50QS35-4	4	0.56	6
40	LA50QS40-4	4	0.69	7
50	LA50QS50-4	4	1.1	8
60	LA50QS60-4	4	1.8	10
70	LA50QS70-4	4	1.9	12
80	LA50QS80-4	4	2.6	14
90	LA50QS90-4	4	3.6	15
100	LA50QS100-4	4	4.4	17
125	LA50QS125-4	4	5.6	21
150	LA50QS150-4	4	9	25
175	LA50QS175-4	4	15	29
200	LA50QS200-4	4	20	33
225	LA50QS225-4	4	25	37

AMPERE RATING	CATALOG NUMBER	MOUNTING TYPE	MAXIMUM CLEARING I^2T @500 VAC (A^2S X 10^3)	WATTS LOSS @ RATED CURRENT (W)
250	LA50QS250-4	4	29	41
300	LA50QS300-4	4	55	49
350	LA50QS350-4	4	88	57
400	LA50QS400-4	4	98	65
450	LA50QS450-4	4	130	69
500	LA50QS500-4	4	160	77
600	LA50QS600-4	4	220	92
700	LA50QS700-4	4	270	110
800	LA50QS800-4	4	360	130
900	LA50QS900-4	4	500	140
1000	LA50QS1000-4	4	560	160
1200	LA50QS1200-4	4	930	175

Specifications

Voltage Rating AC: 500 V
DC: 500 V
Interrupting Rating AC: 200 kA
DC: 100 kA
Ampere Range 35 – 1200 A
Approvals UL Recognized
CSA Certified

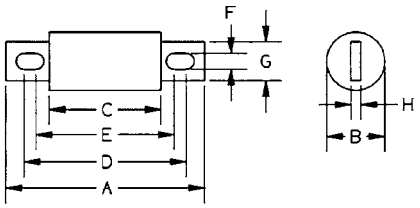

Web Resources

TC Curves, downloadable CAD drawings and other technical information: **www.littelfuse.com/la50qs**

Dimensions

Dimensions for reference only.

AMPERE RATING	MOUNTING TYPE	DIMENSIONS INCHES (mm)							
		A	B	C	D	E	F	G	H
35 – 100	4	3.63 (92.2)	1.00 (25.4)	2.13 (54.1)	2.94 (74.7)	2.75 (69.9)	0.31 (7.9)	0.75 (19.1)	0.13 (3.3)
125 – 200	4	3.63 (92.2)	1.22 (31.0)	2.13 (54.1)	2.94 (74.7)	2.81 (71.4)	0.31 (7.9)	1.00 (25.4)	0.19 (4.8)
225 – 400	4	4.34 (110)	1.50 (38.1)	2.09 (53.1)	3.41 (86.6)	2.78 (70.6)	0.41 (10.4)	1.00 (25.4)	0.25 (6.4)
450 – 600	4	4.47 (114)	2.00 (50.8)	2.22 (56.4)	3.53 (89.7)	2.91 (73.9)	0.41 (10.4)	1.50 (38.1)	0.25 (6.4)
700 – 800	4	6.47 (164.3)	2.50 (63.5)	2.22 (56.4)	5.00 (127.0)	3.44 (87.3)	0.53 (13.5)	1.50 (38.1)	0.25 (6.4)
900 – 1200	4	6.97 (177.0)	3.00 (76.2)	3.22 (81.8)	5.47 (138.9)	4.47 (113.5)	0.63 (15.9)	2.38 (60.3)	0.44 (11.1)

Contact Littelfuse for characteristic curves.

© 2012 Littelfuse POWR-GARD® Products Catalog

ALTERNATE DIMENSION SEMICONDUCTOR FUSES

600 VAC/DC • Very Fast-Acting • 5-40 A

LA60Q Series Semiconductor Fuses

AMPERE RATING	CATALOG NUMBER	MOUNTING TYPE	MAXIMUM CLEARING I^2T @600 VAC (A^2S)	WATTS LOSS @ RATED CURRENT (W)
5	LA60Q5-2	2	60	0.7
8	LA60Q8-2	2	70	1.1
10	LA60Q10-2	2	110	1.6
12	LA60Q12-2	2	150	2
15	LA60Q15-2	2	180	3
20	LA60Q20-2	2	330	4.4
25	LA60Q25-2	2	440	5.5
30	LA60Q30-2	2	860	5.6
35	LA60Q35-2	2	1300	6.4
40	LA60Q40-2	2	1800	7

Specifications

Voltage Rating	AC: 600 V DC: 600 V
Interrupting Rating	AC: 200 kA DC: 100 kA
Ampere Range	5 – 40 A
Approvals	UL Recognized

Contact Littelfuse for characteristic curves.

Description

Littelfuse LA60Q semiconductor protection fuses feature a 600 volt AC/DC rating in a compact size (1 ½" x 13/32"). LA60Q also has the lowest I^2t of all similar fuses and excellent cycling ability. Applications include inverters and small equipment requiring extremely fast response to faults, without the need to carry sustained heavy overloads.

Dimensions Inches

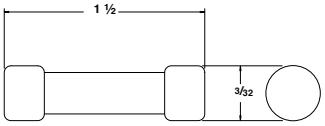

Web Resources

TC Curves, downloadable CAD drawings and other technical information: **www.littelfuse.com/la60q**

690 VAC/700 VDC • Very Fast-Acting • 10-100 A

LA70QS Series French Cylindrical Fuses

AMPERE RATING	CATALOG NUMBER (NO STRIKER)	CATALOG NUMBER (WITH STRIKER)	BODY SIZE	MAXIMUM CLEARING I^2T @700 VAC ($A^2S \times 10^3$)	WATTS LOSS @ RATED CURRENT (W)
10	LA70QS10-14F	LA70QS10-14FI	14 x 51	0.04	3.5
12	LA70QS12-14F	LA70QS12-14FI	14 x 51	0.06	4.4
16	LA70QS16-14F	LA70QS16-14FI	14 x 51	0.10	4.8
20	LA70QS20-14F	LA70QS20-14FI	14 x 51	0.16	5.2
25	LA70QS25-14F	LA70QS25-14FI	14 x 51	0.27	5.8
32	LA70QS32-14F	LA70QS32-14FI	14 x 51	1.50	7.0
40	LA70QS40-14F	LA70QS40-14FI	14 x 51	0.70	10.7
50	LA70QS50-14F	LA70QS50-14FI	14 x 51	1.50	11.6
20	LA70QS20-22F	LA70QS20-22FI	22 x 58	0.076	8.0
25	LA70QS25-22F	LA70QS25-22FI	22 x 58	0.125	10.0
32	LA70QS32-22F	LA70QS32-22FI	22 x 58	0.27	11.0
40	LA70QS40-22F	LA70QS40-22FI	22 x 58	0.48	13.0
50	LA70QS50-22F	LA70QS50-22FI	22 x 58	0.80	14.9
63	LA70QS63-22F	LA70QS63-22FI	22 x 58	1.85	16.0
80	LA70QS80-22F	LA70QS80-22FI	22 x 58	3.80	17.8
100	LA70QS100-22F	LA70QS100-22FI	22 x 58	8.00	19.0

Recommended Fuse Holders

CYH series for non-striker fuses LA70QS(amp)22F 183
CYH1451 series for LA70QS(amp)14F 183

Description

Littelfuse LA70QS semiconductor fuses were developed to provide improved performance required by today's new equipment. The LA70QS features lower I^2t, improved cycling, and lower watts loss. It is the best choice for the protection of dynamic solid-state equipment.

Dimensions

Please see website for dimensions:
www.littelfuse.com/la70qs

Specifications

Voltage Rating	AC: 690 V DC: 700 V
Interrupting Rating	AC: 200 kA DC: 100 kA
Ampere Range	10 – 100 A
Approvals	UL Recognized CSA Certified

Web Resources

TC Curves, downloadable CAD drawings and other technical information: **www.littelfuse.com/la70qs**

ALTERNATE DIMENSION SEMICONDUCTOR FUSES

700 VAC/VDC • Very Fast-Acting • 35-800 A

LA70QS Series Semiconductor Fuses

AMPERE RATING	CATALOG NUMBER	MOUNTING TYPE	MAXIMUM CLEARING I²T @700 VAC ($A^2S \times 10^3$)	WATTS LOSS @ RATED CURRENT (W)
35	LA70QS35-4	4	0.47	6.2
40	LA70QS40-4	4	0.58	7.5
50	LA70QS50-4	4	0.88	9.8
60	LA70QS60-4	4	1.2	12
70	LA70QS70-4	4	1.8	15
80	LA70QS80-4	4	2.3	16
90	LA70QS90-4	4	3	20
100	LA70QS100-4	4	3.6	24
125	LA70QS125-4	4	6.9	22
125	LA70QS125-4K	4K	6.9	22
150	LA70QS150-4	4	11	28
150	LA70QS150-4K	4K	11	29
175	LA70QS175-4	4	14	35
175	LA70QS175-4K	4K	14	35

AMPERE RATING	CATALOG NUMBER	MOUNTING TYPE	MAXIMUM CLEARING I²T @700 VAC ($A^2S \times 10^3$)	WATTS LOSS @ RATED CURRENT (W)
200	LA70QS200-4	4	19	41
200	LA70QS200-4K	4	19	41
250	LA70QS250-4	4	42	42
300	LA70QS300-4	4	55	53
350	LA70QS350-4	4	72	64
400	LA70QS400-4	4	99	75
450	LA70QS450-4	4	125	75
450	LA70QS450-4K	4K	125	75
500	LA70QS500-4	4	150	92
500	LA70QS500-4K	4K	160	92
600	LA70QS600-4	4	222	116
600	LA70QS600-4K	4K	222	116
700	LA70QS700-4	4	332	125
800	LA70QS800-4	4	433	143

Specifications

Voltage Rating AC: 700 V
DC: 700 V
Interrupting Rating AC: 200 kA
DC: 100 kA
Ampere Range 35 – 800 A
Approvals UL Recognized
CSA Certified

Web Resources

TC Curves, downloadable CAD drawings and other technical information: **www.littelfuse.com/la70qs**

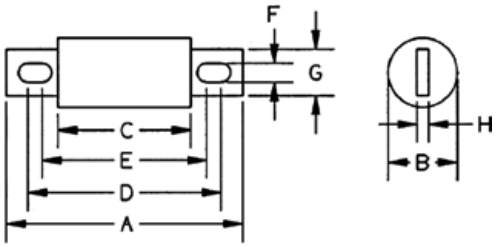

Dimensions

Dimensions for reference only.

AMPERES	MOUNTING TYPE	DIMENSIONS INCHES (mm)							
		A	B	C	D	E	F	G	H
35 – 100	4	4.38 (111)	1.00 (25.4)	2.88 (73)	3.69 (93.6)	3.50 (88.9)	0.31 (7.9)	0.75 (19.0)	0.13 (3.2)
125 – 200	4	4.38 (111)	1.22 (31.0)	2.88 (73)	3.69 (93.6)	3.56 (90.5)	0.31 (7.9)	1.00 (25.4)	0.19 (4.8)
125 – 200	4K	5.09 (129)	1.22 (31.0)	2.88 (73)	4.19 (106)	3.50 (88)	0.41 (10.3)	1.00 (25.4)	0.19 (4.8)
225 – 400	4	5.09 (129)	1.50 (38.1)	2.84 (72.2)	4.16 (106)	3.53 (89.7)	0.40 (10.3)	1.50 (38.1)	0.25 (6.4)
450 – 600	4	5.09 (129)	2.00 (50.8)	2.84 (72.2)	4.16 (106)	3.53 (89.7)	0.41 (10.3)	1.50 (38.1)	0.25 (6.4)
450 – 600	4K	7.09 (180)	2.00 (50.8)	2.84 (72.2)	6.16 (156)	3.53 (89.7)	0.53 (13.5)	1.50 (38.1)	0.25 (6.4)
700 – 800	4	7.09 (180)	2.50 (63.5)	2.84 (72.2)	5.28 (134)	4.91 (125)	0.53 (13.5)	2.00 (50.8)	0.38 (9.5)

Contact Littelfuse for characteristic curves.

© 2012 Littelfuse POWR-GARD® Products Catalog

Littelfuse®
Expertise Applied | Answers Delivered

ALTERNATE DIMENSION SEMICONDUCTOR FUSES

1000 VAC • Very Fast-Acting • 15-1000 A

LA100P Series Semiconductor Fuses

AMPERE RATING	CATALOG NUMBER	MOUNTING TYPE	MAXIMUM CLEARING I^2T @1000 VAC (A^2S X 10^3)	WATTS LOSS @ RATED CURRENT (W)
15	LA100P15-1	1	0.6	3.4
20	LA100P20-1	1	0.8	5.9
25	LA100P25-1	1	1,3	9
30	LA100P30-1	1	1.5	12.8
35	LA100P35-4	4	2.2	7.3
40	LA100P40-4	4	2.9	8.3
50	LA100P50-4	4	4.5	11
60	LA100P60-4	4	6.5	13
80	LA100P80-4	4	12	14
100	LA100P100-4	4	18	18
125	LA100P125-4	4	28	23
150	LA100P150-4	4	41	28
200	LA100P200-4	4	72	36
225	LA100P225-4	4	91	40
250	LA100P250-4	4	110	46
300	LA100P300-4	4	160	55
350	LA100P350-4	4	220	65
400	LA100P400-4	4	290	70
500	LA100P500-4	4	450	90
600	LA100P600-4	4	650	110
650	LA100P650-4	4	780	120
700	LA100P700-4	4	880	125
800	LA100P800-4	4	1200	140
1000	LA100P1000-4	4	1900	190

Figure 1

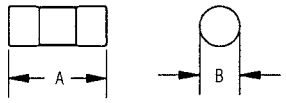

Figure 2

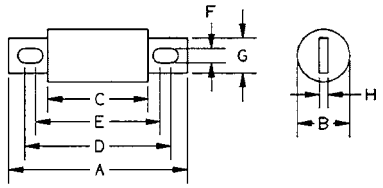

Figure 3

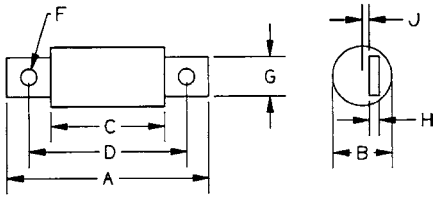

Figure 4

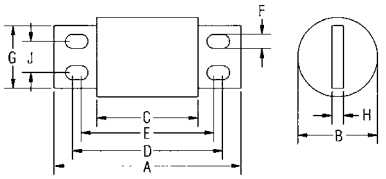

Web Resources

TC Curves, downloadable CAD drawings and other technical information: **www.littelfuse.com/la100p**

Specifications

Voltage Rating	AC: 1000 V DC: 750 V
Interrupting Rating	100 kA
Ampere Range	15 – 1000 A
Approvals	UL Recognized

Dimensions

Dimensions for reference only.

AMPERES	MOUNTING TYPE	FIGURE NO.	DIMENSIONS INCHES (mm)								
			A	B	C	D	E	F	G	H	J
15 – 30	1	1	2.53 (66.8)	0.56 (14.2)	–	–	–	–	–	–	–
35 – 60	4	2	5.00 (127)	1.00 (25.4)	3.50 (88.9)	4.31 (109)	4.19 (106)	0.31 (7.9)	0.75 (19.1)	0.13 (3.3)	–
65 – 100	4	2	5.00 (127)	1.22 (31)	3.50 (88.9)	4.31 (109)	4.19 (106)	0.31 (7.9)	1.00 (25.4)	0.19 (4.8)	–
125 – 200	4	2	5.72 (145)	1.50 (38.1)	3.47 (88.1)	4.78 (121)	4.16 (106)	0.41 (10.4)	1.00 (25.4)	0.25 (6.4)	–
225 – 400	4	2	5.72 (145)	2.00 (50.8)	3.47 (88.1)	4.78 (121)	4.16 (106)	0.41 (10.4)	1.50 (25.4)	0.25 (6.4)	–
500 – 600	4	2	7.72 (196)	2.50 (63.5)	3.47 (88.1)	5.88 (149)	5.56 (147)	0.53 (13.5)	2.00 (50.8)	0.38 (9.7)	–
650 – 800	4	3	7.44 (189)	2.88 (73.2)	3.94 (100)	5.94 (151)	–	0.63 (16)	2.00 (50.8)	0.38 (9.7)	0.31 (7.9)
1000	4	4	8.22 (209)	3.50 (88.9)	4.47 (114)	6.59 (167)	5.84 (148)	0.63 (16)	2.75 (69.9)	0.50 (12.7)	1.38 (35.1)

Optional Trigger Indicator (TI) for 50 A - 1000 A available
Contact Littelfuse for characteristic curves.

SQUARE BODY SEMICONDUCTOR FUSES

700/1300 VAC • Very Fast-Acting • 63-2500 A

Ordering Information

LA 070 URD 31 LI 350

Littelfuse

Voltage
070=700 V
130=1300 V

Class

Size

700 V	1300 V
30	70
31	71
32	72
33	73

Mounting Type

Straight-blade	KI	LI
Straight-blade	LI	LLI
Flat-type, one hole	TTI	TTI

Amp Rating

Description

Littelfuse North American style square body semiconductor fuses provide maximum flexibility in equipment design and ultimate protection for today's power conversion equipment. Available in different body sizes and multiple mounting styles, the broad range of ampere ratings allows great flexibility in equipment design.

Engineered to provide state-of-the-art protection for SCRs, diodes, thyristors, GTOs, and IGBT devices, Littelfuse square body fuses have pure die-cut elements embedded in solidified sand to control arcing and lower I^2t. All fuses are also equipped with a blown fuse trip indicator.

Features

- Choice of mounting styles provides a wide choice for equipment design.
- Broad range of ampere ratings in a given body size for design flexibility.
- Very low I^2t minimizes damage to protected components.
- Superior cycling ability for long, reliable life on high cyclic loading.
- Extremely fast-acting and current-limiting for improved protection to equipment.

Applications

Protection of rectifiers, inverters, DC drives, UPS systems, reduced voltage motor starters, and other equipment in globally accepted applications.

Specifications

Voltage Rating	AC:	700 V (LA070)
		1300 V (LA130)
	DC:	Contact factory
Interrupting Rating	AC:	200 kA (LA070)
		100 kA (LA130)
	DC:	Contact factory
Ampere Range		63 – 2500 A
Approvals		UL Recognized Component

Dimensions

Please refer to the Square Body dimensions 76-78

Web Resources

For additional information, visit:
www.littelfuse.com/la070

© 2012 Littelfuse POWR-GARD® Products Catalog

Littelfuse®
Expertise Applied | Answers Delivered

SQUARE BODY SEMICONDUCTOR FUSES

700/1300 VAC • Very Fast-Acting • 63-2500 A

BODY SIZE	AMPERE RATING	RATED VOLTAGE	MELTING I^2T ($A^2S \times 10^3$)	TOTAL I^2T @ RATED VOLTAGE ($A^2S \times 10^3$)	*WATTS LOSS @ RATED CURRENT (W)	LONG BLADE CATALOG NUMBER TYPE LI	SHORT BLADE CATALOG NUMBER TYPE KI	TAPPED TERMINAL CATALOG NUMBER TYPE TTI
30	63	700	0.2	1.2	14	LA070URD30LI0063	LA070URD30KI0063	LA070URD30TTI0063
	80	700	0.33	1.9	19	LA070URD30LI0080	LA070URD30KI0080	LA070URD30TTI0080
	100	700	0.47	2.7	26	LA070URD30LI0100	LA070URD30KI0100	LA070URD30TTI0100
	125	700	0.85	4.9	30	LA070URD30LI0125	LA070URD30KI0125	LA070URD30TTI0125
	160	700	1.6	9.2	37	–	LA070URD30KI0160	LA070URD30TTI0160
	200	700	3	16.7	42/43	LA070URD30LI0200	LA070URD30KI0200	LA070URD30TTI0200
	250	700	5.8	32.4	48/50	LA070URD30LI0250	LA070URD30KI0250	LA070URD30TTI0250
	315	700	12	67	53/55	LA070URD30LI0315	LA070URD30KI0315	LA070URD30TTI0315
	350	700	15.5	86	57/60	LA070URD30LI0350	LA070URD30KI0350	LA070URD30TTI0350
	400	700	23	130	60/65	LA070URD30LI0400	LA070URD30KI0400	LA070URD30TTI0400
	450	700	26	165	80/88	LA070URD30LI0450	LA070URD30KI0450	LA070URD30TTI0450
	500	700	41	264	80/88	LA070URD30LI0500	LA070URD30KI0500	LA070URD30TTI0500
	550	700	52	330	80/90	LA070URD30LI0550	LA070URD30KI0550	LA070URD30TTI0550
31	200	700	2.5	14.6	45	LA070URD31LI0200	LA070URD31KI0200	LA070URD31TTI0200
	250	700	4.7	27	52	LA070URD31LI0250	LA070URD31KI0250	LA070URD31TTI0250
	315	700	7.5	43	65	LA070URD31LI0315	LA070URD31KI0315	LA070URD31TTI0315
	350	700	10.5	59	67	LA070URD31LI0350	LA070URD31KI0350	LA070URD31TTI0350
	400	700	19	110	68	LA070URD31LI0400	LA070URD31KI0400	LA070URD31TTI0400
	450	700	26.5	150	70	LA070URD31LI0450	LA070URD31KI0450	LA070URD31TTI0450
	500	700	37	210	70/72	LA070URD31LI0500	LA070URD31KI0500	LA070URD31TTI0500
	550	700	52	300	70/75	LA070URD31LI0550	LA070URD31KI0550	LA070URD31TTI0550
	630	700	75	421	75/85	LA070URD31LI0630	LA070URD31KI0630	LA070URD31TTI0630
	700	700	95	530	85/95	LA070URD31LI0700	LA070URD31KI0700	LA070URD31TTI0700
	800	700	140	880	105/120	LA070URD31LI0800	LA070URD31KI0800	LA070URD31TTI0800
32	400	700	15	86	72/75	LA070URD32LI0400	LA070URD32KI0400	LA070URD32TTI0400
	450	700	22	124	77/80	LA070URD32LI0450	LA070URD32KI0450	LA070URD32TTI0450
	500	700	28	157	85/90	LA070URD32LI0500	LA070URD32KI0500	LA070URD32TTI0500
	550	700	37	211	90/95	LA070URD32LI0550	LA070URD32KI0550	LA070URD32TTI0550
	630	700	54	302	95/105	LA070URD32LI0630	LA070URD32KI0630	LA070URD32TTI0630
	700	700	76	432	100/110	LA070URD32LI0700	LA070URD32KI0700	LA070URD32TTI0700
	800	700	115	648	110/120	LA070URD32LI0800	LA070URD32KI0800	LA070URD32TTI0800
	900	700	170	972	110/125	LA070URD32LI0900	LA070URD32KI0900	LA070URD32TTI0900
	1000	700	240	1350	115/135	LA070URD32LI1000	LA070URD32KI1000	LA070URD32TTI1000
	1100	650	270	1620	140/165	LA065URD32LI1100	–	LA065URD32TTI1100
	1250	600	410	2100	150/180	LA060URD32LI1250	–	LA060URD32TTI1250
	1400	550	555	2600	160/190	LA055URD32LI1400	–	LA055URD32TTI1400
	1600	550	870	4000	165/195	LA055URD32LI1600	–	LA055URD32TTI1600
	1800	500	1050	4400	195/330	LA050URD32LI1800	–	LA050URD32TTI1800
33	500	700	19	108	105	LA070URD33LI0500	LA070URD33KI0500	LA070URD33TTI0500
	550	700	27	151	105/110	LA070URD33LI0550	LA070URD33KI0550	LA070URD33TTI0550
	630	700	40	227	110/120	LA070URD33LI0630	LA070URD33KI0630	LA070URD33TTI0630
	700	700	55	324	115/125	LA070URD33LI0700	LA070URD33KI0700	LA070URD33TTI0700
	800	700	95	529	120/130	LA070URD33LI0800	LA070URD33KI0800	LA070URD33TTI0800
	900	700	135	760	120/135	LA070URD33LI0900	LA070URD33KI0900	LA070URD33TTI0900
	1000	700	170	970	135/155	LA070URD33LI1000	LA070URD33KI1000	LA070URD33TTI1000
	1100	700	240	1360	135/160	LA070URD33LI1100	LA070URD33KI1100	LA070URD33TTI1100
	1250	700	350	2000	150/180	LA070URD33LI1250	LA070URD33KI1250	LA070URD33TTI1250
	1400	700	480	2700	160/200	LA070URD33LI1400	LA070URD33KI1400	LA070URD33TTI1400
	1600	650	555	3250	210/240	LA065URD33LI1600	–	LA065URD33TTI1600
	1800	650	720	4330	225/260	LA065URD33LI1800	–	LA065URD33TTI1800
	2000	600	950	5000	250/290	LA060URD33LI2000	–	LA060URD33TTI2000
	2250	550	1250	5900	280/330	LA055URD33LI2250	–	LA055URD33TTI2250
	2500	500	1870	7600	280/330	LA050URD33LI2500	–	LA050URD33TTI2500

*Watts loss data is published for both blade and tapped style mounting configurations.
When two watts loss values are shown, this represents tapped/blade values respectively.
Contact Littelfuse for characteristic curves.

SQUARE BODY SEMICONDUCTOR FUSES

700/1300 VAC • Very Fast-Acting • 63-2500 A

TYPES KI AND LI

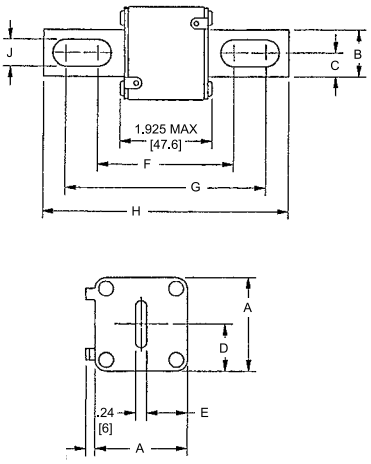

North American Straight Blade, Type KI

Dimensions

Dimensions for reference only.

CATALOG NUMBER	DIMENSIONS INCHES (mm)								
	A	B	C	D	E	F	G	H	J
LA070URD30KI (63-550)	1.57 (40)	0.98 (25)	0.49 (12.5)	0.83 (21)	0.71 (18)	2.68 (68)	4.21 (107)	5.08 (129)	0.41 (10.5)
LA070URD31KI (200-800)	2.01 (51)	0.98 (25)	0.49 (12.5)	1.0 (25.5)	0.89 (22.5)	2.66 (67.6)	4.22 (107.1)	5.07 (128.8)	0.56 (14.3)
LA070URD32KI (400-1000)	2.36 (60)	1.26 (32)	0.63 (16)	1.18 (30)	1.06 (27)	2.92 (74.2)	4.29 (109)	5.28 (134)	0.57 (14.6)
LA070URD33KI (500-1400)	2.93 (74.5)	1.57 (40)	0.79 (20)	1.46 (37.2)	1.35 (34.2)	2.97 (75.4)	4.24 (107.6)	5.28 (134)	0.63 (15.9)

North American Straight Blade, Type LI

Dimensions

Dimensions for reference only.

CATALOG NUMBER	DIMENSIONS INCHES (mm)								
	A	B	C	D	E	F	G	H	J
LA070URD30LI (63-550)	1.57 (40)	0.98 (25)	0.49 (12.5)	0.83 (21)	0.71 (18)	3.45 (87.6)	4.98 (126.6)	5.85 (148.6)	0.41 (10.5)
LA070URD31LI (200-800)	2.01 (51)	0.98 (25)	0.49 (12.5)	1.0 (25.5)	0.89 (22.5)	3.61 (91.6)	4.82 (122.4)	5.85 (148.6)	0.57 (14.6)
LA070URD32LI (400-1000) LA065URD32LI (1250) LA055URD32LI (1400-1600) LA050URD32LI (1800)	2.36 (60)	1.26 (32)	0.63 (16)	1.18 (30)	1.06 (27)	3.71 (94.2)	5.08 (129)	6.02 (153)	0.57 (14.6)
LA070URD33LI (500-1400) LA065URD33LI (1600-1800) LA060URD33LI (2000) LA055URD33LI (2250) LA050URD33LI (2500)	2.93 (74.5)	1.57 (40)	0.79 (20)	1.46 (37.2)	1.35 (34.2)	3.72 (94.4)	4.98 (126.6)	6.02 (153)	0.63 (15.9)

TYPE TTI

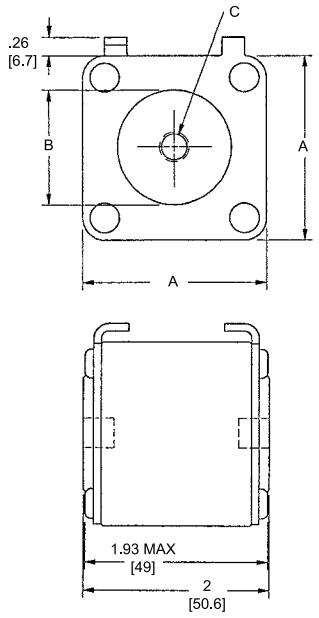

North American Flat Single Hole, Type TTI

Dimensions

Dimensions for reference only.

CATALOG NUMBER	DIMENSIONS INCHES (mm)		
	A	B	C
LA070URD30TTI (100-550)	1.57 (40)	1.00 (25)	5/16-18 x 0.35
LA070URD31TTI (200-800)	2.00 (50.8)	1.19 (30.2)	5/16-18 x 0.35
LA070URD32TTI (400-1000) LA065URD32TTI (1100) LA060URD32TTI (1250) LA055URD32TTI (1400-1600)	2.37 (60.3)	1.50 (38.1)	3/8-16 x 0.35
LA060URD33TTI (1800) LA070URD33TTI (500-1400) LA065URD33TTI (1600) LA060URD33TTI (2000) LA055URD33TTI (2250) LA050URD33TTI (2500)	2.94 (74.5)	1.81 (46)	1/2-18 x 0.35

© 2012 Littelfuse POWR-GARD® Products Catalog

Littelfuse®
Expertise Applied | Answers Delivered

SQUARE BODY SEMICONDUCTOR FUSES

700/1300 VAC • Very Fast-Acting • 63-2500 A

BODY SIZE	AMPERE RATING	RATED VOLTAGE	MELTING I²T (A²S X 10³)	TOTAL I²T @ RATED VOLTAGE (A²S X 10³)	*WATTS LOSS @ RATED CURRENT (W)	LONG BLADE CATALOG NUMBER TYPE LI/LLI	TAPPED TERMINAL CATALOG NUMBER TYPE TTI
70	63	1300	0.21	1.8	26	LA130URD70LI0063	LA130URD70TTI0063
	80	1300	0.47	4	27	LA130URD70LI0080	LA130URD70TTI0080
	100	1300	0.83	7.2	30	LA130URD70LI0100	LA130URD70TTI0100
	125	1300	1.3	11	38	LA130URD70LI0125	LA130URD70TTI0125
	160	1300	2.5	22	45	LA130URD70LI0160	LA130URD70TTI0160
	200	1300	4.7	40	54/56	LA130URD70LI0200	LA130URD70TTI0200
	250	1300	9.6	82	58/61	LA130URD70LI0250	LA130URD70TTI0250
	315	1300	20	172	66/72	LA130URD70LI0315	LA130URD70TTI0315
	350	1200	28	205	68/75	LA120URD70LI0350	LA120URD70TTI0350
71	160	1300	2.6	22	46	LA130URD71LLI0160	LA130URDT1TTI0160
	200	1300	4.7	40	54	LA130URD71LLI0200	LA130URD71TTI0200
	250	1300	8.9	76	61	LA130URD71LLI0250	LA130URD71TTI0250
	280	1300	12	102	68/70	LA130URD71IL0280	LA130URD71TTI0280
	315	1300	16	138	73/76	LA130URD71LLI0315	LA130URD71TTI0315
	350	1300	22	190	76/80	LA130URD71LLI0350	LA130URD71TTI0350
	400	1300	38	330	76/80	LA130URD71LLI0400	LA130URD71TTI0400
	450	1300	47	405	87/95	LA130URD71LLI0450	LA130URD71TTI0450
	500	1200	68	500	90/100	LA120URD71LLI0500	LA120URD71TTI0500
	550	1200	84	620	98/112	LA120URD71LLI0550	LA120URD71TTI0550
	630	1100	125	930	105	LA110URD71LLI0630	–
	630	1200	125	930	120	–	LA120URD71TTI0630
72	280	1300	10	90	72	LA130URD72LI0280	LA130URD72TTI0280
	315	1300	15	130	76	LA130URD72LI0315	LA130URD72TTI0315
	350	1300	21	180	77	LA130URD72LI0350	LA130URD72TTI0350
	400	1300	32	285	80	LA130URD72LI0400	LA130URD72TTI0400
	450	1300	44	380	87/89	LA130URD72LI0450	LA130URD72TTI0450
	500	1300	57	500	94/98	LA130URD72LI0500	LA130URD72TTI0500
	550	1300	68	590	110/120	LA130URD72LI0550	LA130URD72TTI0550
	630	1200	105	920	113	LA120URD72LI0630	–
	630	1300	105	920	125	–	LA130URD72TTI0630
	700	1100	145	1040	122	LA110URD72LI0700	–
	700	1200	145	1040	140	–	LA120URD72TTI0700
	800	1100	215	1590	125	LA110URD72LI0800	–
	800	1200	215	1590	146	–	LA120URD72TTI0800
73	315	1300	12	102	84	LA130URD73LI0315	LA130URD73TTI0315
	350	1300	17	150	86	LA130URD73LI0350	LA130URD73TTI0350
	400	1300	25	220	93	LA130URD73LI0400	LA130URD73TTI0400
	450	1300	35	310	99/100	LA130URD73LI0450	LA130URD73TTI0450
	500	1300	44	390	110/112	LA130URD73LI0500	LA130URD73TTI0500
	550	1300	57	500	116/120	LA130URD73LI0550	LA130URD73TTI0550
	630	1300	84	730	125/132	LA130URD73LI0630	LA130URD73TTI0630
	700	1300	110	960	135/146	LA130URD73LI0700	LA130URD73TTI0700
	800	1200	190	1630	136	LA120URD73LI0800	–
	800	1300	190	1630	148	–	LA130URD73TTI0800
	900	1100	250	2160	150	LA110URD73LI0900	–
	900	1000	250	2160	170	–	LA100URD73TTI0900
	1000	1000	370	2430	152/174	LA100URD73LI1000	LA100URD73TTI1000
	1100	1000	445	2580	168/208	LA100URD73LI1100	LA100URD73TTI1100
	1250	1000	585	3480	186/200	LA100URD73LI1250	LA100URD73TTI1250
	1400	900	755	3880	210/228	LA090URD73LI1400	LA090URD73TTI1400
	1600	700	1430	5630	203	LA070URD73LI1600	LA070URD73TTI1600
	1800	660	2040	7600	206	LA065URD73LI1800	LA065URD73TTI1800

*Watts loss data is published for both blade and tapped style mounting configurations.
When two watts loss values are shown, this represents tapped/blade values respectively.
Contact Littelfuse for characteristic curves.

SQUARE BODY SEMICONDUCTOR FUSES

700/1300 VAC • Very Fast-Acting • 63-2500 A

TYPES LI AND LLI

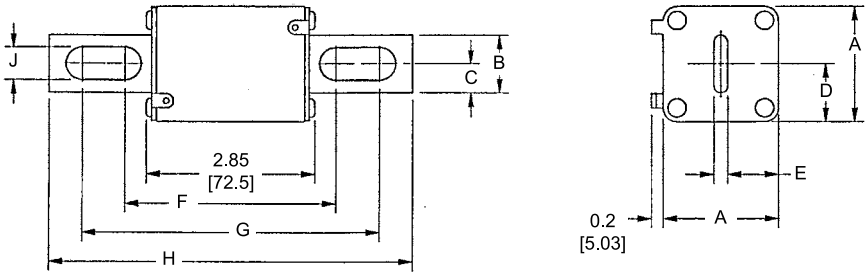

North American Straight Blade, Types LI and LLI

Dimensions

Dimensions for reference only.

CATALOG NUMBER	DIMENSIONS INCHES (mm)								
	A	B	C	D	E	F	G	H	J
LA130URD70LI (63-315) LA120URD70LI (350)	1.57 (40)	0.98 (25)	0.49 (12.5)	0.83 (21)	0.71 (18)	3.60 (91.4)	5.13 (130.4)	6.00 (152.4)	0.41 (10.5)
LA130URD71LLI (160-450) LA120URD71LLI (500-550) LA110URD71LLI (630)	2.01 (51)	0.98 (25)	0.49 (12.5)	1.0 (26.5)	0.89 (22.5)	3.60 (91.4)	5.13 (130.4)	6.00 (152.4)	0.57 (14.6)
LA130URD72LI (280-550) LA120URD72LI (800) LA110URD72LI (700-800)	2.36 (60)	1.26 (32)	0.63 (16)	1.18 (30)	1.06 (27)	3.84 (97.6)	5.2 (132.4)	6.20 (157.4)	0.57 (14.6)
LA130URD73LI (315-700) LA120URD73LI (800) LA110URD73LI (900-1000) LA090URD73LI (1400) LA070URD73LI (1600) LA065URD73LI (1800)	2.93 (74.5)	1.57 (40)	0.79 (20)	1.46 (37.2)	1.35 (34.2)	3.89 (98.8)	5.21 (132.4)	6.20 (157.4)	0.63 (15.9)

TYPE TTI

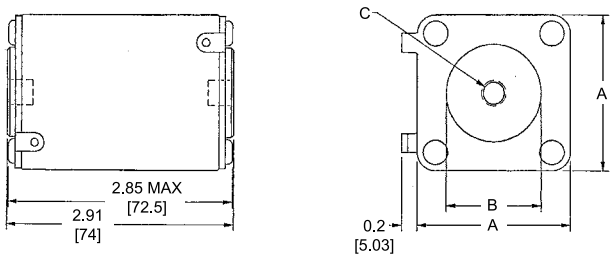

North American Flat Single Hole, Type TTI

Dimensions

CATALOG NUMBER	DIMENSIONS INCHES (mm)		
	A	B	C
LA130URD70TTI (63-315) LA120URD70TTI (350)	1.57 (40)	1.00 (26.4)	5/16-18 x 0.23 DP
LA130URD71TTI (160-450) LA120URD71TTI (550-630)	2.01 (51)	1.19 (30.2)	5/16-18 x 0.36 DP
LA130URD72TTI (280-630) LA120URD72TTI (700-800)	2.36 (60)	1.50 (38.1)	3/8-18 x 0.36 DP
LA130URD73TTI (315-900) LA120URD73TTI (1000) LA110URD73TTI (1250) LA090URD73TTI (1400) LA070URD73TTI (1600) LA065URD73TTI (1800)	2.93 (74.5)	1.81 (46)	1/2-18 x 0.36 DP

Dimensions for reference only.

© 2012 Littelfuse POWR-GARD® Products Catalog

Littelfuse®
Expertise Applied | Answers Delivered

OEM CUSTOM PRODUCTS

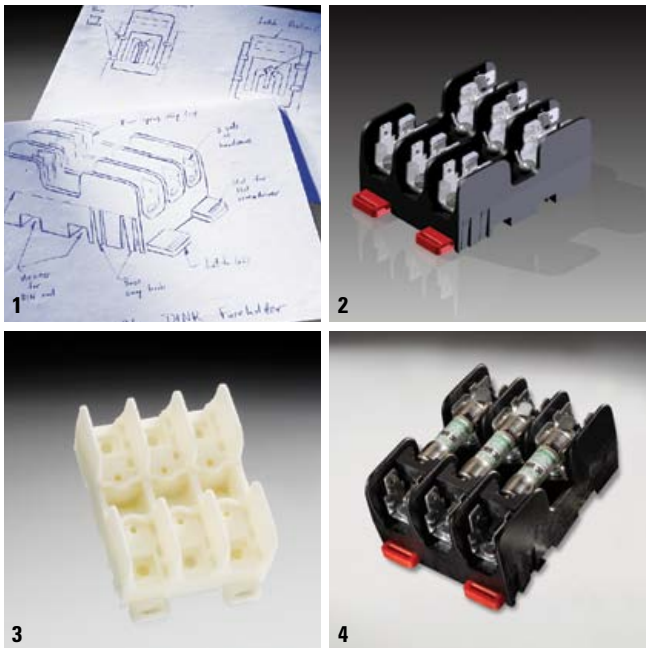

To speak with a sales associate regarding your application needs, call 800-TEC-FUSE (800-382-3873) or email techline@littelfuse.com.

Description

We understand that existing solutions don't always solve your current problems. Building on more than 80 years of circuit protection experience, the Littelfuse engineering team collaborates with customers to develop customized solutions for applications such as solar panels, HVAC systems, lift trucks, lighting fixtures, industrial restaurant equipment and power converters.

Process

The custom product design process begins with a situation analysis from our experienced engineers followed by our 4-step collaborative product development process.

1. Initial concept sketch created
2. CAD drawings to formalize the product description
3. 3D solid prototype to verify design
4. Final production parts that meet your design needs and specifications

Additional Customized Products

HAZGARD Fork Lift Fuse 62

Web Resources

To view examples of Littelfuse's custom solutions, visit: **www.littelfuse.com/industrialoem** and to see additional examples of Littelfuse's products solutions, visit: **www.littelfuse.com/custom**

Examples

Two-Pole Combination Block

Save space and money by combining multiple components in one unit. Littelfuse collaborated with the customer to develop a cost effective UL listed component that combined a 600 Volt 100A two-pole Class T fuse block with a two-openings-per-pole splicer block.

Custom-Leaded Fuse

Save space and reduce cost by eliminating the fuse block component. Littelfuse designed a series of custom through-hole PC-board mountable KLKD Midget fuses for a consumer application where reduced cost was more important than replaceability.

Section Overview

Littelfuse® offers a wide variety of dead-front and open-face fuse blocks, in addition to a variety of accessories, distribution/splicer blocks and in-line holders.

BLOCKS AND HOLDERS

Table of Contents

LF Series Fuse Blocks Overview 81

Class J Fuse Blocks....83

Class H/K5 and R Fuse Blocks 86

Class T Fuse Blocks 92

Class G Fuse Blocks....97

Class CC/CD and Midget Fuse Blocks 99

LF Series Fuse Block Covers 103

LFJ Solar Rated Fuse Block....104

Dead Front Fuse Holders 107

Miscellaneous Fuse Blocks and Holders 114

Semiconductor Fuse Blocks....120

Distribution and Splicer Blocks 122

In-Line Fuse Holders 131

FUSE BLOCKS OVERVIEW

Description

Littelfuse offers a comprehensive line of fuse blocks that incorporate many benefits such as indication, snap to-release, DIN-Rail mounting and universal mounting holes.

New Options Available

- Reduced Footprint—Save space with designs up to 35% smaller in width
- Indication—Increase safety and reduce downtime with built-in local neon indication
- Universal Mounting Holes—Simplify replacement with universal mounting options
- DIN Rail Mountable—Ease installation with a 35 mm hat DIN Rail mounting option
- One-Hand Release—Save time by using only one hand for a simple release from DIN Rail

Fuse Block Selection

The following guidelines should help simplify the selection of proper fuse blocks:

1. Determine the system voltage—Since fuses are selected on the basis of system voltage, fuse blocks are selected to match the voltage rating of the fuse.

2. Determine the design short-circuit current—If available short-circuit current cannot be determined, or if it will vary with equipment location, select fuses with a 200,000 ampere interrupting rating (A.I.R.) and mating fuse blocks with a withstand rating of 200,000 amperes for maximum safety.

3. Determine the type and ampere rating of the fuse to be used—The fuse ampere rating, opening characteristics (fast acting or time-delay) and size are important considerations in fuse selection. Fuse blocks may be used with a fuse rated at the corresponding amperage rating or below. For example, a fuse block rated at 30 amperes may be used with a fuse rated from 0 to 30 amperes.

4. Determine if NEC®, CSA, UL, or other requirements are applicable—Any of these requirements should be obtained from the approving agency in advance of fuse and fuse block selection.

5. Select the type of wire termination

Three types of wire termination are available:

- Screw*—for use with spade lugs or ring terminals
- Screw with Pressure Plate*—for use with solid or stranded wire without terminal. Recommended where vibration will be a factor
- Box Lug—for use with all types of solid wire and Class B and Class C stranded wire. The most durable, but not for use with welding cable or other rope-stranded conductors.

*¼" Quick Connect terminals rated for up to 20 amperes are available on the Midget and Class CC fuse blocks.

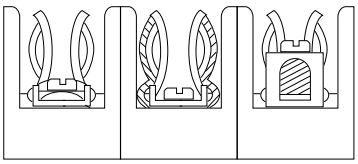

Screw w th Pressure P ate (P) | Screw (S) | Box Lug (C)

6. Decide on the number of poles in each block—The number of poles for each set of fuses is determined by the characteristics of the circuit.

7. Determine if block should be DIN Rail mounted—Many of the new Littelfuse fuse blocks are DIN Rail mountable. Be sure to look to corresponding ordering tables to match the correct part number on the following product pages.

8. Determine if fuse clips need to be reinforced

Fuse clips may have a tendency to lose some of their tension over a period of time. This may be prevented by specifying reinforced fuse clips.

Ordering Information

The Littelfuse fuse block part number consists of the below skeleton. Please refer to UL Class Tables for specific information.

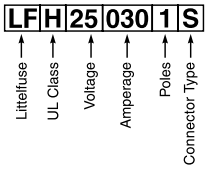

†For all Class R, H, J, and T Fuse blocks

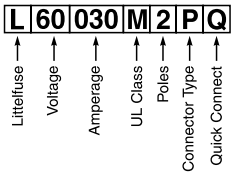

For all Class CC, G, and Midget-Style

†These new fuse blocks replace previous Littelfuse fuse blocks that had very similar part numbers for customer convenience. The only change is an "F" has been added as the second character in the new block part numbers.

Caution: Littelfuse indicating fuse holders are intended to quickly identify open fuses while power is still applied. Only qualified electrically trained technicians should replace fuses and follow standard OSHA and NFPA 70E safe work practices, such as Lock-Out and Tag-Out procedures and verification before replacing any fuses in indicating fuse holders.

LF SERIES INDICATING FUSE BLOCKS

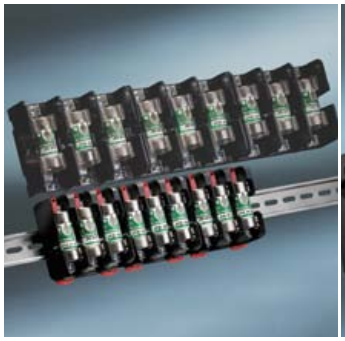

Smaller Footprint Provides Space Savings

DIN-Rail Mounting Eases Installation

Indication Improves Functionality

An Indication of Value

The Littelfuse LF Series Fuse Blocks and Covers offer generous space savings and a greater value over previous generations. View the different series classes for available indication, snap-to-release DIN rail mounting, universal mounting holes and touch-safe covers.

© 2012 Littelfuse POWR-GARD® Products Catalog

Littelfuse
Expertise Applied | Answers Delivered

LF SERIES CLASS J FUSE BLOCKS

600 V

Description

The Littelfuse 600 V Class J blocks offer generous space savings and enhanced value over previous generations, such as indication, snap-to-release DIN rail mounting and universal mounting holes.

Features/Benefits

- Space-saving design—up to 45% smaller than existing blocks
- Universal mounting holes for easy replacement
- Indication offered on all versions except 200–600 A
- One hand release from DIN rail for ferrule style fuses
- Reinforced fuse clips are standard on all Class J blocks
- Covers available for 100 A and lower to enhance safety

Specifications

Voltage Ratings	600 V
Ampere Ratings	0 – 600 A
Leakage Current	<0.6 mA at 600 V
Flammability Rating	UL94 V-0
Approvals	UL Listed: File No. E14721 CSA Certified: File No. LR7316
Environmental	RoHS Compliant, Lead (Pb) Free

Recommended Fuses

Time Delay

Series: JTD_ID 23
Series: JTD 23

Fast Acting

Series: JLS 24

For information about Touch-Safe Class J fuse holders:
www.littelfuse.com/lpsj

Web Resources

Sample requests, downloadable CAD drawings, fuse block cover datasheet and other technical information:
www.littelfuse.com/fuseblocks
www.littelfuse.com/lfj

Ordering Information (Class J 600 V)

AMP RATING	POLES	ORDERING NUMBER				TORQUE	TERMINAL	WIRE RANGE	WIRE TYPE		BASE TEMP RATING	DIN RAIL MOUNT	INDICATION	COVER ORDERING NUMBER*
		BASE PART NUMBER	SUFFIX											
			BOX LUG	PRESSURE PLATE	SCREW									
30	1	LFJ600301	CID	PID	SID	2.8 N-m (25 in-lbs)	C	6-14 AWG	CU Only	Solid/ Stranded	125°C	•	•	LFJ60030FBC
	2	LFJ600302	CID	PID	SID		P	10-14 AWG						
	3	LFJ600303	CID	PID	SID		S	10-22 AWG						
60	1	LFJ600601	CID	—	—	5.6 N-m (50 in-lbs)	2-4 AWG		CU-AL		125°C	•	•	LFJ60060FBC
	2	LFJ600602	CID	—	—	2.8 N-m (25 in-lbs)	6-14 AWG							
	3	LFJ600603	CID	—	—									
100	1	LFJ601001	CID	—	—	13.6 N-m (120 in-lbs)	2/0-6 AWG		CU-AL		130°C	—	•	LFJ60100FBC
	3	LFJ601003	CID	—	—	4.5 N-m (40 in-lbs)	8 AWG							
						4.0 N-m (35 in-lbs)	10-14 AWG							
200	1	LFJ602001	C	—	—	31.1 N-m (275 in-lbs)	250 kcmil-6		CU-AL		130°C	—	—	—
	3	LFJ602003	C	—	—									
400	1	LFJ604001	C	—	—	31.1 N-m (275 in-lbs)	(2) 350 kcmil-1/0		CU-AL		130°C	—	—	—
	3	LFJ604003	C	—	—									
600	1	LFJ606001	C	—	—	42.4 N-m (375 in-lbs)	(2) 500 kcmil-4		CU-AL		130°C	—	—	—
	3	LFJ606003	C	—	—									

Note: Reinforcing springs standard on all Class J fuse blocks.
**Covers sold individually. One cover needed for each pole.*

CLASS J FUSE BLOCK DIMENSIONS

Dimensions mm (inches)

600 V 30 A

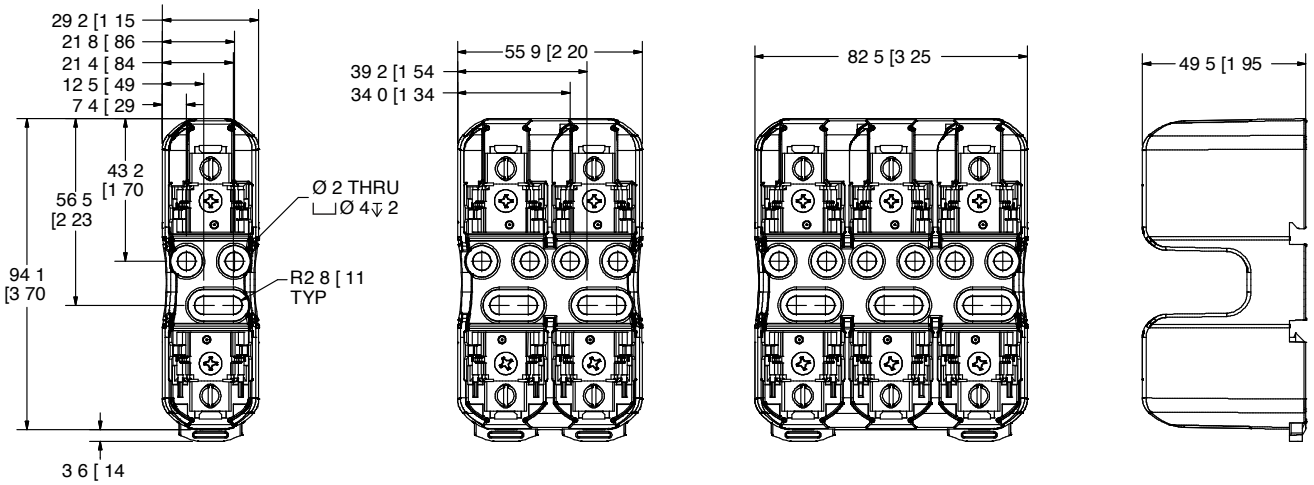

600 V 60 A

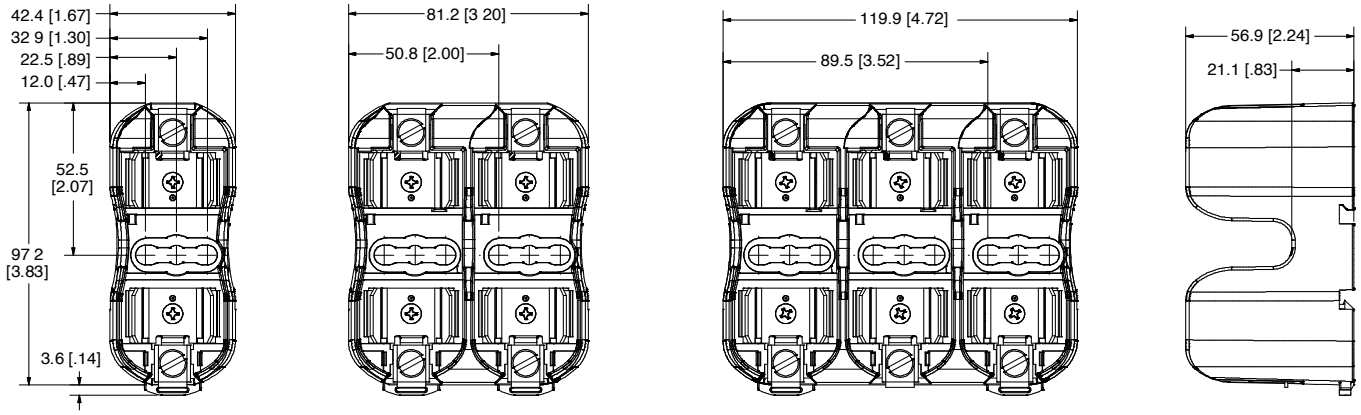

600 V 100 A

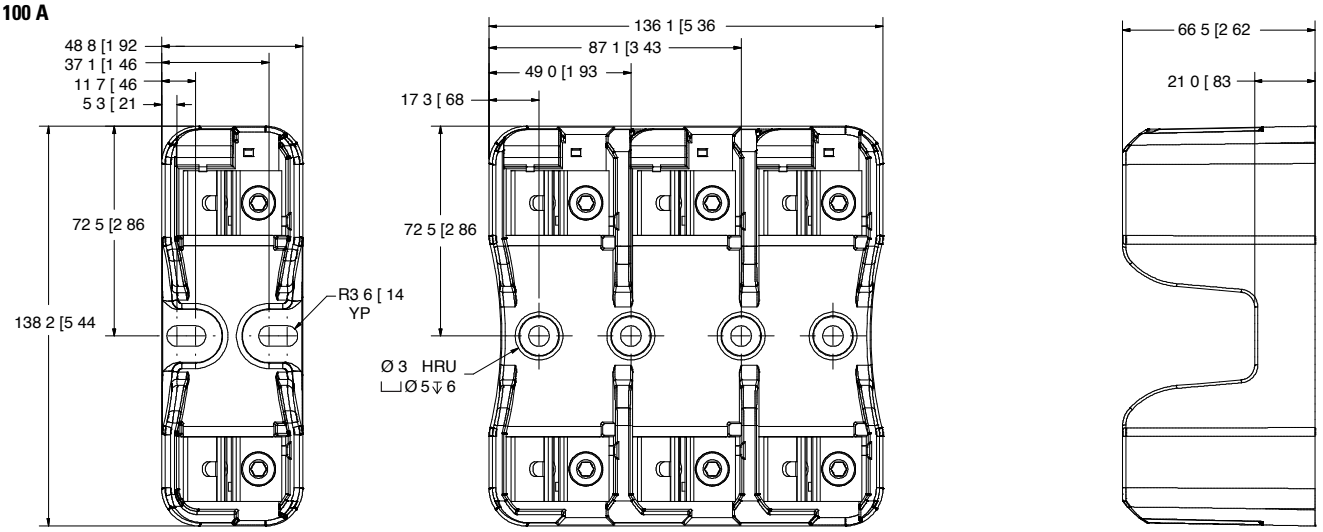

© 2012 Littelfuse POWR-GARD® Products Catalog

CLASS J FUSE BLOCK DIMENSIONS

Dimensions mm (inches)

600 V 200 A

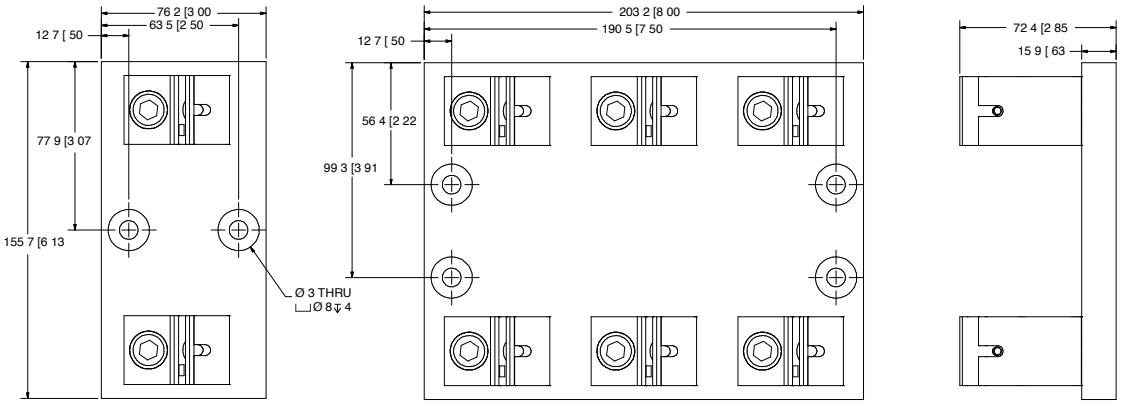

600 V 400 A

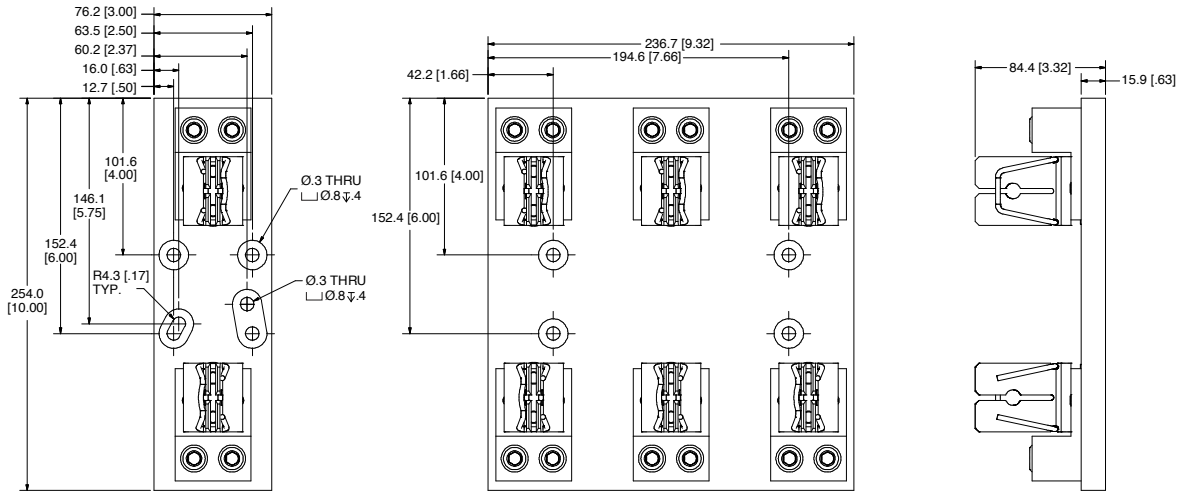

600 V 600 A

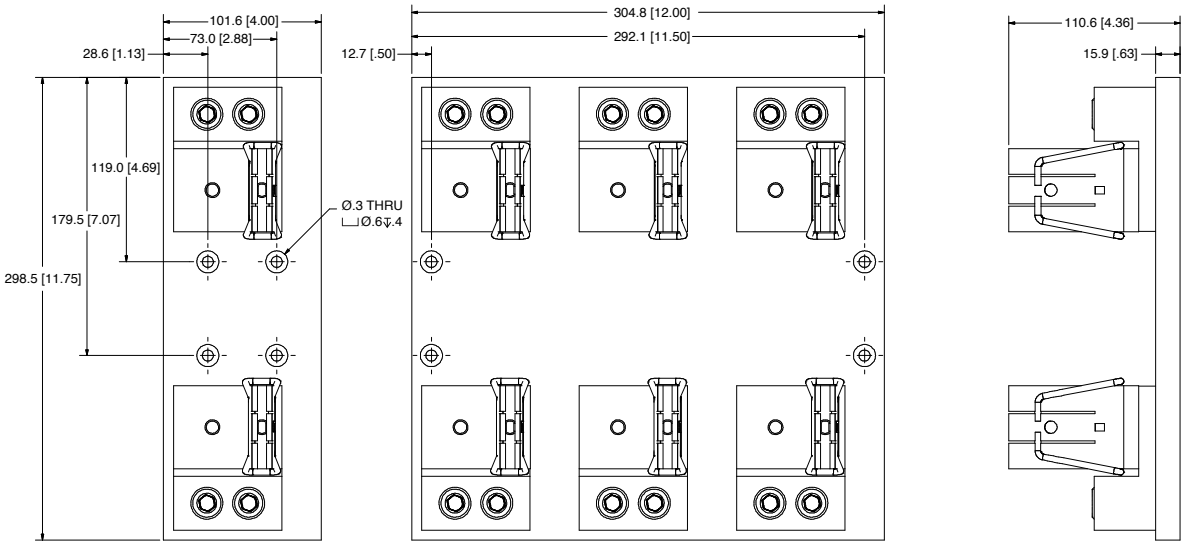

LF SERIES CLASS H/K5 AND R FUSE BLOCKS

250 V • 600 V

Description

The Littelfuse Class H/K5 and R blocks offer many benefits such as indication, snap-to-release DIN rail mounting and universal mounting holes. Class H and Class R fuse blocks are dimensionally the same, but Class R blocks incorporate a rejection feature, which only allows Class R fuses to be inserted.

Features/Benefits

- Universal mounting holes for easy replacement
- Indication offered on most 250 V and 600 V versions
- One hand release from DIN rail for ferrule style fuses
- Reinforced fuse clips are standard on all Class H and Class R fuse blocks
- Covers available for 100 A and lower to enhance safety

Web Resources

Sample requests, downloadable CAD drawings and other technical information: **www.littelfuse.com/lfh**
www.littelfuse.com/lfr
www.littelfuse.com/fuseblocks

Specifications

Voltage Rating	250 V, 600 V
Ampere Ratings	0-600 A
Leakage Current	<0.6 mA at 600 V
Withstand Rating	Class H: 10 kA RMS SYM Class R: 200 kA RMS SYM
Flammability Rating	UL94 V-0
Approvals	UL Listed (File No. E14721) CSA Certified (File No. LR7316)
Environmental	RoHS Compliant, Lead (Pb) Free

Recommended Fuses

Class H/K5 Blocks – 250 V
NLN 21
RLN 22

Class R Blocks – 250 V
FLNR/FLNR_ID 18
KLNR 15
LLNRK 14

Class H/K5 Blocks – 600 V
NLS 21
RLS 22

Class R Blocks – 600 V
FLSR/FLSR_ID 18
KLSR 15
LLSRK/LLSRK_ID 14
IDSR 17

Ordering Information (Class H 250 V)

AMP RATING	POLES	ORDERING NUMBER				TORQUE	TERMINAL	WIRE RANGE	WIRE TYPE		BASE TEMP RATING	DIN RAIL	INDICATION	COVER ORDERING NUMBER*
		BASE PART NUMBER	SUFFIX											
			BOX LUG	PRESSURE PLATE	SCREW									
30	1	LFH250301	C	P	S	2.8 N-m (25 in-lbs)	C	6-14 AWG	CU Only	Solid/ Stranded	125°C	•	—	LFH25030FBC
	2	LFH250302	C	P	S		P	10-14 AWG						
	3	LFH250303	C	P	S		S	10-22 AWG						
60	1	LFH250601	CID	—	—	5.6 N-m (50 in-lbs)	2-4 AWG		CU-AL		125°C	•	•	LFH25060FBC
	2	LFH250602	CID	—	—	2.8 N-m (25 in-lbs)	6-14 AWG							
	3	LFH250603	CID	—	—									
100	1	LFH251001	CID	—	—	13.6 N-m (120 in-lbs)	2/0-6 AWG		CU-AL		130°C	—	•	LFH25100FBC
	3	LFH251003	CID	—	—	4.5 N-m (40 in-lbs)	8 AWG							
						4.0 N-m (35 in-lbs)	10-14 AWG							
200	1	LFH252001	C	—	—	31.1 N-m (275 in-lbs)	250 kcmil-6		CU-AL		130°C	—	—	—
	3	LFH252003	C	—	—									
400	1	LFH254001	C	—	—	31.1 N-m (275 in-lbs)	(2) 350 kcmil-1/0		CU-AL		130°C	—	—	—
	3	LFH254003	C	—	—									
600	1	LFH256001	C	—	—	42.4 N-m (375 in-lbs)	(2) 500 kcmil-4		CU-AL		130°C	—	—	—
	3	LFH256003	C	—	—									

*Note: Reinforcing springs standard on all Class H fuse blocks. *Covers sold individually. One cover needed for each pole.*

© 2012 Littelfuse POWR-GARD® Products Catalog

LF SERIES CLASS H/K5 AND R FUSE BLOCKS

Ordering Information (Class H 600 V)

AMP RATING	POLES	ORDERING NUMBER				TORQUE	TERMINAL	WIRE RANGE	WIRE TYPE		BASE TEMP RATING	SNAP TO RELEASE	INDICATION	COVER ORDERING NUMBER*
		BASE ORDERING NUMBER	SUFFIX											
			BOX LUG	PRESSURE PLATE	SCREW									
30	1	LFH600301	CID	PID	SID	2.8 N-m (25 in-lbs)	C	6-14 AWG	CU Only	Solid/ Stranded	130°C	•	•	LFH60030FBC
	2	LFH600302	CID	PID	SID		P	10-14 AWG						
	3	LFH600303	CID	PID	SID		S	10-22 AWG						
60	1	LFH600601	CID	—	—	5.6 N-m (50 in-lbs)	2-4 AWG		CU-AL		130°C	•	•	LFH60060FBC
	2	LFH600602	CID	—	—									
	3	LFH600603	CID	—	—	2.8 N-m (25 in-lbs)	6-14AWG							
100	1	LFH601001	CID	—	—	13.6 N-m (120 in-lbs)	2/0-6AWG		CU-AL		130°C	—	•	LFH60100FBC
						4.5 N-m (40 in-lbs)	8 AWG							
	3	LFH601003	CID	—	—	4.0 N-m (35 in-lbs)	10-14 AWG							
200	1	LFH602001	C	—	—	31.1 N-m (275 in-lbs)	250 kcmil-6		CU-AL		130°C	—	—	—
	3	LFH602003	C	—	—									
400	1	LFH604001	C	—	—	31.1 N-m (275 in-lbs)	(2) 350 kcmil-1/0		CU-AL		130°C	—	—	—
	3	LFH604003	C	—	—									
600	1	LFH606001	C	—	—	42.4 N-m (375 in-lbs)	(2) 500 kcmil-4		CU-AL		130°C	—	—	—
	3	LFH606003	C	—	—									

Note: Reinforcing springs standard on all Class H fuse blocks.

Ordering Information (Class R 250 V)

AMP RATING	POLES	ORDERING NUMBER				TORQUE	TERMINAL	WIRE RANGE	WIRE TYPE		BASE TEMP RATING	SNAP TO RELEASE	INDICATION	COVER ORDERING NUMBER*
		BASE ORDERING NUMBER	SUFFIX											
			BOX LUG	PRESSURE PLATE	SCREW									
30	1	LFR250301	C	P	S	2.8 N-m (25 in-lbs)	C	6-14 AWG	CU Only	Solid/ Stranded	125°C	•	—	LFH25030FBC
	2	LFR250302	C	P	S		P	10-14 AWG						
	3	LFR250303	C	P	S		S	10-22 AWG						
60	1	LFR250601	CID	—	—	5.6 N-m (50 in-lbs)	2-4 AWG		CU-AL		125°C	•	•	LFH25060FBC
	2	LFR250602	CID	—	—									
	3	LFR250603	CID	—	—	2.8 N-m (25 in-lbs)	6-14 AWG							
100	1	LFR251001	CID	—	—	13.6 N-m (120 in-lbs)	2/0-6 AWG		CU-AL		130°C	—	•	LFH25100FBC
						4.5 N-m (40 in-lbs)	8 AWG							
	3	LFR251003	CID	—	—	4.0 N-m (35 in-lbs)	10-14 AWG							
200	1	LFR252001	C	—	—	31.1 N-m (275 in-lbs)	250 kcmil-6		CU-AL		130°C	—	—	—
	3	LFR252003	C	—	—									
400	1	LFR254001	C	—	—	31.1 N-m (275 in-lbs)	(2) 350 kcmil-1/0		CU-AL		130°C	—	—	—
	3	LFR254003	C	—	—									
600	1	LFR256001	C	—	—	42.4 N-m (375 in-lbs)	(2) 500 kcmil-4		CU-AL		130°C	—	—	—
	3	LFR256003	C	—	—									

Note: Reinforcing springs standard on all Class R fuse blocks.

Ordering Information (Class R 600 V)

AMP RATING	POLES	ORDERING NUMBER				TORQUE	TERMINAL	WIRE RANGE	WIRE TYPE		BASE TEMP RATING	SNAP TO RELEASE	INDICATION	COVER ORDERING NUMBER*
		BASE ORDERING NUMBER	SUFFIX											
			BOX LUG	PRESSURE PLATE	SCREW									
30	1	LFR600301	CID	PID	SID	2.8 N-m (25 in-lbs)	C	6-14 AWG	CU Only	Solid/ Stranded	130°C	•	•	LFH60030FBC
	2	LFR600302	CID	PID	SID		P	10-14 AWG						
	3	LFR600303	CID	PID	SID		S	10-22 AWG						
60	1	LFR600601	CID	—	—	5.6 N-m (50 in-lbs)	2-4 AWG		CU-AL		130°C	•	•	LFH60060FBC
	2	LFR600602	CID	—	—									
	3	LFR600603	CID	—	—	2.8 N-m (25 in-lbs)	6-14 AWG							
100	1	LFR601001	CID	—	—	13.6 N-m (120 in-lbs)	2/0-6 AWG		CU-AL		130°C	—	•	LFH60100FBC
				—	—	4.5 N-m (40 in-lbs)	8 AWG							
	3	LFR601003	CID	—	—	4.0 N-m (35 in-lbs)	10-14 AWG							
200	1	LFR602001	C	—	—	31.1 N-m (275 in-lbs)	250 kcmil-6		CU-AL		130°C	—	—	—
	3	LFR602003	C	—	—									
400	1	LFR604001	C	—	—	31.1 N-m (275 in-lbs)	(2) 350 kcmil-1/0		CU-AL		130°C	—	—	—
	3	LFR604003	C	—	—									
600	1	LFR606001	C	—	—	42.4 N-m (375 in-lbs)	(2) 500 kcmil-4		CU-AL		130°C	—	—	—
	3	LFR606003	C	—	—									

Note: Reinforcing springs standard on all Class R fuse blocks.
**Covers sold individually. One cover needed for each pole.*

CLASS H/K5 AND R FUSE BLOCKS

Dimensions mm (inches)

250 V 30 A

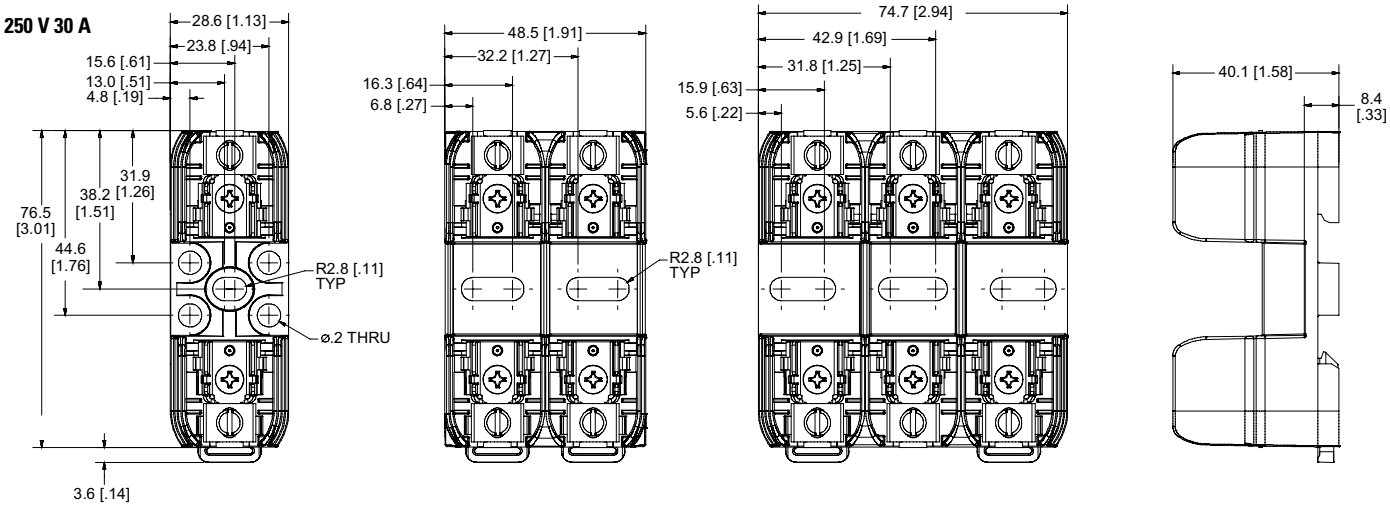

250 V 60 A

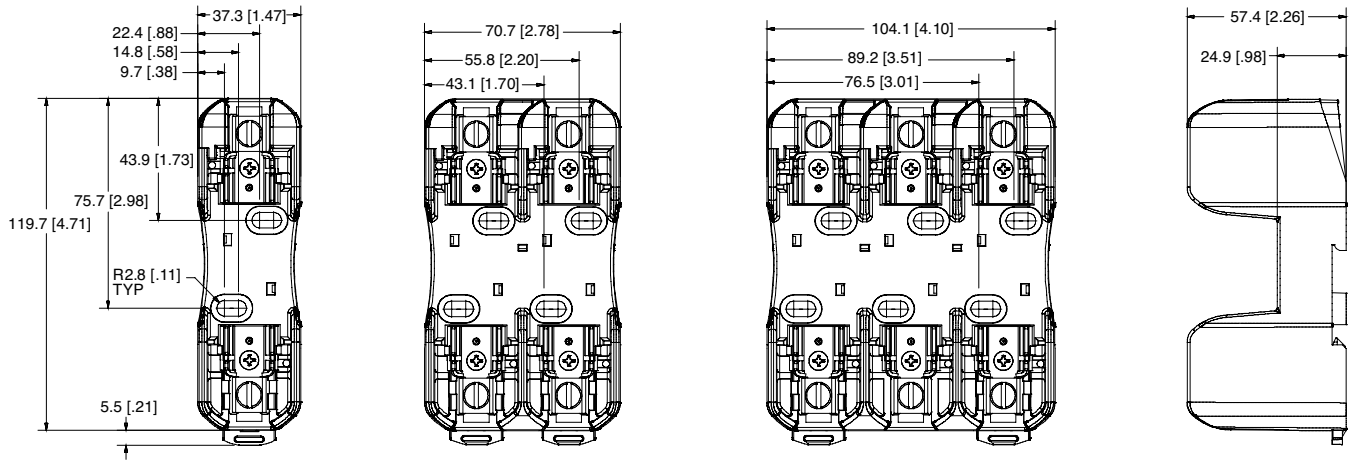

250 V 100 A

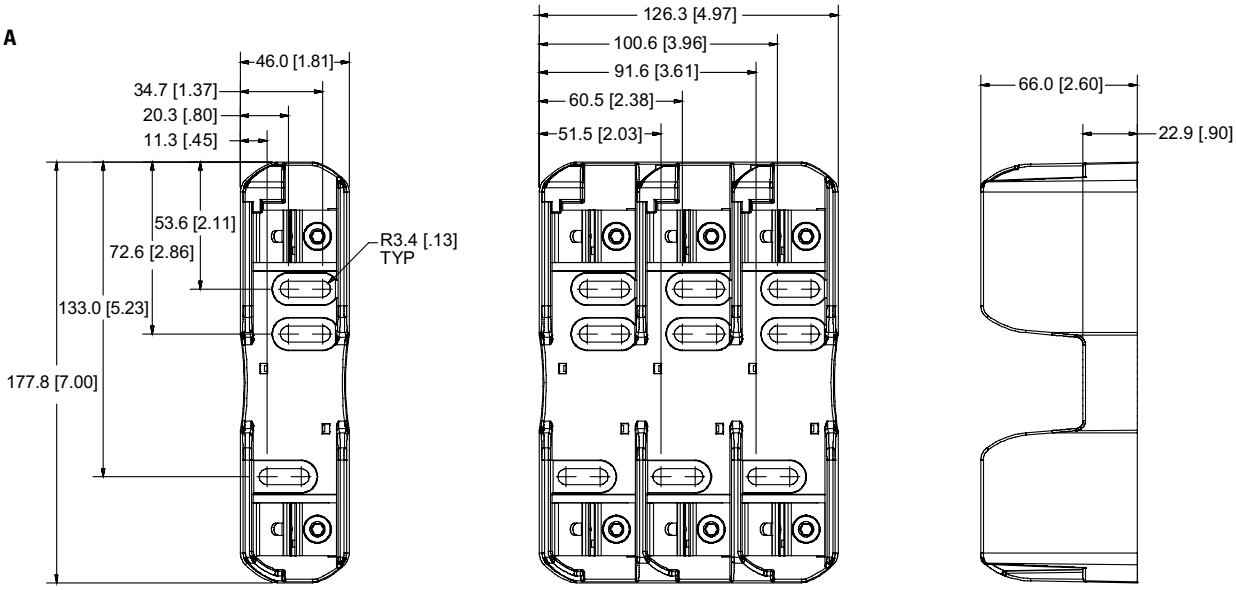

© 2012 Littelfuse POWR-GARD® Products Catalog

Littelfuse®
Expertise Applied | Answers Delivered

CLASS H/K5 AND R FUSE BLOCKS

Dimensions mm (inches)

250 V 200 A

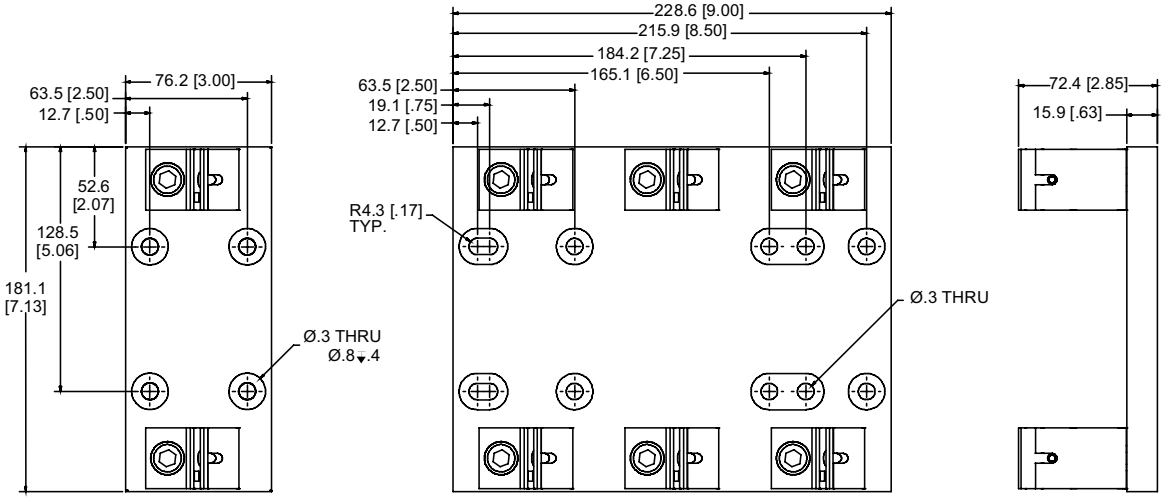

250 V 400 A

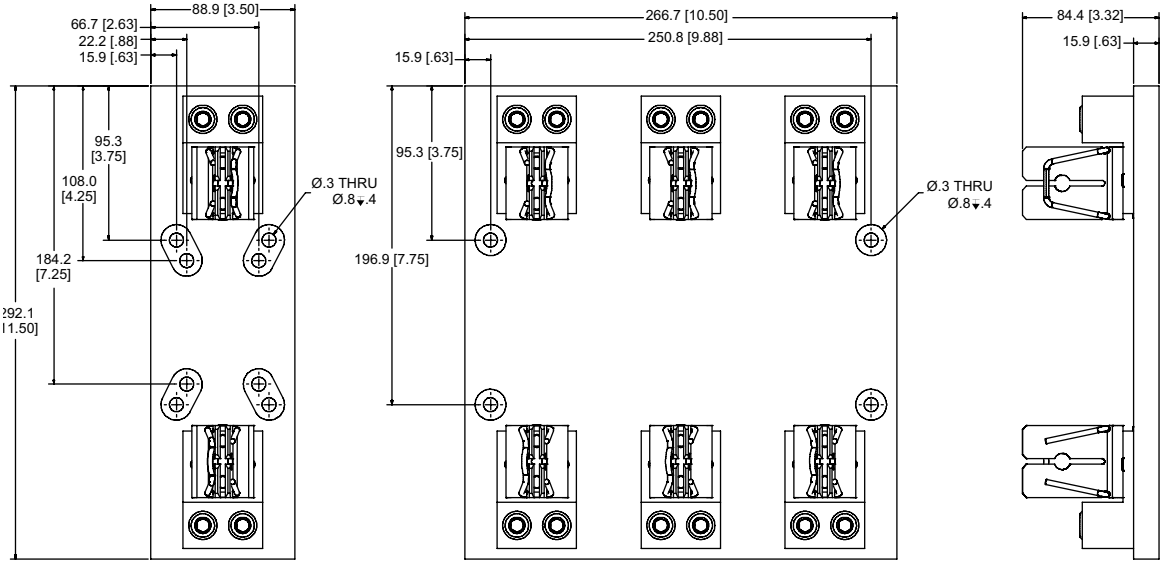

250 V 600 A

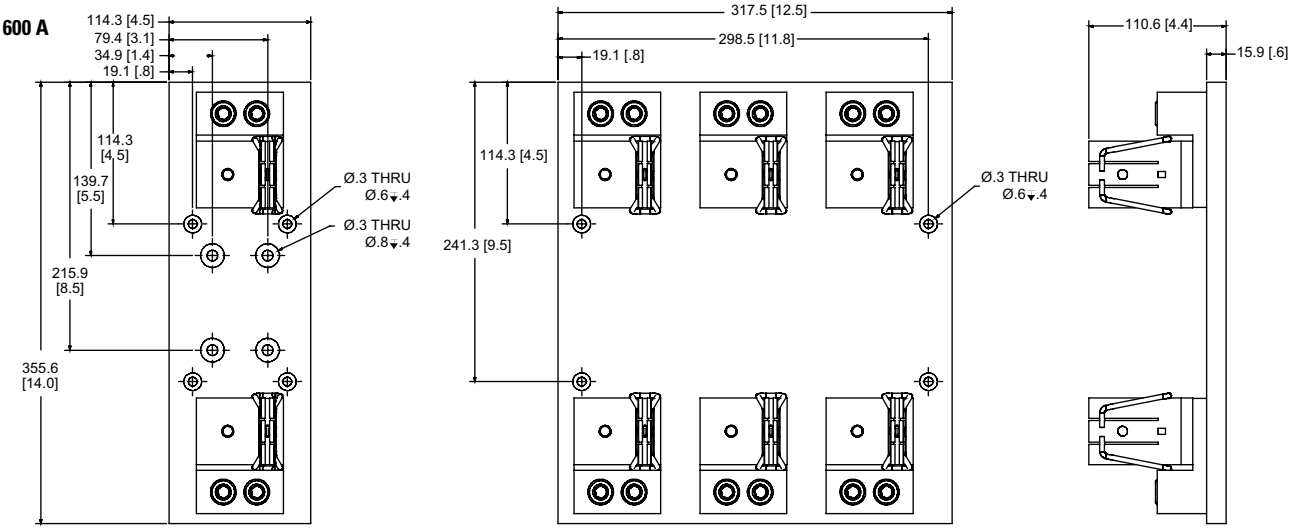

CLASS H/K5 AND R FUSE BLOCKS

Dimensions mm (inches)

600 V 30 A

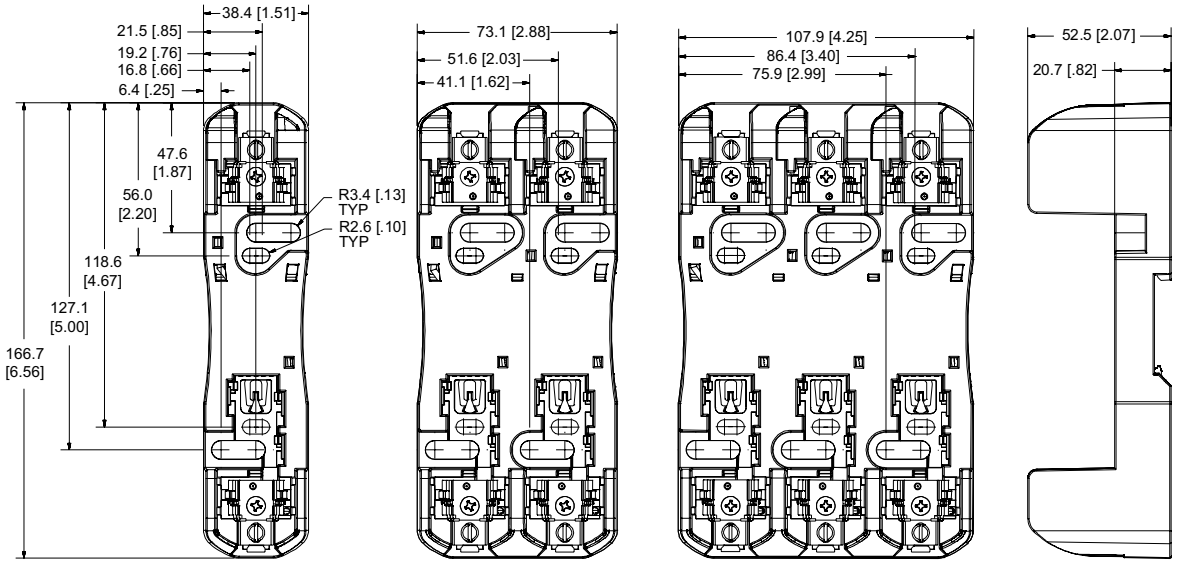

600 V 60 A

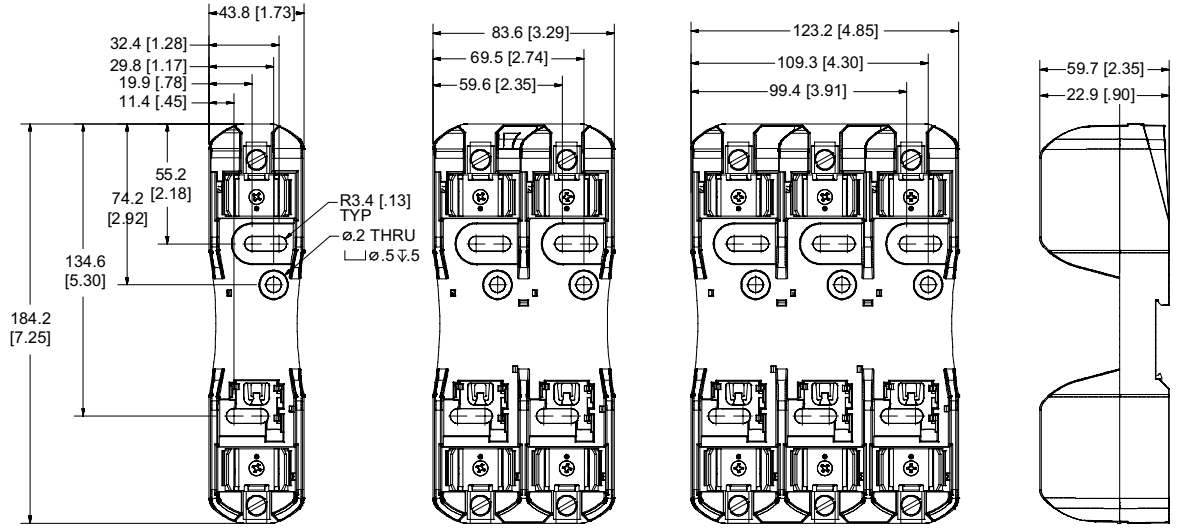

600 V 100 A

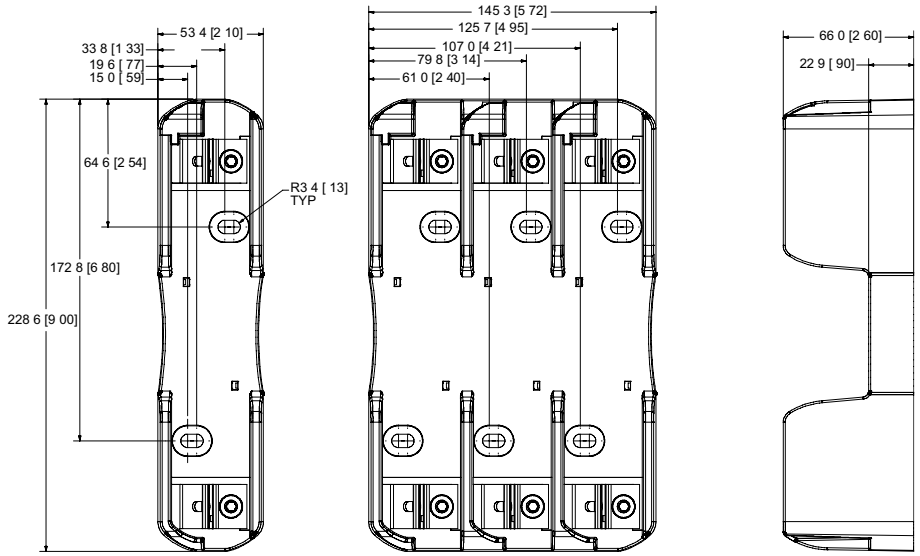

© 2012 Littelfuse POWR-GARD® Products Catalog

CLASS H/K5 AND R FUSE BLOCKS

Dimensions mm (inches)

600 V 200 A

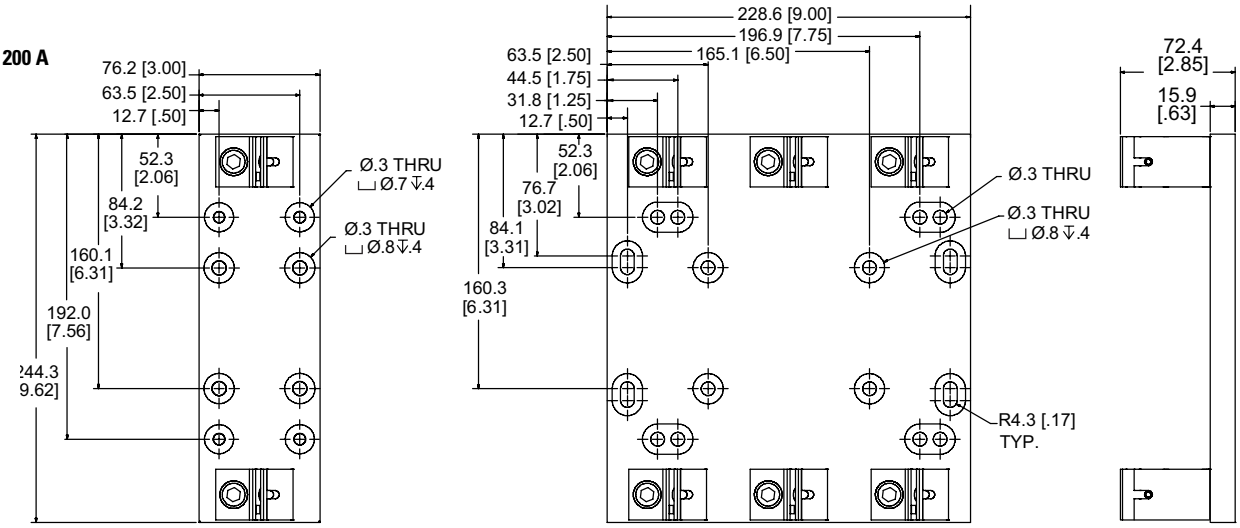

600 V 400 A

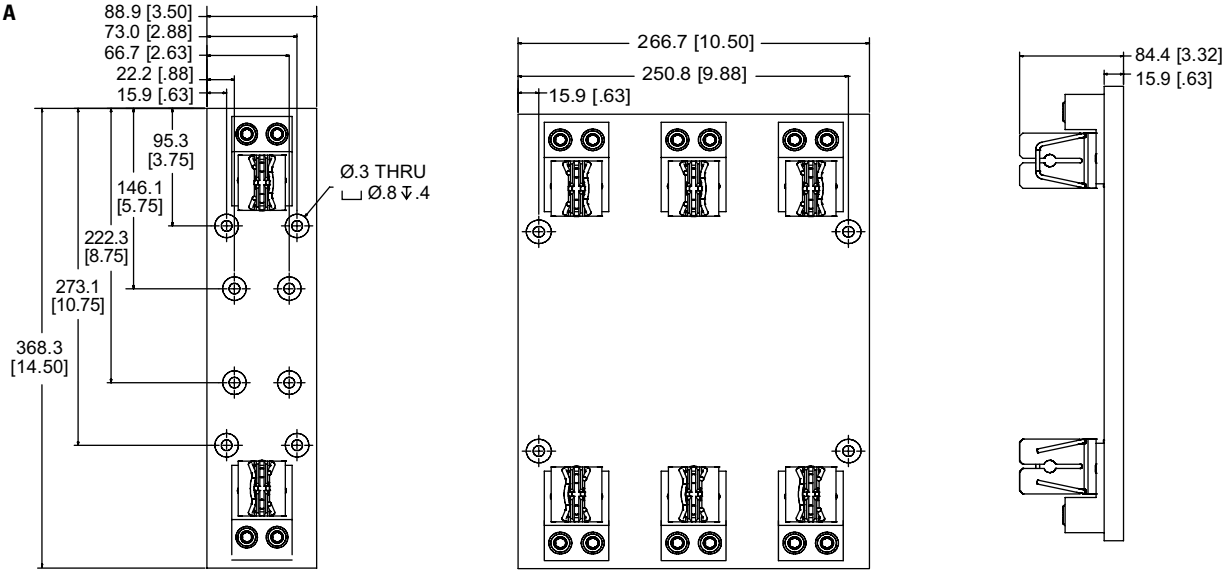

600 V 600 A

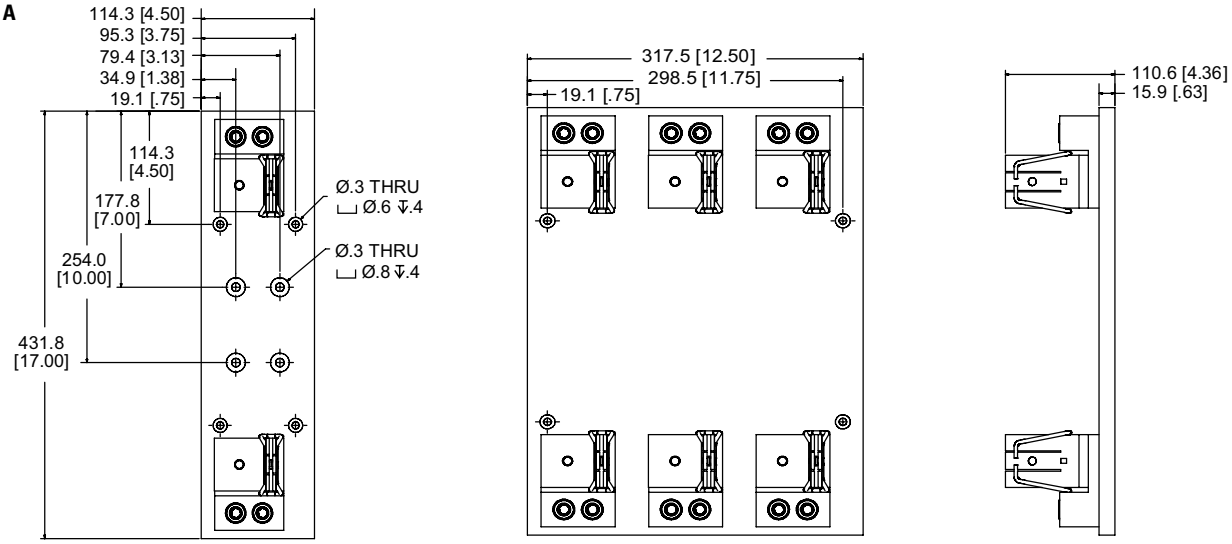

LF SERIES CLASS T FUSE BLOCKS

300 V • 600 V

Description

The Littelfuse Class T fuse blocks offer many advantages such as space saving design, universal mounting holes, snap-to-release DIN rail mounts and available covers.

Features/Benefits

- Space-saving design
- Universal mounting holes for easy replacement
- One hand release from DIN rail for 30–60 A fuses
- Reinforced fuse clips are standard
- Covers available for most amperages to enhance safety

Specifications

Voltage Ratings	300 VAC/600 VAC
Ampere Ratings	0 – 600 A
Leakage Current	<0.6 mA at 600 V
Withstand Rating	200 kA RMS SYM
Flammability Rating	UL94 V-0
Approvals	UL Listed (File No. E14721) CSA Certified (File No. LR7316)
Environmental	RoHS Compliant, Lead (Pb) Free

Recommended Fuses

300 V JLLN 26
600 V JLLS 26

Web Resources

Sample requests, downloadable CAD drawings and other technical information: **www.littelfuse.com/lft**
www.littelfuse.com/fuseblocks

Ordering Information (Class T 300 V)

AMP RATING	ORDERING NUMBER							TORQUE	WIRE RANGE	WIRE TYPE		BASE TEMP RATING	DIN RAIL MOUNT	COVER ORDERING NUMBER*
	BASE ORDERING NUMBER	POLES			TERMINAL SUFFIX									
		1	2	3	BOX LUG	PRESSURE PLATE	SCREW							
30	LFT30030	1	2	3	C	—	—	5.6 N-m (50 in-lbs) 2.8 N-m (25 in-lbs)	2-4 AWG 6-14 AWG	CU-AL	Solid/Stranded	125˚C	•	LFT30030FBC
60	LFT30060	1	2	3	C	—	—	5.6 N-m (50 in-lbs) 2.8 N-m (25 in-lbs)	2-4 AWG 6-14 AWG					LFT30060FBC
100	LFT30100	1	—	3	CS	—	—	13.6 N-m (120 in-lbs) 4.5 N-m (40 in-lbs) 4.0 N-m (35 in-lbs)	2/0-6 AWG 8 AWG 10-14 AWG			130˚C	—	LFT30100FBC
200	LFT30200	1	—	3	CS	—	—	31.1 N-m (275 in-lbs)	250 kcmil-6					—
400	LFT30400	1	—	3	CS	—	—	(2) 31.1 N-m (275 in-lbs)	250 kcmil-6					—
600	LFT30600	1	—	3	CS	—	—	(2) 42.4 N-m (375 in-lbs)	500 kcmil-6					—

Ordering Information (Class T 600 V)

AMP RATING	ORDERING NUMBER							TORQUE	WIRE RANGE	WIRE TYPE		BASE TEMP RATING	DIN RAIL MOUNT	COVER ORDERING NUMBER*
	BASE ORDERING NUMBER	POLES			TERMINAL SUFFIX									
		1	2	3	BOX LUG	PRESSURE PLATE	SCREW							
30	LFT60030	1	2	3	C	P	S	5.6 N-m (50 in-lbs) 2.8 N-m (25 in-lbs)	2-4 AWG 6-14 AWG	** see note	Solid/Stranded	125˚C	•	LFT60030FBC
60	LFT60060	1	2	3	C	—	—	5.6 N-m (50 in-lbs) 2.8 N-m (25 in-lbs)	2-4 AWG 6-14 AWG	CU-AL				LFT60060FBC
100	LFT60100	1	—	3	CS	—	—	13.6 N-m (120 in-lbs) 4.5 N-m (40 in-lbs) 4.0 N-m (35 in-lbs)	2/0-6 AWG 8 AWG 10-14 AWG			130˚C	—	LT60100FBC
200	LFT60200	1	—	3	CS	—	—	31.1 N-m (275 in-lbs)	250 kcmil-6					LT60200FBC
400	LFT60400	1	—	3	CS	—	—	(2) 31.1 N-m (275 in-lbs)	250 kcmil-6					LT60400FBC
600	LFT60600	1	—	3	CS	—	—	(2) 42.4 N-m (375 in-lbs)	500 kcmil-6					LT60600FBC

**Covers sold individually. One cover needed for each pole.*
***Wire Type for Pressure Plate and Screw Terminal is CU only*

© 2012 Littelfuse POWR-GARD® Products Catalog

LF SERIES CLASS T FUSE BLOCKS

Dimensions mm (inches)

300 V 30 A

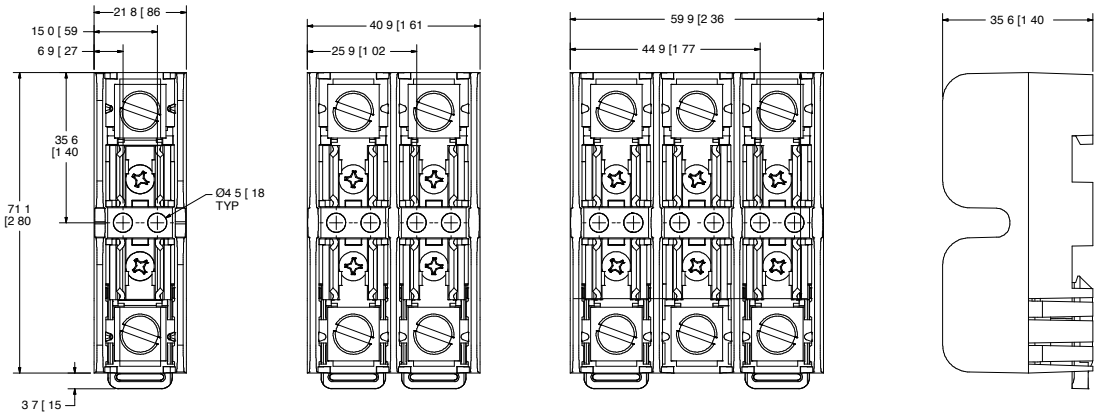

300 V 60 A

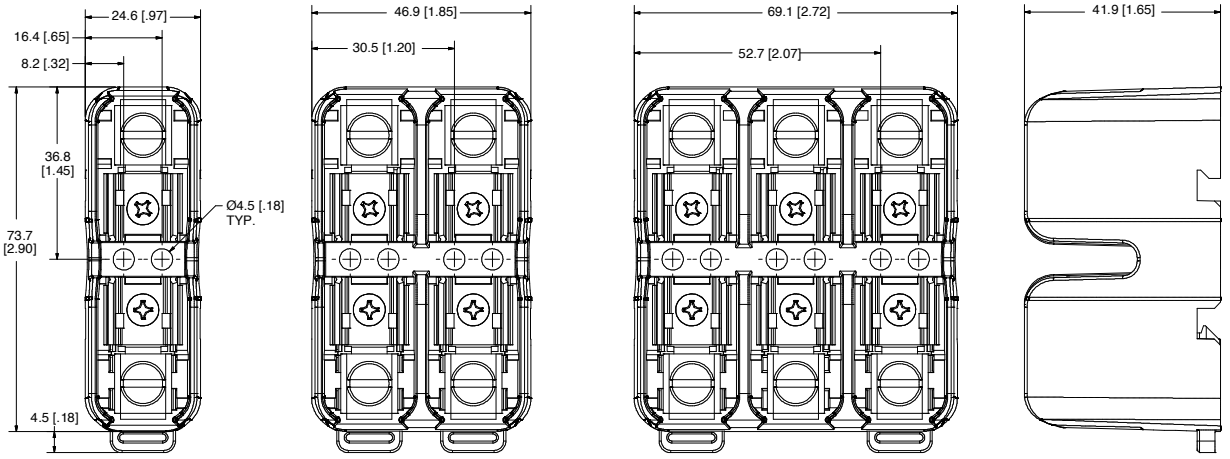

300 V 100 A

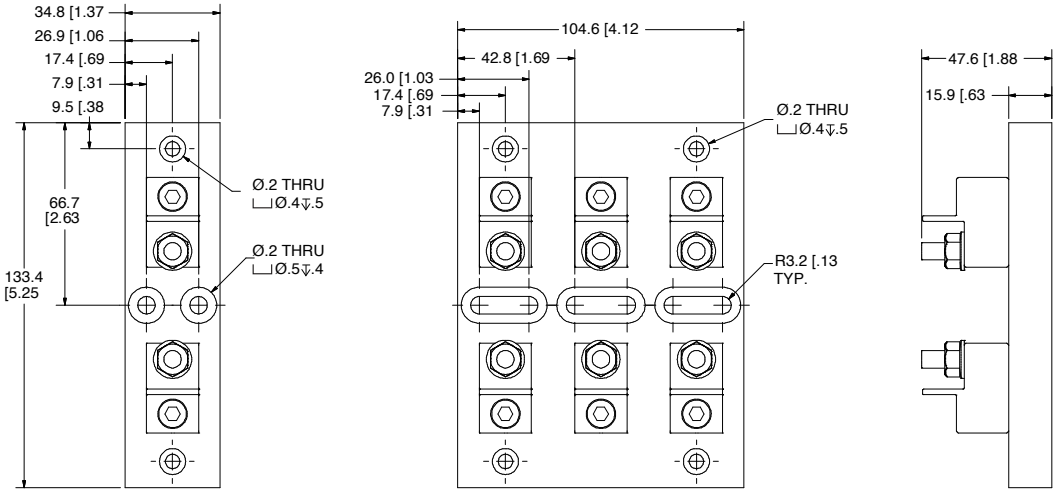

LF SERIES CLASS T FUSE BLOCKS

Dimensions mm (inches)

300 V 200 A

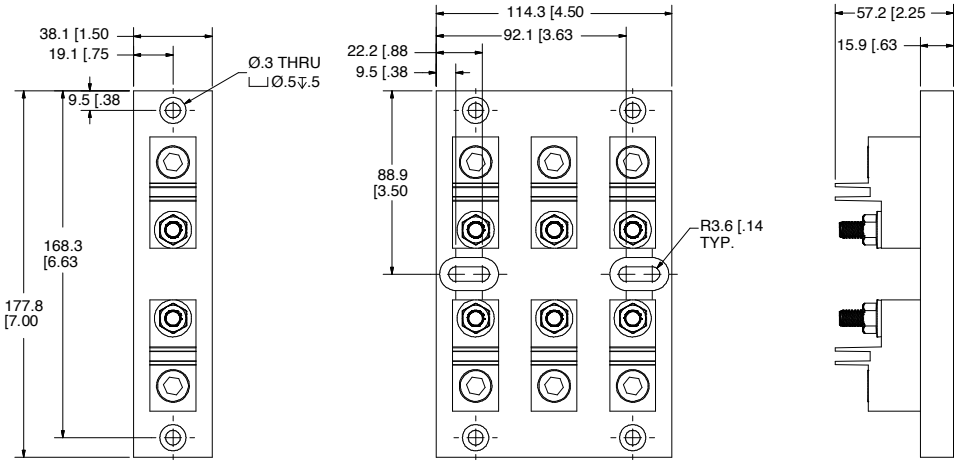

300 V 400 A

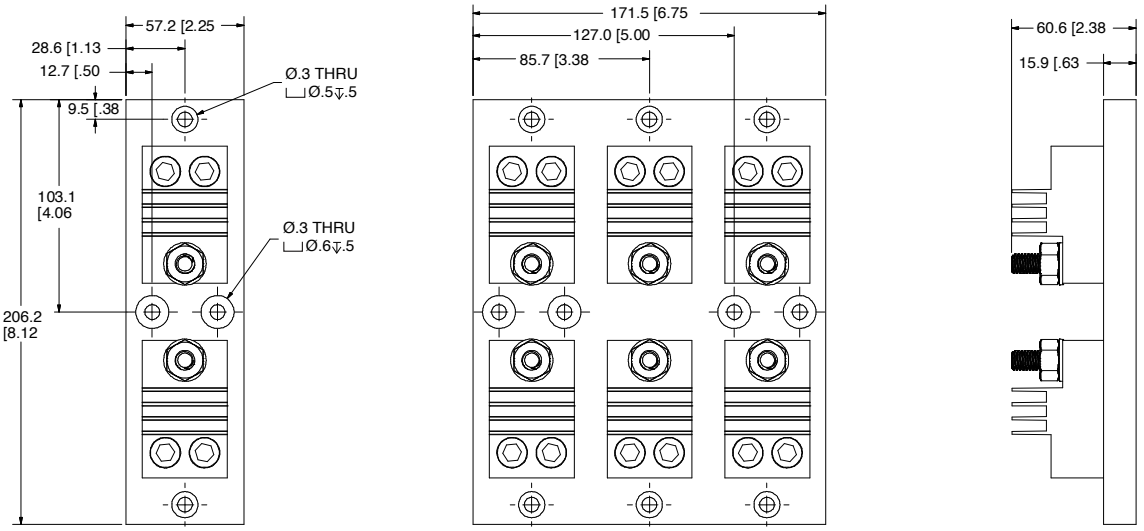

300 V 600 A

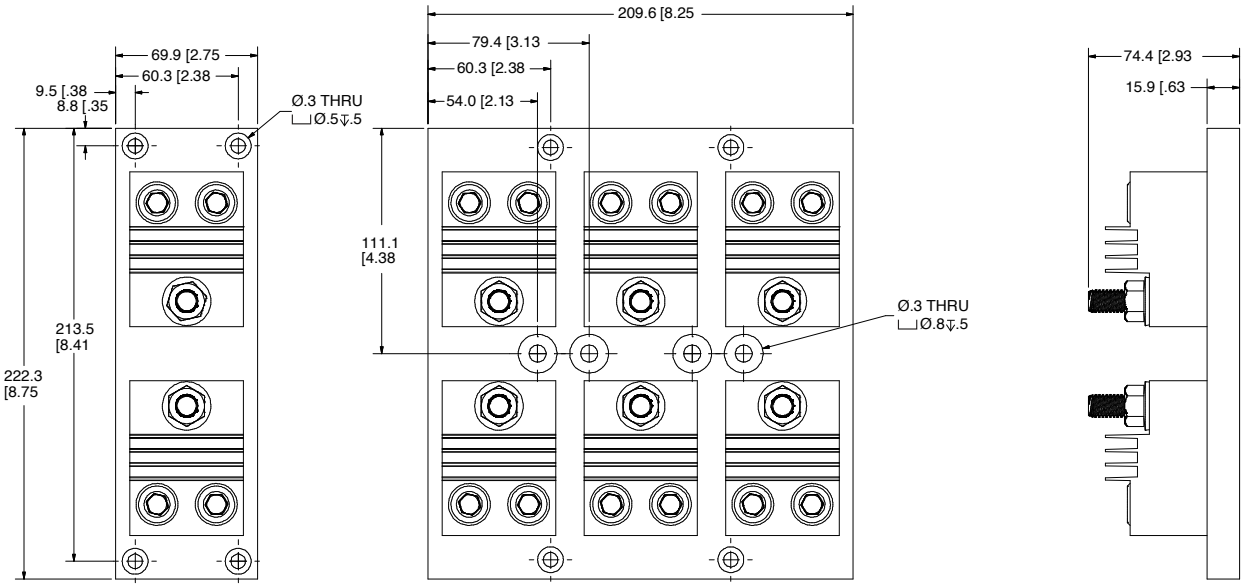

© 2012 Littelfuse POWR-GARD® Products Catalog

LF SERIES CLASS T FUSE BLOCKS

Dimensions mm (inches)

600 V 30 A

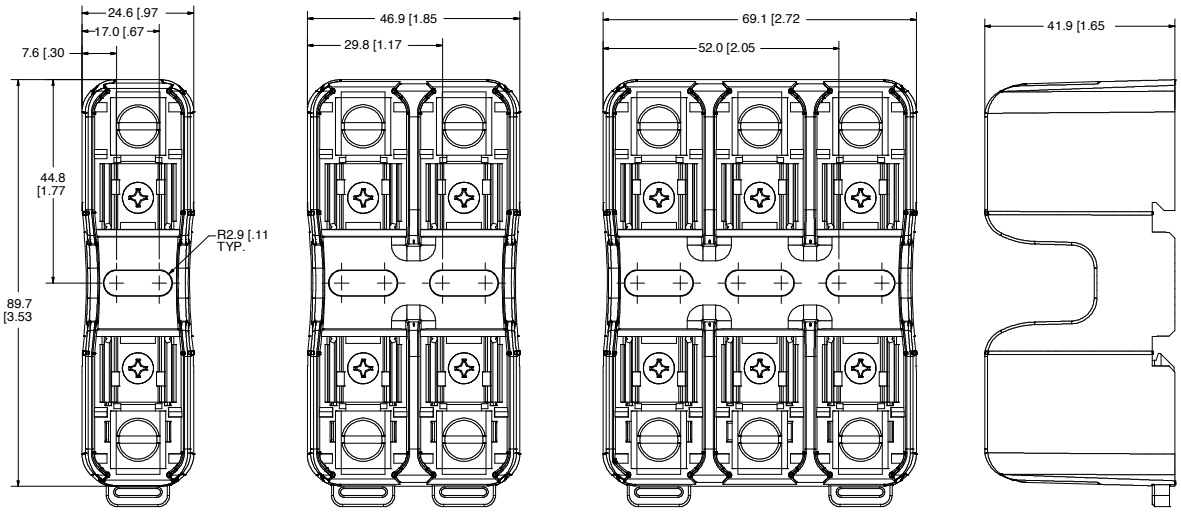

600 V 60 A

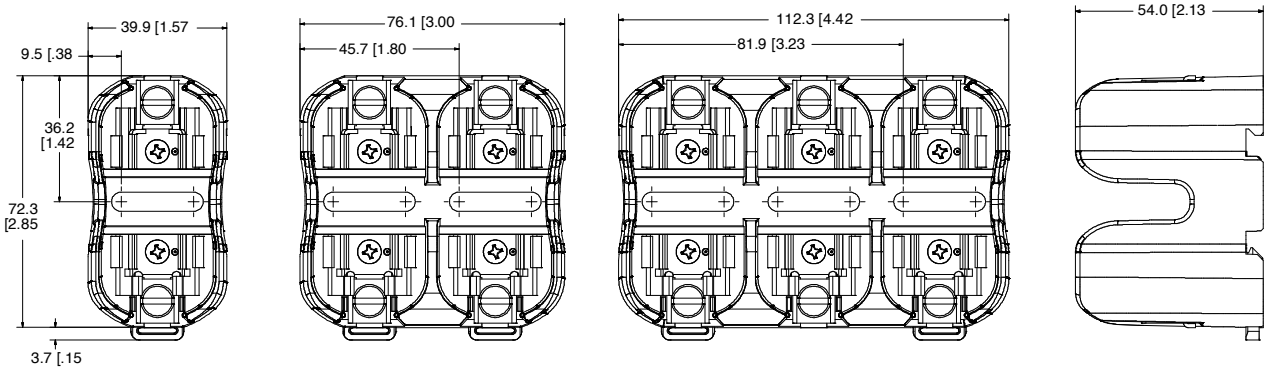

600 V 100 A

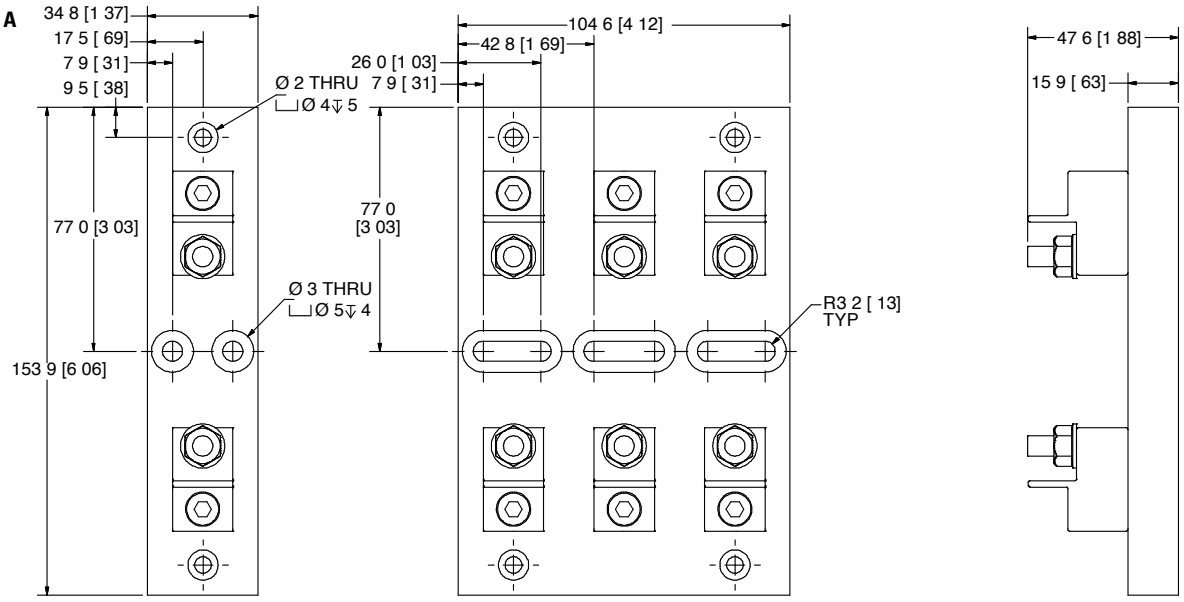

LF SERIES CLASS T FUSE BLOCKS

Dimensions mm (inches)

600 V 200 A

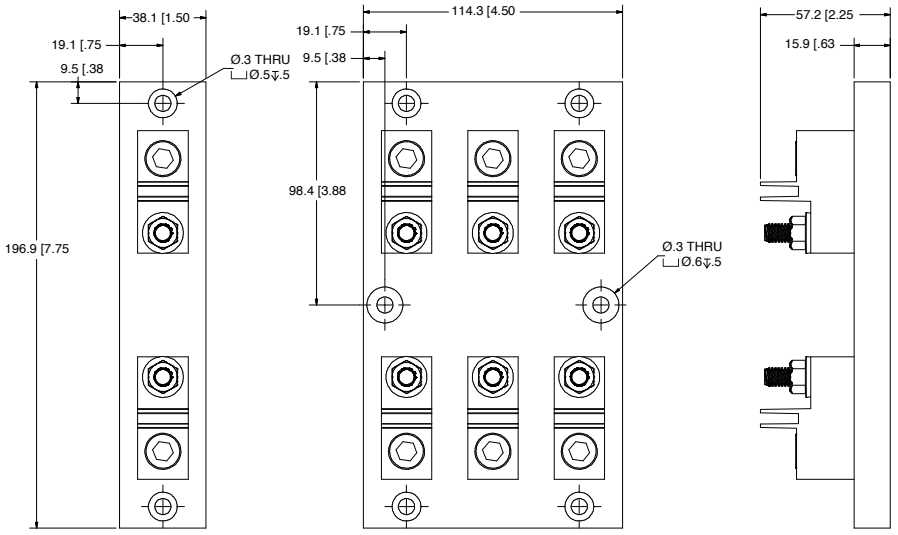

600 V 400 A

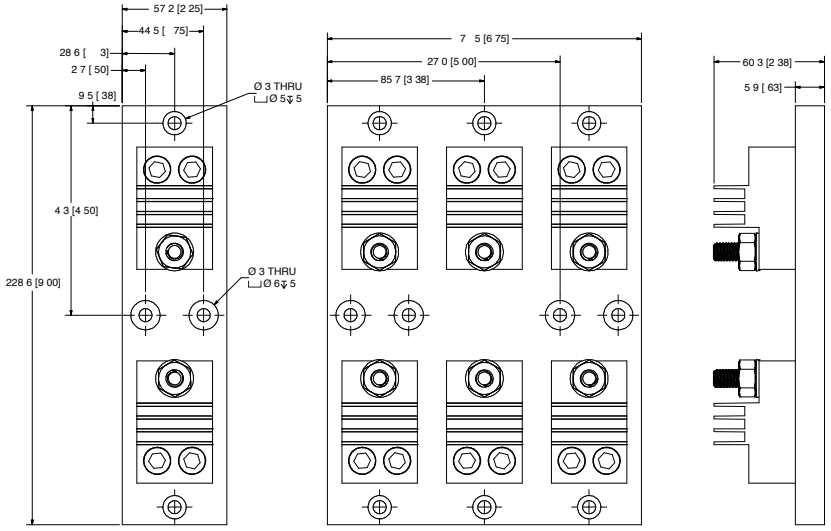

600 V 600 A

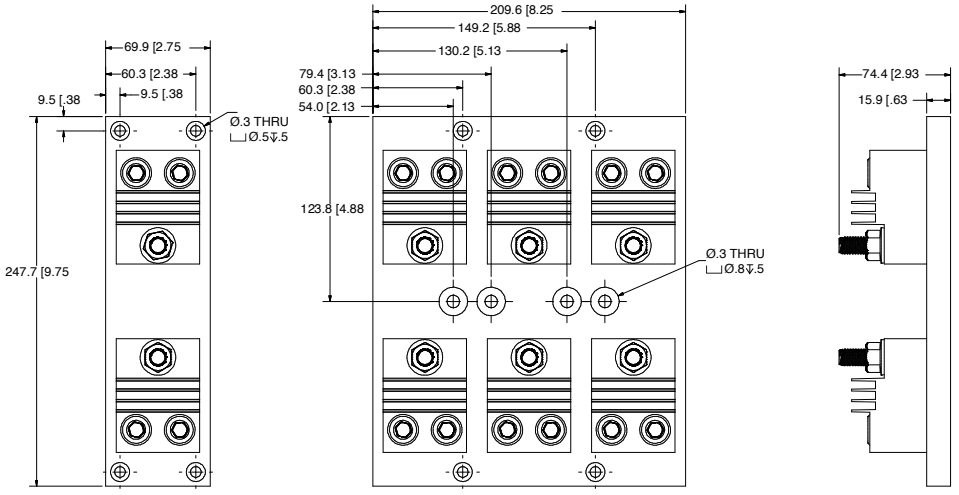

© 2012 Littelfuse POWR-GARD® Products Catalog

Littelfuse®
Expertise Applied | Answers Delivered

LF SERIES CLASS G FUSE BLOCKS

480 V • 600 V

Specifications

Voltage Ratings	600 VAC (0–20 A) 480 VAC (25–60 A)
Ampere Ratings	0–60 A
Flammability Rating	UL94 V-0
Approvals	UL Listed (File No. E14721) CSA Certified (File No. LR7091)

Recommended Fuses

Time Delay
Series: SLC 28

Web Resources

For additional technical information visit:
www.littelfuse.com/lfg
www.littelfuse.com/fuseblocks

Description

All Littelfuse Class G fuse blocks offer snap-to-release DIN rail mounting and universal mounting holes. Class G fuse blocks are designed for use with time-delay current limiting Class G fuses.

Features/Benefits

- Universal mounting holes for easy replacement
- One hand release from DIN rail for most amperages
- Meet requirements for branch circuit protection

Ordering Information (Class G 600 V)

AMP RATING	POLES	ORDERING NUMBER				WIRE TYPE		BASE TEMP RATING	DIN RAIL MOUNT	TERMINAL INFORMATION		
		BASE PART NUMBER	SUFFIX							TERMINAL	WIRE RANGE	TORQUE
			BOX LUG	PRESSURE PLATE	SCREW							
15	1	LFG600151	CDINR	PQDINR	SQDINR	CU Only	Solid/Stranded	150° C	•	Box Lug	6-14 AWG	4.0 N-m (35 in-lbs)
	2	LFG600152	CDINR	PQDINR	SQDINR					Pressure Plate	10-14 AWG	2.3 N-m (20 in-lbs)
	3	LFG600153	CDINR	PQDINR	SQDINR					Screw	10-14 AWG	2.3 N-m (20 in-lbs)
20	1	LFG600201	CDINR	PQDINR	SQDINR			150° C	•	Box Lug	6-14 AWG	4.0 N-m (35 in-lbs)
	2	LFG600202	CDINR	PQDINR	SQDINR					Pressure Plate	10-14 AWG	2.3 N-m (20 in-lbs)
	3	LFG600203	CDINR	PQDINR	SQDINR					Screw	10-14 AWG	2.3 N-m (20 in-lbs)

Ordering Information (Class G 480 V)

AMP RATING	POLES	ORDERING NUMBER				WIRE TYPE		BASE TEMP RATING	DIN RAIL MOUNT	TERMINAL INFORMATION		
		BASE PART NUMBER	SUFFIX							TERMINAL	WIRE RANGE	TORQUE
			BOX LUG	PRESSURE PLATE	SCREW							
30	1	LFG480301	CDINR	PQDINR	SQDINR	CU Only	Solid/Stranded	150° C	•	Box Lug	6-14 AWG	4.0 N-m (35 in-lbs)
	2	LFG480302	CDINR	PQDINR	SQDINR					Pressure Plate	10-14 AWG	2.3 N-m (20 in-lbs)
	3	LFG480303	CDINR	PQDINR	SQDINR					Screw	10-14 AWG	2.3 N-m (20 in-lbs)
60	1	LFG480601	CDINR	—	—	CU/Al		125° C	•	Box Lug	2-4 AWG	5.6 N-m (50 in-lbs)
	2	LFG480602	CDINR	—	—						6-14 AWG	2.8 N-m (25 in-lbs)
	3	LFG480603	CDINR	—	—							

LF SERIES CLASS G FUSE BLOCKS

Dimensions mm (inches)

600 V 15 & 20 A
480 V 30 A

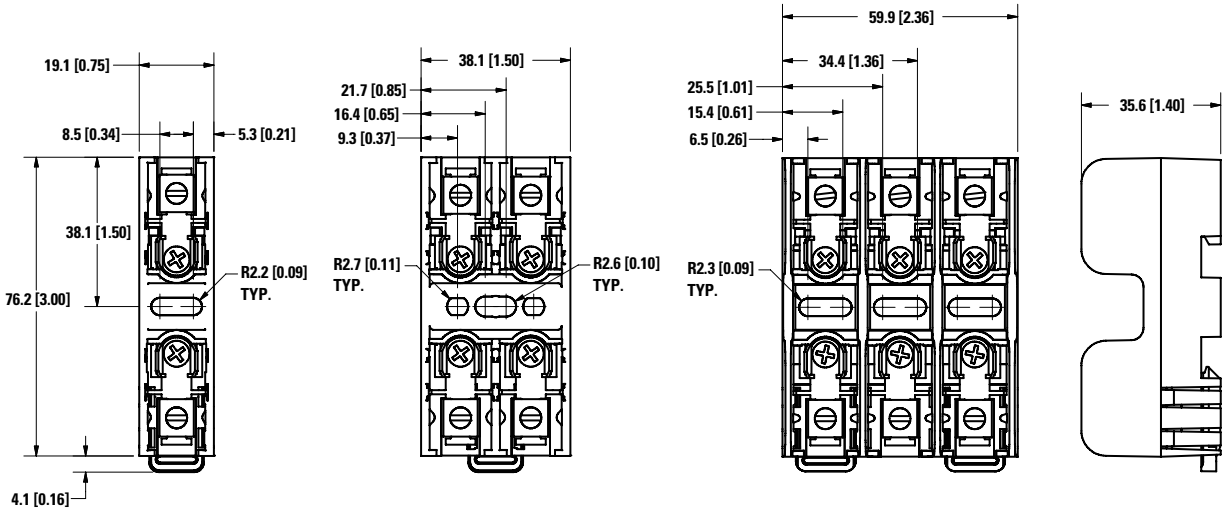

480 V 60 A

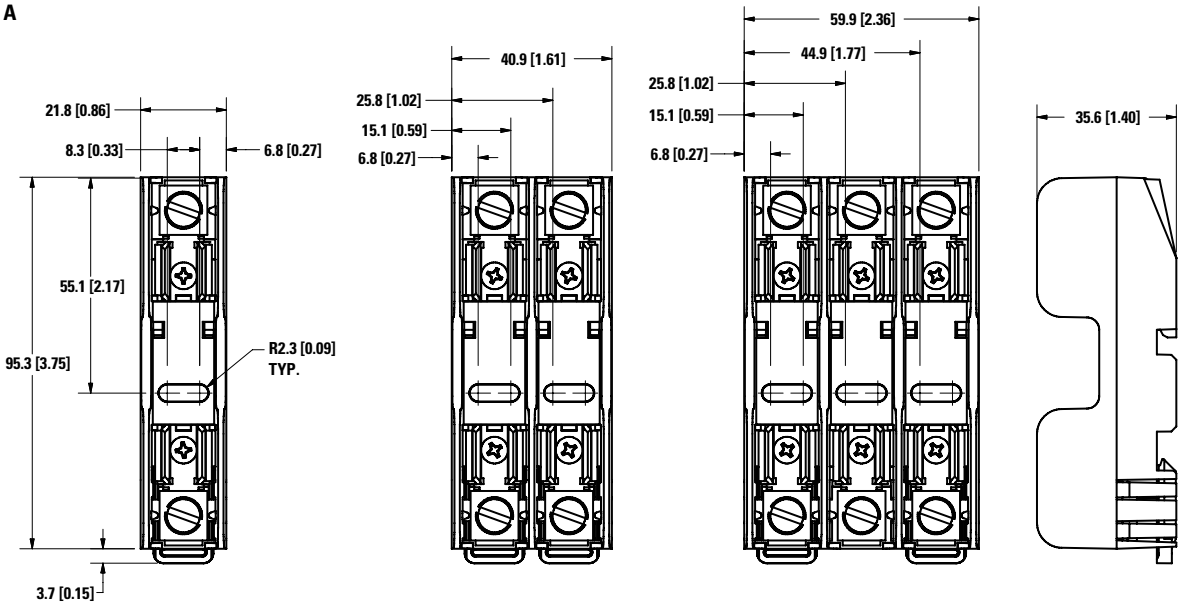

© 2012 Littelfuse POWR-GARD® Products Catalog

Littelfuse
Expertise Applied | Answers Delivered

LF SERIES CLASS CC/CD AND MIDGET (10X38 mm) FUSE BLOCKS

600 V

Description

The Littelfuse Class CC, CD and midget blocks offer generous space savings and enhanced value. DIN rail mounting and universal mounting holes are all available. Indication feature on all Class CD fuse blocks.

Features/Benefits

- Space-saving design
- Universal mounting holes for easy replacement
- Indication offered on CD blocks
- One hand release from DIN rail optional
- Rejection feature that prevents the insertion of fuses with lower interrupting rating or voltage ratings
- Clip design reduces resistance and heat
- Non DIN Rail fuse blocks have interlocking feature allowing ganging for any number of poles
- Covers available for all amperages to enhance safety

Specifications

Voltage Rating	600 VAC/600 VDC
Ampere Ratings	Class CC: 30 A Class CD: 60 A
Dielectric strength	1200 V minimum
Clip/terminals	Tin-plated copper alloy
Box lug	Copper
Screw and captive pressure plate	Zinc-plated steel
Base	Thermoplastic UL94 V-0 flammability rating
Approvals	Class CC/CD: UL Listed (File No. E14721) Class CD: CSA Certified (File No. LR73091) Class CC: CSA Certified (File No. LR7316) Midget: UL Recognized (File No. E14721)
Environmental	RoHS Compliant, Lead (Pb) Free

Recommended Fuses

Class CC Blocks:
CCMR 29
KLDR, KLKR 30

Class CD Blocks:
CCMR 29

Midget Blocks:
BLF, BLN, BLS, FLA, FLM,
FLQ, FLU, KLK, KLKD, KLQ 32

Web Resources

Sample requests, downloadable CAD drawings, fuse block cover datasheet and other technical information:
www.littelfuse.com/fuseblocks

Ordering Information (Class CC and Midget 30 A)

AMP RATING	POLES	CLASS CC ORDERING NUMBER		MIDGET ORDERING NUMBER		CONNECTOR TYPE	TORQUE	WIRE RANGE	WIRE TYPE	BASE TEMP	COVER ORDERING NUMBER**
		NON-DIN*	DINR	NON-DIN*	DINR						
30	1	L60030C1C	L60030C1CDINR	L60030M1C	L60030M1CDINR	Box Lug	5.6 N-m (50 in-lbs)	2-4 AWG	CU-AL Solid / Stranded	125°C	SPL001
	2	L60030C2C	L60030C2CDINR	L60030M2C	L60030M2CDINR		2.8 N-m (25 in-lbs)	6-14 AWG			
	3	L60030C3C	L60030C3CDINR	L60030M3C	L60030M3CDINR						
30	1	L60030C1PQ	L60030C1PQDINR	L60030M1PQ	L60030M1PQDINR	Pressure Plate w/Q.C. Terminal	5.6 N-m (50 in-lbs)	2-4 AWG	CU-AL Solid / Stranded	125°C	SPL001
	2	L60030C2PQ	L60030C2PQDINR	L60030M2PQ	L60030M2PQDINR		2.8 N-m (25 in-lbs)	6-14 AWG			
	3	L60030C3PQ	L60030C3PQDINR	L60030M3PQ	L60030M3PQDINR						
30	1	L60030C1SQ	L60030C1SQDINR	L60030M1SQ	L60030M1SQDINR	Screw w/Q.C. Terminal	5.6 N-m (50 in-lbs)	2-4 AWG	CU-AL Solid / Stranded	125°C	SPL001
	2	L60030C2SQ	L60030C2SQDINR	L60030M2SQ	L60030M2SQDINR		2.8 N-m (25 in-lbs)	6-14 AWG			
	3	L60030C3SQ	L60030C3SQDINR	L60030M3SQ	L60030M3SQDINR						

Ordering Information (Class CD 60 A)

AMP RATING	POLES	ORDERING NUMBER	CONNECTOR TYPE	TORQUE	WIRE RANGE	WIRE TYPE	BASE TEMP RATING	DIN RAIL MOUNT	INDICATION	COVER ORDERING NUMBER**
60	1	LFC600601CID	Box Lug	5.6 N-m (50 in-lbs)	2-4 AWG	CU-AL Solid / Stranded	125°C	•	•	LFC60060FBC
	2	LFC600602CID		2.8 N-m (25 in-lbs)	6-14 AWG					
	3	LFC600603CID								

* Gangable
***Covers sold individually. One cover needed for each pole.*
Note: Quick Connect Terminals are rated at 20 A

LF SERIES CLASS CC/CD AND MIDGET (10X38 mm) FUSE BLOCKS

Dimensions mm (inches)

CLASS CC / MIDGET DIN RAIL 600 V 30 A

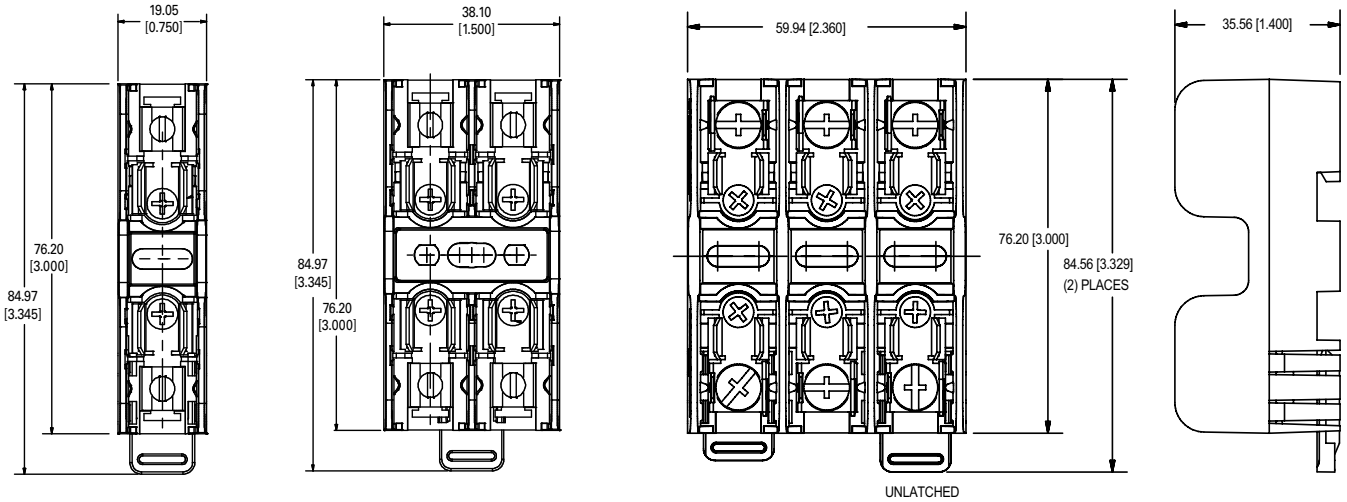

CLASS CC / MIDGET NON-DIN RAIL 600 V 30 A

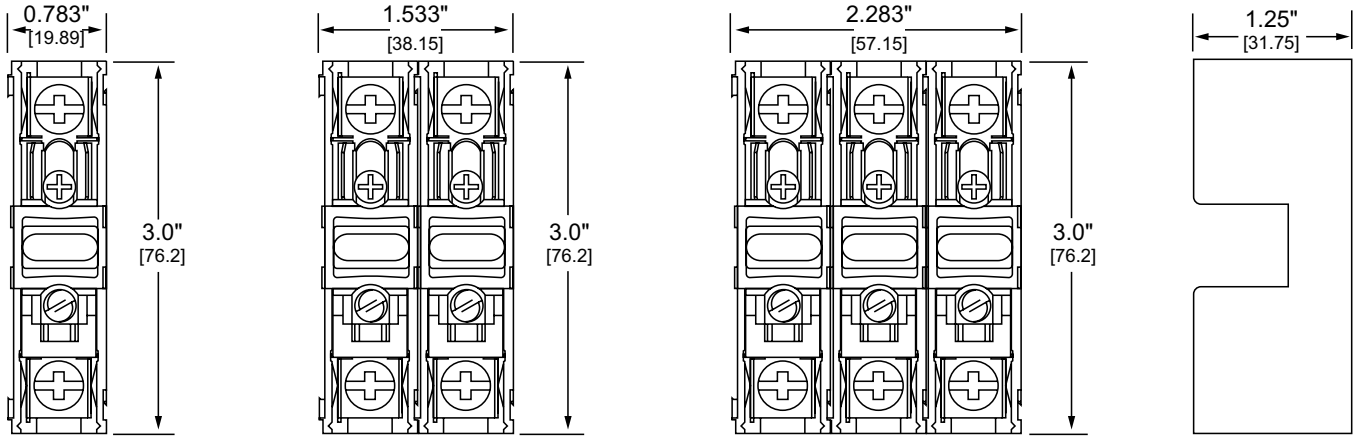

CLASS CD DIN RAIL 600 V 60 A

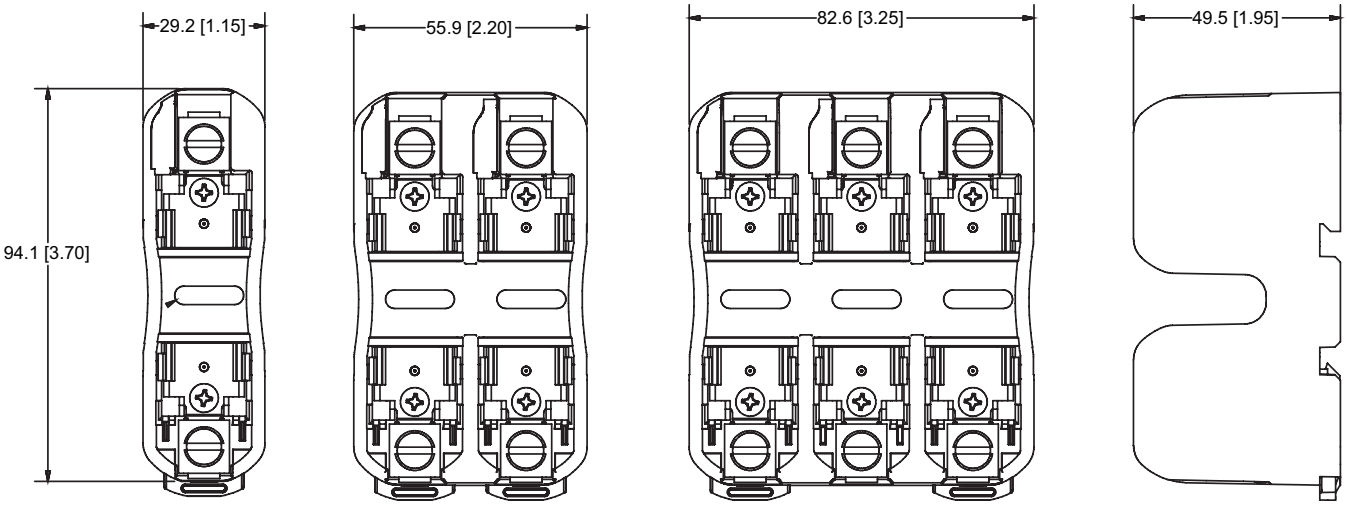

© 2012 Littelfuse POWR-GARD® Products Catalog

Littelfuse®
Expertise Applied | Answers Delivered

BOARD MOUNT MIDGET (10X38 mm) FUSE HOLDER

600 V

Description

The PC board-mounted midget fuse holder is a one-piece holder designed to provide a more robust and secure solution. It offers a smaller footprint and flexible mounting options.

For use with Midget-style fuses and fuse covers, it is UL Recognized and can be covered for additional protection.

Features/Benefits

- Through hole PCB mounting
- Robust and secure block design
- All-in-one package offers easy installation
- Space saving footprint
- Touch Safe cover/puller available
- 3-pole configurations

Applications

- HVAC market
- Industrial manufacturing
- Mass production facilities

SPL001PCB Cover

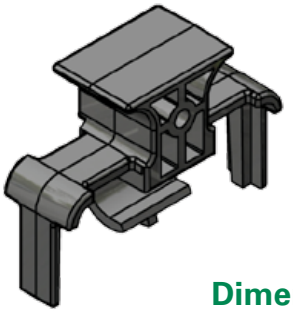

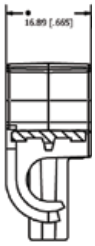

Dimensions mm (inches)

Specifications

Voltage Rating	600 VAC/600 VDC
Amperage Rating	30 A
Approval	UL Recognized (File No. E14721)
Mounting Method	Through hole solder/PCB

Ordering Information

	CATALOG NUMBER	ORDERING NUMBER
Block	L60030M3PCB	L60030M3PCB
Cover*	SPL001PCB	SPL0001PCBT

*Covers are single pole—need to order a quantity of 3 for each block.

Recommended Fuses

Midget (10 x 38 mm) series 32

Web Resources

For additional technical information visit:
www.littelfuse.com/fuseblocks

Dimensions mm (inches)

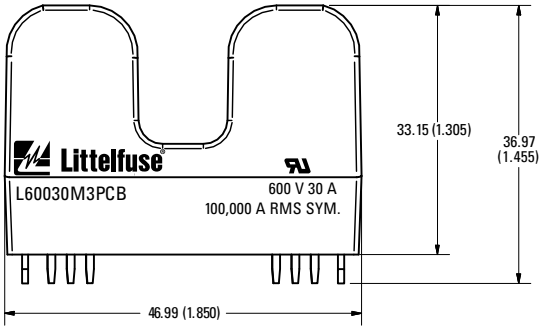

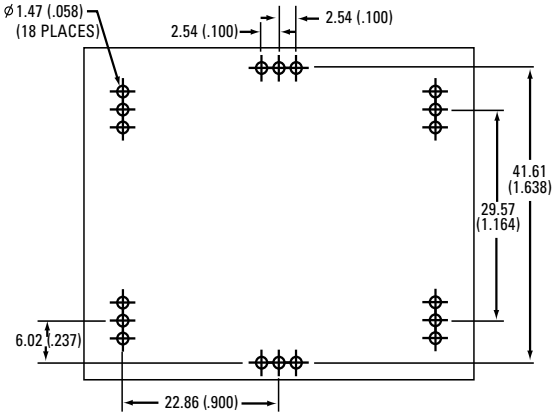

CLASS CC AND MIDGET FUSE BLOCK ACCESSORIES

FBDIN1 Rail Adapter

Features/Benefits

- DIN Rail adaptor for 30 A Midget, Class CC and Class G fuse blocks
- Patented design with no tools necessary for installation
- Permits snap-mounting of Class CC, Class G and Midget 30 A fuse blocks to standard and low profile 35 mm symmetrical DIN rails and 32 mm asymmetrical DIN rails
- Easy removal via disconnect tab

Web Resources

For additional technical information visit:
www.littelfuse.com/fbdin1

Dimensions Inches

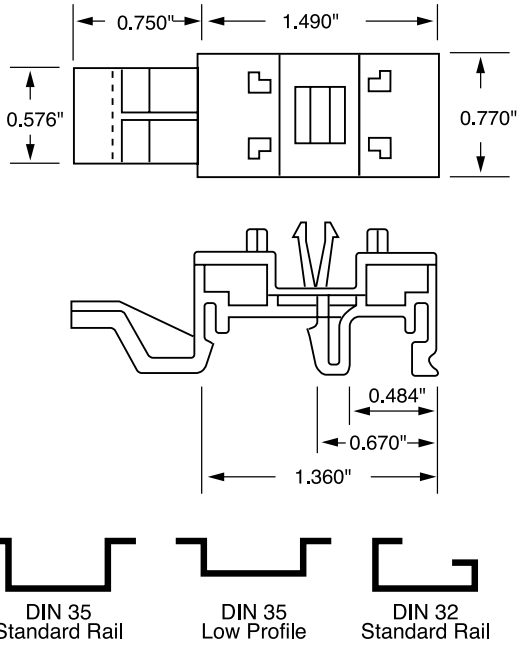

Recommended Fuse Blocks

Midget-Style and Class CC 32
Class G 28

New DIN rail mountable fuse holders available on page 99

SPL001 Cover Puller

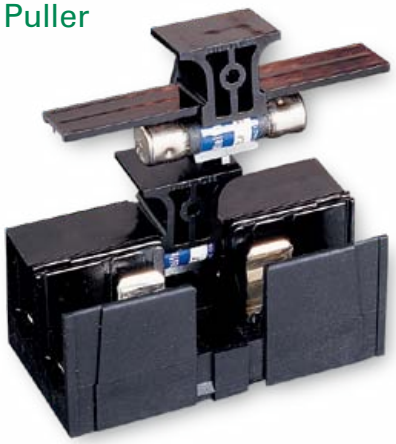

Features/Benefits

- 600 V 1/10-30 A Class CC and Midget fuse cover puller that offers increased protection when removing fuses
- Simple removal without the need for a separate puller
- Meets Dead Front requirements
- Easily gangable with 5/16" diameter wire
- For use with all 600 V Class CC and Midget 1/10-30 A fuses
- Label provided for easy fuse identification

Dimensions Inches

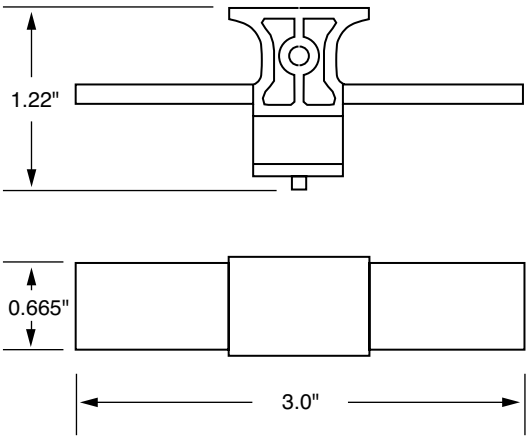

Recommended Fuse Blocks

L60030C 99
L60030M 99

Web Resources

For additional technical information visit:
www.littelfuse.com/spl001

© 2012 Littelfuse POWR-GARD® Products Catalog

Littelfuse®
Expertise Applied | Answers Delivered

LF SERIES FUSE BLOCK COVERS

Specifications

Connection	Snap to fuse body
Molded Base	Black thermoplastic
Flammability Rating	UL94 V-0
Approvals	UL Listed (File No. E184929)
CSA Certified	(File No. 007316_0_000 Class 6225-01)

Features/Benefits

- Added safety to personnel
- Ventilated to avoid fuse derating
- Reusable
- UL listed and CSA certified
- Available for Class H/R, Class J, Class T and Class CD
- Convenient snap-on feature
- Allows visibility of indicator fuse block light

Web Resources

Downloadable CAD drawings, dimensions and other technical information, visit
www.littelfuse.com/fuseblocks

Description

Littelfuse fuse block covers protect personnel from accidentally coming into contact with energized parts. Covers are for use with various UL class fuse blocks. Please, review the ordering information for available covers.

Ordering Information

UL CLASS	FUSE BLOCK BASE PART NUMBER*	VOLTAGE	AMPERAGE	COVER ORDERING NUMBER
Class H/R	LFH25030 / LFR25030	250	30	LFH25030FBC
Class H/R	LFH25060 / LFR25030	250	60	LFH25060FBC
Class H/R	LFH25100 / LFR25100	250	100	LFH25100FBC
Class H/R	LFH60030 / LFR60030	600	30	LFH60030FBC
Class H/R	LFH60060 / LFR60060	600	60	LFH60060FBC
Class H/R	LFH60100 / LFR60100	600	100	LFH60100FBC
Class J	LFJ60030	600	30	LFJ60030FBC
Class J	LFJ60060	600	60	LFJ60060FBC
Class J	LFJ60100	600	100	LFJ60100FBC
Class T	LFT30030	300	30	LFT30030FBC
Class T	LFT30060	300	60	LFT30060FBC
Class T	LFT30100	300	100	LFT30100FBC
Class T	LFT60030	600	30	LFT60030FBC
Class T	LFT60060	600	60	LFT60060FBC
Class T	LFT60100	600	100	LT60100FBC
Class T	LFT60200	600	200	LT60200FBC
Class T	LFT60400	600	400	LT60400FBC
Class T	LFT60600	600	600	LT60600FBC
Class CD	LFC60060	600	60	LFC60060FBC
Class CC	L60030C	600	30	SPL001

* Part number shown excludes reference to number of poles and terminal type

LF SERIES SOLAR FUSE BLOCK

1000 VDC

Description

The LFJ 1000 V fuse block is specifically designed for the Littelfuse SPFJ 1000 V Solar Fuse. It meets UL electrical characteristic requirements and is available in multiple amperages.

Features/Benefits

- Narrow width increases space savings
- Range of amperages to match all SPFJ fuse options
- Box Lug termination style accommodates a wide range of cable sizes
- Stud-mounted option increases convenience
- Approval for use with copper or aluminum lugs allowing for design flexibility

Specifications

Voltage Ratings	1000 VDC
Ampere Ratings	100 A, 200 A, 400 A, 450 A
Flammability Rating	UL94 V-0
Termination Type	Box Lug
Base Temp Rating	130° C
Approvals	UL 4248-18 Listed File No. E345481 Vol. 1
Environmental	RoHS Compliant

Recommended Fuses

SPFJ Solar Series 61

Web Resources

Sample requests, downloadable CAD drawings, dimensions and other technical information:
www.littelfuse.com/fuseblocks

For a comprehensive overview of solar market solutions, visit: **www.littelfuse.com/solar**

Ordering Information (1000 V)

AMPERAGE	ORDERING NUMBER	DC INTERRUPT RATING	WIRE RANGE STANDARD (METRIC)	WIRE TYPE		RECOMMENDED TORQUE
200	LFJ102001C	20 kA	250 kcmil - #6 (127mm² - 16mm²)	Cu/Al	Solid/Stranded	31.1 N-m (275 in-lb)
400	LFJ104001C	10 kA	350 kcmil - 1/0 (177mm² - 55mm²)	Cu/Al	Solid/Stranded	31.1 N-m (275 in-lb)
450	LFJ104501C	20 kA	500 kcmil - #4 (253mm² - 25mm²)	Cu/Al	Solid/Stranded	42.4 N-m (375 in-lb)

Ordering Information (Stud-Mounted 1000 V)

AMPERAGE	ORDERING NUMBER	SCCR RATING	RECOMMENDED TORQUE		MAX. BUSBAR THICKNESS	BASE TORQUE	
			FUSE	TERMINAL		BOLT SIZE	TORQUE
100	LFJ101001STST	10 kA	7.3 N-m (65 in-lb)	22.6 N-m (200 in-lb)	19.66 mm (.774")	1/4" 5/16"	30-40 lb-in 40-50 lb-in
200	LFJ102001STST	20 kA	7.3 N-m (65 in-lb)	22.6 N-m (200 in-lb)	19.66 mm (.774")		
400	LFJ104001STST	10 kA	19.2 N-m (170 in-lb)	22.6 N-m (200 in-lb)	14.10 mm (.555")		
450	LFJ104501STST	20 kA	33.9 N-m (300 in-lb)	33.9 N-m (300 in-lb)	14.48 mm (.570")		

Look for this logo to indicate products that are used in solar applications. Visit our website **www.littelfuse.com/solar** for the latest updates on approvals, certifications, and new products.

© 2012 Littelfuse POWR-GARD® Products Catalog

LF SERIES SOLAR FUSE BLOCK

1000 VDC

Dimensions mm (inches)

1000 V 200 A

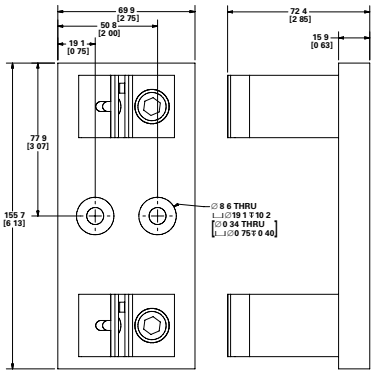

1000 V 400 A

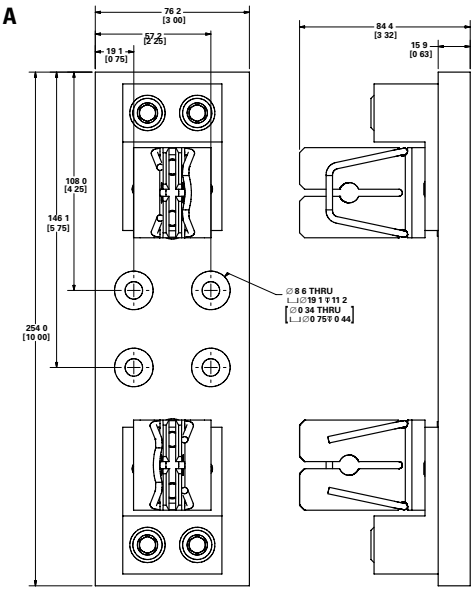

1000 V 450 A

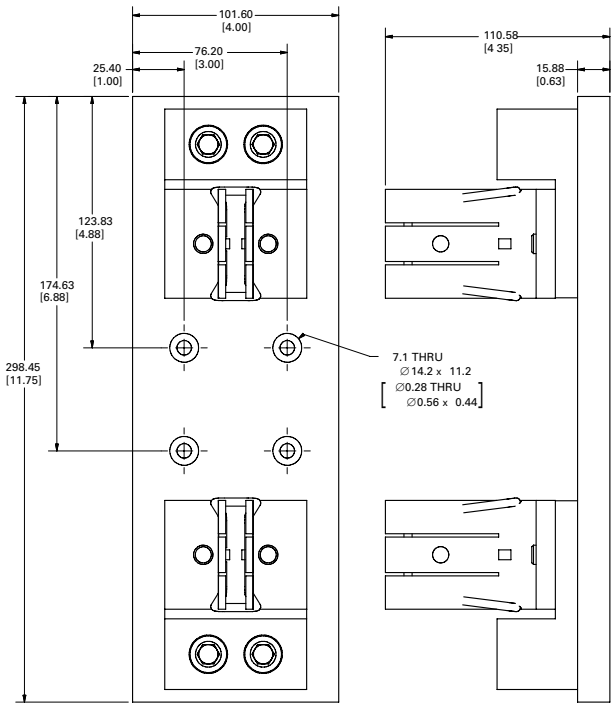

Look for this logo to indicate products that are used in solar applications. Visit our website **www.littelfuse.com/solar** for the latest updates on approvals, certifications, and new products.

LF SERIES SOLAR FUSE BLOCK

1000 VDC

Dimensions mm (inches)

Stud-Mounted 1000 V 100 A

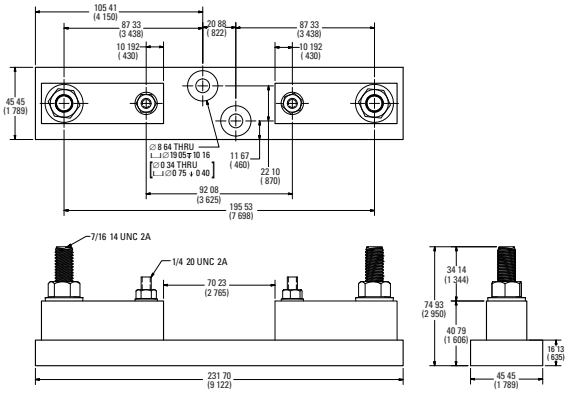

Stud-Mounted 1000 V 200 A

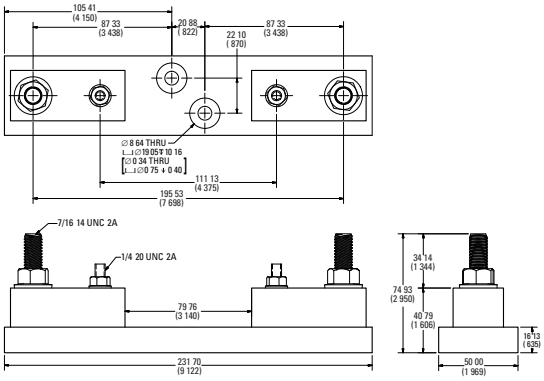

Stud-Mounted 1000 V 400 A

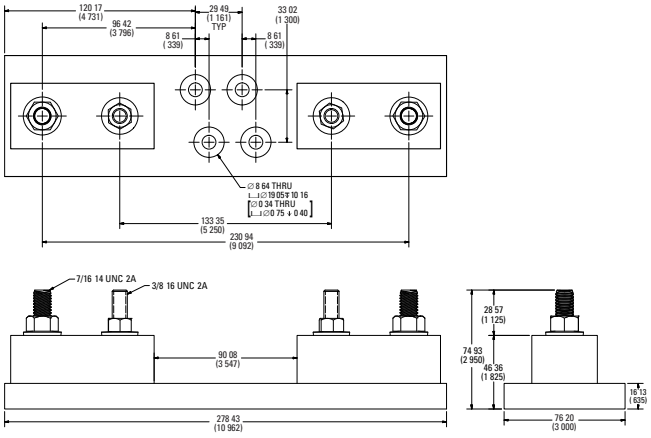

Stud-Mounted 1000 V 450 A

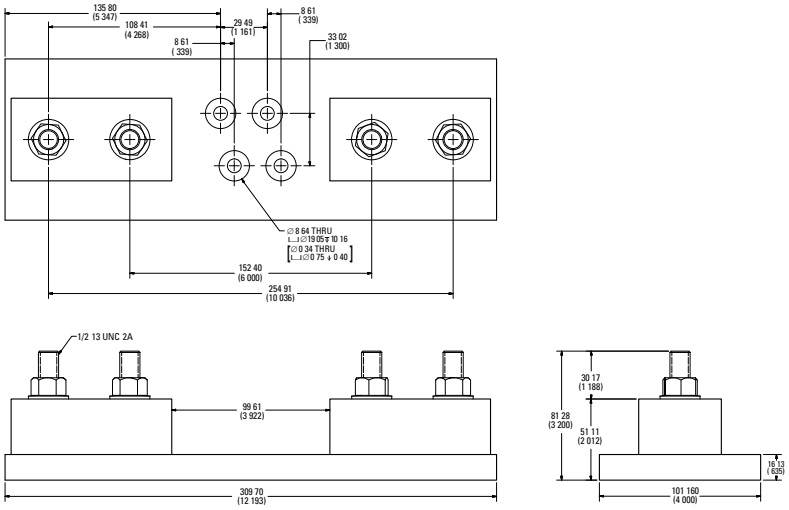

Look for this logo to indicate products that are used in solar applications. Visit our website **www.littelfuse.com/solar** for the latest updates on approvals, certifications, and new products.

© 2012 Littelfuse POWR-GARD® Products Catalog

Littelfuse®
Expertise Applied | Answers Delivered

UP-LINK™ REMOTE INDICATION FUSE HOLDER

600 V

Description

The Littelfuse Up-LINK remote indicating fuse holder can be easily integrated with a PLC to offer remote notification when a fuse has opened. Accompanied with local LED indication, this reduces downtime by allowing instant communication and helping plant and maintenance personnel to quickly fix the problem.

Features/Benefits

- Cost effective solution for remote blown-fuse indication
- Easily integrates with an existing PLC or system
- Utilizes reliable solid state circuitry
- Meets stringent IEC and UL Touch-Safe Standards to improve worker safety

Web Resources

Training videos, downloadable CAD drawings, industry downtime reports and other technical information:
www.littelfuse.com/up-link

Recommended Fuses

Class CC 29
Midget-Style (10 x 38 mm) 32

Dimensions mm (inches)

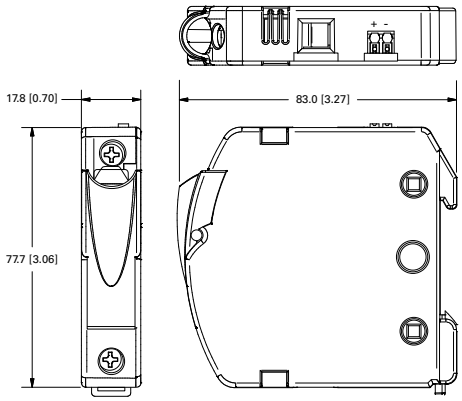

Specifications

Voltage Rating	600 VAC/DC
Amperage	30 A max
SCCR	200 kA AC (Class CC) 20 kA DC 100 kA (KLK Midget)
Terminal Type	Pressure Plate
Terminal Torque	17.7 in-lbs
Wire Range	#8–#14 CU Stranded #10–#14 CU Solid
Flammability Rating	UL94 V-0
Approvals	Class CC: UL Listed (File No. E14721) Midget: UL Recognized (File No. E14721) CSA Certified (File No. LR 7316)

Remote Indicating Circuit

Output (open fuse)	Open Collector
Max Current Sink	25 mA (28 VDC Max)
Terminals	Push In
Wire Range	#16–#24 CU Solid/Stranded
Suggested Insulation Strip Length	8 mm (0.31 in)

Ordering Information

POLES	PART NUMBER	ORDERING NUMBER
CLASS CC		
1	LINK001C	LINK001C.Z
2	LINK002C	LINK002C.Z
3	LINK003C	LINK003C.Z
MIDGET 10 X 38 mm		
1	LINK001M	LINK001M.Z
2	LINK002M	LINK002M.Z
3	LINK003M	LINK003M.Z

Quick-Link Daisy Chain Connector

Littelfuse Quick-LINK daisy chain connectors provide optimal utilization of multiple Up-LINK remote indicating fuse holders when integrated with a PLC. These products are used to daisy chain multiple Up-LINK units together and reduce the number of PLC I/O ports required.

Ordering Information

POLES	TYPE	ORDERING NUMBER
3	Base	QLINK3B.Z
9	Extender	QLINK9E.Z

LPSC / LPSM POWR-SAFE FUSE HOLDERS

600 V

Description

Littelfuse POWR-SAFE Dead Front holders provide optimum protection to personnel for Class CC and Midget-Style fuses.

Dimensions Inches (mm)

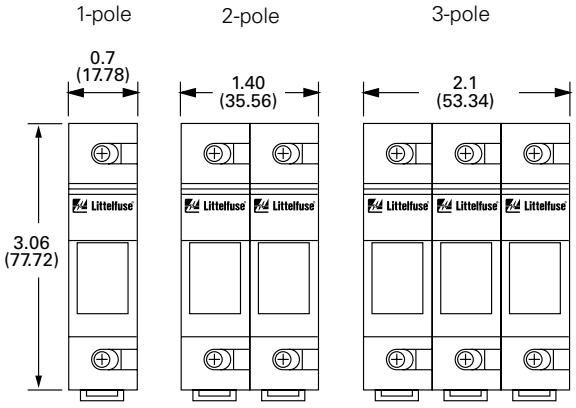

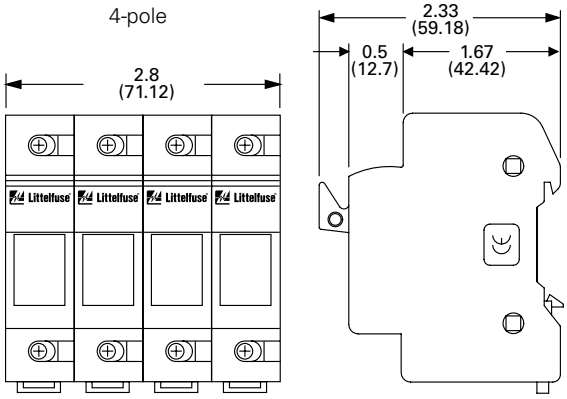

Features/Benefits

- Indicating and non-indicating options available
- 1-, 2-, 3- and 4-pole configurations
- Easy installation and fuse removal with no additional pullers or tools required
- 35 mm DIN Rail Mountable
- Ventilated design for cooler operation

Specifications

Voltage Rating	600 VAC/DC
Ampere Rating	30 A
Interrupting Rating	200 kA (Class CC) 100 kA (Midget)
Terminal Type	Pressure plate
Suggested Torque	17.7 in–lbs
Wire Range	#8–#14 CU
Material	Thermoplastic
Flammability Rating	UL94 V-0
Approvals	UL Listed (LPSC File No. E14721) UL Recognized (LPSM File No. E14721) CSA Certified (LPSC/LPSM File No. LR7316)
Environmental	RoHS compliant

Ordering Information

INDICATING CATALOG/ORDERING#		NON-INDICATING CATALOG/ORDERING#		FUSE TYPE	POLES
LPSC001ID	LPSC0001ZXID	LPSC001	LPSC0001Z	Class CC	1
LPSC002ID	LPSC0002ZXID	LPSC002	LPSC0002Z	Class CC	2
LPSC003ID	LPSC0003ZXID	LPSC003	LPSC0003Z	Class CC	3
LPSC004ID	LPSC0004ZXID	LPSC004	LPSC0004Z	Class CC	4
LPSM001ID	LPSM0001ZXID	LPSM001	LPSM0001Z	Midget	1
LPSM002ID	LPSM0002ZXID	LPSM002	LPSM0002Z	Midget	2
LPSM003ID	LPSM0003ZXID	LPSM003	LPSM0003Z	Midget	3
LPSM004ID	LPSM0004ZXID	LPSM004	LPSM0004Z	Midget	4

Multi-pole Assembly Kit Ordering No. CYHP001
(Kit contains 20 connector pincers & 10 handle pins.)
Pincer: CYHP002
Pin: CYHP003

Web Resources

Sample requests, downloadable CAD drawings and other technical information: **www.littelfuse.com/lpsc**
www.littelfuse.com/lpsm

Recommended Fuses

Class CC 29
Midget-Style (10 x 38 mm) 32

© 2012 Littelfuse POWR-GARD® Products Catalog

Littelfuse
Expertise Applied | Answers Delivered

LPHV POWR-SAFE FUSE HOLDERS

1000 V

RoHS Pb

Description

The Littelfuse LPHV fuse holder is designed to house 1000 V SPF solar and FLU fuses. It is not designed for load break but is ideal for isolating photovoltaic module strings for maintenance and meets UL requirements for 1000 V solar fuse protection.

Dimensions Inches (mm)

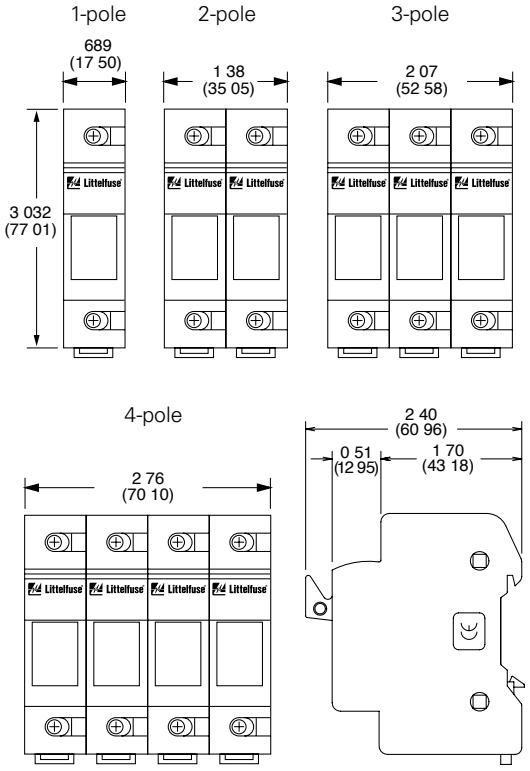

Features/Benefits

- Touch-safe design offers protection when replacing fuses
- Compact design
- 35 mm DIN Rail Mountable
- Available in 1-, 2-, 3- and 4-pole configurations
- No fuse pullers or tools required for fuse removal

Specifications

Voltage Ratings	1000 VDC
Amperage Rating	30 A
SCCR Rating	20 kA
Terminal Type	Pressure Plate
Wire Range	#8 - 14 CU 75 C
Terminal Torque	17.7 in-lbs
Power Dissipation	4 W Maximum
Fuse Type	SPF and FLU midget (10 X 38 mm)
Material	Thermoplastic
Flammability Rating	UL94 V-0
Approval	Self-certified with SPF and FLU fuses
Environmental	RoHS compliant, Lead (Pb) Free

Ordering Information

LPHV (1000 VDC)		
POLES	CATALOG NUMBER	ORDERING NUMBER
1	LPHV001	LPHV0001Z
2	LPHV002	LPHV0002Z
3	LPHV003	LPHV0003Z
4	LPHV004	LPHV0004Z

Multi-pole assembly kit Ordering No. CYHP001
(Kit contains 20 connector pincers & 10 handle pins.)
Pincer: CYHP002
Pin: CYHP003

Web Resources

Sample requests, downloadable CAD drawings and other technical information: **www.littelfuse.com/lphv**

More information about solar applications and fuse holder details: **www.littelfuse.com/solar**

Recommended Fuses

1000 VDC SPF Fuses 60
1000 VAC/VDC FLU Fuses 33

SOLAR-RATED

Look for this logo to indicate products that are used in solar applications. Visit our website **www.littelfuse.com/solar** for the latest updates on approvals, certifications, and new products.

BUS BAR SYSTEM

POWR-BAR Distribution

Description

A key objective for panel designers is safe distribution of power to multiple fuse holders in a compact design. The Littelfuse UL508 bus bar system eliminates most wire terminations in a timesaving package. A power distribution block and associated conductors are no longer needed to feed multiple POWR-SAFE fuse holders.

Features/Benefits

- Touch-safe design offers protection when replacing fuses
- Compact design
- 35 mm DIN Rail Mountable
- Available in one and three phase configurations
- No fuse pullers or tools required for fuse removal
- Can be cut down to optimal size

Recommended Fuse Holders

LPSM (600 V) 108
LPSC (600 V) 108
LPHV (1000 V) 109

Web Resources

Downloadable CAD drawings and other technical information: **www.littelfuse.com/busbar**

Specifications

Voltage Ratings 600 VAC/DC
1000 VDC*

Current Ratings

CROSS SECTION (mm²)	18 mm²	25 mm²
END FED	80 A	100 A
CENTER FED	160 A	200 A

SCCR 10 kA, 100 kA†
Conductor Copper
Pitch 17.8 mm
Approvals UL508 File E328654
Environmentals RoHS Compliant, Lead (Pb) free

*1 Phase 18 mm² rated 1000 VDC up to 160 A when center fed
1 Phase 25 mm² rated 1000 VDC up to 200 A when center fed
†When protected directly upstream by Class J 175 amperes max (18 mm² bus bar) and Class J 200 amperes max (25 mm² bus bar).

Ordering Information

1 PHASE, 18 mm²		LENGTH (mm)	1 PHASE, 25 mm²		LENGTH (mm)
ORDERING NUMBER	POLES		ORDERING NUMBER	POLES	
1PH3P18mm	3	50	1PH3P25mm	3	50
1PH6P18mm	6	104	1PH6P25mm	6	104
1PH9P18mm	9	155	1PH9P25mm	9	155
1PH12P18mm	12	208	1PH12P25mm	12	208
1PH15P18mm	15	270	1PH15P25mm	15	270
1PH57P18mm	57	1009	1PH57P25mm	57	1009

3 PHASE, 18 mm²		LENGTH (mm)	3 PHASE, 25 mm²		LENGTH (mm)
ORDERING NUMBER	POLES		ORDERING NUMBER	POLES	
3PH6P18mm	6	104	3PH6P25mm	6	104
3PH9P18mm	6	158	3PH9P25mm	9	158
3PH12P18mm	12	214	3PH12P25mm	12	214
3PH15P18mm	15	266	3PH15P25mm	15	266
3PH57P18mm	57	1009	3PH57P25mm	57	1009

End caps are standard with all 3 phase configurations except 57-pole meter length. End caps aren't needed for the 1 phase configurations from the factory or if the copper bus is trimmed per the supplied instructions. Power feed lugs and protective covers are extra.

Accessories

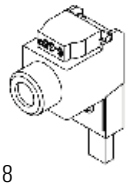

Power Feed Lug

Part Number BB18
Ampere Rating 115 A
Wire #10 – 1/0 AWG copper
Torque 50 lb-in

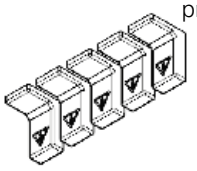

Pole Protective Covers

Part Number CTPT5
5 covers

Endcaps

Part Number: EDCP42 for Single Phase 50 piece bag
Part Number: EDCP7 for Three Phase 50 piece bag

© 2012 Littelfuse POWR-GARD® Products Catalog

Littelfuse
Expertise Applied | Answers Delivered

LPSM QUICK CONNECT POWR-SAFE FUSE HOLDERS

Specifications

Voltage Rating	600 VAC/DC
Amperage Rating	30 A
Approval	UL Recognized (File No. E14721), CSA Certified (File No. LR7316), CCC Approved
Terminal Type	1/4" Quick Connect Terminals
Fuse Type	Midget (10 X 38 mm) series
Material	Thermoplastic
Flammability Rating	UL94 V-0
SCCR Rating	Same as Fuse Rating

Ordering Information

POLES	CATALOG NUMBER	ORDERING NUMBER
1	LPSM001QCID	LPSM0001ZQCID
2	LPSM002QCID	LPSM0002ZQCID
3	LPSM003QCID	LPSM0003ZQCID
4	LPSM004QCID	LPSM0004ZQCID

Description

The LPSM midget fuse holder series is a dead front design providing protection to personnel when installing and removing fuses. The compact fuse holder mounts quickly onto 35 mm DIN rail, decreasing panel layout and assembly time. This product has two Quick Connect terminals on both the top and bottom of the holder, offering an additional connection option. It is available in 1-, 2-, 3- and 4-pole configurations.

Features/Benefits

- Dual ¼" Quick Connect Terminals on Top and Bottom of Holder
- Meets Dead Front requirements
- Mountable on 35 mm DIN Rail
- Local LED Indication

Recommended Fuses

Midget-Style 32

Web Resources

Sample requests, downloadable CAD drawings and other technical information: **www.littelfuse.com/lpsmqc**

Multi-pole Assembly Kit

Assembly kit is designed for use with LPSC/LPSM fuse holders. Kit contains 20 connector pincers and 10 handle pins.

Part No: CYHP001

Dimensions mm (inches)

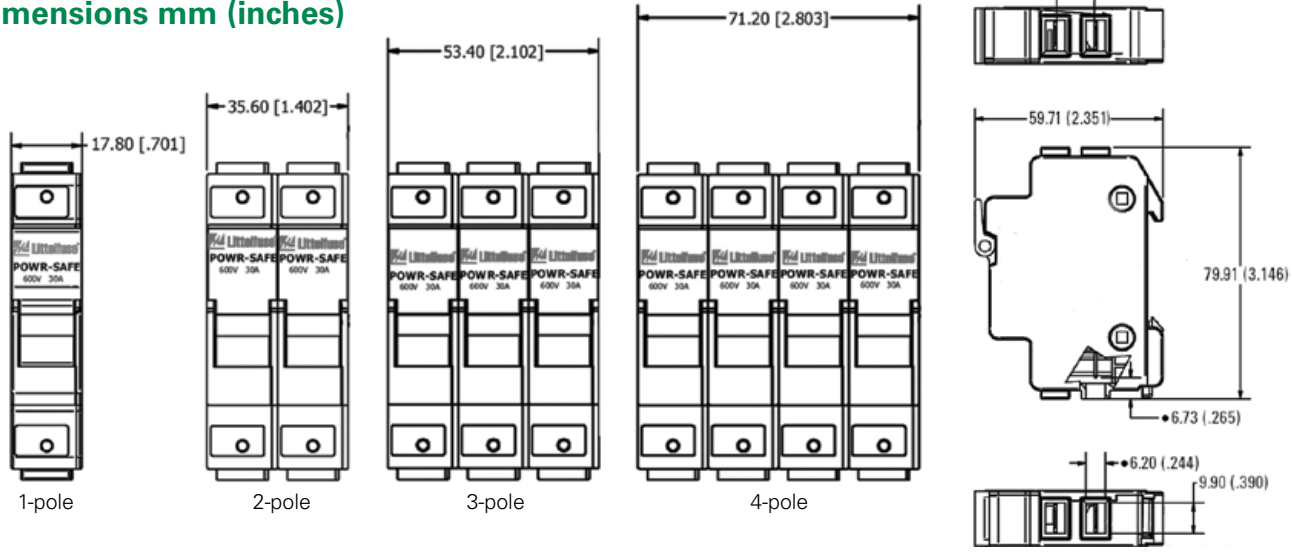

1-pole 2-pole 3-pole 4-pole

LFPHV TOUCH-SAFE FUSE HOLDERS

1000 V

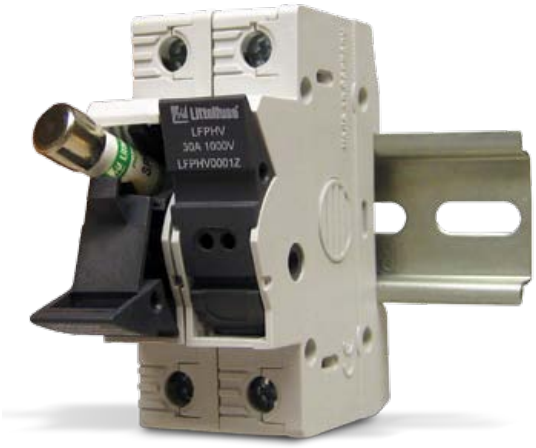

Description

The Littelfuse LFPHV fuse holder is designed to house 1000 V SPF solar and FLU 10 x 38 mm fuses. It is not designed for load break but is ideal for isolating photovoltaic module strings for maintenance and meets UL requirements for 1000 V solar fuse protection.

Features/Benefits

- Touch-safe design offers protection when replacing fuses
- Compact design
- 35 mm DIN Rail Mountable
- Available in 1-, 2-, 3- and 4-pole configurations
- No fuse pullers or tools required for fuse removal
- Indication option available

Specifications

Voltage Ratings	1000 VDC
Amperage Rating	30 A
SCCR Rating	33 kA
Terminal Type	Pressure Plate
Power Dissipation	3 W Maximum
Fuse Type	SPF and FLU midget (10 X 38 mm)
Material	Thermoplastic
Approval	UL Listed (File No. E345481) IEC 60269-1* IEC 60269-4* IEC 60269-2* IEC 60269-6* *with VDE verification
Environmental	RoHS compliant, Lead (Pb) free

Dimensions Inches (mm)

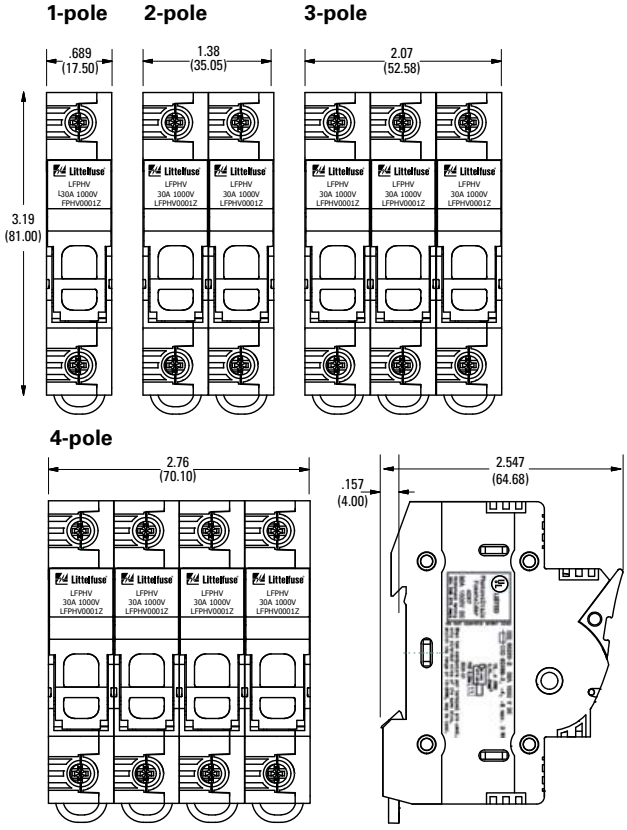

TERMINAL TORQUE			
NUMBER OF WIRES	WIRE TYPE	WIRE SIZE	TORQUE
1	90° Cu Only	18 AWG-8 AWG	18-22 lb-in/ 2.03-2.49 N-m
1	90° Cu Only	4 AWG-6 AWG	22-26 lb-in/ 2.49-2.94 N-m
2†	90° Cu Only	18 AWG-8 AWG	18-22 lb-in/ 2.03-2.49 N-m

†Must be the same cross-sectioned size

Ordering Information

CATALOG NUMBER	ORDERING NUMBER	POLES	PACK QTY	INDICATION
LFPHV001	LFPHV0001Z	1	12	–
LFPHV002	LFPHV0002Z	2	6	–
LFPHV003	LFPHV0003Z	3	4	–
LFPHV004	LFPHV0004Z	4	3	–
LFPHV001ID	LFPHV0001ZXID	1	12	•
LFPHV002ID	LFPHV0002ZXID	2	6	•
LFPHV003ID	LFPHV0003ZXID	3	4	•
LFPHV004ID	LFPHV0004ZXID	4	3	•

Web Resources

Sample requests, downloadable CAD drawings and other technical information: **www.littelfuse.com/lfphv**

More information about solar applications and fuse holder details: **www.littelfuse.com/solar**

Recommended Fuses

1000 VDC SPF Fuses 60
1000 VAC/VDC FLU Fuses 33

Look for this logo to indicate products that are used in solar applications. Visit our website **www.littelfuse.com/solar** for the latest updates on approvals, certifications, and new products.

© 2012 Littelfuse POWR-GARD® Products Catalog

Littelfuse®
Expertise Applied | Answers Delivered

LFPSJ DEAD FRONT CLASS J POWR-SAFE FUSE HOLDERS

600 V

INDICATOR

Description

Littelfuse Class J POWR-SAFE Dead Front holders provide optimum protection to personnel and are UL Listed.

Features

- Indicating and non-indicating options available
- Dual LED indication distinguishes polarity in DC power applications
- Small compact design offers ultimate flexibility
- 35mm DIN Rail Mountable
- 1-, 2-, and 3-pole configurations
- Easy installation and fuse removal with no additional pullers or tools required

Dimensions Inches (mm)

30 Amp

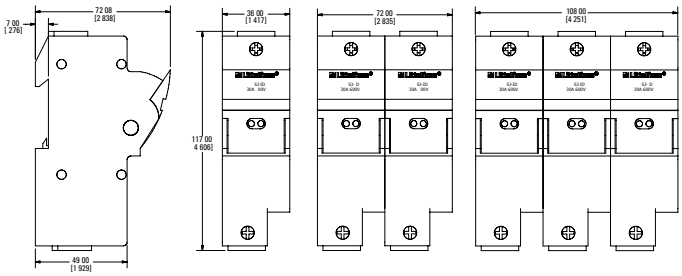

60 Amp

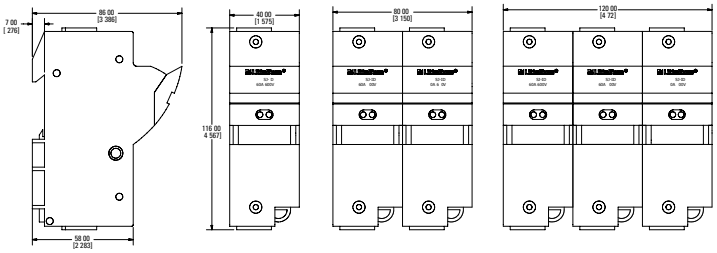

Note: These dimensions are for reference only. Please contact factory for additional information.

Specifications

Voltage Ratings	600 VAC/VDC
Interrupting Rating	200 kA
Ampere Rating	30 and 60 A
LEDs	110 V – 600 V
Terminal Type	Pressure Plate
Material	Thermoplastic
Flammability Rating	UL94 V-0
Terminal Screws	Phillips / Slotted
Approvals	UL Listed (File No. E14721)

Ordering Information

AMPERE RATING	POLES	INDICATION	ORDERING NUMBER	PACK QTY.	WIRE RANGE	TORQUE
30 A	1	–	LFPSJ301.Z	6	0.75mm² – 1mm² 1.5mm² – 50mm² 18 – 1 AWG	2.5 N-m 4.0 N-m 35 lb-in
	2	–	LFPSJ302.Z	3		
	3	–	LFPSJ303.Z	2		
30 A	1	•	LFPSJ301.ZXID	6		
	2	•	LFPSJ302.ZXID	3		
	3	•	LFPSJ303.ZXID	2		
60 A	1	–	LFPSJ601.Z	6	2.5mm² – 50mm² 14 – 1 AWG	4.0 N-m 35 lb-in
	2	–	LFPSJ602.Z	3		
	3	–	LFPSJ603.Z	2		
60 A	1	•	LFPSJ601.ZXID	6		
	2	•	LFPSJ602.ZXID	3		
	3	•	LFPSJ603.ZXID	2		

Multi-Pole Assembly Kit

US3J2PAK to assemble two LFPSJ301.Z
US3J3PAK to assemble three LFPSJ301.Z
US6J2PAK to assemble two LFPSJ601.Z
US6J3PAK to assemble three LFPSJ601.Z

Web Resources

Sample requests, downloadable CAD drawings and other technical information: **www.littelfuse.com/lfpsj**

Recommended Fuses

Class J 23

FUSE PULLERS & POWR-JAW CLIP CLAMPS

MFP • LPFP • GFP • 097023

Features/Benefits

- Ergonomically designed fuse pullers designed to safely remove power fuses
- Molded design offers more comfortable and natural grip than traditional pullers, increasing performance

Specifications

TYPE OF FUSE PULLER	PART NUMBER	FUSE SIZE (DIAMETER)
Midget Fuse	MFP	3/16" - 1/2" fuses
Pocket Fuse	LPFP	250 V fuses from 0-200 A 600 V fuses from 0-100 A 9/16" - 1 19/32" fuses
Giant Fuse	GFP	250 V fuses from 61-600 A 600 V fuses from 61-400 A 1 1/16" - 2 19/32" fuses
Tri-puller	097023	For ATO and glass fuses

Web Resources

Sample requests and other technical information:
www.littelfuse.com/fusepullers

LCC Series POWR-JAW

Features/Benefits

- Improve contact between fuse and clip
- Help prevent unnecessary heat from poor contact due to the loss of spring force. This reduces:
  1. Nuisance fuse opening
  2. Premature aging of surrounding components
- High temperature phenolic resin knob for severe environments
- Wide range of coverage with simple design

Ordering Information

CATALOG NUMBER	ORDERING NUMBER	VOLTS	AMPERES
LCC1	0LCC1	250	0-30
LCC2	0LCC2	250	35-60
LCC2	0LCC2	600	0-30
LCC4	0LCC4	600	35-60
LCC5	0LCC5	250 or 600	70-100
LCC6	0LCC6	250 or 600	110-200
LCC7	0LCC7	250 or 600	225-400
LCC8	0LCC8	250 or 600	450-600

Note: POWR-JAW Clip Clamps are sold individually, not in pairs.
A minimum of 1/8" of clearance between the fuse block barrier and fuse clip is required to install Clip Clamps.

Web Resources

Sample requests and other technical information:
www.littelfuse.com/clipclamps

© 2012 Littelfuse POWR-GARD® Products Catalog

Littelfuse®
Expertise Applied | Answers Delivered

3AG OMNI BLOCK®

354 OMNI-BLOK (Molded Base Type Fuse Block)

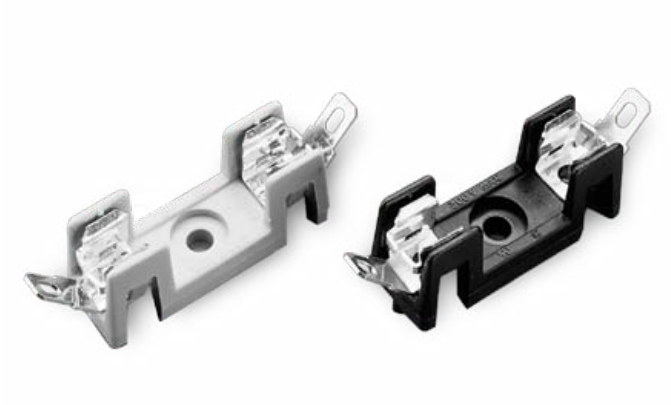

Description

A low profile fuse block featuring individual barriers that reinforce the fuse clips while providing greater protection against clip damage and electrical shock. The unique design permits self-alignment of clips to fuse cap. This, plus a one-piece clip/terminal, assures low contact resistance.

Specifications

Dielectric Strength	1500 V Minimum
Clip/Terminals	Tin-Plated Spring Brass; two different style clips can be supplied for circuit identity or polarization
Base	Glass reinforced Thermoplastic: Gray except anit-rotation series which is black
Flammability Rating	UL94 V-0
Ambient Temperature	–40˚C to +85˚C

Dimensions Inches

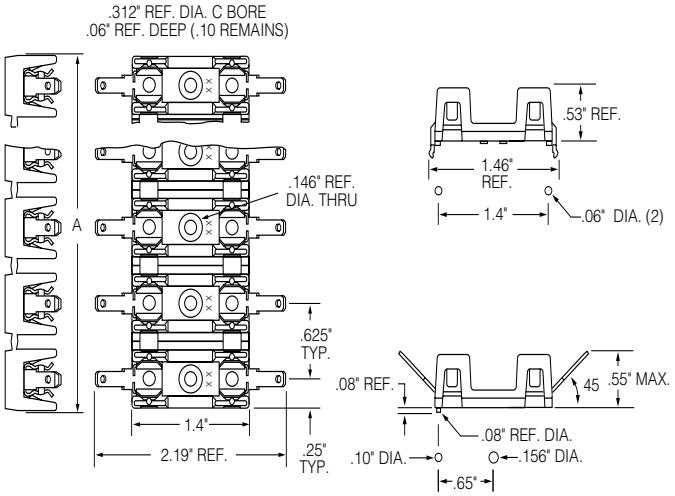

Ordering Information

CATALOG NUMBER	TERMINALS	VOLTAGE	CURRENT RATING	
			UL	CSA
354 000	Solder	300 V*	30 A	30 A
354 600	3/16" Q.C.	300 V	20 A	20 A
354 800	1/4" Q.C.	300 V	20 A	20 A
354 900	1/4" Q.C.	300 V	30 A	25 A
354 101-GY	P.C. Board	300 V	15 A	15 A

*30 A capability is based on temperature rise with #10 AWG wire properly soldered.

Recommended Fuses

3AG Cartridge 36

Web Resources

For additional technical information visit:
www.littelfuse.com

Technical Information

SOLDER TYPE TERMINALS	3/16" Q.C. TERMINALS†	1/4" Q.C. TERMINALS	1/4" Q.C. TERMINALS†	POLES	DIM "A"
354 001GY	354 601GY	354 801GY	354 901GY	1	.50"
354 002GY	354 602GY	354 802GY	354 902GY	2	1.12"
354 003GY	354 603GY	354 803GY	354 903GY	3	1.75"
354 004 GY	354 604GY	354 804GY	354 904GY	4	2.38"
354 005GY	354 605GY	354 805GY	354 905GY	5	3.00"
354 006GY	354 606GY	354 806GY	354 906GY	6	3.63"
354 007GY	354 607GY	354 807GY	354 907GY	7	4.25"
354 008GY	354 608GY	354 808GY	354 908GY	8	4.88"
354 009GY	354 609GY	354 809GY	354 909GY	9	5.50"
354 010GY	354 610GY	354 810GY	354 910GY	10	6.13"
354 011GY	354 611GY	354 811GY	354 911GY	11	6.75"
354 012GY	354 612GY	354 812GY	354 912GY	12	7.38"
354 021BL*	354 621BL*	354 821BL*	354 921BL*	1	.50"
354 101GY	—	—	—	1	.50"

† NEMA style
* With Anti-Rotation Boss"

LFFB SERIES LIMITER BLOCK/LHFB INLINE HOLDER

LFFB

Dimensions mm (inches)

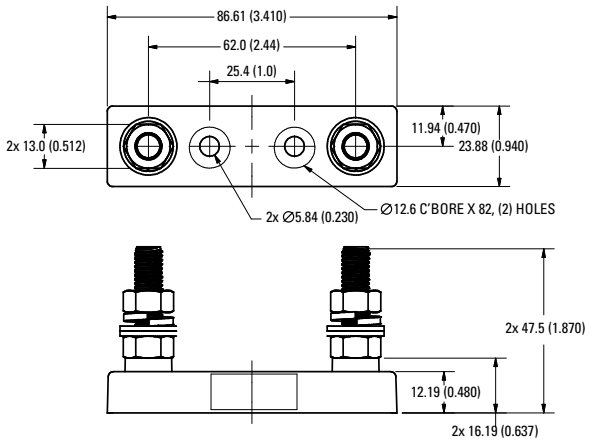

Description

The LFFB003 fuse block is designed to accept CNN and CNL style limiter fuses. Applications include but are not limited to forklifts, golf carts and other low-voltage battery equipment. It is specifically designed for the HAZGARD™ fuse but can be used for CNN/CNL fuses as well.

Specifications

Voltage Rating	150 VAC/VDC
Ampere Rating	800 A
Approvals	UL Recognized (File No. E14721)
Construction	Base—Thermoset Studs—Steel Zinc Plated

Ordering Information

CATALOG NUMBER	ORDERING NUMBER
LFFB003	LFFB0003Z

Web Resources

Sample requests, downloadable CAD drawings and other technical information: **www.littelfuse.com/lffb**

Recommended Fuses

CNL/CNN Cable limiter fuses 62
HAZGARD fuse.....62

LHFB

Description

The Littelfuse LHFB waterproof in-line fuse holder is ideal for harsh environments. The LHFB holder features the voltage and ampere rating molded into the body, along with a wire strip gauge. It also withstands solvents and vibration.

Features/Benefits

- Waterproof in-line fuse holder for harsh environments
- One-piece molded thermoplastic body
- Bright green color offers high visibility
- Voltage and ampere rating molded into body

Specifications

Voltage Rating	32 V
Ampere Rating	30 A
Fuses	1/4" to 1 1/4" fuses
Wire Size	Accepts #16 to #18 gauge wire
Operating Temperature	-20° C to 80° C

Installation Instructions

1. Thread wire through fuse holder body
2. Strip wire insulation per strip gauge
3. Crimp wire to fuse clip*
4. Pull wire through and seat fuse clip in the holder body
5. Insert desired fuse type and rating
6. Snap holder body together

*Recommended crimping tools: Thomas & Betts No. WT-111M
Note: Wire is not supplied with the holder.

Web Resources

Sample requests, downloadable CAD drawings and other technical information: **www.littelfuse.com/lhfb**

© 2012 Littelfuse POWR-GARD® Products Catalog

Littelfuse®
Expertise Applied | Answers Delivered

571 & 572 SERIES PANEL-MOUNT FUSE HOLDERS

571

Description

Panel mount fuse holders are for Midget-Style and Class CC fuses. Class CC fuses have a rejection feature on one end cap, which mates with the rejection feature of Littelfuse Class CC fuses holders to prevent the installation of fuses with lower voltage ratings or interrupting ratings. Watertight version must be front panel mounted.

Dimensions Inches (mm)

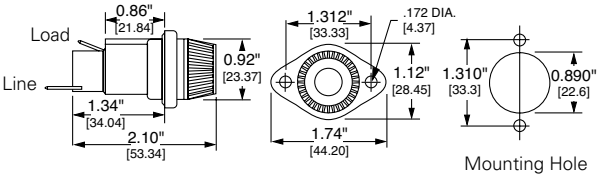

Ordering Information

CATALOG/ORDERING NUMBER				BOTTOM TERMINAL	FUSE LENGTH RANGE*	FOR USE WITH
STANDARD		WATERTIGHT				
571027	05710027L	571027P	05710027LXP	Straight	1 5/16" – 1 3/8"	Midget Fuses
571028	05710028L	571028P	05710028LXP	Rt. Angle		
571007	05710007L	571007P	05710007LXP	Straight	1 13/32" – 1 1/2"	Midget Fuses
571008	05710008L	571008P	05710008LXP	Rt. Angle		
5710CC	057100CCL	5710CCP	057100CCLXP	Straight	1 1/2"	Class CC Fuses
571RCC	05710RCCL	571RCCP	05710RCCLXP	Rt. Angle		

*Fuse diameter is 13/32"
Note: Contact factory for versions with pre-assembled wire leads.

Specifications

Voltage Rating	600 V
Ampere Rating	30 A for Class CC and Midget fuses
Dielectric Strength	4000 V Minimum
Terminals	Tin-plated brass combination solder and quick-connect
O-Rings	901-184 (body), 901-260 (knob)
Molded Parts	Black thermoplastic
Approvals	UL Recognized (File No. E14721) UL Recognized for branch circuit protection (571OCC/RCC) CSA Certified (File No. LR7316)

Web Resources

Sample requests, downloadable CAD drawings and other technical information: **www.littelfuse.com/571**

572

Description

The 572 series panel mount fuse holders are designed to minimize installation time. Its unique design incorporates a snap-mount feature that allows the holder to be installed without any tools or mounting hardware.

Dimensions Inches (mm)

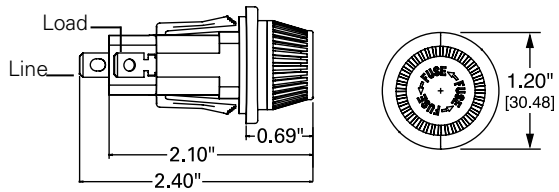

Ordering Information

CATALOG/ORDERING NUMBER				BOTTOM TERMINAL	FUSE LENGTH RANGE†	FOR USE WITH
STANDARD		WATERTIGHT				
572027	05720027L	572027P	05720027LXP	Straight	1 5/16" – 1 3/8"	Midget Fuses
572028	05720028L	572028P	05720028LXP	Rt. Angle		
572007	05720007L	572007P	05720007LXP	Straight	1 13/32" – 1 1/2"	Midget Fuses
572008	05720008L	572008P	05720008LXP	Rt. Angle		
5720CC	057200CCL	5720CCP	057200CCLXP	Straight	1 1/2"	Class CC Fuses
572RCC	05720RCCL	572RCCP	05720RCCLXP	Rt. Angle		

†Fuse diameter is 13/32"
Note: Contact factory for versions with pre-assembled wire leads.

Specifications

Voltage Rating	600 V
Ampere Rating	30 A for Class CC and Midget fuses
Dielectric Strength	4000 V Minimum
Terminals	Tin-plated brass combination solder & quick-connect
Molded Parts	Black thermoplastic
Approvals	UL Recognized (File No. E14721) UL Recognized for branch circuit protection (5720CC/RCC) Class CC version CSA Certified (File No. LR7316)
Mounting	Double "D" punch Designed to fit 14-18 gauge

Web Resources

Sample requests, downloadable CAD drawings and other technical information: **www.littelfuse.com/572**

PANEL MOUNT 3AG (¼" X 1¼") FUSE HOLDERS

342 Series (Traditional Panel Mount Type)

Straight Terminal
Knurled Knob

Right Angle
Terminal
Fluted Knob

Specifications

Electrical	Rated at 20 A for any voltage up to 250 V
Dielectric Strength	2400 V minimum
Mounting	Withstands 15 lb-in mounting torque; maximum panel thickness .187"
Molded Parts	Black thermoplastic (UL94 V-0)
Knob	Bayonet style with lettering
Terminals	Copper & copper alloy. Tin plated, except ¼" Quick-Connect terminals are nickel plated
Ambient Temperature	–40˚C to +85˚C

Recommended Fuses

3AG Cartridge 36

Web Resources

Additional technical information available at:
www.littelfuse.com/342

Description

Panel Mount Fuse holders for 3AG (¼" x 1¼") fuses. Both fluted and knurled knob terminal options are available.

Ordering Information

Straight Terminal

FLUTED KNOB		KNURLED KNOB		TERMINAL
CATALOG/ORDERING NUMBER		CATALOG/ORDERING NUMBER		
342014A	03420014X	342012A	03420012X	Solder
342038A	03420038X	342058A	03420058X	3/16" Q.C.
342838A	03420838X	342858A	03420858X	¼" Q.C.

Right Angle Terminal

FLUTED KNOB		KNURLED KNOB		TERMINAL
CATALOG/ORDERING NUMBER		CATALOG/ORDERING NUMBER		
342004	03420004X	342022A	03420022X	Solder
342028A	03420028X	342048A	03420048X	3/16" Q.C.
342828	03420828X	342848	03420848X	¼" Q.C.

Straight Terminal

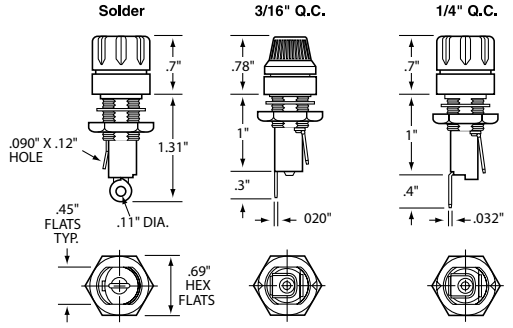

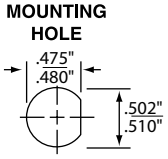

Right Angle Terminal

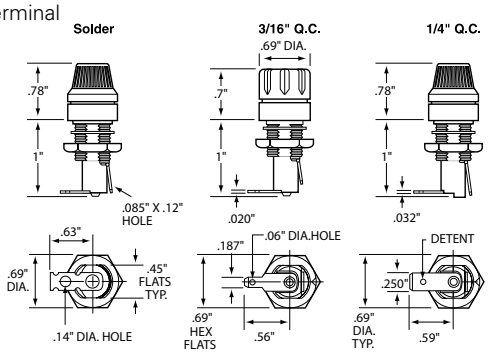

Dimensions in inches

342 Series (Watertight Panel Mount Type)

Web Resources

Additional technical information available at:
www.littelfuse.com/342

Specifications

Electrical	Rated at 20 A for any voltage up to 250 V
Dielectric Strength	1500 V minimum
Mounting	Withstands 15 lb-in mounting torque; maximum panel thickness is .250"
Molded Parts	Black thermoset (UL94 V-0)
Knob	Screw type
Seal	O-ring provides a watertight seal on the front side of the panel per MIL-PRF-19207
Terminals	Copper & copper alloy. Tin plated. Solder type
Ambient Temperature	–40˚C to +85˚C
Hardware	O-rings (2) and hex nut, unassembled

Dimensions Inches

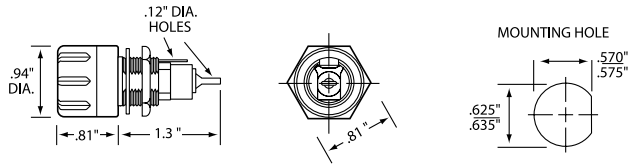

Ordering Information

CATALOG NUMBER	ORDERING NUMBER
342006A	0342006ZXA

Recommended Fuses

3AG Cartridge 36

© 2012 Littelfuse POWR-GARD® Products Catalog

Littelfuse®
Expertise Applied | Answers Delivered

INTERNATIONAL SHOCK SAFE PANEL MOUNT

345 Series (International Shock-Safe Panel Mount Type)

Description

Designed to eliminate electrical shock as defined by IEC standards 60065 and 60127, these panel-mount fuses holders offer a wide variety of options. This allows for inventory reduction and versatility.

Features/Benefits

- Anti-tease feature eliminates circuit interruption when knob is accidentally depressed
- Five fuse holder types for maximum flexibility
- Two knob styles—screwdriver slot and fingergrip
- Drip proof option available on screwdriver slot knob style
- Two terminal choices depending on application

Web Resources

Downloadable CAD drawings and other technical information
www.littelfuse.com/shocksafe

Recommended Fuses

2AG.....36
3AG.....36
5 x 20 mm.....35

Specifications

Insulation Resistance	10,000 megaohm minimum at 500 VDC
Contact Resistance	Less than .005 ohm average at currents up to 1 A
Mounting	Threaded styles withstand 15 in-lb mounting torque Profile panel thickness .032" min/310" max. Quick mount panel thickness .012" min/360" max. Rear mount panel thickness.012" min/260" max.
Body Material	Black glass-filled thermoplastic (UL94 V-0)
Knob Material	Grey, blue or black glass-filled thermoplastic (UL94 V-0)
Hex Nut Material	Black glass-filled thermoplastic
Knob	Finger-Grip, Fuse Extractor type or Screwdriver Slot, Fuse Extractor type with plated copper alloy insert Plated copper alloy contact clips. Spring loaded, locking mechanism provides an anti-tease feature and will not vibrate loose
Terminals	Copper alloy, Tin-plated
Ambient Temperature	–40˚C to +85˚C
Hardware	Threaded style fuse holders are supplied with a thermoplastic hex nut unassembled Quick mount style fuse holders are supplied with a push-on type retaining nut, black oxide finish, unassembled A synthetic rubber O-ring will be supplied only with the screwdriver slot knob when the drip-proof version is requested

AGENCY APPROVAL	FILE NUMBER	3AG	5 X 20 mm	2AG
UL	E75961	20 A 250 V	10 A 250 V	10 A 250 V
CSA	LR91788	20 A 250 V	10 A 250 V	10 A 250 V
VDE	116895E	10 A 250 V	10 A 250 V	—

Note: To order with a metal internal tooth lockwasher (L) and/or neoprene panel washer (N) and/or drip-proof synthetic rubber "O" ring with Neoprene washer (NP) [Screwdriver slot knob only], add the appropriate suffix (L, N, or NP) respectively.

Please refer to Technical Application Guide section for information on proper fuse holder de-rating.

Ordering Information

EXAMPLE:
(Complete Assembly with Options)

Series Number **345 3 LS 7 LNP**

FUSE SIZE	STYLE	TERMINALS	OPTIONS*
2 2AG .177" x .570"	LF Low Profile Body Black Fingergrip Knob	1 3/16" (Right Angle) Dual Purpose Solder/QC	L Lockwasher
3 3AG .250" x 1.250"	RF Rear Mount Body Black Fingergrip Knob	2 3/16" (Straight) Dual Purpose Solder/QC	N Neoprene Washer
5 5 x 20 mm .197" X .787"	HF High Profile Body Screwdriver Slot Knob	3 3/16" (Right Angle) NEMA QC	NP Drip-Proof O-Ring† with Neoprene Washer
	LS Low Profile Body Screwdriver Slot Knob	4 3/16" (Straight) NEMA QC	
	QS Quick Mount Body Screwdriver Slot Knob	7 1/4" (Right Angle) NEMA/DIN QC	
	Screwdriver Slot Knob 2AG–Blue Knob 3AG–Grey Knob 5 x 20 mm–Black Knob	8 1/4" (Straight) NEMA/DIN QC	

*Options (L, N, NP) can be ordered individually or in combination.
†Screwdriver slot knob only.

SEMICONDUCTOR FUSE BLOCKS

LSCR Series

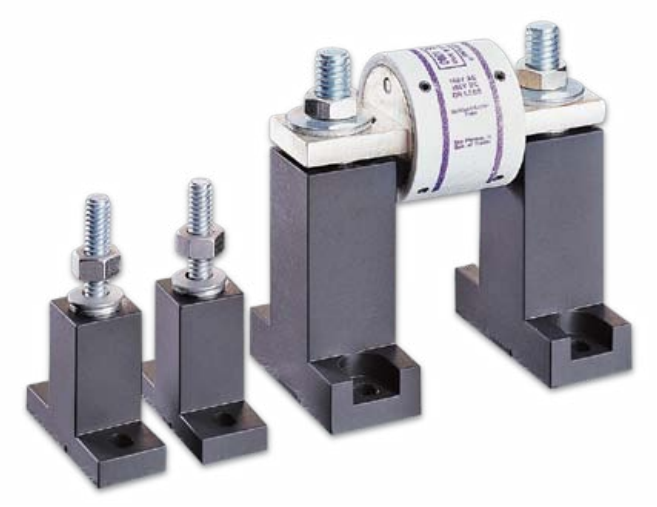

Description

Modular-designed Semiconductor fuse blocks are designed to accommodate a wide range of Semiconductor fuses, with a maximum diameter of 3".

Features/Benefits

- Modular design reduces inventory requirements
- Sold in pairs for convenience
- Constructed of molded phenolic (with plated steel studs)

Dimensions Inches

LSCR001

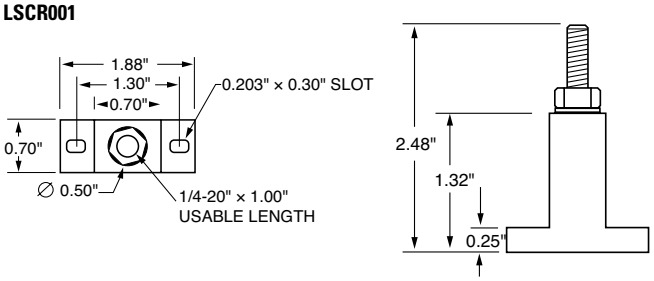

LSCR002

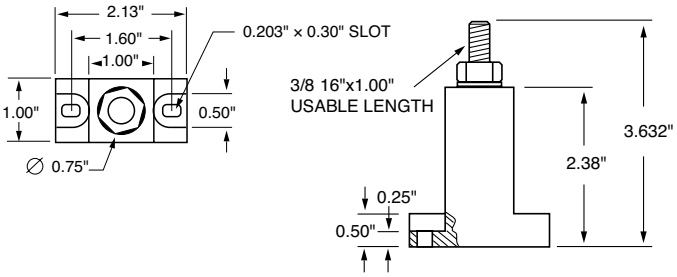

Specifications

Voltage Rating	LSCR001: Accepts fuses 1" diameter or less at 600 V LSCR002: Accepts fuses up to 3" diameter at 600 V
Ampere Ratings	LSCR001: 1 – 400 A capacity LSCR002: 70 – 800 A capacity
Approvals	UL Recognized (File No. E14721) CSA Certified (File No. 73160)
Stud Size	LSCR001: ¼ -20 thread (Torque 61 in-lbs.) LSCR002: ⅜ -16 thread (Torque 192 in-lbs)
Base	Molded phenolic. 150˚ C temperature rating
Terminal Construction	Plated steel. Supplied with nut and belleville washer

Recommended Fuses

Semiconductor and Class T fuses. See tables below.

LSCR001 Semiconductor Fuse Block Selection Guide

FUSE SERIES	AMPERE RATING	PAGE
L15S	70-400	66
L17T	70-250	52
L25S	35-60	66
LA30QS	35-60	69
L50S	35-100	66
LA50QS	35-100	70
L60S	35-60	66
KLC	35-60	66
JLLN	70-100	26
JLLS	70-100	26

LSCR002 Semiconductor Fuse Block Selection Guide

FUSE SERIES	AMPERE RATING	PAGE
L15S	500-800	66
L17T	300-800	52
L25S	225-800	66
LA30QS	225-800	69
L50S	225-800	66
LA50QS	225-800	70
L60S	200-800	66
KLC	125-800	66
JLLN	225-800	26
JLLS	225-800	26

Web Resources

Sample requests, downloadable CAD drawings and other technical information: **www.littelfuse.com/lscr**

© 2012 Littelfuse POWR-GARD® Products Catalog

Littelfuse®
Expertise Applied | Answers Delivered

SEMICONDUCTOR FUSE BLOCKS

1LFS and 1LS Series

Specifications

Voltage Rating	600 V
Ampere Range	1 – 600 A
Approvals	UL Recognized
Insulator Base	150˚ C general purpose phenolic
Box Lug Terminal	Tin plated aluminum

Dimensions Inches (mm)

Dimensions for reference only.

1LFS101

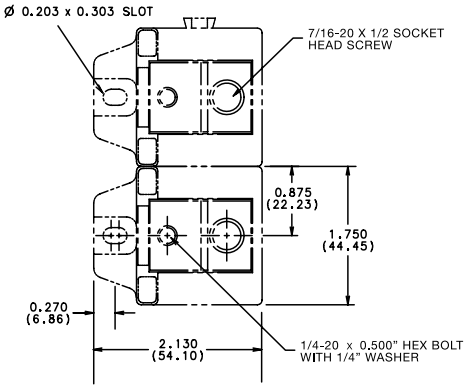

1LFS102

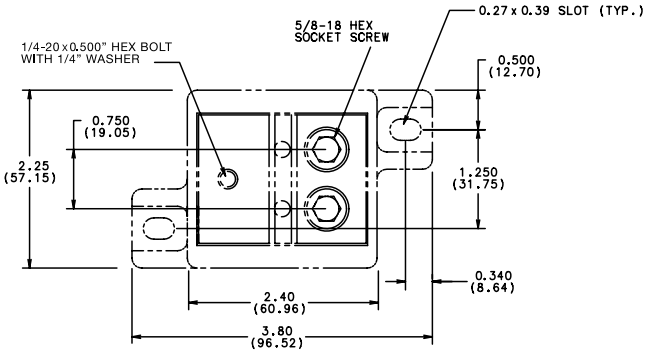

1LS110

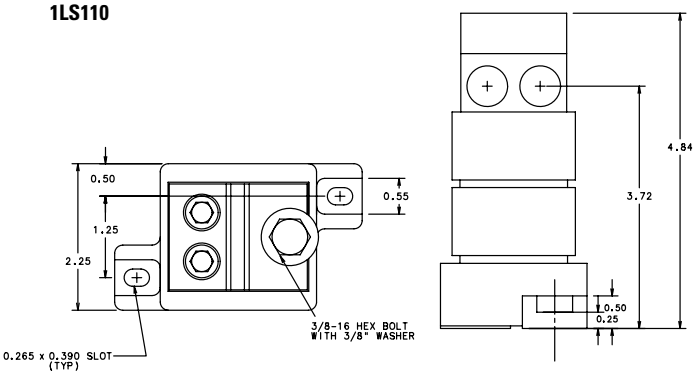

Description

Littelfuse modular style semiconductor fuse blocks accommodate a wide range of semiconductor fuses. Blocks are provided in pairs with fuse mounting hardware.

Features/Benefits

- Modular design reduces inventory requirements
- Sold in pairs for convenience
- Constructed of molded phenolic (with plated steel studs)

Ordering Information

CATALOG/ ORDERING NUMBER	AMPERE RATING	WIRE RANGE	WIRE RATING	APPROVALS
1LFS101	100 A	#2/0 - 14 CU/AL	120 in-lbs	UL Recognized
1LFS102	400 A	250MCM - #6 CU/AL	275 in-lbs	UL Recognized
1LS110	400 A	250MCM - #6 CU/AL	275 in-lbs	Self-Certified

Web Resources

Sample requests, downloadable CAD drawings and other technical information: **www.littelfuse.com/1lfs**

Recommended Fuses

Wide range of semiconductor fuses 66

POWR-BLOKS™

Distribution Blocks • Splicer Blocks • Covers

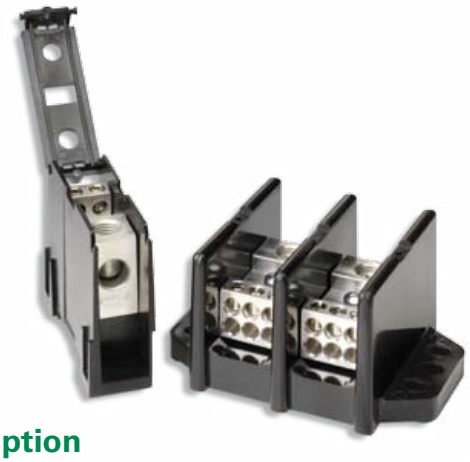

Description

POWR-BLOKS™ power distribution blocks offer a safe, convenient way of splicing cables, providing a fixed junction tap-off point or splitting primary power into secondary circuits. Lx2xxx-DIN series offers integral DIN-Rail mount and an optional hinged safety cover.

Optional power distribution block covers provide protection against accidental shorting between poles caused by loose wires, tools, or other conductive material. They also protect personnel from accidentally contacting energized connectors. To order protective covers, match the number of poles for the block to the cover.

Applications

Typical applications include heating, air conditioning and refrigeration systems, elevator systems, material handling equipment, control panels, motor controls, switchgear, and anywhere power needs to be distributed to more than one load.

Connectors

Box lug connectors are designed for use with a single, solid or class B or C stranded conductor. Use of more than one conductor per connector opening or use of extra-flexible, fine-stranded conductors, such as welding cable, voids the UL Listing and may cause overheating. Manufacturers of cable terminations can furnish crimp-on sleeves for fine stranded conductors which permit these conductors to be used with box lugs.

Ampere Ratings

The ampere rating per pole for power distribution blocks is based on the line ampacity of 75°C insulated conductors per NEC® Table 310.16. If 60°C insulated conductors are used, load must not exceed the ampacity of 60°C conductors. Use of conductors rated in excess of 75°C is permitted (for example 90°C), however, load must not exceed the ampacity of 75°C conductors.

Specifications

Voltage Rating	600 V
Current Rating	Based on NEC Table 310.16, using 75°C copper wire
Material	Phenolic rated at 150°C and Thermoplastic rated at 125°C (LD1400 and LS1300 series only)
Connector	Standard: Highly conductive aluminum, tin plated Copper: Highly conductive copper, tin plated
Flammability Rating	UL94 V-0
Approvals	UL Recognized - LD/LS Series (File: E171395) UL Recognized - LFD/LFS Series (File: E309688) CSA Certified (File: LR700111)
Environmental	RoHS compliant, Lead (Pb) free

Ordering Information

See Selection Guide on next page

Web Resources

For dimension, CAD and 3-D drawings, visit:
www.littelfuse.com/powrbloks

Hinged Plastic Covers

CATALOG/ ORDERING NUMBER	FOR USE WITH DISTRIBUTION/SPLICER BLOCK NO.	POLES
0LCH1321Z	LD2xxx-1DIN / LS2xxx-1DIN	1
0LCH1322Z	LD2xxx-2DIN / LS2xxx-2DIN	2
0LCH1323Z	LD2xxx-3DIN / LS2xxx-3DIN	3

Note: Optional hinged covers snap on to blocks.

Clear Plastic Covers

CATALOG/ ORDERING NUMBER	FOR USE WITH DISTRIBUTION/SPLICER BLOCK NO.	POLES
LPBC02	LD0xxx-2 / LS0xxx-2	2
LPBC03	LD0xxx-3 / LS0xxx-3	3
LPBC21	LD2xxx-1 / LS2xxx-1	1
LPBC22	LD2xxx-2 / LS2xxx-2	2
LPBC23	LD2xxx-3 / LS2xxx-3	3
LPBC31	LD3xxx-1 / LS3xxx-1	1
LPBC32	LD3xxx-2 / LS3xxx-2	2
LPBC33	LD3xxx-3 / LS3xxx-3	3
LPBC41	LD4xxx-1 / LS4xxx-1	1
LPBC42	LD4xxx-2 / LS4xxx-2	2
LPBC43	LD4xxx-3 / LS4xxx-3	3
LPBC51	LD5xxx-1 / LS5xxx-1	1
LPBC52	LD5xxx-2 / LS5xxx-2	2
LPBC53	LD5xxx-3 / LS5xxx-3	3

Note: For installation of optional clear plastic covers, use the screws provided with each cover.

© 2012 Littelfuse POWR-GARD® Products Catalog

Littelfuse®
Expertise Applied | Answers Delivered

POWR-BLOKS™

Distribution Block Selection Guide

AMP RATING PER POLE	POLES	CONNECTOR MATERIAL	LINE CONNECTION				LOAD CONNECTION				DRAWING	CATALOG/ ORDERING NUMBER
			CONNECTOR	OPENINGS PER POLE	LUG TYPE	WIRE RANGE	CONNECTOR	OPENINGS PER POLE	LUG TYPE	WIRE RANGE		
115	1	AL		1	Slotted	#2 - #14		4	Slotted	#10 - #18	2	0LD14001Z
115	2			1	Slotted	#2 - #14		4	Slotted	#10 - #18	2	0LD14002Z
115	3			1	5/32" Hex	#2 - #14		4	5/64" Hex	#10 - #18	2	LFD14003Z
115	4			1	Slotted	#2 - #14		4	Slotted	#10 - #18	2	0LD14004Z
175	2	AL		1	5/16" Hex	2/0 - #14		6	Slotted	#4 - #14	1	0LD04012Z
175	3			1	3/16" Hex	2/0 - #14		6	1/8" Hex	#4 - #14	1	LFD04013Z
175	2	AL		1	5/16" Hex	2/0 - #14		4	Slotted	#4 - #14	1	0LD04022Z
175	3			1	5/16" Hex	2/0 - #14		4	Slotted	#4 - #14	1	0LD04023Z
310	2	AL		1	5/16" Hex	350mcm - #6		6	Slotted	#4 - #14	1	0LD04042Z
310	3			1	5/16" Hex	350mcm - #6		6	Slotted	#4 - #14	1	0LD04043Z
175	1	AL		1	5/16" Hex	2/0 - #14		4	1/8" Hex	#4 - #14	3	0LD25701Z
175	2			1	3/16" Hex	2/0 - #14		4	1/8" Hex	#4 - #14	3	LFD25702Z
175	3			1	3/16" Hex	2/0 - #14		4	1/8" Hex	#4 - #14	3	LFD25703Z
175	1	CU		1	3/16" Hex	2/0 - #14		4	Slotted	#4 - #14	3	0LD29701Z
175	2			1	3/16" Hex	2/0 - #14		4	Slotted	#4 - #14	3	0LD29702Z
175	3			1	3/16" Hex	2/0 - #14		4	Slotted	#4 - #14	3	0LD29703Z
335	1	AL		1	5/16" Hex	400mcm - #6		4	Slotted	#2 - #14	5	0LD35521Z
335	2			1	5/16" Hex	400mcm - #6		4	Slotted	#2 - #14	5	0LD35522Z
380	3			1	3/8" Hex	500mcm - #6		4	5/32" Hex	#2 - #14	5	LFD35523Z
335	1	AL		1	5/16" Hex	400mcm - #6		6	Slotted	#2 - #14	5	0LD35531Z
335	2			1	5/16" Hex	400mcm - #6		6	Slotted	#2 - #14	5	0LD35532Z
380	3			1	3/8" Hex	500mcm - #6		6	5/32" Hex	#2 - #14	5	LFD35533Z
350	1	AL		2	5/16" Hex	2/0 - #14		6	Slotted	#4 - #14	5	0LD35551Z
350	2			2	5/16" Hex	2/0 - #14		6	Slotted	#4 - #14	5	0LD35552Z
350	3			2	3/16" Hex	2/0 - #14		6	1/8" Hex	#4 - #14	5	LFD35553Z
380	1	CU		1	Slotted	500mcm - #4		6	5/32" Hex	#2 - #14	5	0LD39531Z
380	2			1	Slotted	500mcm - #4		6	5/32" Hex	#2 - #14	5	0LD39532Z
380	3			1	Slotted	500mcm - #4		6	5/32" Hex	#2 - #14	5	0LD39533Z
350	1	CU		2	Slotted	2/0 - #14		6	1/8" Hex	#4 - #14	5	0LD39551Z
350	2			2	Slotted	2/0 - #14		6	1/8" Hex	#4 - #14	5	0LD39552Z
350	3			2	Slotted	2/0 - #14		6	1/8" Hex	#4 - #14	5	0LD39553Z
380	1	AL		1	Slotted	500mcm - #4		6	Slotted	#2 - #14	6	0LD45511Z
380	2			1	Slotted	500mcm - #4		6	Slotted	#2 - #14	6	0LD45512Z
380	3			1	Slotted	500mcm - #4		6	Slotted	#2 - #14	6	0LD45513Z
335	1	AL		1	Slotted	400mcm - #6	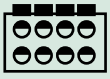	8	Slotted	#2 - #14	6	0LD45601Z
335	2			1	Slotted	400mcm - #6		8	Slotted	#2 - #14	6	0LD45602Z
335	3			1	Slotted	400mcm - #6		8	Slotted	#2 - #14	6	0LD45603Z
380	1	AL		1	Slotted	500mcm - #4	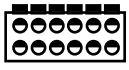	12	Slotted	#2 - #14	7	0LD55521Z
380	2			1	Slotted	500mcm - #4		12	Slotted	#2 - #14	7	0LD55522Z
380	3			1	3/8" Hex	500mcm - #4		12	5/32" Hex	#2 - #14	7	LFD55523Z
380	1	AL		1	3/8" Hex	500mcm - #4		6	5/16" Hex	2/0 - #14	7	0LD55791Z
380	2			1	3/8" Hex	500mcm - #4		6	5/16" Hex	2/0 - #14	7	0LD55792Z
380	3			1	3/8" Hex	500mcm - #4		6	3/16" Hex	2/0 - #14	7	LFD55793Z
760	1	AL		2	3/8" Hex	500mcm - #4	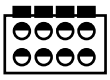	8	5/16" Hex	2/0 - #14	7	0LD55861Z
760	2			2	3/8" Hex	500mcm - #4		8	5/16" Hex	2/0 - #14	7	0LD55862Z
760	3			2	3/8" Hex	500mcm - #4		8	3/16" Hex	2/0 - #14	7	LFD55863Z
665	1	AL		1 1	3/8" Hex	500mcm - #4 350mcm - #6	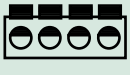	4	Slotted	2/0 - #14	7	0LD55871Z
665	2			1 1	3/8" Hex	500mcm - #4 350mcm - #6		4	Slotted	2/0 - #14	7	0LD55872Z
665	3			1 1	3/8" Hex	500mcm - #4 350mcm - #6		4	Slotted	2/0 - #14	7	0LD55873Z

Note: AL = Aluminum / CU = Copper

POWR-BLOKS™

Distribution Block Selection Guide

AMP RATING PER POLE	POLES	CONNECTOR MATERIAL	LINE CONNECTION				LOAD CONNECTION				DRAWING	CATALOG/ ORDERING NUMBER
			CONNECTOR	OPENINGS PER POLE	LUG TYPE	WIRE RANGE	CONNECTOR	OPENINGS PER POLE	LUG TYPE	WIRE RANGE		
760	1	AL		2	3/8" Hex	500mcm-#4	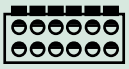	12	Slotted	#4 - #14	7	0LD55921Z
760	2			2	3/8" Hex	500mcm-#4		12	Slotted	#4 - #14	7	0LD55922Z
760	3			2	3/8" Hex	500mcm-#4		12	1/8" Hex	#4 - #14	7	LFD55923Z
380	1	AL		1	3/8" Hex	500mcm-#4	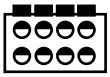	8	5/32" Hex	#2 - #14	7	0LD55941Z
380	2			1	3/8" Hex	500mcm-#4		8	5/32" Hex	#2 - #14	7	0LD55942Z
380	3			1	3/8" Hex	500mcm-#4		8	5/32" Hex	#2 - #14	7	0LD55943Z
760	1	CU		2	3/8" Hex	500mcm-#4	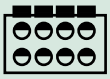	8	3/16" Hex	2/0 - #14	7	0LD59861Z
760	2			2	3/8" Hex	500mcm-#4		8	3/16" Hex	2/0 - #14	7	0LD59862Z
760	3			2	3/8" Hex	500mcm-#4		8	3/16" Hex	2/0 - #14	7	0LD59863Z
760	1	CU		2	3/8" Hex	500mcm-#4	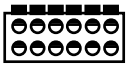	12	Slotted	#2 - #14	7	0LD59921Z
760	2			2	3/8" Hex	500mcm-#4		12	Slotted	#2 - #14	7	0LD59922Z
760	3			2	3/8" Hex	500mcm-#4		12	Slotted	#2 - #14	7	0LD59923Z
175	1	AL		1	3/16" Hex	2/0 - #14		4	1/8" Hex	#4 - #14	4	0LD25701ZXDIN
175	2			1	3/16" Hex	2/0 - #14		4	1/8" Hex	#4 - #14	4	0LD25702ZXDIN
175	3			1	3/16" Hex	2/0 - #14		4	1/8" Hex	#4 - #14	4	0LD25703ZXDIN
175	Adder			1	–	2/0 - #14		4	–	#4 - #14	4	0LD2570AZXDIN
175	1	AL		1	–	2/0 - #14	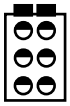	6	–	#4 - #14	4	0LD25801ZXDIN
175	2			1	5/16" Hex	2/0 - #14		6	Slotted	#4 - #14	4	0LD25802ZXDIN
175	3			1	5/16" Hex	2/0 - #14		6	Slotted	#4 - #14	4	0LD25803ZXDIN
175	Adder			1	–	2/0 - #14		6	–	#4 - #14	4	0LD2580AZXDIN
175	1	CU		1	3/16" Hex	2/0 - #14		4	Slotted	#4 - #14	4	0LD29701ZXDIN
175	2			1	3/16" Hex	2/0 - #14		4	Slotted	#4 - #14	4	0LD29702ZXDIN
175	3			1	3/16" Hex	2/0 - #14		4	Slotted	#4 - #14	4	0LD29703ZXDIN
175	Adder			1	–	2/0 - #14		4	–	#4 - #14	4	0LD2970AZXDIN

Note: AL = Aluminum / CU = Copper

Hinged Plastic Covers

Clear Plastic Covers

© 2012 Littelfuse POWR-GARD® Products Catalog

Littelfuse®
Expertise Applied | Answers Delivered

POWR-BLOKS™

Splicer Block Selection Guide

AMP RATING PER POLE	POLES	CONNECTOR MATERIAL	LINE CONNECTION				LOAD CONNECTION				DRAWING	CATALOG/ ORDERING NUMBER
			CONNECTOR	OPENINGS PER POLE	LUG TYPE	WIRE RANGE	CONNECTOR	OPENINGS PER POLE	LUG TYPE	WIRE RANGE		
310	2	AL		1	5/16" Hex	350mcm-#6		1	5/16" Hex	350mcm-#6	1	0LS03032Z
310	3			1	5/16" Hex	350mcm-#6		1	5/16" Hex	350mcm-#6	1	0LS03033Z
115	1	AL		1	Slotted	#2 - #14		1	Slotted	#2 - #14	2	0LS13001Z
115	2			1	Slotted	#2 - #14		1	Slotted	#2 - #14	2	0LS13002Z
115	3			1	5/32" Hex	#2 - #14		1	5/32" Hex	#2 - #14	2	LFS13003Z
115	4			1	Slotted	#2 - #14		1	Slotted	#2 - #14	2	0LS13004Z
150	1	CU		1	3/16" Hex	1/0 - #18		1	3/16" Hex	1/0 - #18	3	0LS21211Z
150	2			1	3/16" Hex	1/0 - #18		1	3/16" Hex	1/0 - #18	3	0LS21212Z
150	3			1	3/16" Hex	1/0 - #18		1	3/16" Hex	1/0 - #18	3	0LS21213Z
115	1	AL		1	Slotted	#2 - #14		1	Slotted	#2 - #14	3	0LS25521Z
115	2			1	Slotted	#2 - #14		1	Slotted	#2 - #14	3	0LS25522Z
115	3			1	Slotted	#2 - #14		1	Slotted	#2 - #14	3	0LS25523Z
175	1	AL		1	5/16" Hex	2/0 - #14		1	5/16" Hex	2/0 - #14	3	0LS25721Z
175	2			1	5/16" Hex	2/0 - #14		1	5/16" Hex	2/0 - #14	3	0LS25722Z
175	3			1	3/16" Hex	2/0 - #14		1	3/16" Hex	2/0 - #14	3	LFS25723Z
255	1	AL		1	5/16" Hex	250mcm-#6		1	5/16" Hex	250mcm-#6	5	0LS31231Z
255	2			1	5/16" Hex	250mcm-#6		1	5/16" Hex	250mcm-#6	5	0LS31232Z
255	3			1	5/16" Hex	250mcm-#6		1	5/16" Hex	250mcm-#6	5	0LS31233Z
255	1	CU		1	3/8" Hex	250mcm-#6		1	3/8" Hex	250mcm-#6	5	0LS31241Z
255	2			1	3/8" Hex	250mcm-#6		1	3/8" Hex	250mcm-#6	5	0LS31242Z
255	3			1	3/8" Hex	250mcm-#6		1	3/8" Hex	250mcm-#6	5	0LS31243Z
310	1	AL		1	5/16" Hex	350mcm-#6		1	5/16" Hex	350mcm-#6	5	0LS31261Z
310	2			1	5/16" Hex	350mcm-#6		1	5/16" Hex	350mcm-#6	5	0LS31262Z
310	3			1	5/16" Hex	350mcm-#6		1	5/16" Hex	350mcm-#6	5	0LS31263Z
420	1	AL		1	1/2" Hex	600mcm-#4		1	1/2" Hex	600mcm-#4	6	0LS45571Z
420	2			1	1/2" Hex	600mcm-#4		1	1/2" Hex	600mcm-#4	6	0LS45572Z
420	3			1	1/2" Hex	600mcm-#4		1	1/2" Hex	600mcm-#4	6	0LS45573Z
620	1	AL		2	5/16" Hex	350mcm-#4		2	5/16" Hex	350mcm-#4	7	0LS51291Z
620	2			2	5/16" Hex	350mcm-#4		2	5/16" Hex	350mcm-#4	7	0LS51292Z
620	3			2	5/16" Hex	350mcm-#4		2	5/16" Hex	350mcm-#4	7	0LS51293Z
760	1	AL		2	3/8" Hex	500mcm-#4		2	3/8" Hex	500mcm-#4	7	0LS53011Z
760	2			2	3/8" Hex	500mcm-#4		2	3/8" Hex	500mcm-#4	7	0LS53012Z
760	3			2	3/8" Hex	500mcm-#4		2	3/8" Hex	500mcm-#4	7	0LS53013Z
175	1	AL		1	5/16" Hex	2/0 - #14		1	5/16" Hex	2/0 - #14	4	0LS25721ZXDIN
175	2			1	5/16" Hex	2/0 - #14		1	5/16" Hex	2/0 - #14	4	0LS25722ZXDIN
175	3			1	5/16" Hex	2/0 - #14		1	5/16" Hex	2/0 - #14	4	0LS25723ZXDIN
175	Adder			1	–	2/0 - #14		1	–	2/0 - #14	4	0LS2572AZXDIN
175	1	CU		1	5/16" Hex	2/0 - #14		1	5/16" Hex	2/0 - #14	4	0LS29721ZXDIN
175	2			1	5/16" Hex	2/0 - #14		1	5/16" Hex	2/0 - #14	4	0LS29722ZXDIN
175	3			1	5/16" Hex	2/0 - #14		1	5/16" Hex	2/0 - #14	4	0LS29723ZXDIN
175	Adder			1	–	2/0 - #14		1	–	2/0 - #14	4	0LS2972AZXDIN

Note: AL = Aluminum / CU = Copper

POWR-BLOKS™

Distribution Block and Splicer Block Outline Drawings

Dimensions Inches (mm)

LX0XXX
Figure 1

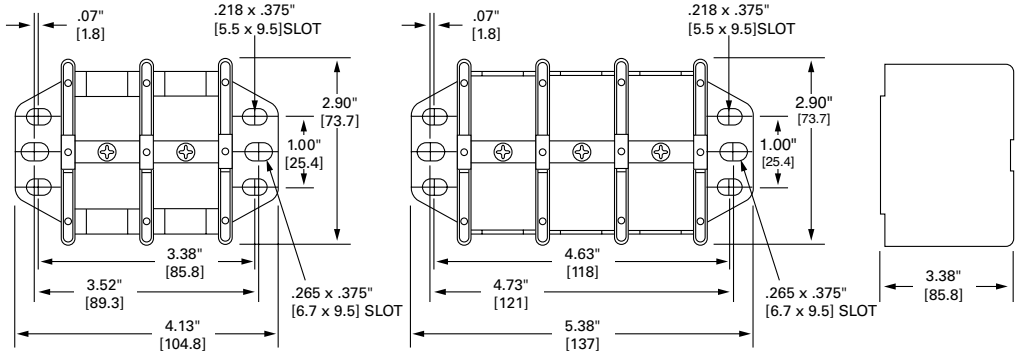

LX1XXX
Figure 2

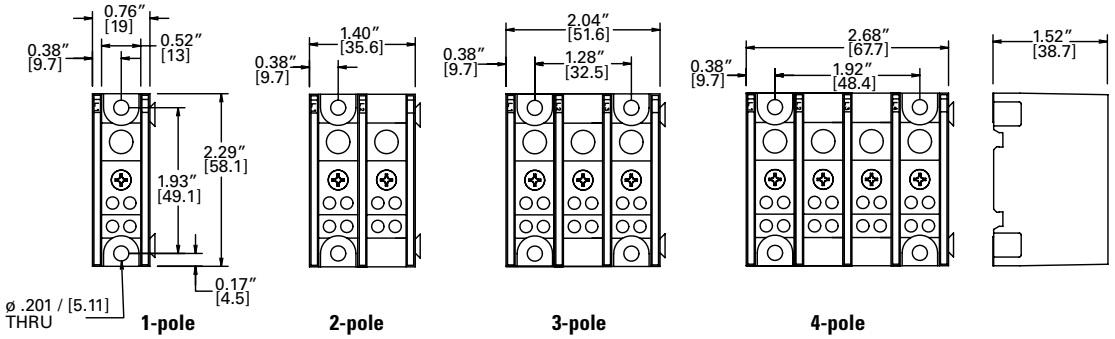

LX2XXX
Figure 3

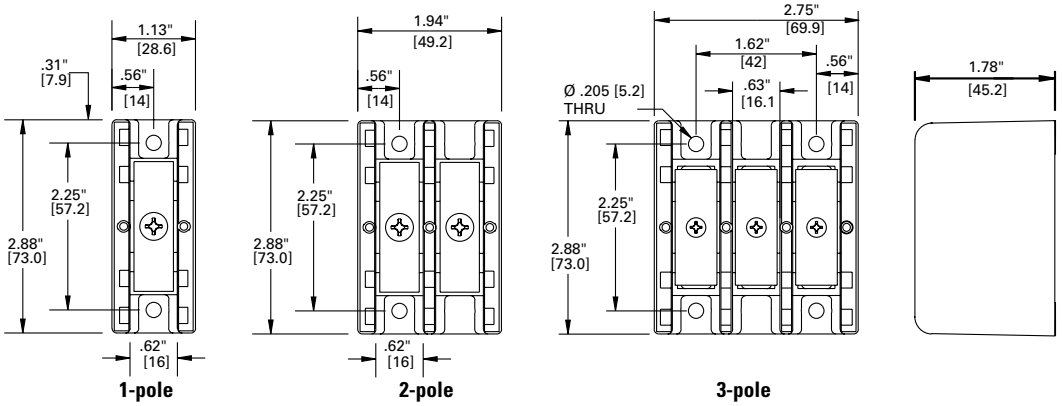

LX2XXX-XDIN
Figure 4

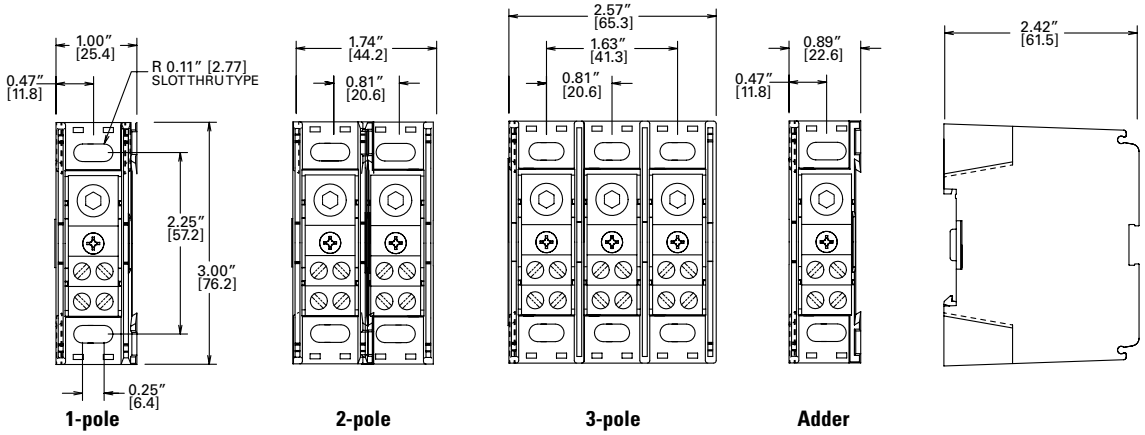

© 2012 Littelfuse POWR-GARD® Products Catalog

Littelfuse®
Expertise Applied | Answers Delivered

POWR-BLOKS™

Distribution Block and Splicer Block Outline Drawings

Dimensions Inches (mm)

LX3XXX
Figure 5

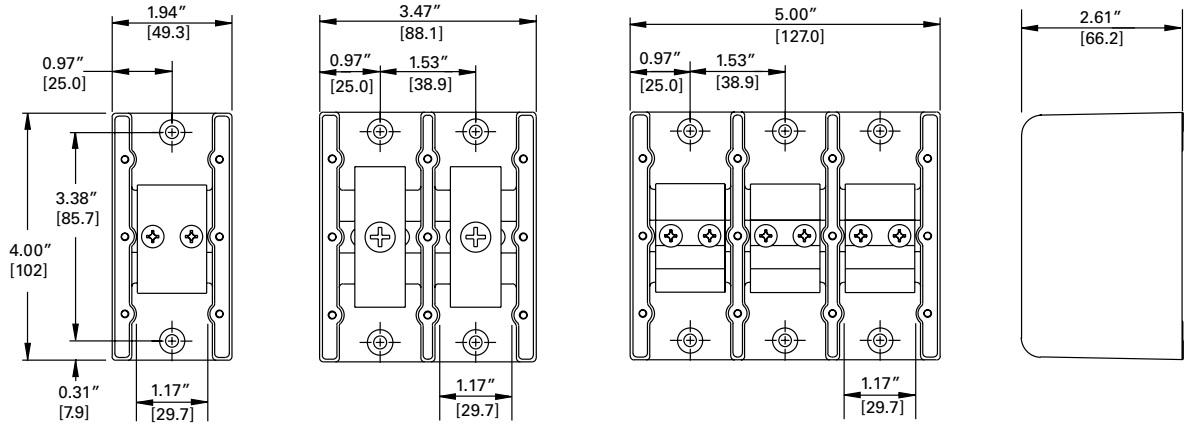

1-pole **2-pole** **3-pole**

LX4XXX
Figure 6

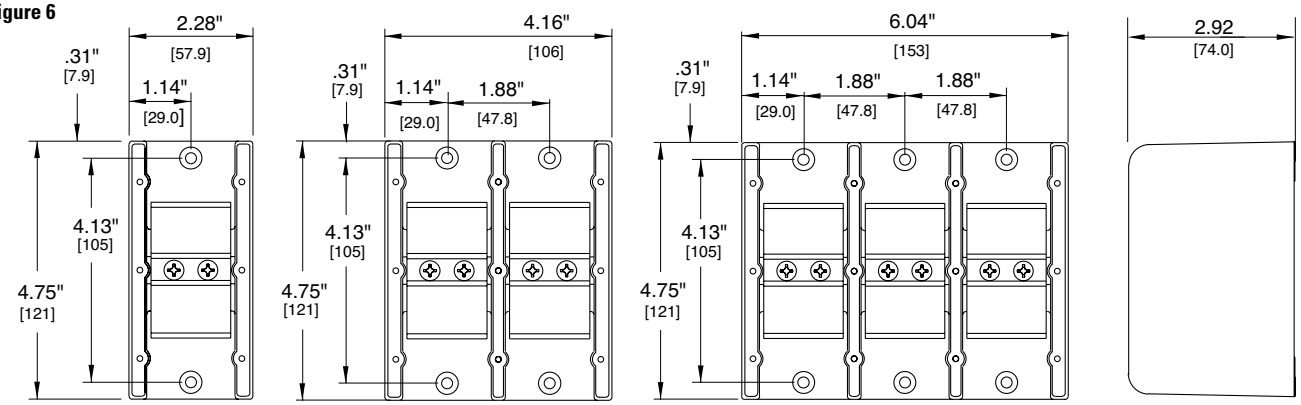

1-pole **2-pole** **3-pole**

LX5XXX
Figure 7

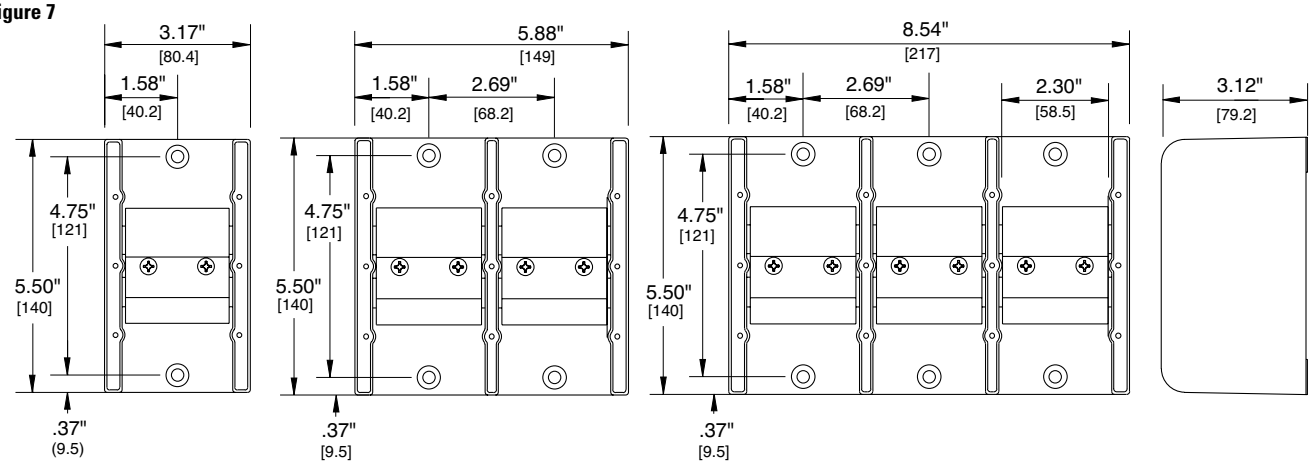

1-pole **2-pole** **3-pole**

TOUCH-SAFE POWR-BLOKS™

Global Distribution Blocks

Specifications

Voltage Rating	600 V
Ampere Rating	80 – 310 A
Material	Thermoplastic
Connector	Brass: Better continuity, Smaller design
Flammability Rating	UL94 V-0
Approvals	UL Recognized (File: E309688) c-UL Recognized* CE: IEC 60947-7-1
Environmental	RoHS compliant

Description

POWR-BLOKS™ Global Distribution Blocks add safety and mounting versatility to our distribution block solutions. The Global Distribution Blocks are approved to UL standards. The Global Distribution Blocks are IP20 finger safe to reduce the risk of contact and eliminates the need for block or panel covers. Installation is quick an easy, all blocks can be mounted on DIN rail or to the panel.

Web Resources

For dimension, CAD and 3-D drawings, visit **www.littelfuse.com/powrbloks**

Features/Benefits

- Global part meeting UL standards
- Space saving design
- Integrated touch-safe cover to increase safety
- IP20 protection rating
- Mounts to DIN rail or panels
- Reliable brass connections

Ordering Information

AMP RATING PER POLE		POLES	CATALOG/ ORDERING NUMBER	CONNECTOR MATERIAL	LINE CONNECTION					LOAD CONNECTION					DIN RAIL MOUNT
UL	IEC				OPENINGS PER POLE	OPENING DIAMETER	WIRE RANGE	TORQUE	SCREW TYPE	OPENINGS PER POLE	OPENING DIAMETER	WIRE RANGE	TORQUE	SCREW TYPE	
80	80	1	GDB60801Z	Brass	1	ø7.0 mm	#8 – #4	13.5 in-lbs	Slotted	6	2x ø7.0 mm 3x ø4.5 mm	#8 – #4 #10 – #14	13.5 in-lbs 7.2 in-lbs	Slotted	•
115	125	1	GDB61151Z	Brass	1	ø10.0 mm	#8 – #2	31 in-lbs	Hex 5 mm	6	ø7.0 mm	#14 – #4	17.5 in-lbs	Slotted	•
160	160	1	GDB61601Z	Brass	1	ø12.5 mm	#8 – 2/0	35.5 in-lbs	Hex 5 mm	6	ø7.0 mm	#14 – #4	17.5 in-lbs	Slotted	•
310	400	1	GDB63101Z	Brass	1	ø19.0 mm	3/0 – 350 kcmil	230 in-lbs	Hex 8 mm	11	2x ø9.0 mm 5x ø6.5 mm 4x ø5.3 mm	#14 – #2 #14 – #6 #14 – #8	34.1 in-lbs 19.8 in-lbs 19.8 in-lbs	Slotted	•
115	115	3	GDB61153Z	Brass	1	ø10.0 mm	#8 – #2	31 in-lbs	Hex 4 mm	6	ø6.5 mm	#14 – #4	17.5 in-lbs	Hex 3	•
175	175	3	GDB61753Z	Brass	1	ø12.0 mm	#8 – 2/0	35.7 in-lbs	Hex 5 mm	6	ø6.5 mm	#14 – #4	17.5 in-lbs	Hex 3	•

* GDB60801Z, GDB61151Z, GDB61153X, GDB61753Z Only

© 2012 Littelfuse POWR-GARD® Products Catalog

Littelfuse®
Expertise Applied | Answers Delivered

TOUCH-SAFE POWR-BLOKS™

Global Distribution Blocks

Dimensions mm

80 A
GDB60801Z

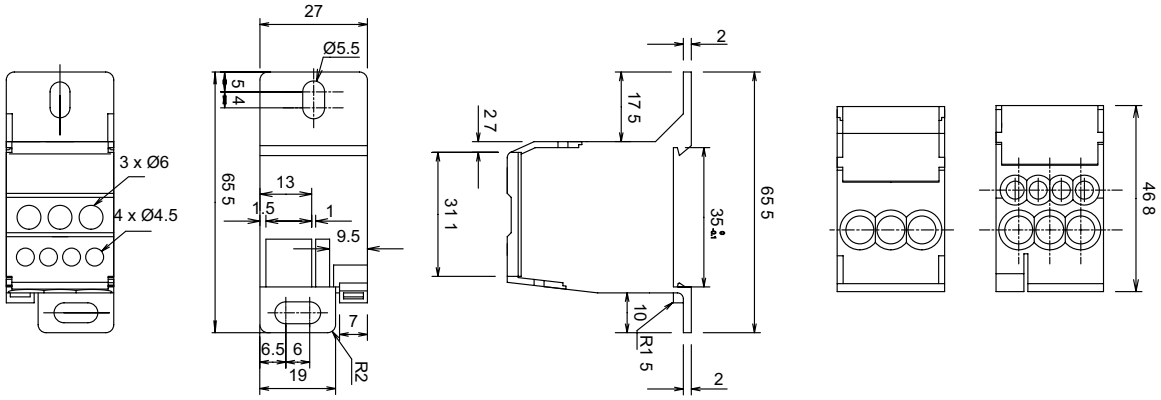

115 A
GDB61151Z

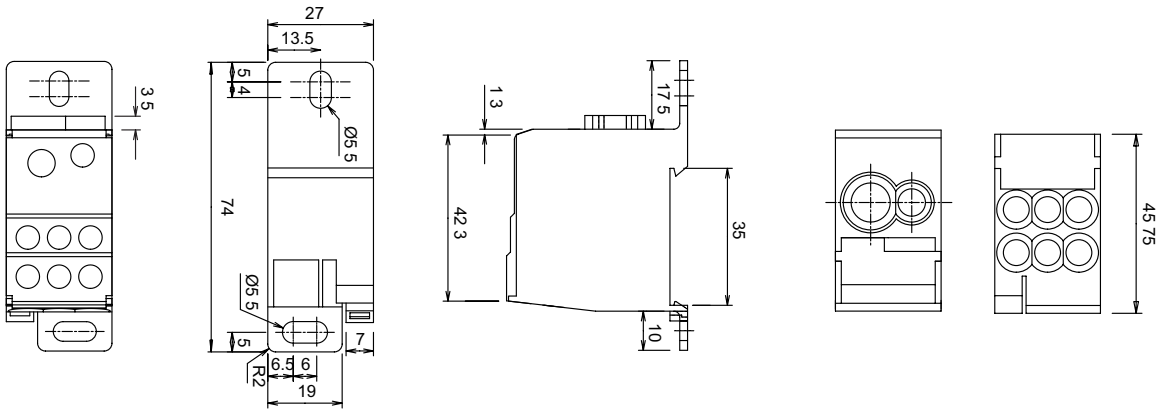

160 A
GDB61601Z

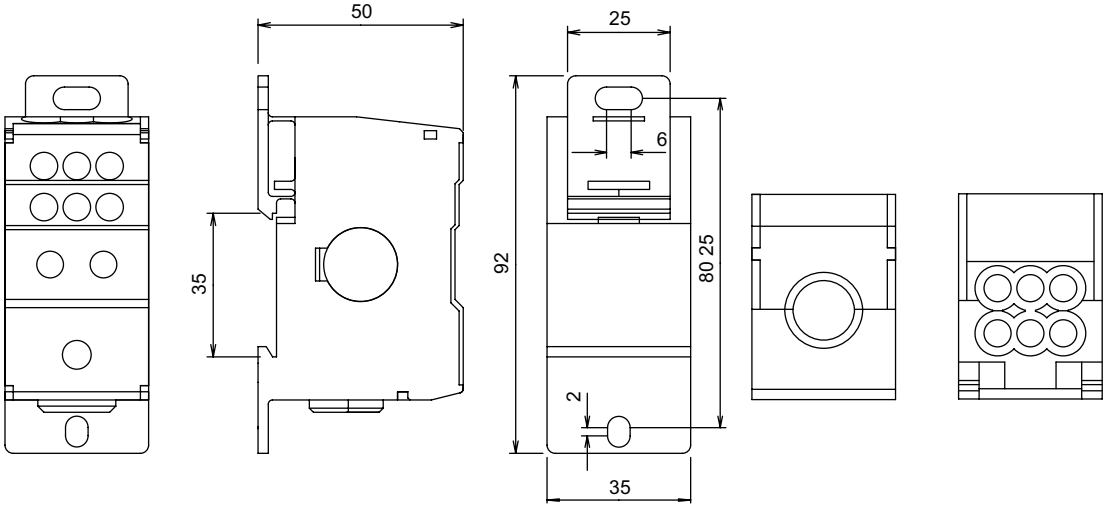

Dimensions, CAD drawings and 3-D models available at **www.littelfuse.com/powrbloks**

TOUCH-SAFE POWR-BLOKS™

Global Distribution Blocks

Dimensions mm

310 A
GDB63101Z

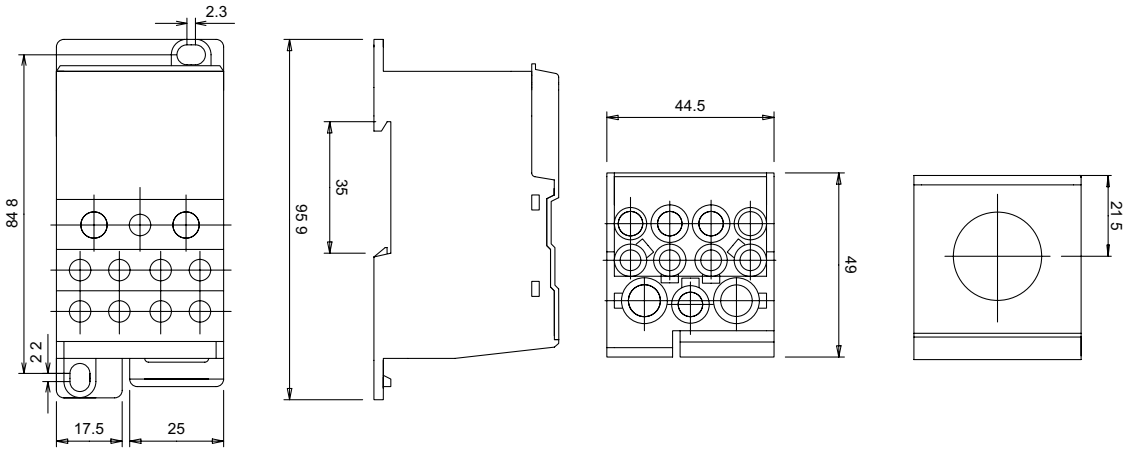

115 A
GDB61153Z

175 A
GDB61753Z

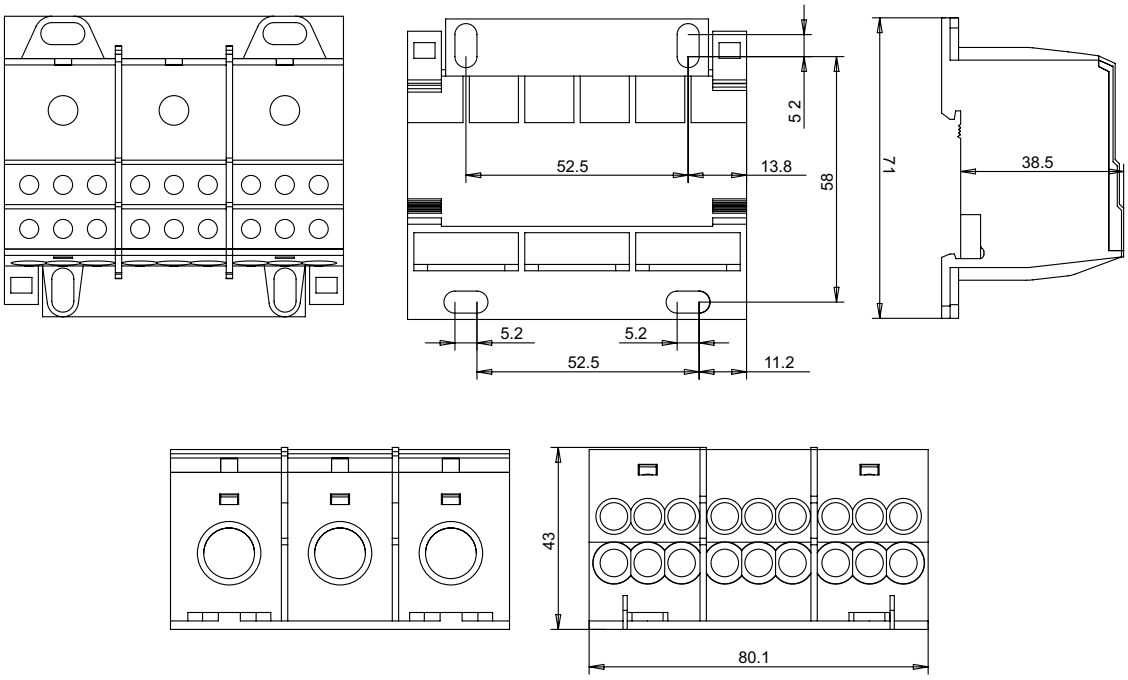

Dimensions, CAD drawings and 3-D models available at **www.littelfuse.com/powrbloks**

© 2012 Littelfuse POWR-GARD® Products Catalog

Littelfuse®
Expertise Applied | Answers Delivered

IN-LINE GLASS FUSE HOLDERS

150322

Specifications

Voltage Rating	500 VAC, 125 VDC
Ampere Rating	15 A
Fuse Type	¼" x 1¼"
Fuse Clips	Tin-plated brass
Wire	Black 18 AWG, 150° C Stranded
Molded Body	Single piece thermoplastic
Flammability Rating	UL94 V-0
Approvals	UL Recognized (File No. E14721)
Environmental	RoHS complaint, Lead (Pb) free
Storage Temperature	-40° C to 80° C
Operating Temperature	-55° C to 125° C

Ordering Information

CATALOG NUMBER	ORDERING NUMBER	STANDARD PACK
150322	01500322H	100 PIECES

Description

The 150322 is a 500 VAC/125 VDC rated inline fuse holder ideal for applications where supplemental protection is needed, such as lighting ballasts and power supplies. 8-inch pre-stripped wire leads and fuse clips come preassembled for quick installation.

Features/Benefits

- Single piece body minimizes component count
- High voltage rating accommodates many power applications
- Wire leads are pre-attached to fuse clips for quick assembly
- Single piece molded body
- UL Recognized

Recommended Fuses

3AG (312, 313 Series) 36
3AB (314, 326, 505 Series) 36

Web Resources

Sample requests, downloadable CAD drawings and other technical information: **www.littelfuse.com/150322**

Additional In-Line Glass Fuse Holders

Twist-Lock
155 Series
In-Line Mount
Low Voltage 3AG, SFE

Heavy-Duty Bayonet
155 Series
In-Line Mount
Low Voltage 3AG

Special Type
150 Series
In-Line Mount
2AG, 5x20mm

Dimensions Inches

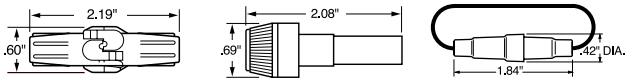

Web Resources

For more information, visit: **www.littelfuse.com/150**
www.littelfuse.com/155

Dimensions mm (inches)

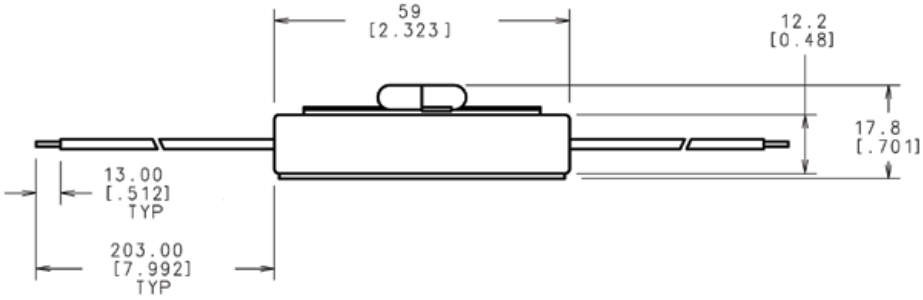

IN-LINE WATERTIGHT FUSE HOLDERS

LEB/LEX LEC/LEY

Description

Recently redesigned, the Littelfuse 600 V in-line watertight fuse holders allow maximum flexibility for high humidity/corrosive environments where fuses are required. A variety of options offer flexibility for several applications. See the list at the bottom of this page for improved part numbers.

Applications

- Street lighting and parking lot lighting
- Sports lighting and various outdoor illuminated signs
- Boat electrical circuits, tractors/yard equipment and general outdoor circuit protection (such as traffic signals, alley lighting and electric wheelchairs)

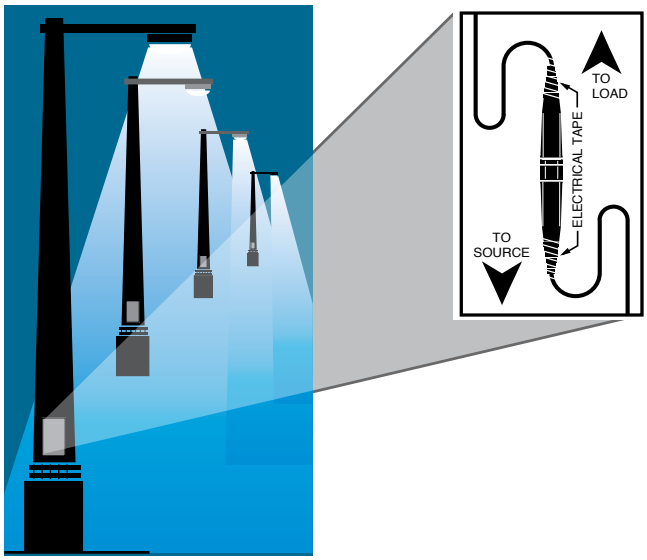

Specifications

Voltage rating	600 V
Ampere rating	up to 30 A
Interrupting rating	200 kA rms symmetrical (with Class CC fuses)
Approvals	**LEB/LEX series** UL Recognized Miscellaneous Fuse holder per UL UL 4248 (File No. E14721) CSA Certified per C22.2, No. 39 (File No. LR7316) **LEC/LEY series** UL Listed Class CC Branch Circuit Fuse holder per UL 512 (File No. E14721) CSA Certified per C22.2, No. 39 (File No. LR7316)

Features/Benefits

- Design increases safety by individual device disconnection for easy servicing, eliminating shock risk
- Increases efficiency by preventing faulted ballast from severely damaging fixture or device
- Watertight seal
- Variety of terminations available for flexible design
- Insulating boots available for harsh environments

Recommended Fuses

LEB/LEX series:

Accepts all Littelfuse Midget and Class CC series fuses

CCMR 29
KLDR, KLKR 30
BLF, BLN, FLM, FLQ, KLK, KLKD 32

LEC/LEY series:

Accepts only Littelfuse Class CC fuses

CCMR 29
KLDR, KLKR 30

Web Resources

Sample requests, downloadable CAD drawings and other technical information: **www.littelfuse.com/leb**
www.littelfuse.com/lec
www.littelfuse.com/lex
www.littelfuse.com/ley
www.littelfuse.com/let

Look for these part numbers featuring our improved design

- Better surface area for ergonomic comfort, improved grip and better torque
- More pronounced seating – automatically seats as user begins twisting
- Chamfered edges for additional installation comfort

BASE PART NUMBER	PREVIOUS ORDERING NUMBER	NEW ORDERING NUMBER
LEB-AA	0LEB00AAX	0LEB00AAXK
LEB-AA-S	0LEB0AASX	0LEB0AASXK
LEC-AA	0LEC00AAX	0LEC00AAXK
LEB-AB	0LEB00ABX	0LEB00ABXK
LEB-AYC-S	0LEBAYCSX	0LEBAYCSXK
LEB-BB	0LEB00BBX	0LEB00BBXK
LEB-JJ	0LEB00JJX	0LEB00JJXK
LEB-JJ-S	0LEB0JJSX	0LEB0JJSXK

© 2012 Littelfuse POWR-GARD® Products Catalog

Littelfuse®
Expertise Applied | Answers Delivered

IN-LINE WATERTIGHT FUSE HOLDERS

Ordering Information

To order Littelfuse in-line fuse holders and disconnects by part number, refer to the charts on the next page.

LEB - AA - S

- **Littelfuse Series**
- **Load Side/Terminal Size**
- **Line Side/Terminal Size**
- **Breakaway Feature**

FUSE HOLDER	DESCRIPTION
LEB	One-pole in-line fuse holder for Midget and Class CC fuses
LEC	One-pole in-line fuse holder for Class CC fuses
LET	One-pole in-line solid neutral disconnect
LEX	Two-pole in-line fuse holder for Midget and Class CC fuses
LEY	Two-pole in-line fuse holder for Class CC fuses

Insulating Boots

- Molded from engineering-grade thermoplastics which provide high resistance to corrosive environments
- For watertight protection of non-breakaway Y-pole termination, order one WPB1 and one WPB3 boot

ORDERING NUMBER	TERMINAL TYPE
WPB1	A, B, C, D, J
WPB3	Y

Recommended Crimping Tools

The following crimping tools or equivalents may be used on either the non-breakaway or breakaway watertight in-line fuse holders.

TERMINAL SIZE	T&B PART NUMBER	BURNDY PART NUMBER
A	WT161M	–
B	WT161M	MR4C
C	M5-GREY	Hypress Y34A
D	M5-BROWN	Hypress Y34A

Dimensions Inches

1-Pole

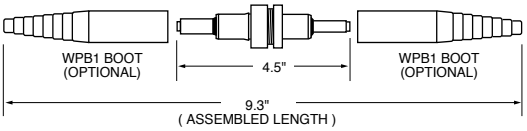

1-Pole Breakaway

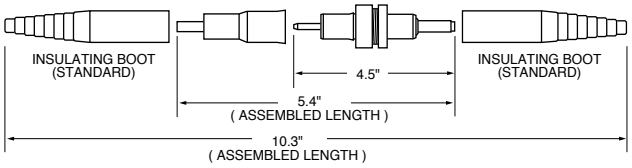

2-Pole

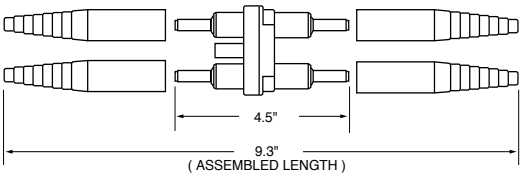

2-Pole Breakaway

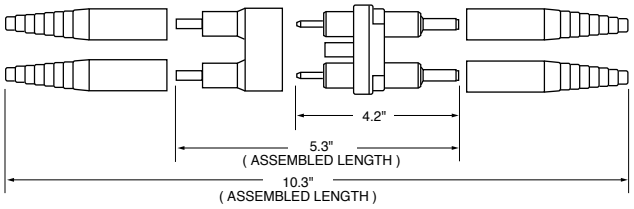

IN-LINE WATERTIGHT FUSE HOLDERS

Ordering Information (1-Pole LEB/LEC and 2-Pole LEX/LEY for Class CC and Midget Fuses)

SINGLE POLE		DOUBLE POLE		LOAD TERMINAL SELECTION					LINE TERMINAL SELECTION				
STANDARD PART NUMBER	BREAKAWAY PART NUMBER	STANDARD PART NUMBER	BREAKAWAY PART NUMBER	TERMINAL TYA PE	LOAD TERMINAL WIRE SIZE RANGE	NUMBER OF WIRES PER TERMINAL	SOLID WIRE	STRANDED WIRE	TERMINAL TYPE	LINE TERMINAL WIRE SIZE RANGE	NUMBER OF WIRES PER TERMINAL	SOLID WIRE	STRANDED WIRE
LEB-AA LEC-AA	LEB-AA-S LEC-AA-S	LEX-AA LEY-AA	LEX-AA-S LEY-AA-S	Copper Crimp	#12 to #8 #12	1 2	• •	• •	Copper Crimp	#12 to #8 #12	1 2	• •	• •
LEB-AB LEC-AB	LEB-AB-S LEC-AB-S	LEX-AB LEY-AB	LEX-AB-S LEY-AB-S	Copper Crimp	#12 to #8 #12	1 2	• •	• •	Copper Crimp	#10 #6 #4	2 1 1	• • —	• • •
LEB-AC LEC-AC	— —	LEX-AC LEY-AC	—	Copper Crimp	#12 to #8 #12	1 2	• •	• •	Copper Crimp	#8 #4	2 1	• —	• •
LEB-AD LEC-AD	— —	LEX-AD LEY-AD	— —	Copper Crimp	#12 to #8 #12	1 2	• •	• •	Copper Crimp	#6 #2	2 1	• —	• •
LEB-AJ LEC-AJ	LEB-AJ- S LEC-AJ-S	—	—	Copper Crimp	#12 to #8 #12	1 2	• •	• •	Copper Set-Screw	#12 to #8 #10 to #2	1 1	• —	— •
LEB-AYC LEC-AYC	LEB-AYC-S LEC-AYC-S	LEX-AYC LEY-AYC	LEX-AYC-S LEY-AYC-S	Copper Crimp	#12 to #8 #12	1 2	• •	• •	"Y" Type Copper Set-Screw	#12 to #8 #10 to #2	1 1	• —	— •
LEB-BA LEC-BA	LEB-BA-S LEC-BA-S	LEX-BA LEY-BA	LEX-BA-S LEY-BA-S	Copper Crimp	#10 #6 #4	2 1 1	• • —	• • •	Copper Crimp	#12 to #8 #12	1 2	• •	• •
LEB-BB LEC-BB	LEB-BB-S LEC-BB-S	LEX-BB LEY-BB	LEX-BB-S LEY-BB-S	Copper Crimp	#10 #6 #4	2 1 1	• • —	• • •	Copper Crimp	#10 #6 #4	2 1 1	• • —	• • •
LEB-BC LEC-BC	— —	LEX-BC LEY-BC	— —	Copper Crimp	#10 #6 #4	2 1 1	• • —	• • •	Copper Crimp	#8 #4	2 1	• —	• •
LEB-BD LEC-BD	— —	LEX-BD LEY-BD	— —	Copper Crimp	#10 #6 #4	2 1 1	• • —	• • •	Copper Crimp	#6 #2	2 1	• —	• •
LEB-BJ LEC-BJ	LEB-BJ-S LEC-BJ-S	— —	— —	Copper Crimp	#10 #6 #4	2 1 1	• • —	• • •	Copper Set-Screw	#12 to #8 #10 - #2	1 1	• —	— •
LEB-BYC LEC-BYC	LEB-BYC-S LEC-BYC-S	LEX-BYC LEY-BYC	LEX-BYC-S LEY-BYC-S	Copper Crimp	#10 #6 #4	2 1 1	• • —	• • •	"Y" Type Copper Set-Screw	#12 to #8 #10 - #2	1 1	• —	— •
LEB-CA LEC-CA	— —	LEX-CA LEY-CA	— —	Copper Crimp	#8 #4	2 1	• —	• •	Copper Crimp	#12 to #8 #12	1 2	• •	• •
LEB-CB LEC-CB	— —	LEX-CB LEY-CB	— —	Copper Crimp	#8 #4	2 1	• —	• •	Copper Crimp	#10 #6 #4	2 1 1	• • —	• • •
LEB-CC LEC-CC	— —	LEX-CC LEY-CC	— —	Copper Crimp	#8 #4	2 1	• —	• •	Copper Crimp	#8 #4	2 1	• —	• •
LEB-CD LEC-CD	— —	LEX-CD LEY-CD	— —	Copper Crimp	#8 #4	2 1	• —	• •	Copper Crimp	#6 #2	2 1	• —	• •
LEB-CJ LEC-CJ	— —	LEX-CJ LEY-CJ	— —	Copper Crimp	#8 #4	2 1	• —	• •	Copper Set-Screw	#12 to #8 #10 - #2	1 1	• —	• •
LEB-CYC LEC-CYC	— —	LEX-CYC LEY-CYC	— —	Copper Crimp	#8 #4	2 1	• —	• •	"Y" Type Copper Set-Screw	#12 to #8 #10 to #2	1 1	• —	— •
LEB-DA LEC-DA	— —	LEX-DA LEY-DA	— —	Copper Crimp	#6 #2	2 1	• —	• •	Copper Crimp	#12 to #8 #12	1 2	• •	— •
LEB-DB LEC-DB	— —	LEX-DB LEY-DB	— —	Copper Crimp	#6 #2	2 1	• —	• •	Copper Crimp	#10 #6 #4	2 1 1	• • —	• • •
LEB-DC LEC-DC	— —	LEX-DC LEY-DC	— —	Copper Crimp	#6 #2	2 1	• —	• •	Copper Crimp	#8 #4	2 1	• —	• •
LEB-DD LEC-DD	— —	LEX-DD LEY-DD	— —	Copper Crimp	#6 #2	2 1	• —	• •	Copper Crimp	#6 #2	2 1	• —	• •
LEB-DJ LEC-DJ	— —	LEX-DJ LEY-DJ	— —	Copper Crimp	#6 #2	2 1	• —	• •	Copper Set-Screw	#12 to #8 #10 - #8	2 1	• —	• •
LEB-DYC LEC-DYC	— —	LEX-DYC LEY-DYC	— —	Copper Crimp	#6 #2	2 1	• —	• •	"Y" Type Copper Set-Screw	#12 to #8 #10 to #8	1 1	• —	— •
LEB-JJ LEC-JJ	LEB-JJ-S LEC-JJ-S	LEX-JJ LEY-JJ	LEX-JJ-S LEY-JJ-S	Copper Set-Screw	#12 to #8 #10 to #2	1 1	• •	— •	Copper Set-Screw	#12 to #8 #10 to #2	1 1	• —	— •
LEB-JYC LEC-JYC	LEB-JYC-S LEC-JYC-S	— —	— —	Copper Set-Screw	#12 to #8 #10 to #2	1 1	• —	— •	"Y" Type Copper Set-Screw	#12 to #8 #10 to #2	1 1	• —	— •

© 2012 Littelfuse POWR-GARD® Products Catalog

Littelfuse®
Expertise Applied | Answers Delivered

IN-LINE WATERTIGHT FUSE HOLDERS

Ordering Information (Solid Neutral LET Fuse Holders)

STANDARD PART NUMBER	BREAKAWAY PART NUMBER	FUSE TYPE	LOAD TERMINAL SELECTION					LINE TERMINAL SELECTION				
			TERMINAL TYPE	LOAD TERMINAL WIRE SIZE RANGE	NUMBER OF WIRES PER TERMINAL	SOLID WIRE	STRANDED WIRE	TERMINAL TYPE	LINE TERMINAL WIRE SIZE RANGE	NUMBER OF WIRES PER TERMINAL	SOLID WIRE	STRANDED WIRE
LET-AA	LET-AA-S	Solid Neutral	Copper Crimp	#12 to #8 #12	1 2	• •	• •	Copper Crimp	#12 to #8 #12	1 2	• •	• •
LET-AB	LET-AB-S	Solid Neutral	Copper Crimp	#12 to #8 #12	1 2	• •	• •	Copper Crimp	#10 #6 #4	2 1 1	• • —	• • •
LET-AYC	LET-AYC-S	Solid Neutral	Copper Crimp	#12 to #8 #12	1 2	• •	• •	"Y" Type Copper Set-Screw	#12 to #8 #10 to #2	1 1	• —	— •
LET-BA	LET-BA-S	Solid Neutral	Copper Crimp	#10 #6 #4	2 1 1	• • —	• • •	Copper Crimp	#12 to #8 #12	1 2	• •	• •
LET-BB	LET-BB-S	Solid Neutral	Copper Crimp	#10 #6 #4	2 1 1	• • —	• • •	Copper Crimp	#10 #6 #4	2 1 1	• • —	• • •
LET-BYC	LET-BYC-S	Solid Neutral	Copper Crimp	#10 #6 #4	2 1 1	• • —	• • •	"Y" Type Copper Set-Screw	#12 to #8 #10 to #2	1 1	• —	— •
LET-JJ	LET-JJ-S	Solid Neutral	Copper Set-Screw	#12 to #8 #10 to #2	1 1	• —	— •	Copper Set-Screw	#12 to #8 #10 to #2	1 1	• —	— •
LET-JYC	LET-JYC-S	Solid Neutral	Copper Set-Screw	#12 to #8 #10 to #2	1 1	• —	— •	"Y" Type Copper Set-Screw	#12 to #8 #10 to #2	1 1	• —	— •

Ordering Information (Terminals)

TERMINAL DESIGNATION	TERMINAL DESCRIPTION	NUMBER OF WIRES PER TERMINAL	WIRE RANGE	SOLID WIRE	STRANDED WIRE
A	Copper Crimp	1 2	#12-#8 #12	• •	• •
B	Copper Crimp	2 1 1	#10 #6 #4	• • —	• • •
C	Copper Crimp	2 1	#8 #4	• —	• •
D	Copper Crimp	2 1	#6 #2	• —	• •
J	Copper Set-Screw	1 1	#12-#8 #10-#2	• —	— •
Y (2 terminals)	"Y" Style Copper Set-Screw	1 1	#12-#8 #10-#2	• —	— •

IN-LINE WATERTIGHT FUSE HOLDERS

Two-Pole Breakaway Holder

Features/Benefits

- LEXT-YY version has a permanently installed "neutral" slug to prevent the neutral from accidentally being fused
- LEX-YYC version allows for fusing of line-to-line loads or other applications requiring two fuses to disconnect under strain
- Fiberglass polymer body resists damage from impact
- Four "Y" type set-screw terminals accommodate a wide range of solid and stranded Cu or Al conductors
- O-ring and terminal boots form watertight seal, preventing leakage

Specifications

Part numbers	LEXT-YY-S (Solid neutral) LEX-YYC-S
Voltage Rating	600 VAC/VDC
Ampere Rating	30 A
Interrupting Rating	200 kA with Class CC Fuses
Y Terminals	Tin Plated Copper w/ set screws
Wire Size	1 solid #12 to #8 or 1 stranded #10 to #2
Approvals	UL Recognized (File E14721) CSA Certified (File LR7316)

Description

New Littelfuse LEXT-YY-S and LEX-YYC-S series breakaway fuse holders meet state and federal highway commission safety standards requiring fuse holders to readily disconnect from power in case of a pole knockdown.

The breakaway feature consists of a receptacle permanently attached to the power line and a fuse holder with matching terminals. If a knockdown occurs, the parts separate, leaving the energized conductor recessed and unexposed.

Applications

- Street lighting
- Marinas
- Travel trailer parks and other locations where fuse holders may be exposed to physical strain

Web Resources

Sample requests, downloadable CAD drawings and other technical information: **www.littelfuse.com/lext**
www.littelfuse.com/lex

Ordering Information

ORDERING NUMBER		FUSE TYPE	LOAD TERMINAL SELECTION					LINE TERMINAL SELECTION				
			TERMINAL TYPE	LOAD TERMINAL WIRE SIZE RANGE	NUMBER OF WIRES PER TERMINAL	SOLID WIRE	STANDARD WIRE	TERMINAL TYPE	LINE TERMINAL WIRE SIZE RANGE	NUMBER OF WIRES PER TERMINAL	SOLID WIRE	STANDARD WIRE
LEXTYYS	LEXT0YYSX	Midget Class CC	"Y" type Copper Set-Screw	#12 to #8	1	•	—	"Y" type Copper Set-Screw	#12 to #8	1	•	—
				#10 to #2	1	—	•		#10 to #2	1	—	•
LEXYYCS	0LEXYYCSX	Midget Class CC	"Y" type Copper Set-Screw	#12 to #8	1	•	—	"Y" type Copper Set-Screw	#12 to #8	1	•	—
				#10 to #2	1	—	•		#10 to #2	1	—	•

© 2012 Littelfuse POWR-GARD® Products Catalog

IN-LINE WATERTIGHT FUSE HOLDERS

Two-Pole Breakaway Holder

Dimensions Inches

LEXT-YY-S

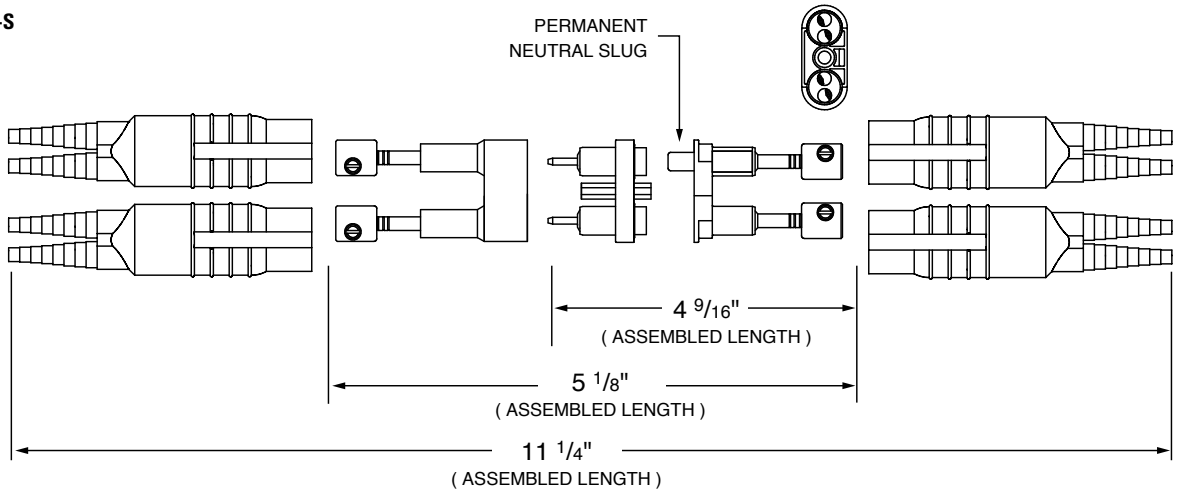

LEX-YY-C-S

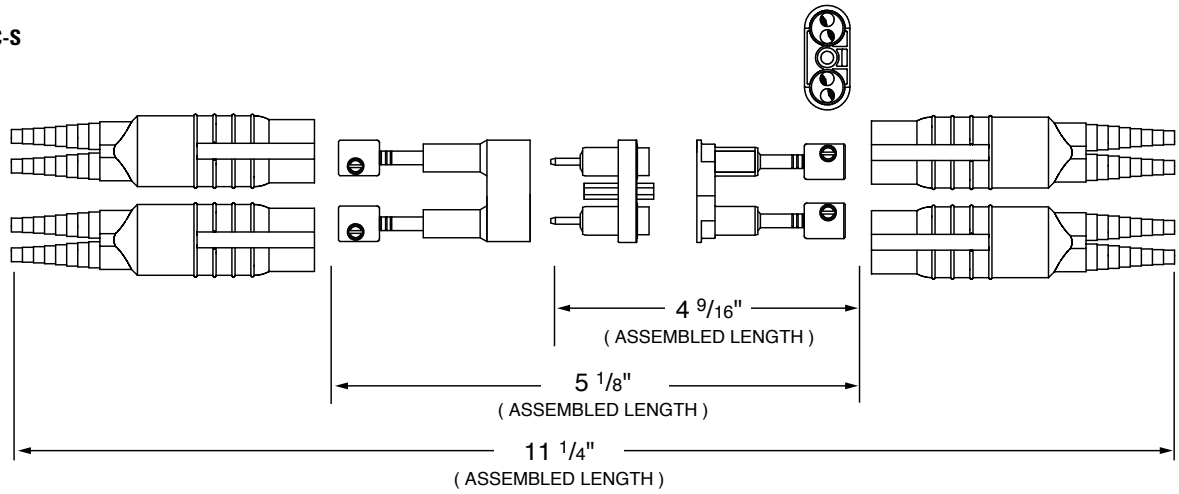

Recommended Fuses

Class CC Littelfuse types: CCMR, KLDR, KLKR 29
Midget Littelfuse types: BLF, BLN, FLM, FLQ, KLK, KLKD 32

Four WPB3 insulating boots come standard with the LEXT-YY-S and LEX-YY-C-S fuse holders. Molded from non-conductive engineering grade thermoplastic to deliver a watertight seal in corrosive environments, they can be trimmed to the specific conductor size insuring a snug fit.

Section Overview

POWR-GARD's Pre-Engineered Solutions include custom-built electrical panels designed specifically to meet NEC® requirements, as well as fused and non-fused disconnect switches.

PRE-ENGINEERED SOLUTIONS

Table of Contents

LCP Fused Selective Coordination Panel 140

LPS Series POWR-Switch (Shunt Trip Disconnect) 142

LPMP Series POWR-Switch Panel 144

Specifier Tool for LCP Coordination Panel 146

Meet NEC® Requirements and Save Time with Littelfuse Pre-Engineered Solutions

LCP Series Coordination Panel

Ideal for circuits that require selective coordination such as emergency lighting circuits or essential electrical systems.

LPS Series POWR-Switch

Individual fusible shunt trip disconnect switch easily coordinates with system's overcurrent protection. Typical applications include elevator circuits.

LPMP Series POWR-Switch Panel

Fusible panel board with shunt trip capabilities for the control of power to a bank of equipment. Typical applications include elevator circuits.

LCP FUSED COORDINATION PANEL

Selective Coordination Panel

Description

The Littelfuse® Coordination Panel provides a simple, time-saving solution for circuits that require selective coordination. This UL Listed product saves time and money, and increases safety by minimizing system downtime.

Applications

- Elevators
- Hospitals
- Hotel and Entertainment Industry
- Amusement Parks and Stadiums

Code Requirements

Systems required by the NEC® to be selectively coordinated include:

- Health Care Essential Electrical Systems (NEC 517.26)
- Elevators (NEC 620.62)
- Emergency Systems (NEC 700.27)
- Legally Required Standby Systems (NEC 701.18)
- Critical Operations Power Systems (NEC 708.54)

Features/Benefits

- Meets NEC® requirements
- Class CC and J fuse holders have built-in open-circuit indication
- Fast-acting UL Listed fuses protect against short circuits
- Feed through/sub feed lugs and 84-circuit configuration available
- Ground and neutral bars
- Copper bus standard

Advanced Design Options

- MLO, Main Circuit Breaker, or Main Fused Pullout device
- Fused Class T branch circuit pullout
- Spare fuse cabinet accessory (holds six spare fuses)
- TVSS overvoltage protection
- Any NEMA enclosure required
- High amperage sub-fed branch breakers (J60A)
- Unique Specifier Tool (see pg. 146) to easily identify panel configurations from tens of thousands of options

Specifications

Voltage Ratings	120/208, 120/240, 277/480 VAC
Main Bus Rating	100 A - 400 A Standard
Conductor Terminals	6 AWG - 300 kcmil
SCCR	100 kA Max*
UL Listed	UL 67 Panel boards and UL 50 Enclosures

*The following current-limiting fuses must be used directly upstream for 100kA SCCR.
1. 120/208 Volt Panels – LLNRK 100 A max, JTD_ID 200 A max, or JLLN 200 A max
2. 120/240 Volt Panels – LLSRK_ID 200 A max, JTD_ID 200 A max, or JLLS 200 A max
3. 277/480 Volt Panels – LLSRK_ID 200 A max, JTD_ID 200 A max, or JLLS 200 A max

Web Resources

Fuse Curves, sample requests, downloadable CAD drawings and other technical information: **www.littelfuse.com/lcp**

To quickly specify the LCP panel, visit **www.littelfuse.com/lcp** and download the Specifier Tool.

Customizable Options (select one from each column)

NUMBER OF CIRCUITS	VOLTAGE	MA N DEVICES	NEUTRAL RATING	PANEL MOUNTING	PANEL DOOR	FUSE HOLDERS	BRANCH CIRCUIT PROTECTION DEVICES (1-3 POLE)†	PANEL FEED	OPTIONAL LUGS	STANDARD ENCLOSURE RATING
2 - 42	120/208 V 3P, 4 W	125, 225, 400 or 600 A MLO	100%	Surface	Standard	30 A Class CC	10 A - 60 A fused circuit breaker	Top	None	NEMA 1
	120/240 V 1P, 3 W	Up to 600 A MCB or Main Fuse Pullout	200%	Flush	Door-in-door	60 A Class J	60 A - 200 A fused pullouts	Bottom	Sub-Fed (MLO panels)	NEMA 3R
	277/480 V 3P, 4 W						Sub-fed circuit breakers >60 A (not fused)		Feed-Through	NEMA 4X

†Fuses quoted separately to meet panel specifications. Coordination for breakers >60 A depends on upstream and downstream devices. More specialized configurations are also available. Contact factory for more information.

Note: The Littelfuse LPS, LPMP and LCP products are custom designed products that fall outside standard specifications.

© 2012 Littelfuse POWR-GARD® Products Catalog

LCP FUSED COORDINATION PANEL

Selective Coordination Panel

Dimensions mm (inches)

Standard Coordination Panel Board (up to 30 circuits)

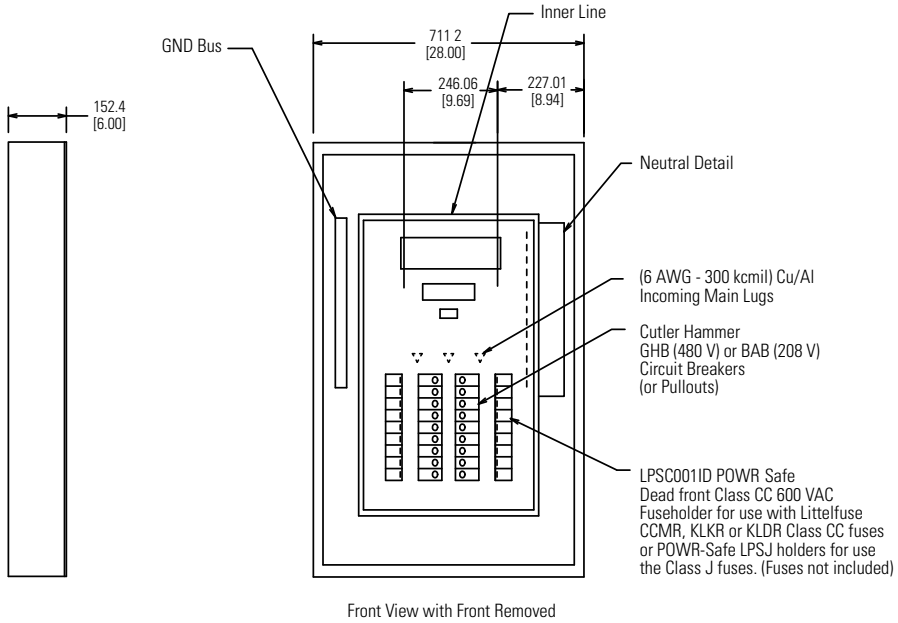

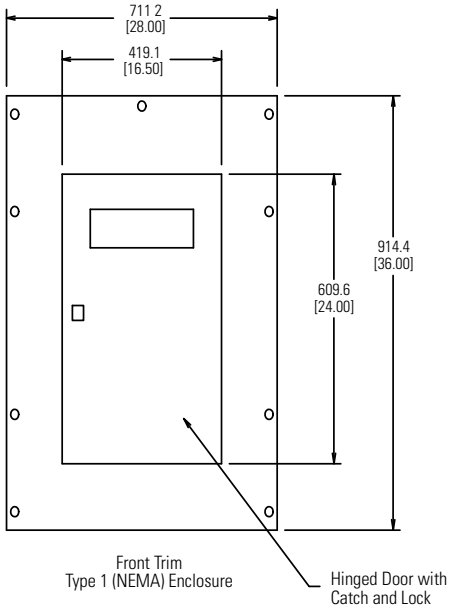

Standard Coordination Panel Board (31-42 circuits)

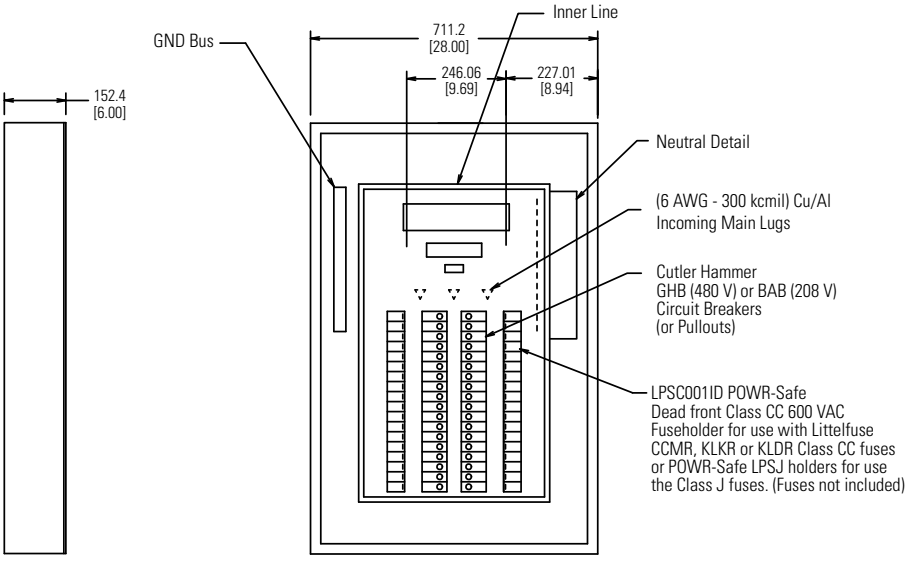

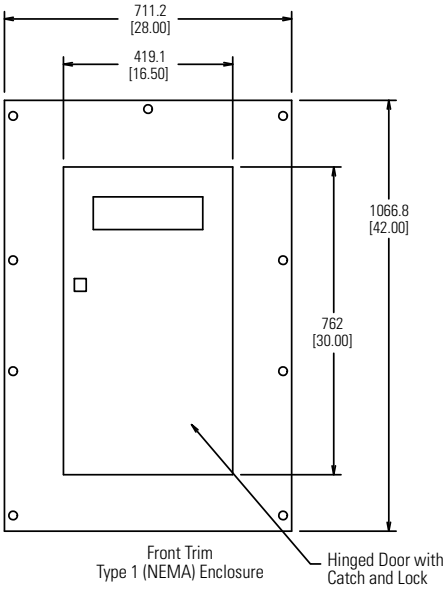

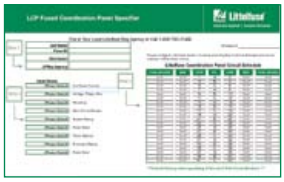

To quickly specify the LCP panel, visit **www.littelfuse.com/lcp** and download the Specifier Tool

Note: The Littelfuse LPS, LPMP and LCP products are custom designed products that fall outside standard specifications.

Dimensions may change depending on panel components.
More specialized configurations are also available.
Contact factory for more information.

LPS SERIES POWR-SWITCH

Shunt Trip Disconnect Switch

Description

The Littelfuse® POWR-Switch provides a simple and economical solution for applications that require selective coordination and shunt trip capabilities.

Utilizes Class J time-delay fuses that are easily coordinated with other system overcurrent devices. The shunt trip capability allows the POWR-Switch to meet the ANSI/ASME standard that requires power to be automatically disconnected before water is turned on by the fire safety system.

Applications

- Elevator circuits
- Data processing rooms
- Building emergency systems

Specifications

Voltage Rating*	208 V, 240 V, 480 V
Interrupting Rating	200 kA
Shunt Trip	120 V
Enclosures	NEMA 1 (standard) NEMA 3R, NEMA 4, NEMA 12 (optional)
Approvals	UL Listed CSA Certified

*Contact factory for 600 V and other options.

Features/Benefits

- Pre-engineered single unit, which makes procurement easier than systems with multiple components
- Reduces labor costs up to 66% and total installation costs by over 30%
- Optional features offer flexibility for a variety of applications
- Control power terminal block
- UL Listed package
- Lockable operating handle
- Cu and Al wire rated
- Pre-wired control circuits lower installation time
- Lockable operating handle meets all code and safety requirements
- Every unit is fully tested before delivery

Options

- Control power transformer with fuses and blocks
- Fire safety interface relay
- Key to test switch
- Pilot light "On"
- Isolated neutral lug
- Mechanical interlock auxiliary contact for hydraulic elevators with automatic recall (5 amp 120 VAC rated)
- Fire alarm voltage monitoring relay
- Option to bypass alarm when performing maintenance (AZ option)

Web Resources

Downloadable CAD drawings, Maintenance and Operation Manuals, and other technical information:
www.littelfuse.com/lps

Note: The Littelfuse LPS, LPMP and LCP products are custom designed products that fall outside standard specifications.

More specialized configurations are also available.
Contact factory for more information.

© 2012 Littelfuse POWR-GARD® Products Catalog

LPS SERIES POWR-SWITCH

Shunt Trip Disconnect Switch

Ordering Information

Complete catalog numbers consist of switch catalog numbers and the desired options. See example below.

Example Catalog Number from Desired Options

LPS1 T20 R1 K N1 U – AZ = Littelfuse Catalog Number LPS1T20R1KN1UAZ

LITTELFUSE SWITCH CATALOG NUMBER		CONTROL POWER TRANSFORMER STD. 100VA WITH PRI & SEC FUSE (120 V SEC.)		FIRE SAFETY INTERFACE RELAY (3 PDT, 10 A, 120 V)		KEY TO TEST SWITCH		PILOT LIGHT "ON"		ISOLATED NEUTRAL LUG		MECHANICAL INTERLOCK AUX. CONTACT FOR HYDRAULIC ELEVATORS W/ AUTOMATIC RECALL (5 A ,120 VAC)		FIRE ALARM SHUNT TRIP VOLTAGE MONITORING RELAY		OPTIONAL ENCLOSURES		—	AZ OPTION (BYPASS FIRE ALARM DURING MAINT. TEST)
BASE CATALOG #	RATING	RATING	OPTION CODE	RATING	OPTION CODE	RATING	OPTION CODE	RATING	OPTION CODE	RATING	OPTION CODE	RATING	OPTION CODE	RATING	OPTION CODE	RATING	OPTION CODE		OPTION CODE
LPS3*	30 A	208 V	T20	24 VDC Coil	R2	120 V	K	Red	R	30–60 A	N6	1 NO & 1 NC	A	1-Pole	F1	NEMA 3R	U	–	AZ
LPS6*	60 A	240 V	T24	120 VAC Coil	R1			Green	G	100 A	N1	2 NO & 2 NC	B	3-Pole	F3	NEMA 4	Y	–	AZ
LPS1*	100 A	480 V	T48					White	W	200 A	N2					NEMA 12	Z	–	AZ
LPS2*	200 A									400 A	N4							–	AZ
LPS4*	400 A																	–	AZ

*Part Numbers: Any voltage can be paired with any amperage. Options can be any combination but the ratings must match the option code. Not all options are required. Contact factory for details.

Contact factory for 600 V and other options.

Note: When ordering - desired options must be listed in the order shown above. Typical options include Control Power Transformer, Fire Safety Interface Relay, Mechanical Interlock Auxiliary Contact and Fire Alarm Voltage Monitoring Relay.

Dimensions of Enclosure

CATALOG SERIES	AMPERE RATING	NEMA 1 DIMENSIONS	NEMA 3R DIMENSIONS	NEMA 4, 12 DIMENSIONS	LUG SIZE
LPS3	30	24"H x 20"W x 9"D	26"H x 20"W x 8"D	24"H x 20"W x 10"D	#14 - #8 AL or CU
LPS6	60	24"H x 20"W x 9"D	26"H x 20"W x 8"D	24"H x 20"W x 10"D	#14 - #2 AL or CU
LPS1	100	24"H x 20"W x 9"D	26"H x 20"W x 8"D	24"H x 20"W x 10"D	#8 - 1/0 AL or CU
LPS2	200	30"H x 20"W x 9"D	32"H x 20"W x 8"D	30"H x 20"W x 10"D	#6 - 250kcmil AL or CU
LPS4	400	48"H x 36"W x 12"D	Contact Factory	Contact Factory	3/0 AL or CU

Note: Over-size enclosures used to accommodate control power transformer, interface relay and terminal blocks.

Specifications (Shunt Trip)

Voltage Rating 120 V, 60 Hz
Ampere Range 30-400 A
Max Inrush 4 A
Max On time 1.5 cycles
Momentary Inrush 140 VA

Note: The Littelfuse LPS, LPMP and LCP products are custom designed products that fall outside standard specifications.

More specialized configurations are also available. Contact factory for more information.

LPMP SERIES POWR-SWITCH PANEL

600 Volts • Shunt-Trip Disconnect Switch

Description

Littelfuse LPMP series POWR-Switch Panel is designed specifically for applications that require shunt-trip capabilities.

The POWR-Switch Panel offers the flexibility to incorporate multiple switches into a single panel enclosure and meet all applicable code requirements, reducing wiring costs.

Applications

- Elevator circuits
- Building emergency systems
- Hotels / Entertainment Industry
- Dormitories / Apartment Complexes

Features/Benefits

- Cost effective solution when multiple elevator switches are needed
- UL Listed package
- NEMA 1 Enclosure
- Fusible Class J Switches (rated 30 A – 400 A)
- 200 kA RMS SCCR

Optional Features

- Control Power Transformers
- Fire Safety Interface Relay
- Key to Test Switch
- Pilot Light "On"
- Mechanical Interlock Auxiliary Contact (for hydraulic elevators with recall)
- Fire Alarm Voltage Monitor Relay
- NEMA 3R Enclosures

Ordering Information

SERIES	AMPERAGE	BASE PART NUMBER	CATALOG/ ORDERING NUMBER
LPMP	400	LPMP 400	Custom
LPMP	600	LPMP 600	Custom
LPMP	800	LPMP 800	Custom

Note: Many configurations outside the standard design options can be designed. Contact factory for details

Specifications

Voltage Rating	600 V
Short-Circuit Rating	200 kA RMS
Ampere Ratings	400, 600, 800 A
Approvals	UL Listed to UL 67 Panel boards and UL 891 Dead Front Switches

Web Resources

Downloadable CAD drawings, FAQs, and other technical information: **www.littelfuse.com/lpmp**

Note: The Littelfuse LPS, LPMP and LCP products are custom designed products that fall outside standard specifications.

More specialized configurations are also available.
Contact factory for more information.

© 2012 Littelfuse POWR-GARD® Products Catalog

LPMP SERIES POWR-SWITCH PANEL

600 Volts • Shunt-Trip Disconnect Switch

Panel Spacing

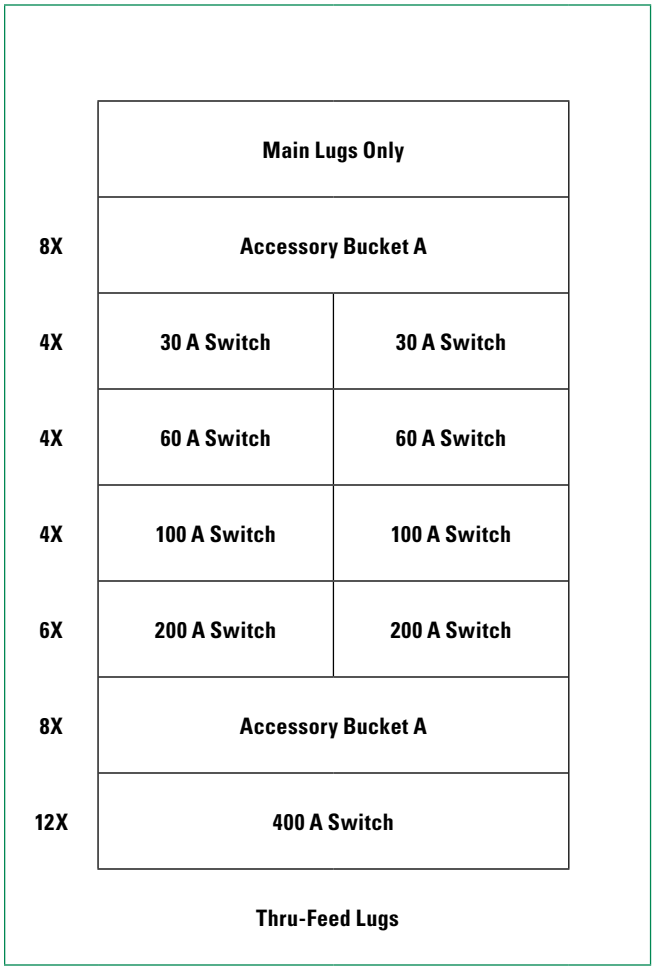

Note: Main Lug Only is standard.

Standard Panel Dimensions

DIMENSIONS (INCHES) H X W X D	AVAILABLE SPACE (X UNITS)	
	3 WIRE	4 WIRE
57 x 40 x 12	18 X	16 X
73.5 x 40 x 12	26 X	24 X
90 x 40 x 12	38 X	35 X

Note: "X" Space = 1 3/8 inches (refers to height only)

Main Lug Terminal Information

PANEL RATING	COND./ PHASE	WIRE RANGE	BENDING SPACE	
			TOP/BOT.	SIDE
400 A	(2) (1)	# 6 - 300 kcmil Al or Cu 3/0 - 750 kcmil Al or Cu	11.31"	10.00"
600 A	(2)	3/0 - 500 kcmil Al or Cu	11.31"	10.00"
800 A	(3) (2)	3/0 - 500 kcmil Al or Cu 3/0 - 750 kcmil Al or Cu	11.31"	10.00"

Note: Local codes may change minimum wire bends.

Note: The Littelfuse LPS, LPMP and LCP products are custom designed products that fall outside standard specifications.

More specialized configurations are also available.
Contact factory for more information.

POWR-Switch Panel "Bucket" Options

BUCKET/SWITCH RATING	DESCRIPTION	SPACE	CONDUCTORS PER PHASE	WIRE RANGE
30/30	Twin 30 A switches	4X	(1)	# 14 – # 8 Al or Cu
30	Single 30 A switch	4X	(1)	# 14 – # 8 Al or Cu
60/60	Twin 60 A switches	4X	(1)	# 14 – # 2 Al or Cu
60	Single 60 A switch	4X	(1)	# 14 – # 2 Al or Cu
100/100	Twin 100 A switches	4X	(1)	# 8 – 1/0 Al or Cu
100	Single 100 A switch	4X	(1)	# 8 – 1/0 Al or Cu
200/200	Twin 200 A switches	6X	(1)	# 6 – 250 kcmil Al or Cu
200	Single 200 A switch	6X	(1)	# 6 – 250 kcmil Al or Cu
400	Single 400 A switch	12X	(2)	3/0 – 750 kcmil Al or Cu
Accessory Bucket A -or- Accessory Bucket B	1 required for every 4 switches 1 required for every 6 switches	8X 12X	N/A N/A	N/A N/A

EXCEL® SPECIFIER TOOL FOR LCP COORDINATION PANEL

Simplify Communication and Minimize Errors

A Microsoft Excel® spreadsheet designed to help engineers and contractors clearly convey which technical components they would like incorporated into the Littelfuse Coordination Panel.

- Easily specify technical components of your panels/system
- Quickly and accurately captures desired electrical protection devices
- Effectively manage each job with up-to-date information
- Ensures all pertinent information is captured to prevent unnecessary delays

Get Started Today!

1. Download The Specifier from **www.littelfuse.com/lcp** or request it from your Littelfuse sales representative
2. Fill it out to identify what you need (See sample below)
3. Send it back to Littelfuse and get a quick quote
4. Automatically generate your custom Bill of Material and base part number

Easy identification for project tracking

Identify specific panel options

Automatically generates base part number

Automatically tabulates your Bill of Material to keep an accurate count

Panel circuit schedule identifies specific branch circuit protection devices each panel needs

LCP Fused Coordination Panel Specifier

Littelfuse
Expertise Applied | Answers Delivered

Fax to Your Local Littelfuse Rep Agency or Call 1-800-TEC-FUSE

Step 1

Job Name:	LCP42C-Sample
Panel ID:	H1EM1
Distributor:	Littelfuse Distributor
LF Rep Agency:	Littelfuse Reps

LF Quote # _____

Step 2

Input Values	
42	# of Panel Circuits
277/480V 3 Phase, 4 Wire	Voltage, Phase, Wire
Flush Mount	Mounting
200A Main Breaker	Main Circuit Breaker
200%	Neutral Rating
Bottom Feed	Panel Feed
Feed Through Lugs	Panel Options
Type 3R	Enclosure Rating
Door in Door	Panel Door

Step 3

Please configure individual feeder circuits by selecting fuse holder and breaker placement and size in Drop down menus.

Littelfuse Coordination Panel Circuit Schedule

FUSE HOLDER	BKR	CKT#	PH.	CKT#	BKR	FUSE HOLDER
30A CC Holder	20/1	1	A	2	**20/3**	30A CC Holder
30A CC Holder	20/1	3	B	4	**//**	30A CC Holder
30A CC Holder	20/1	5	C	6	**///3**	30A CC Holder
30A CC Holder	20/1	7	A	8	**20/3**	30A CC Holder
30A CC Holder	20/1	9	B	10	**//**	30A CC Holder
60A J Holder	**60/3**	11	C	12	**///3**	30A CC Holder
60A J Holder	**//**	13	A	14	**20/3**	30A CC Holder
60A J Holder	**///3**	15	B	16	**//**	30A CC Holder
30A CC Holder	20/1	17	C	18	**///3**	30A CC Holder
30A CC Holder	20/1	19	A	20	20/1	30A CC Holder
30A CC Holder	20/1	21	B	22	20/1	30A CC Holder
30A CC Holder	20/1	23	C	24	20/1	30A CC Holder
30A CC Holder	20/1	25	A	26	20/1	30A CC Holder
30A CC Holder	20/1	27	B	28	20/1	30A CC Holder
30A CC Holder	20/1	29	C	30	20/1	30A CC Holder
30A CC Holder	20/1	31	A	32	20/1	30A CC Holder
30A CC Holder	20/1	33	B	34	20/1	30A CC Holder
30A CC Holder	20/1	35	C	36	20/1	30A CC Holder
30A CC Holder	20/1	37	A	38	20/1	30A CC Holder
30A CC Holder	20/1	39	B	40	**60/2**	60A J Holder
30A CC Holder	20/1	41	C	42	**//2**	60A J Holder

Consult Factory when specifying 2 Pole and 3 Pole Circuit Breakers

Bill of Materials

Part Numbers			Quantity
Base Part Number:			
	LCP 42 C		1
Options From above:			
Mounting:	Flush Mount		1
Main Circuit Breaker:	200A Main Breaker		1
Neutral Rating:	200%		1
Panel Feed:	Bottom Feed		1
Panel Options:	Feed-Through Lugs		1
Enclosure Rating:	Type 3R		1
Panel Door:	Door-in-Door		1
Enter Breaker Quantities From Above Panel Schedule			
Select Poles	Breaker	Select Amperage	
1	Breaker	20	31
3	Breaker	20	3
2	Breaker	60	1
	Breaker		0
	Breaker		0
	Breaker		0
	Breaker		0
	Breaker		0
Fuseholder Quantities Calculate Automatically			
30 Amp Class CC Holder			40
60 Amp Class J Holder			2

Step 4

800-TEC FUSE www.littelfuse.com

© 2012 Littelfuse POWR-GARD® Products Catalog

Section Overview

Our comprehensive line of single- and multi-function protection relays safeguard equipment and personnel in order to prevent expensive damage, downtime or injury due to electrical faults.

The features and flexibility within the products and the software allow you to select the appropriate protection for each part of your electrical system.

PROTECTIONS RELAYS AND CONTROLS

Table of Contents

Feature Comparisons 150

Ground-Fault Protection 152

Trailing Cable Protection 155

Resistance Grounding and NGR Monitoring 156

Motor Protection 158

Pump and Feeder Protection 160

Arc-Flash Protection and GFCI 161

Generator and Single-Function Protection 162

Generator Control 167

Engine Control and Diagnosis 171

Alarm Monitoring 172

Custom Products 174

Accessories 175

Download our full Relay and Controls Catalog

For more information on relays and controls or to download our full-line relay catalog, visit

www.littelfuse.com/relayscontrols.

A Full Range of **PROTECTION RELAYS &**

Why are Protection Relays Necessary?

Protection relays safeguard critical components of an electrical circuit from damage. When the relay detects a potentially damaging or unsafe condition, the relay will send an alarm or trip signal in order to notify personnel or prevent the condition from continuing.

Protection relays increase the uptime of critical systems and enhance the safety of people and equipment during fault situations.

We Improve Electrical Safety and Increase Uptime

For decades Littelfuse has been helping customers improve their electrical systems. In addition to well-designed products, our technical expertise brings years of experience and product design support to your application.

We can provide immediate access to specialized technical resources, online references or field application support. This catalog outlines the Littelfuse line of protection relays, custom products, generator and engine controls, and alarm and annunciator systems, plus the technical capabilities we offer for your application.

Safety

Shock Hazard
Injury to Personnel
Arc-Flash Hazards
Open-CT Hazards
Failed Resistors

Cost

Fault Damage
Equipment Replacement
Calibration Costs
Compliance Citations
Motor Rewinds

Downtime

Replacement Time
Nuisance Tripping
Intermittent Faults
Unreliable Protection
Calibration Time

For All Harsh Environments

Petrochemical, Oil and Gas
Pipelines and Transportation
Aggregate and Cement
Mining
Pulp and Paper
Water and Waste Water
Shore-to-Ship Power
Marine
Data Centers
Semiconductor Equipment
Hospitals
Alternative Energy
Power Generators

CONTROLS for the Harshest Environments

GENERATOR PROTECTION & CONTROL

Our line of generator protection and control equipment offers synchronizing, frequency control, load sharing, power management, engine control and more for marine, emergency or power generation applications.

ENGINE CONTROL & MONITORING

These monitors can be configured from the front panel, a PC, or via an SD card, and support both digital and analog sensor inputs. Common alarms and shut-downs have large, user-friendly LED displays.

ARC-FLASH DETECTION

Our Arc-Flash relays can rapidly detect developing Arc-Flash incidents and send a trip signal to interrupt power before significant damage occurs.

GROUND-FAULT PROTECTION RELAYS

Improve the safety of workers and reduce incidents of Arc-Flash without affecting the uptime of critical operations. Sensitive ground-fault relays with advanced filtering will detect the breakdown in insulation resistance caused by moisture, vibration, chemicals and dust without nuisance trips.

FEEDER PROTECTION RELAYS

Protect feeder circuits from overcurrents, ground faults, phase loss or other detrimental conditions in critical applications and processes. They provide essential data for predictive and preventive maintenance—extending the life of equipment, enhancing safety and maximizing efficiency.

MOTOR & PUMP PROTECTION RELAYS

Prevent expensive damage to motors caused by overloads, jams, phase loss or unbalance, heat from non-electric sources, heavy start-ups or excessive operational cycles. Dynamic thermal curves, integrated protection, metering, and data-logging functions extend motor life and maximize process efficiency.

GENERAL PROTECTION RELAYS

These single-function, compact and cost-efficient relays are typically used on low-voltage applications. Most are DIN-rail mountable, easy to operate, install and commission. The wide-range power supply for AC and DC make these relays universal.

RESISTANCE GROUNDING & MONITORING

Overcome many of the issues experienced with solidly-grounded and ungrounded systems. High-Resistance Grounding eliminates Arc-Flash Hazards associated with ground faults and transient overvoltages, and allows for continuous operation during a ground fault.

ENGINE DIAGNOSTICS

The EngineEye diagnostic unit can improve the efficiency and performance of combustion engines by measuring and analyzing the engine combustion process. It utilizes a unique handheld high-precision indicator of cylinder pressure.

ALARM & ANNUNCIATOR PANELS

These panels monitor instantaneous current, temperature or pressure, and include local indication, alarm and event logging.

FEATURES COMPARISONS

Ground-Fault Protection Relays

FEATURE	SE-601	EL731	PGR-3100	PGR-3200	T3200	SE-502	SE-704	SE-703 SE-701	T2800	SE-107 SE-105	SE-135 SE-134C	SE-145	SE-325	SE-330AU SE-330HV SE-330
Detects GF via voltage			✔	✔		✔							✔	✔
Detects GF via current	✔	✔				✔	✔	✔	✔	✔	✔	✔	✔	✔
Detects DC GF	✔	✔												
Adjustable GF pickup	✔	✔					✔	✔	✔	✔	✔	✔	✔	✔
Adjustable time delay	✔	✔			✔		✔	✔	✔	✔	✔	✔	✔	✔
Remote reset	✔	✔		✔		✔	✔		✔	✔	✔	✔	✔	✔
Analog output	✔	✔		✔	✔		✔							✔
Fail-safe option	✔	✔				✔	✔		✔	✔	✔	✔	✔	✔
Harmonic filtering		✔		✔			✔		✔	✔	✔	✔	✔	✔
CT-Loop monitoring		✔					✔			✔	✔			
Insulation monitoring				✔	✔	✔								
Ground-check monitoring									✔	✔	✔			
Grounding-resistor monitoring													✔	✔
PTC/RTD overtemperature		✔												
Communications		✔												✔
Conformal coating	‡	✔	✔	‡	✔	‡	‡	✔	✔	✔	✔	✔	✔	✔

Arc-Flash Relays

FEATURE	D0100	D0900	PGR-8800
Current detection			✔
Point sensors	✔	✔	✔
Fiber optic sensors			✔
Cable monitoring on sensor inputs			✔
USB			✔
DC supply	✔		✔
AC supply		✔	✔
Data logging			✔

Motor & Feeder Protection Relays

FEATURE (IEEE #)	PGR-6100	PGR-6130	PGR-6150	MPU-32	MPS	PGR-6800	FPU-32	FPS
Ground fault (50G/N, 51G/N)	✔		✔	✔	✔		✔	✔
Overload (49, 51)		✔	✔	✔	✔	✔	✔	✔
Unbalance (current) (46)		✔	✔	✔	✔	✔	✔	✔
Phase loss (current) (46)		✔	✔	✔	✔	✔	✔	✔
Phase reverse (current) (46)		✔	✔	✔	✔	✔	✔	✔
PTC overtemperature (49)		✔	✔	✔	✔		✔	
Undercurrent (37)			✔	✔	✔	✔		
Jam			✔	✔	✔			
Overcurrent (50, 51)			✔	✔	✔		✔	✔
Failure to accelerate			✔	✔	✔			
RTD temperature (38, 49)				✔	✔		✔	✔
Starts per hour (66)				✔	✔			
Differential (87)				✔	✔			
Reduced overcurrent setting				✔	✔			
Phase loss (voltage) (47)					✔			✔
Phase reverse (voltage) (47)					✔			✔
Unbalance (voltage) (47)					✔			✔
Overvoltage (59)					✔		✔	✔
Undervoltage (27)					✔			✔
Power factor (55)					✔			✔
Overfrequency (81)					✔			✔
Underfrequency (81)					✔			✔
Starter control					✔			
Breaker control								✔
Underspeed (14)					✔			
Integrated CTs		✔	✔			✔		
Off-line insulation monitoring	✔							
Metering and data logging			✔	✔	✔		✔	✔
Communications			✔	✔	✔		✔	✔
Conformal coating	‡			✔	✔		✔	✔
10-year warranty				✔	✔		✔	✔

Alarm Monitors

FEATURE	M1000	M3000	M4200	M4500	M4600	M4700	M4780
Alarm panel	✔	✔	✔				
Indicator panel	✔	✔	✔	✔	✔	✔	✔
No. of inputs	10	24	8	6	8	20	20
Digital input	✔	✔*	✔	✔	✔	✔	✔
No. of open collector outputs	10	14	4				
Common alarm output†	1oc	1oc	2dryc			1dryc‡	1dryc‡
Siren output	1dryc	1oc	1dryc			1dryc‡	1dryc‡
LCD display		✔					
Configure from PC	✔	✔	✔				
Configure from DIP switches/ jumper	✔		✔			✔	✔
Configure from front panel		✔					
MODBUS-RTU (RS485)	✔	✔					
LED dimming	✔	✔	✔				
LED synchronizing	✔		✔				
Panel linking	✔						
Remote reset	✔	✔	✔				
Sensor monitoring	✔	✔	✔				
Insulation monitoring of supply voltage	✔		✔				
Monitoring of supply voltage	✔		✔				

*Both analog and digital input.
†oc=open collector; dryc=dry contact
‡Optional

NOTE:
Tables are for reference only and include standard and optional configurations.
Please see the respective catalog page for exact product specifications.
IEEE Device Numbers are shown in parenthesis after the applicable features.

© 2012 Littelfuse POWR-GARD® Products Catalog

FEATURES COMPARISONS

Generator Protection & Single-Function Relays

FEATURE (IEEE #)	PGR-4300	G2000	G3000	G3300	T2000	T2100	T2200	T2300	T2400	T2500	T2700	T2900	T3000	T3100	T3300
Overload											✔				
Overcurrent							✔		✔	✔					
Undercurrent (37)															
Short circuit								✔		✔					
Reverse power (32)		✔			✔										
Overfrequency (81)			✔										✔		
Underfrequency (81)			✔										✔		
Overvoltage (59)				✔										✔	✔
Undervoltage (27)				✔										✔	✔
Excitation loss (40)						✔									
Earth fault															
Differential current relay (87)												✔			
Insulation monitoring relay															
Single phase measurement		✔	✔		✔	✔					✔		✔	✔	
3-phase measurement				✔			✔	✔	✔	✔		✔			✔
Conformal coating						✔	✔	✔	✔	✔	✔	✔	✔	✔	✔

Engine Controls

FEATURE (IEEE #)	M2000	M2500	M2600
Start/stop	✔	✔	
Digital sensor inputs	✔	✔	✔
Analog sensor inputs		✔	
Cable monitoring on fuel/ stop solenoid output		✔	✔
Graphical display		✔	
CAN J1939		✔	
USB		✔	
SD card slot		✔	
Pick-up input	✔	✔	✔

Generator Controls

FEATURE (IEEE #)	T2600	T4500	T4800	T4900	T5000	E7800	T7900	M8100	T8400	C6200	S6000	S6100	S6610
3 phase true RMS measurement	✔	✔	✔	✔	✔			✔		✔	✔	✔	
Overcurrent										✔	✔		
Short circuit										✔	✔		
Overload										✔	✔		
Reverse power (32)			✔							✔	✔		
Excitation loss (40)										✔	✔		
Overfrequency (81)										✔	✔	✔	
Underfrequency (81)										✔	✔	✔	
Overvoltage (59)										✔	✔	✔	
Undervoltage (27)										✔	✔	✔	
ROCOF (81)										✔	✔		
Vector shift										✔			
Preferential load trip										✔	✔		
Synchronizing (25)		✔								✔		✔	
Check synchronizer (25)					✔			✔		✔		✔	
Active load sharing [kW]			✔							✔		✔	
Reactive load sharing [kVAR]				✔						✔		✔	
Power factor regulation				✔						✔		✔	
Dead bus monitoring/ black out limiter								✔		✔		✔	
Load depending start/stop (PM)	✔									✔			✔
Large consumer control (PM)										✔			✔
Dynamic grid-parallel operation control										✔		✔	
MODBUS RTU (RS485 interface)										✔	✔	✔	✔
Motorized potentiometer						✔							
Electronic potentiometer							✔						
Dead bus closure									✔				

Engine Diagnostics

FEATURES	BASIC E5000 & E5100	ADVANCED E5000, E5100 & E5200	PROFESSIONAL E5000, E5100, E5200 & 5300
USB	✔	✔	✔
Color LCD	✔	✔	✔
PC software included	✔	✔	✔
Upgradable	✔	✔	✔
Temperature compensation	✔	✔	✔
Calibration-check integration	✔	✔	✔
Connecting sensor ports	1	2	5
Pressure graph	✔	✔	✔
MIP mode		*	✔
Misfire analysis		✔	✔
p^{max}		✔	✔
p/time	✔	✔	✔
p^{max} bar graph		✔	✔
p/alpha		*	✔
dp/alpha		*	✔
p/V		*	✔
Pressure sensor	✔	✔	✔
Crank-angle sensor			✔
Maximum engines (memory)	5	10	20
Maximum cylinders/ engine (memory)	20	20	20
Maximum number of strokes (memory)	30	30	30

NOTE: These tables are for reference only and include standard and optional configurations.

*Possible with a crank angle sensor E5300.

GROUND-FAULT PROTECTION

SE-601 (PGR-2601) DC Ground-Fault Relay
For Ungrounded DC Systems

Features/Benefits
- Sensitive 1- to 20-mA trip settings
- A microprocessor-based ground-fault relay for ungrounded dc systems
- 50-ms to 2.5-s time-delay settings
- Limits ground-fault current to 25 mA
- Form-A and Form-B trip contacts

Specifications

IEEE Device Number	76G
Dimensions	**H** 75 mm (3.0”) **W** 55 mm (2.2”) **D** 115 mm (4.5”)
Communications	Analog Output
Warranty	5 Year

Web Resources
www.littelfuse.com/se-601

ORDERING NUMBER	SPECIFICATIONS	ACCESSORIES
SE-601-OD	24 Vdc Control Power	SE-GRM Series Ground Reference Modules PGA-0500 Analog Current Meter
SE-601-OT	48 Vdc Control Power	
SE-601-OU	120/240 Vac/dc 50/60 Hz Control Power	

PGR-3100 Ground-Fault Indication System
For Ungrounded AC Systems

Features/Benefits
- Meets NEC® Article 250.21 (B)
- Indicates the presence of voltage on each phase of a three-phase system by illuminating the LEDs
- Indicates ground-fault and phase
- Lamp test button to verify operation
- Redundant long-life LEDs

Specifications

IEEE Device Numbers	27, 64
Dimensions	**H** 108 mm (4.3”) **W** 88.9 mm (3.5”) **D** 54 mm (2.1”)
Warranty	5 Year

Web Resources
www.littelfuse.com/pgr-3100

ORDERING NUMBER	SPECIFICATIONS	ACCESSORIES
PGR-3100	Panel Mount	—

PGR-3200 Ground-Fault Protection System
For Ungrounded AC Systems

Features/Benefits
- Meets NEC Article 250.21 (B)
- Continuously monitors the insulation integrity of ungrounded electrical systems for ground faults
- Provides 2 warnings and 1 alarm
- Analog output for insulation reading

Specifications

IEEE Device Number	27, 64
Dimensions	**H** 99.7 mm (3.9”) **W** 75 mm (4.3”) **D** 110 mm (4.3”)
Communications	Analog Output
Warranty	5 Year

Web Resources
www.littelfuse.com/pgr-3200

ORDERING NUMBER	SPECIFICATIONS	ACCESSORIES
PGR-3200	240 Vac Control Power	PGH family High Tension Couplers PGA-0510 Analog Insulation Meter

© 2012 Littelfuse POWR-GARD® Products Catalog

GROUND-FAULT PROTECTION

SE-701 (PGR-5701) Ground-Fault Relay
For Solidly and Resistance-Grounded Systems

Features/Benefits
- Choice of input CT gives wide setting range
- A microprocessor-based ground-fault relay for resistance-grounded and solidly grounded systems
- Microprocessor-based unit with DFT
- Non-volatile trip memory retains trip state
- Compatible with VFD applications
- Adjustable pick-up settings from 1% to 99% of CT primary rating, as low as 50 mA
- Adjustable time-delay settings from 0.5 to 2.5 sec

Specifications

IEEE Device Numbers	50G, 50N, 51G, 51N
Dimensions	**H** 75 mm (3.0”) **W** 55 mm (2.2”) **D** 115 mm (4.5”)
Communications	Analog Output
Warranty	5 Year

Web Resources
www.littelfuse.com/se-701

ORDERING NUMBER	SPECIFICATIONS	ACCESSORIES
SE-701-OD	9-36 Vdc Control Power	Ground Fault Current Transformers PGA-0500 Analog Current Meter
SE-7701-OT	32-70 Vdc Control Power	
SE-701-OU	75-275 Vac/dc Control Power	

SE-703 Earth Leakage Monitor
For Solidly and Resistance-Grounded Systems

Features/Benefits
- Provides sensitive ground-fault protection
- A microprocessor-based ground-fault relay for resistance-grounded and solidly earthed systems
- Microprocessor-based unit with DFT
- Non-volatile trip memory retains trip state
- Compatible with VFD applications
- Adjustable pick-up settings from 25 mA to 500 mA
- Adjustable time-delay settings from 50 to 500 ms

Specifications

IEEE Device Numbers	50G, 50N, 51G, 51N
Dimensions	**H** 75 mm (3.0”) **W** 55 mm (2.2”) **D** 115 mm (4.5”)
Communications	Analog Output
Warranty	5 Year

Web Resources
www.littelfuse.com/se-703

ORDERING NUMBER	SPECIFICATIONS	ACCESSORIES
SE-703-OU	9-36 Vdc Control Power	EFCT series Current Transformers PGA-0500 Analog Current Meter
SE-703-OT	32-70 Vdc Control Power	
SE-703-OU	75-275 Vac/Vdc Control Power	

SE-704 (PGR-4704) Earth Leakage Monitor
For Solidly and Resistance-Grounded Systems

Features/Benefits
- Provides very sensitive ground-fault protection
- Microprocessor-based unit with DFT
- Non-volatile trip memory retains trip state
- Compatible with VFD applications
- Adjustable pick-up settings from 10 mA to 5 A
- Adjustable time-delay settings from
- 0.5 to 2.5 sec

Specifications

IEEE Device Numbers	50G, 50N, 51G, 51N
Dimensions	**H** 75 mm (3.0”) **W** 55 mm (2.2”) **D** 115 mm (4.5”)
Communications	Analog Output
Warranty	5 Year

Web Resources
www.littelfuse.com/se-704

ORDERING NUMBER	SPECIFICATIONS	ACCESSORIES
SE-704-24	9-36 Vdc Control Power	SE-CS30 series Current Transformers PGA-0500 Analog Current Meter
SE-704-120	32-70 Vdc Control Power	
SE-704-240	75-275 Vac/Vdc Control Power	

GROUND-FAULT PROTECTION

T2800 Earth-Fault Relay
For Solidly and Resistance-Grounded Systems

Features/Benefits
- Accepts high supply voltage variation
- Visual indication of power, pick-up and output trip
- Direct line-line or line-neutral voltage supply
- Wide range of combined current and delay settings
- DIN-rail or Screw-mount

Specifications
Trip Level 0.02-0.2 x I_N or 0.2-2 x I_N
Delay 0.1-1 sec or 1-10 sec
Dimensions **H** 70 mm (2.76")
W 100 mm (3.94")
D 115 mm (4.52")

Web Resources
www.littelfuse.com/t2800

ORDERING NUMBER	TERMINALS		I_N
	1-3	2-3	
T2800-00	230 V		5 A
T2800-01	450 V	400 V	5 A
T2800-02	127 V	120 V	5 A
T2800-04	24V DC+AC		5 A
T2800-05	480 V	415 V	5 A
T2800-08	230 V		1 A

EL731 AC/DC Sensitive Earth-Leakage
For Solidly-Grounded Systems

Features/Benefits
- Microprocessor based relay that offers complete coverage for all frequencies
- Adjustable trip settings provide wide range protection and coordination
- Operate in both AC or DC mode and single or combined ranges
- LED indication for visual trip, alarm and CT

Specifications
IEEE Device Numbers 38, 49, 50G/N, 51G/N, 79G
Dimensions **H** 48 mm (1.9")
W 96 mm (3.8")
D 129 mm (5.0")
Warranty 5 Years

Web Resources
www.littelfuse.com/el731

ORDERING NUMBER	CONTROL POWER	COMMUNICATIONS
EL731-00-00	120/240-Vac/Vdc	None
EL731-01-00	120/240-Vac/Vdc	DeviceNet™
EL731-02-00	120/240-Vac/Vdc	Profibus®
EL731-03-00	120/240-Vac/Vdc	Ethernet
EL731-04-00	120/240-Vac/Vdc	Modbus
EL731-10-00	48 Vdc & 24 Vac	None
EL731-11-00	48 Vdc & 24 Vac	DeviceNet™
EL731-12-00	48 Vdc & 24 Vac	Profibus®
EL731-13-00	48 Vdc & 24 Vac	Ethernet
EL731-14-00	48 Vdc & 24 Vac	Modbus

ORDERING NUMBER	CONTROL POWER	COMMUNICATIONS
EL731-20-00	24 Vdc	None
EL731-21-00	24 Vdc	DeviceNet™
EL731-22-00	24 Vdc	Profibus®
EL731-23-00	24 Vdc	Ethernet
EL731-24-00	24 Vdc	Modbus

T3200 Double Insulation Monitoring Relay
For Solidly-Grounded Systems

Features/Benefits
- Continuously monitors two systems galvanically separated from each other
- Ensures correct operation in spite of voltage supply fluctuations
- Visual indication of power pick-up, and output trip

Specifications
Insulation Level 0-5 MW
Max Voltage 660 V
Dimensions **H** 70 mm (2.75")
W 100 mm (3.94")
D 115 mm (4.52")

Web Resources
www.littelfuse.com/t3200

ORDERING NUMBER	1-3 TERMINALS	2-3 TERMINALS	ACCESSORIES
T3200.0010	230 V		E2333 Megaohmmeter
T3200.0020	450 V	400 V	
T3200.0030	480 V	415 V	
T3200.0050	110 V	100 V	
T3200.0060	127 V	120 V	

© 2012 Littelfuse POWR-GARD® Products Catalog

TRAILING CABLE PROTECTION

SE-105 • SE-107 Ground-Fault Ground-Check Monitor

Features/Benefits

- Adjustable pickup so unit can be used on a wide variety of trailing cable applications
- Adjustable time delay for quick protection and system coordination
- Harmonic filter prevents false operation

Specifications

IEEE Device Numbers	3GC, 50G/N, 51G/N
Dimensions	**H** 50 mm (5.9")
	W 109 mm (4.3")
	D 100 mm (4.0")
Warranty	5 Years

Web Resources

www.littelfuse.com/se-105
www.littelfuse.com/se-107

ORDERING NUMBER	CONTROL POWER	ACCESSORIES
SE-105	120 Vac	CT200 Series Current Transformer 1N5339B Termination Assembly SE-TA6 Termination Assembly SE-TA6-SM Stud-Mount Termination Assembly
SE-105D	120 Vac/Vdc	
SE-105E	240 Vac	
SE-107	120 Vac	
SE-107D	120 Vac/Vdc	
SE-107E	240 Vac	

SE-134C (PGM-8134C) • SE-135 Ground-Fault Ground-Check Monitor

Features/Benefits

- Fail-safe ground check circuit
- Combination ground-wire monitor and ground-fault relay
- Zener-characteristic termination device
- High-induced-ac rejection
- DFT (harmonic) filter

Specifications

IEEE Device Numbers	3GC, 50G, 50N, 51G, 51N
Dimensions	**H** 213 mm (8.4")
	W 99 mm (3.9")
	D 145 mm (5.7")
Warranty	5 Year

Web Resources

www.littelfuse.com/se-134c
www.littelfuse.com/se-135

ORDERING NUMBER	SPECIFICATIONS	ACCESSORIES
SE-134C-00	60-265 Vac; 80-370 Vdc	SE-CS10 Ground-Fault Current Transformer SE-TA6A Series Termination Assembly SE-TA12A Series Termination Assembly
SE-135-00	60-265 Vac; 80-370 Vdc	

SE-145 Ground-Fault Ground-Check Monitor

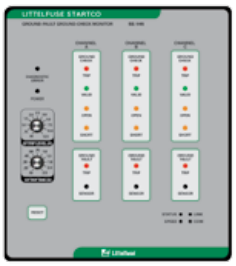

Features/Benefits

- Adjustable pick can be used on a wide variety of trailing cable applications
- Adjustable time delay for quick protection and system coordination
- Separate annunciations of ground-fault and ground-check faults

Specifications

IEEE Device Number	3GC, 50G, 50N, 51G, 51N
Dimensions	**H** 213 mm (8.4")
	W 192 mm (7.6")
	D 176 mm (7.0")
Communications	Ethernet Optional
Warranty	5 Year

Web Resources

www.littelfuse.com/se-145

ORDERING NUMBER	CONTROL POWER	COMM
SE-145-00-00	60-265 Vac; 80-370 Vdc	SE-CS10 Series Ground-Fault Current Transformer SE-CS40 Series Ground-Fault Current Transformer SE-TA12A Series Termination Assembly
SE-145-00-10	24/48 Vdc	
SE-145-03-00	60-265 Vac; 80-370 Vdc	
SE-145-03-10	24/48 Vdc	

RESISTANCE GROUNDING AND NGR MONITORING

SE-325 (PGM-8325) Neutral-Grounding-Resistor Monitor

Description

The SE-325 Neutral-Grounding-Resistor Monitor is used on resistance-grounded systems up to 25 kVac to monitor the integrity of the neutral-to-ground path for loose connection, corrosion, and ground faults.

Features/Benefits

- Adjustable ground-fault detection
- Adjustable time-delay settings
- Selectable fail-safe mode
- Conformally coated circuit boards

Specifications

IEEE Device Numbers	50G/N, 51G/N, 59N, 86, 3
Dimensions	**H** 150 mm (5.9") **W** 109 mm (4.3") **D** 100 mm (4.0")
Warranty	5 Year

Web Resources

www.littelfuse.com/se-325

ORDERING NUMBER	SPECIFICATIONS	ACCESSORIES
SE-325	120 Vac	CT200 Series Current Transformers ER Series Sensing Resistors
SE-325D	120 Vdc	
SE-325E	240 Vac	

SE-330AU Neutral-Grounding-Resistor Monitor

Description

An advanced ground-fault and ground-resistor monitoring relay for low and medium-voltage transformers and generators. The SE-330AU complies with AS/NZS 2081.3:2002.

Features/Benefits

- Continuous NGR monitoring
- Detect ground-fault anywhere on monitored system
- Adjustable pickup settings
- Adjustable time delay settings

Specifications

Dimensions	**H** 213 mm (8.4") **W** 98 mm (3.9") **D** 132 mm (5.2")
Communications	RS-232; DeviceNet™, Profibus®, Ethernet
Warranty	5 Year

Web Resources

www.littelfuse.com/se-330au

ORDERING NUMBER	SPECIFICATIONS	ACCESSORIES
SE-330AU-00-00	80-265 Vac/Vdc	ER Series Sensing Resistor EFCT Series Ground-Fault Current Transformer SE-CS30 Series Ground-Fault Current Transformer
SE-330AU-01-00	80-265 Vac/Vdc	
SE-330AU-02-00	80-265 Vac/Vdc	
SE-330AU-03-00	80-265 Vac/Vdc	

SE-330 (PGR-5330), SE-330HV Neutral-Grounding-Resistor Monitor

Description

An advanced ground-fault and grounding-resistor monitoring relay. It measures neutral current, neutral-to-ground voltage and neutral-to-ground resistance.

Features/Benefits

- Continuous NGR monitoring
- Detect ground-fault anywhere on monitored system
- Adjustable pickup (2-100%)
- Adjustable time delay (0.1 - 10s)

Specifications

IEEE Device Numbers	50G/N, 51G/N, 59N, 3, 86
Dimensions	**H** 213 mm (8.4") **W** 98 mm (3.9") **D** 132 mm (5.2")
Communications	RS-232; DeviceNet™, Profibus®, Ethernet
Warranty	5 Year

Web Resources

www.littelfuse.com/se-330

ORDERING NUMBER	SPECIFICATIONS	ACCESSORIES
SE-330-00-00	80-265 Vac/dc	ER Series Sensing Resistor EFCT Series Ground-Fault Current Transformer SE-CS30 Series Ground-Fault Current Transformer
SE-330-01-00	80-265 Vac/dc	
SE-330-02-00	80-265 Vac/dc	
SE-330-03-00	80-265 Vac/dc	

© 2012 Littelfuse POWR-GARD® Products Catalog

RESISTANCE GROUNDING AND NGR MONITORING

SE-502 Ground-Fault Ground-Continuity Detector

Description

Provides Class-A GFCI trip level and trip times for personnel protection.

Features/Benefits

- Sensitive ground-fault detection
- Internal neutral-grounding resistor eliminates arc-flash hazards
- Neutral-to-ground connection monitoring can detect a hazardous ungrounded condition

Specifications

IEEE Device Numbers	64, 86, 95
Dimensions	**H** 75 mm (3.0")
	W 100 mm (4.0")
	D 113 mm (4.4")
Warranty	5 Year

Web Resources

www.littelfuse.com/se-502

ORDERING NUMBER	CONTROL POWER
SE-502-01	120 Vac

PGN-1000
Low-Resistance Grounding System

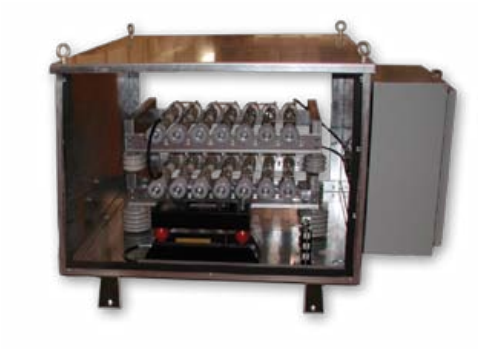

Low-Resistance grounding is typically applied on transformers and generators, and limits the ground-fault current to 25 A and above. Since ground-fault current is above 25 A, the faulted feeder must be de-energized. The reduced ground-fault current allows for an orderly shut-down procedure, typically within 10 seconds.

Web Resources

For more information on Resistance Grounding Systems, visit **www.littelfuse.com/pgn-1000**

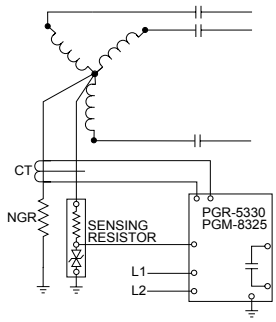

PGN-3000
High-Resistance Grounding System

High-Resistance grounding is typically applied on transformers and generators, and limits the ground-fault current to 10 A or less. Since ground-fault current is below 10 A, the faulted feeder can remain in operation. The reduced ground-fault current allows for an orderly shut-down procedure.

Web Resources

For more information on Resistance Grounding Systems, visit **www.littelfuse.com/pgn-3000**

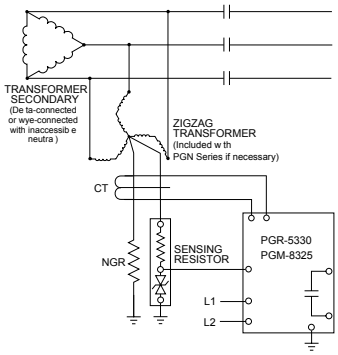

MOTOR PROTECTION

PGR-6100 (GFR-4000) Motor Ground-Fault and Insulation Relay

Features/Benefits

- Online monitoring to detect ground faults
- Offline monitoring of insulation resistance
- Continuously monitors for predictive protective capabilities
- CT loop monitoring
- Individual alarm contacts (form C)
- Individual analog outputs to indicate insulation resistance and ground-fault current

Specifications

IEEE Device Numbers	50G/N, 51G/N, 64, 74
Dimensions	**H** 75 mm (3.0”) **W** 99.7 mm (3.9”) **D** 110 mm (4.3”)
Communications	2 Analog Outputs
Warranty	5 years

Web Resources

www.littelfuse.com/pgr-6100

ORDERING NUMBER	SPECIFICATIONS	ACCESSORIES
PGR-6100-120	24 Vdc/120 Vac Control Power	PGC-5000 Series Ground-Fault Transformers PGA-0500 Analog % Current Meter PGA-0510 Analog Ohm Meter PGH Family High Tension Couplers
PGR-6100-240	240 Vac Control Power	

PGR-6130 Electronic Overload Relay

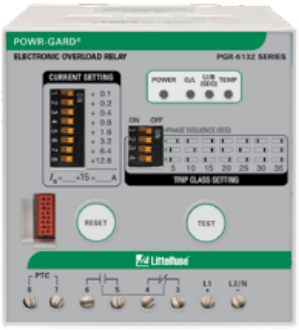

Features/Benefits

- No external CT required for currents up to 90 A
- Cause-of-trip indication
- N.O. and N.C. alarm contacts
- Adjustable overload trip class setting
- Adjustable current pickup
- Over-temperature (PTC) protection
- Thermal overload protection

Specifications

IEEE Device Numbers	46, 49, 51
Dimensions	**H** 83 mm (3.3”) **W** 78 mm (3.1”) **D** 99 mm (3.9”)
Warranty	5 years

Web Resources

www.littelfuse.com/pgr-6130

ORDERING NUMBER	SPECIFICATIONS	FULL-LOAD CURRENT	ACCESSORIES
PGR-6131-24	24 Vdc	4-16.7 A	PGB-6130 Remote Indication and Reset Assembly
PGR-6131-120	120 Vac	4-16.7 A	
PGR-6131-240	240 Vac	4-16.7 A	
PGR-6132-24	24 Vdc	15-40.5 A	
PGR-6132-120	120 Vac	15-40.5 A	
PGR-6132-240	240 Vac	15-40.5 A	
PGR-6133-24	24 Vdc	40-91 A	
PGR-6133-120	120 Vac	40-91 A	
PGR-6133-240	240 Vac	40-91 A	

PGR-6150 Motor Protection System

Features/Benefits

- 13 protective functions
- 2 relay outputs, 1 digital input
- No external CT required for currents up to 25 A
- Thermal protection through starting, running, overload and cooling cycles
- RS-485 interface with Modbus® RTU
- Optional PGR-6150-OPI Operator Interface

Specifications

IEEE Device Numbers	37, 46, 49, 50, 50G/N, 51, 51G/N, 66
Dimensions (Relay)	**H** 83 mm (3.3”) **W** 78 mm (3.1”) **D** 99 mm (3.95”)
Dimensions (OPI)	**H** 56 mm (2.2”) **W** 106 mm (4.2”) **D** 23 mm (0.9”)
Communications	RS-485 with Modbus® RTU
Warranty	5 years

Web Resources

www.littelfuse.com/pgr-6150

ORDERING NUMBER	SPECIFICATIONS	ACCESSORIES
PGR-6150-24	24/48 Vdc (Control Unit)	PGR-6150-OPI Operator Interface PGC-6000 Series Ground-Fault Transformer
PGR-6150-120	120/240 Vac/dc (Control Unit)	
PGR-6150-OPI	Operator Interface	

© 2012 Littelfuse POWR-GARD® Products Catalog

MOTOR PROTECTION

MPU-32 (PGR-6200) Motor Protection Unit

Features/Benefits

- Reduced overcurrent setting for maintenance
- Dynamic thermal modeling
- Communications for different networks
- Optional RTD protection
- Optional differential protection
- Conformal coating
- Modular system and compact design makes installation easy for new or retrofit applications

Specifications

IEEE Device Numbers	37, 38, 46, 49, 50, 50G/N, 51, 51G/N, 66, 74, 86, 87
Dimensions	**H** 96 mm (3.78") **W** 96 mm (3.78") **D** 132 mm (5.2")
Communications	RS-232 (Standard); RS-485, DeviceNet™ Ethernet (Optional)
Warranty	10 years

Web Resources

www.littelfuse.com/mpu-32

ORDERING NUMBER	COMMUNICATIONS	ACCESSORIES
MPU-32-00-00	TIA-232	Phase Current Transformers Ground-Fault Current Transformers MPS-RTD Temperature Input Module MPS-DIF Differential Current Module
MPU-32-01-00	TIA-232 & RS-485	
MPU-32-02-00	TIA-232 & DeviceNet™	
MPU-32-04-00	TIA-232 & Ethernet	

MPS (PGR-6300) Motor Protection System

Features/Benefits

- Overcurrent reduction setting for maintenance
- Monitors voltage, current, and temperature
- 22 motor protection functions
- Conformal coating
- Dynamic thermal modeling
- Starter control, Metering, and Data Logging
- Optional RTD protection with hazardous-location certified RTD module
- Optional differential protection
- Modular design makes installation easy

Specifications

IEEE Device Numbers	1, 2, 3, 5, 9, 14, 18, 19, 27, 34, 37, 38,46, 47, 48, 49, 50, 50G, 50N, 51, 51G/N, 55, 59, 66, 74, 81, 86, 87, 94
Dimensions (OPI)	**H** 98 mm (3.86") **W** 192 mm (7.56") **D** 0.42 mm (1.65")
Communications	Allen-Bradley® DF1 & Modbus® RTU (Standard); DeviceNet™, Profibus®, Ethernet (Optional)
Warranty	10 years

Web Resources

www.littelfuse.com/mps

ORDERING NUMBER	COMMUNICATIONS	ACCESSORIES
MPS-CTU-01-00	RS-485	Phase Current Transformers Ground-Fault Current Transformers MPS-RTD Temperature Input Module MPS-DIF Differential Current Module
MPS-CTU-02-00	RS-485 & DeviceNet™	
MPS-CTU-03-00	RS-485 & Profibus®	
MPS-CTU-04-00	RS-485 & Ethernet	
MPS-OPI-01-00	Operator Interface	

MPU-32-X69X (PGR-6210) & MPS-469X (PGR-6310)
Motor Protection Retrofit Kits

Features/Benefits

- Direct replacement for GE Multilin 169, 269, 369 and 469 relays
- Microprocessor-based protection
- Proven reliability
- Conformally coated circuit boards
- Pre-wired module allows minimal change-out time
- Ability to match existing overcurrent values

Ordering Information
MPS-469X

		MODULE CONFIGURATION	MPS COMMUNICATION	FUTURE OPTIONS
MPS-469X	-	X	X	000
		0 = None	1 = RS485	
		1 = One MPS-RTD Module	2 = RS485 & DeviceNet	
		2 = Two MPS-RTD Modules	3 = RS485 & Profibus	
		3 = One MPS-DIF Module	4 = RS485 & Ethernet	
		4 = One MPS-RTD Module & One MPS-DIF Module		

Ordering Information
MPU-32-X69X

		RTD INPUTS	MPU-32 COMMUNICATION	GROUND-FAULT CT	FUTURE OPTIONS
MPU-32-X69X	-	X	X	X	00
		0 = One Platinum 100 Ω	0 = TIA232	0 = Wired for wGround-Fault CT (50 mA Secondary)	
		1 = One Platinum 100 Ω & 8-input MPS-RTD Module	1 = TIA232 & TIA485	1 = Wired for 1- or 5-A Secondary Ground-Fault CT	
			2 = TIA232 & DeviceNet		
			4 = TIA232 & Ethernet		

PUMP AND FEEDER PROTECTION

PGR-6800 Pump Protection Relay

Features/Benefits

- No external CT required for currents up to 90 A
- Cause-of-trip indication
- N.O. and N.C. alarm contacts
- Adjustable overload trip class setting
- Adjustable current pickup
- Undercurrent protection

Specifications

IEEE Device Numbers 37, 46, 49, 51
Dimensions **H** 83 mm (3.3")
W 78 mm (3.1")
D 99 mm (3.9")
Warranty 5 years

Web Resources

www.littelfuse.com/pgr-6800

ORDERING NUMBER	SPECIFICATIONS	FULL-LOAD CURRENT	ACCESSORIES
PGR-6801-24	24 Vdc	7-19.6 A	PGB-6800 - Remote Indication and Reset Assembly
PGR-6801-120	120 Vac	7-19.6 A	
PGR-6801-240	240 Vac	7-19.6 A	
PGR-6802-24	24 Vdc	19-44.2 A	
PGR-6802-120	120 Vac	19-44.2 A	
PGR-6802-240	240 Vac	19-44.2 A	
PGR-6803-24	24 Vdc	40-90.4 A	
PGR-6803-120	120 Vac	40-90.4 A	
PGR-6803-240	240 Vac	40-90.4 A	

FPU-32 (PGR-7200) Feeder Protection Unit

Features/Benefits

- Protection, metering, and data-logging functions
- Programmable using the operator interface, the TIA-232 port, or an optional communications network
- IEC & IEEE protection curves
- CT saturation compensation
- Communications for different networks
- Two set-point groups

Specifications

IEEE Device Numbers 26, 46, 49, 50, 50G/N, 51, 51G/N, 74, 86
Dimensions **H** 96 mm (3.78")
W 96 mm (3.78")
D 132 mm (5.2")
Communications TIA-232, RS-485, DeviceNet™, Ethernet
Warranty 10 years

Web Resources

www.littelfuse.com/fpu-32

ORDERING NUMBER	SPECIFICATIONS	ACCESSORIES
FPU-32-00-00	TIA-232 Communications	Phase Current Transformers Ground-Fault Transformer
FPU-3200-01-00	TIA-232 & RS-485 Communications	
FPU-3200-02-00	TIA-232 & DeviceNet™ Communications	
FPU-3200-04-00	TIA-232 & Ethernet Communications	

FPS (PGR-7300) Feeder Protection System

Features/Benefits

- Monitors voltage and current
- Long-time overcurrent provides thermal protection for feeder or load
- Instantaneous overcurrent to detect catastrophic failure
- Coordinations using IEEE and IEC

Specifications

IEEE Device Numbers 27, 38, 46, 47, 49, 50, 50G/N, 51, 51G/N, 55, 59, 81,
Dimensions (OPI) **H** 98 mm (3.86")
W 192 mm (7.56")
D 0.42 mm (1.65")
Warranty 10 years

Web Resources

www.littelfuse.com/fps

ORDERING NUMBER	SPECIFICATIONS	ACCESSORIES
FPS-CTU-01-00	RS-485 Communications	Phase Current Transformers Ground-Fault Current Transformer MPS-RTD Temperature Input Module SE-IP65CVR-M Cover
FPS-CTU-02-00	RS-485 & DeviceNet™ Communications	
FPS-CTU-03-00	RS-485 & Profibus® Communications	
FPS-CTU-04-00	RS-485 & Ethernet Communications	
FPS-OPI-01-OO	Recommended	

© 2012 Littelfuse POWR-GARD® Products Catalog

ARC-FLASH PROTECTION AND GFCI

D0900 Arc-Flash Protection Relay

Features/Benefits

- Simple and cost effective solution for arc-flash monitoring
- Compact module fits into a wide range of applications
- Arc-flash trip time is less than 1 ms
- Single arc-flash relay can monitor 2 sensors

Specifications

Dimensions **H** 90 mm (3.5”) **W** 105 mm (4.1”) **D** 75 mm (3.0”)

Web Resources

www.littelfuse.com/d0900

ORDERING NUMBER	SPECIFICATIONS	ACCESSORIES
D0100.0010	48-220 Vdc	A0200 Light Sensor A0300 Light Sensor D0400/D0500 Junction Box
D0100.0020	24 Vdc	
D0900.0010	220-250 Vac	

PGR-8800 (D1000) Arc-Flash Protection Relay

Features/Benefits

- Microprocessor-based relay that limits arc-fault damage by detecting the light from and arc flash and rapidly tripping
- Sensors, inputs and connections are monitored to ensure fail-safe operation
- Arc-flash trip time is less than 1 ms
- Single module can monitor up to 6 sensors and up to 4 PGR-8800 units can be linked into one system
- Phase-CT inputs provide overcurrent protection nd prevent nuisance trips
- LED indication provides at-a-glance status for module and I/O state

Specifications

IEEE Device Numbers 50, AFD
Dimensions **H** 130 mm (5.2”) **W** 200 mm (7.9”) **D** 54 mm (2.2”)
Communications USB Interface
Warranty 5 years

Web Resources

www.littelfuse.com/afv

ORDERING NUMBER	SPECIFICATIONS	ACCESSORIES
PGR-8800-00	Multi-unit linking, USB Communication	PGA-LS10 Point Sensor PGA-LS20 Fiber-Optic Sensor Current Transformer

Industrial Shock-Block Ground-Fault Circuit Interruption

Enclosed Model

Open-Chassis Model

Features/Benefits

- First permanently connected special purpose GFCI
- Meets UL standard 943C Class C and Class D
- UL 943 inverse time trip curve reduces probability of nuisance tripping
- 3x Class T, 600 V incoming fuses provide overcurrent protection for the internal contractor

Specifications

Dimensions Enclosed
H 453 mm (17.8”)
W 406 mm (16.0”) **D** 223 mm (8.8”)
Open-chassis
H 387 mm (15.2”)
W 341 mm (13.4”) **D** 161 mm (6.4”)

Web Resources

www.littelfuse.com/industrialshockblock

ORDERING NUMBER	SPECIFICATIONS	TRIP LEVEL	ACCESSORIES
SB6100-00x-0	208 V	20 mA Fixed	SB-OPI Operator Interface 1N5339B Termination Device
SB6100-10x-0	240 V		
SB6100-20x-0	480 V		
SB6100-30x-0	600 V	20 mA Fixed	
SB6100-01x-0	208 V	6, 10, 20, 30 mA Selectable	
SB6100-11x-0	240 V		
SB6100-21x-0	480 V		
SB6100-31x-0	600 V		

Note: x=0 for open-chassis models and 1 for enclosed model

GENERATOR & SINGLE-FUNCTION PROTECTION

PGR-4300 Generator Ground-Fault Relay

Features/Benefits

- No CTs required
- Provides a simple method for tripping a ground-fault condition on generators
- Use with 3- or 4-pole transfer switches
- Monitors neutral-to-ground integrity
- Adjustable pick-up settings from 100 to 1200 A
- Adjustable time-delay settings from 0 to 1 sec

Specifications

IEEE Device Numbers	50G/N, 51G/N
Dimensions	**H** 75 mm (3.0")
	W 55 mm (2.2")
	D 115 mm (4.5")
Communications	Analog Output
Warranty	5 Year

Web Resources

www.littelfuse.com/pgr-4300

ORDERING NUMBER	SPECIFICATIONS	ACCESSORIES
PGR-4300-12	12 Vdc Control Power	PGA-0500 Analog Current Meter
PGR-4300-24	24 Vdc Control Power	
PGR-4300-120	120 Vac Control Power	

G2000 Power Relay

Features/Benefits

- Detects power level for protection, control and monitoring
- PC configuration for forward power or reverse power functionality
- User configured scales and setpoints suits a broad variety of applications
- 63 Vac to 690 Vac systems can be monitored by the same unit

Specifications

Supply	8-36 Vdc/0.75 W at 24 Vdc
Input Voltage	63-690 Vac ± 30%
Input Current	5 A CT, max. 10 A
Frequency	35-75 Hz
Dimensions	**H** 73 mm (2.9")
	W 75 mm (3.0")
	D 114 mm (4.5")

Web Resources

www.littelfuse.com/g2000

ORDERING NUMBER	SPECIFICATIONS	ACCESSORIES
G2000.0010	24 Vdc, 5 A Control Power	G0100 Programming Kit

G3000 Frequency Relay

Features/Benefits

- Frequency monitor generators, busbars or other distribution systems
- PC configuration for over and under frequency protection one unit
- User configured scales and setpoints suits a broad variety of applications
- 63 Vac to 690 Vac systems can be monitored by the same unit

Specifications

Supply	8-36 Vdc/0.75 W at 24 Vdc
Input Voltage	63-690 Vac ± 30%
Input Current	5 A CT, max. 10 A
Frequency	35-75 Hz
Dimensions	**H** 73 mm (2.9")
	W 75 mm (3.0")
	D 114 mm (4.5")

Web Resources

www.littelfuse.com/g3000

ORDERING NUMBER	SPECIFICATIONS	ACCESSORIES
G3000.0010	24 Vdc Control Power	G0100 Programming Kit

© 2012 Littelfuse POWR-GARD® Products Catalog

GENERATOR & SINGLE-FUNCTION PROTECTION

G3300 Voltage Relay

Features/Benefits

- Monitors voltage on generators, busbars or other distribution systems
- PC configuration for over and undervoltage protection in one relay
- User configured scales and setpoints suits a broad variety of applications
- Phase symmetry monitor enables use in grid connection applications
- 63 Vac to 690 Vac systems can be monitored by the same unit

Specifications

Supply	8-36 Vdc/0.75 W at 24 Vdc
Input Voltage	63-690 Vac ± 30%
Frequency	35-75 Hz
Dimensions	**H** 73 mm (2.9")
	W 75 mm (3.0")
	D 114 mm (4.5")

Web Resources

www.littelfuse.com/g3300

ORDERING NUMBER	SPECIFICATIONS	ACCESSORIES
G3300.0010	24 Vdc Control Power	G0100 Programming Kit

T2000 Reverse Power Relay

Features/Benefits

- Protects the generator from being run as an electric motor
- Accepts high supply voltage variation to ensure correct operation in spite of voltage supply fluctuations
- Visual indication of power, pick-up and output trip provides quick and concise status information

Specifications

Trip level	2-20% I_N
Delay	2-20 sec.
Max. Voltage	660 V
Dimensions	**H** 70 mm (2.8")
	W 100 mm (3.9")
	D 115 mm (4.5")

Web Resources

www.littelfuse.com/t2000

ORDERING NUMBER	TERMINALS 1-3	TERMINALS 2-3	I_N	SUPPLY
T2000.0010	230 V		5 A	L-N
T2000.0020	450 V	400 V	5 A	L-L
T2000.0030	127 V	120 V	5 A	L-N
T2000.0040	110 V	100 V	5 A	L-L
T2000.0050	110 V	100 V	5 A	L-L
T2000.0060	230 V		1 A	L-N
T2000.0070	660 V		5 A	L-L
T2000.0080	450 V	400 V	5 A	L-N
T2000.0090	127 V	120 V	5 A	L-L
T2000.0100	110 V	100 V	1 A	L-L
T2000.0110	450 V	400 V	5 A	L-L
T2000.0120	480 V	415 V	5 A	L-L
T2000.0130	230 V		5 A	L-N
T2000.0140	230 V		5 A	L-L
T2000.0150	480 V	415 V	1 A	L-L
T2000.0160	450 V	400 V	1 A	L-L

T2100 Excitation Loss Relay

Features/Benefits

- Protects against loss of excitation in a synchronous generator
- Accepts high supply voltage variation to ensure correct operation in spite of voltage supply fluctuations
- Visual indication of power, pick-up and output trip provides quick and concise status information

Specifications

Trip level	0.5-1.5 x I_N
Delay	2-20 sec.
Max. Voltage	660 V
Dimensions	**H** 70 mm (2.8")
	W 100 mm (3.9")
	D 115 mm (4.5")

Web Resources

www.littelfuse.com/t2100

ORDERING NUMBER	TERMINALS 1-3	TERMINALS 2-3	I_N	SUPPLY
T2100.0010	230 V		5 A	L-N
T2100.0020	480 V	415 V	5 A	L-L
T2100.0030	450 V	400 V	5 A	L-L
T2100.0040	110 V	100 V	1 A	L-L
T2100.0050	110 V	100 V	5 A	L-L
T2100.0060	110 V	100 V	5 A	L-L
T2100.0070	480 V	415 V	5 A	L-L
T2100.0080	110 V	100 V	5 A	L-L

GENERATOR & SINGLE-FUNCTION PROTECTION

T2200 3-Phase Overcurrent Relay

Features/Benefits

- Designed for generator or feeder protection against overcurrent in each of the 3 phases
- Accepts high supply voltage variation to ensure correct operation in spite of voltage supply fluctuations
- Visual indication of power, pick-up and output trip provides quick and concise status information

Specifications

Trip level 0.5-1.4 x I_N
Delay 3-30 sec.
Max. Voltage 660 V
Dimensions **H** 70 mm (2.8")
W 100 mm (3.9")
D 115 mm (4.5")

Web Resources

www.littelfuse.com/t2200

ORDERING NUMBER	TERMINALS 1-3	TERMINALS 2-3	I_N	FUNCTION
T2200.0010	450 V	400 V	5 A	Latching output, resetable
T2200.0020	450 V	400 V	5 A	Normally energized output, latching, resetable
T2200.0030	230 V		5 A	Latching output, resetable
T2200.0040	230 V	110 V	5 A	Latching output, resetable
T2200.0050	230 V		1 A	Latching output, resetable
T2200.0060	450 V	400 V	5 A	Normally energized output, latching, resetable
T2200.0070	110 V	100 V	5 A	Latching output, resetable
T2200.0080	480 V	415 V	5 A	Latching output, resetable
T2200.0090	24 Vdc		5 A	Latching output, resetable
T2200.0100	450 V	400 V	5 A	Instantly extra output relay
T2200.0110	450 V	400 V	1 A	Instantly extra output relay

T2300 3-Phase Short-Circuit Relay

Features/Benefits

- Designed for protection of generators, power transmissions and consumer's supply against short circuit
- Accepts high supply voltage variation to ensure correct operation in spite of voltage supply fluctuations
- Visual indication of power, pick-up and output trip provides quick and concise status information

Specifications

Trip level 1.0-4.0 x I_N
Delay 0.1-1.0 sec.
Max. Voltage 660 V
Dimensions **H** 70 mm (2.8")
W 100 mm (3.9")
D 115 mm (4.5")

Web Resources

www.littelfuse.com/t2300

ORDERING NUMBER	TERMINALS 1-3	TERMINALS 2-3	I_N	FUNCTION
T2300.0100	230 V		5 A	
T2300.0020	450 V	400 V	5 A	
T2300.0030	24 Vdc		5 A	
T2300.0040	24 Vdc		1 A	
T2300.0050	450 V	400 V	5 A	Normally de-energized output
T2300.0060	480 V	415 V	5 A	
T2300.0070	230 V		1 A	

T2400 3-Phase Dual Overcurrent Relay

Features/Benefits

- Includes 2 combined overcurrent designed for protection or monitoring of generators and power transmissions
- Accepts high supply voltage variation to ensure correct operation in spite of voltage supply fluctuations
- Combining 2 relays is an economic solution for non-essential load tripping and occupying less space in the switch panel

Specifications

Trip level 0.5-1.4 x I_N
Delay 3-30 sec.
Max. Voltage 660 V
Dimensions **H** 70 mm (2.8")
W 100 mm (3.9")
D 115 mm (4.5")

Web Resources

www.littelfuse.com/t2400

ORDERING NUMBER	TERMINALS 1-3	TERMINALS 2-3	I_N	FUNCTION
T2400.0010	230 V		5 A	
T2400.0020	450 V	400 V	5 A	
T2400.0030	110 V	100 V	5 A	
T2400.0040	450 V	400 V	5 A	Latching output on relay 1, 6-60 sec. delay on relay 1
T2400.0050	480 V	415 V	5 A	
T2400.0060	450 V	400 V	1 A	
T2400.0070	450 V	400 V	5 A	Latching output on relay 1, normally energized relay 1
T2400.0080	127 V	120 V	5 A	
T2400.0090	24 Vdc		5 A	

© 2012 Littelfuse POWR-GARD® Products Catalog

GENERATOR & SINGLE-FUNCTION PROTECTION

T2500 Overcurrent and Short-Circuit Relay

CE

Features/Benefits

- The short-circuit relays protects against faults causing high currents and the overcurrent relay protects against thermal damage
- Accepts high supply voltage variation to ensure correct operation in spite of voltage supply fluctuations
- Combining 2 relays is an economic solution, occupying less space in the switch panel

Specifications

Trip level	0.5-1.4 x I_N
Delay	3-30 sec.
Max. Voltage	660 V
Dimensions	**H** 70 mm (2.8")
	W 100 mm (3.9")
	D 115 mm (4.5")

Web Resources

www.littelfuse.com/t2500

ORDERING NUMBER	TERMINALS 1-3	TERMINALS 2-3	I_N	FUNCTION
T2500.0010	450 V	400 V	5 A	Latching output, resetable
T2500.0020	230 V		5 A	Latching output, resetable
T2500.0030	480 V	415 V	5 A	Latching output, resetable
T2500.0040	450 V	400 V	1 A	Latching output, resetable
T2500.0050	24 Vdc		5 A	Latching output, resetable
T2500.0060	230 V		5 A	De-energized extra output relay
T2500.0070	450 V	400 V	5 A	De-energized extra output relay
T2500.0080	450 V	400 V	5 A	De-energized extra output relay, latching outputs
T2500.0090	480 V	415 V	5 A	De-energized extra output relay
T2500.0100	24 Vdc		1 A	De-energized extra output relay
T2500.0110	450 V	400 V	5 A	De-energized extra output relay, latching short circuit output
T2500.0120	24 Vdc		5 A	De-energized extra output relay, de-energized relay 1, no internal power backup

T2700 Power Relay

CE

Features/Benefits

- Detects power levels for protection, control or monitoring and will protect against excessive active loads
- Accepts high supply voltage variation to ensure correct operation in spite of voltage supply fluctuations
- Visual indication of power, pick-up and output trip provides quick and concise status information

Specifications

Trip level	15-150 x I_N
Delay	2-20 sec.
Max. Voltage	660 V
Dimensions	**H** 70 mm (2.8")
	W 100 mm (3.9")
	D 115 mm (4.5")

Web Resources

www.littelfuse.com/t2700

ORDERING NUMBER	TERMINALS 1-3	TERMINALS 2-3	I_N	SUPPLY	FUNCTION
T2700.00	230 V		5 A	L-N	
T2700.02	450 V	400 V	5 A	L-L	
T2700.03	230 V	400 V	5 A	L-L	
T2700.04	110 V	100 V	5 A	L-L	Normally energized output
T2700-08	127 V	120 V	5 A	L-N	

T2900 3-Phase Differential Relay

CE

Features/Benefits

- Monitors current leakage in generators and measures the differential current of each of the 3 phases
- Accepts high supply voltage variation to ensure correct operation in spite of voltage supply fluctuations
- Visual indication of power, pick-up and output trip provides quick and concise status information

Specifications

Trip level	0.04-0.4 x I_N
Delay	1-10 sec.
	(0.1-1 sec. bridging terminals 18/19)
Max. Voltage	660 V
Dimensions	**H** 70 mm (2.8")
	W 100 mm (3.9")
	D 115 mm (4.5")

Web Resources

www.littelfuse.com/t2900

ORDERING NUMBER	TERMINALS 1-3	TERMINALS 2-3	I_N
T2900.0010	450 V	400 V	5 A
T2900.0020	230 V		5 A
T2900.0030	480 V	415 V	5 A
T2900.0040	110 V	100 V	5 A

GENERATOR & SINGLE-FUNCTION PROTECTION

T3000 Frequency Relay

Features/Benefits

- Frequency monitor generators, busbars or other distribution systems
- Accepts high supply voltage variation to ensure correct operation in spite of voltage supply fluctuations
- Visual indication of power, pick-up and output trip provides quick and concise status information
- Combining 2 relays is an economic solution for monitoring both underfrequency and overfrquency in the same unit

Specifications

Overfrequency Level	45-65 Hz
Delay	1-10 sec.
Underfrequency Level	45-65 Hz
Delay	1-10 sec.
Max. Voltage	660 V
Dimensions	**H** 70 mm (2.8")
	W 100 mm (3.9")
	D 115 mm (4.5")

Web Resources

www.littelfuse.com/t3000

ORDERING NUMBER	TERMINALS 1-3	TERMINALS 2-3
T3000.0010	230 V	
T3000.0020	450 V	400 V
T3000.0030	110 V	100 V
T3000.0040	480 V	415 V
T3000.0050	127 V	120 V

T3100 Voltage Relay

Features/Benefits

- Monitors voltage on generators, busbars or other distribution systems
- Signals when voltage is out of its limits
- Consists of two, one for overvoltage and one for undervoltage monitoring
- Accepts high supply voltage variation to ensure correct operation in spite of voltage supply fluctuations

Specifications

Overvoltage level	100-120%
Delay	1-10 sec.
Undervoltage Level	80-100%
Max. Voltage	660 V
Dimensions	**H** 70 mm (2.8")
	W 100 mm (3.9")
	D 115 mm (4.5")

Web Resources

www.littelfuse.com/t3100

ORDERING NUMBER	TERMINALS 1-3	TERMINALS 2-3
T3100.0010	230 V	
T3100.0020	450 V	400 V
T3100.0030	110 V	100 V
T3100.0040	480 V	415 V
T3100.0060	127 V	120 V

T3300 3-Phase Voltage Relay

Features/Benefits

- Monitors voltage on generators, busbars or other distribution systems
- Signals when voltage is out of its limits
- Consists of two, one for overvoltage and one for undervoltage monitoring
- Accepts high supply voltage variation to ensure correct operation in spite of voltage supply fluctuations

Specifications

Overvoltage Level	100-120%
Delay	1-10 sec.
Undervoltage Level	80-100%
Max. Voltage	660 V
Dimensions	**H** 70 mm (2.8")
	W 150 mm (5.9")
	D 115 mm (4.5")

Web Resources

www.littelfuse.com/t3300

ORDERING NUMBER	TERMINALS 17-19, 21-23, 25-27	TERMINALS 18-19, 22-23, 26-27
T3300.0010	230 V	
T3300.0020	450 V	400 V
T3300.0030	110 V	100 V
T3300.0040	480 V	415 V

© 2012 Littelfuse POWR-GARD® Products Catalog

GENERATOR CONTROL

T2600 Dual-Current Relay

Features/Benefits

- Start or stop the standby diesel generator according to the load situation
- Accepts high supply voltage variation to ensure correct operation in spite of voltage supply fluctuations
- Visual indication of power, pick-up and output trip provides quick and concise status information

Specifications

Max. Voltage	600 V
Voltage Range	70-110%
Dimensions	**H** 70 mm (2.8")
	W 150 mm (5.9")
	D 115 mm (4.5")

Web Resources

www.littelfuse.com/t2600

ORDERING NUMBER	TERMINALS 1-3	TERMINALS 2-3	I_N	FUNCTION
T2600.0010	230 V		5 A	30 sec. or 1 sec.*
T2600.0020	450 V	400 V	5 A	30 sec. or 1 sec.*
T2600.0030	480 V	415 V	5 A	30 sec. or 1 sec.*
T2600.0040	450 V	400 V	5 A	30 sec.*, bridge 17-18 = stop current increased 34%
T2600.0050	480 V		5 A	30 sec.*, bridge 17-18 = stop current increased 34%
T2600.0060	110 V	100 V	5 A	30 sec. or 1 sec.*
T2600.0070	110 V	100 V	5 A	30 sec. or 1 sec.*, start current delay 1.0-10 secs
T2600.0080	230 V		5 A	30 sec. or 1 sec.*, normally de-energized start relay
T2600.0090				Extension Unit

T4500 Auto Synchronizer for Conventional Governors

Features/Benefits

- Provides automatic synchronization of a generator to a busbar quickly via speed controller
- Inputs for disabling internal frequency control enables synchronization to external setpoint from other busbar sections, generators or the main grid
- Visual indication of signals provides quick and concise status information

Specifications

Max. Voltage	600 V
Voltage Range	70-110%
Dimensions	**H** 70 mm (2.8")
	W 100 mm (3.9")
	D 115 mm (4.5")

Web Resources

www.littelfuse.com/t4500

ORDERING NUMBER	TERMINALS 1-3, 5-7	TERMINALS 2-3, 6-7
T4500.0010	450 V	400 V
T4500.0020	230 V	
T4500.0030	480 V	415 V
T4500.0040	110 V	63 V
T4500.0050	127 V	120 V
T4500.0060	110 V	100 V
T4500.0070	600 V	

T4800 Load Sharer for Conventional Governors

Features/Benefits

- Provides automatic load sharing and frequency control for parallel running generators
- Inputs for disabling internal frequency control enables operation where system frequency is set externally such as in grid-parallel operation
- Visual indication of signals provides quick and concise status information

Specifications

Max. Voltage	600 V
Voltage Range	70-110%
Dimensions	**H** 70 mm (2.8")
	W 150 mm (5.9")
	D 115 mm (4.5")

Web Resources

www.littelfuse.com/t4800

ORDERING NUMBER	TERMINALS 1-3	TERMINALS 2-3	I_N
T4800.0010	450 V	400 V	5 A
T4800.0020	230 V		5 A
T4800.0030	480 V	415 V	5 A
T4800.0040	110 V	100 V	1 A
T4800.0050	450 V	400 V	1 A
T4800.0060	127 V	120 V	5 A
T4800.0070	110 V	100 V	5 A

GENERATOR CONTROL

T4900 VAR Load Sharer

Features/Benefits

- Provides automatic load sharing of reactive power and voltage control for parallel running generators
- Inputs for disabling internal voltage control enables operation where system voltage is set externally such as in grid-parallel operation
- Visual indication of voltage increase/decrease provides quick and concise status information

Specifications

Max. Voltage 660 V
Voltage Range 110%
Dimensions **H** 70 mm (2.8")
W 150 mm (5.9")
D 115 mm (4.5")

Web Resources

www.littelfuse.com/t4900

ORDERING NUMBER	TERMINALS 1-3	TERMINALS 2-3	I_N	ACCESSORIES
T4900.0010	450 V	400 V	5 A	T4910-07 Potentiometer with Cable for External Power Factor Setting
T4900.0020	230 V	–	5 A	
T4900.0030	480 V	415 V	5 A	
T4900.0040	110 V	63 V	5 A	
T4900.0050	127 V	120 V	1 A	
T4900.0060	110 V	100 V	1 A	

T5000 Paralleling Relay

Features/Benefits

- Inhibits closure of circuit breaker if synchronizing parameters such as voltage, frequency and phase angle are outside limits
- Prevents generator damage and disturbance to busbar
- Visual indication of voltage and closing signal provides quick and concise status information

Specifications

Max. Voltage 600 V
Voltage Range 70-110%
Dimensions **H** 70 mm (2.8")
W 100 mm (3.9")
D 115 mm (4.5")

Web Resources

www.littelfuse.com/t5000

ORDERING NUMBER	TERMINALS 1-3	TERMINALS 2-3	FUNCTION
T5000.0010	450 V	400 V	
T5000.0020	230 V		
T5000.0030	480 V	415 V	
T5000.0040	110 V	100 V	
T5000.0050	127 V	120 V	
T5000.0060	480 V	415 V	Δϕ=9-13.5°, ΔF=0.2-0.3 Hz
T5000.0070	450 V	400 V	ΔU=15-20%, Δϕ=9-13.5°, ΔF=0.2-0.3 Hz
T5000.0080	110 V	100 V	ΔU=15-20%, Δϕ=9-13.5°, ΔF=0.2-0.3n Hz
T5000.0090	450 V	400 V	Δϕ=9-13.5°, ΔF=0.2-0.3 Hz
T5000.0100	660 V		

E7800 Motorized Potentiometer

Features/Benefits

- Interface between increase/decrease contacts and a device requiring control/adjustments by an external potentiometer
- Can be used as speed trim of an electric speed governor in generator applications
- Wire would for longer life than carbon potentiometers

Specifications

Voltage Range AC: 90-120% DC: 75-125%
Consumption AC: 2.5 VA DC: 2 W
Dimensions **H** 96 mm (3.8")
W 96 mm (3.8")
D 80 mm (3.1")

Web Resources

www.littelfuse.com/e7800

ORDERING NUMBER	VOLTAGE	RPM	POTENTIOMETER
E7800.00.xx	230 V-240 Vac	1.0 (50 Hz)	5 kΩ-1 turn
E7800.01.xx	220 V-240 Vac	2.0 (50 Hz)	5 kΩ-10 turn
E7800.02.xx	100 V-110 Vac	1.0 (50 Hz)	5 kΩ-1 turn
E7800.03.xx	24 Vac	2.0 (50 Hz)	5 kΩ-10 turn
E7800.04.xx	100 V-110 Vac	2.0 (50 Hz)	5 kΩ-10 turn
E7800.05.xx	220 V-240 Vac	2.0 (50 Hz)	5 kΩ-1 turn
E7800.09.xx	24 Vac	1.0 (50 Hz)	5 kΩ-1 turn
E7800.23.xx	24 Vdc	0.8-6 Adj.	5 kΩ-1 turn
E7800.24.xx	24 Vdc	0.8-6 Adj.	5 kΩ-10 turn
E7800.90.00	24 Vdc	0.8-6 Adj.	DC output voltage, 0-1.0 V (0-100%)

© 2012 Littelfuse POWR-GARD® Products Catalog

GENERATOR CONTROL

T7900 Electronic Potentiometer

Features/Benefits

- Used as a converter between pulse contacts and a device requiring control adjustment by a voltage or current signal
- Wide selection of output ranges including PWM which ensures possible use with a broad variety of speed governors and voltage regulators
- Independent ramp-up and ramp-down time setting provides optimum controllability

Specifications

Supply	8-36 Vdc/Vac
Consumption	Max. 120 mA at 24 Vdc
Dimensions	**H** 70 mm (2.8")
	W 100 mm (3.9")
	D 115 mm (4.5")

Web Resources

www.littelfuse.com/t7900

ORDERING NUMBER	TERMINALS 11-12	TERMINALS 1-3
T7900.0010	24 Vdc/Vac	
T7900.0030		250 Vac

M8100 Synchroscope

Features/Benefits

- Provides illuminated indication of the phase and frequency difference between voltages on two separate AC systems
- High resolutions visual indications by 38 LEDs
- Available with check synchronizer relay which enables use as manual synchronizing unit, or as auto -synchronizing back-up

Specifications

Max. Voltage	600 V
Voltage Range	70-110%
Consumption	2x3 VA max.
Dimensions	**H** 96 mm (3.8")
	W 96 mm (3.8")
	D 80 mm (3.1")

Web Resources

www.littelfuse.com/m8100

ORDERING NUMBER	TERMINALS 1-1, 5-7	TERMINALS 1-3, 6-7	FUNCTION
M8100.0010	450 V	400 V	
M8100.0020	230 V		
M8100.0030	480 V	415 V	
M8100.0040	110 V	100 V	
M8100.0050	450 V	400 V	With check synchronizer relay
M8100.0060	230 V		With check synchronizer relay
M8100.0070	480 V	415 V	With check synchronizer relay
M8100.0080	110 V	100 V	With check synchronizer relay

T8400 Blackout Limiter

Features/Benefits

- Enables fast clearing of a blackout
- Monitors up to four generators or eight generators with two units
- Independent 24 Vdc supply with wide tolerance operates regardless of system voltage failure

Specifications

Supply Voltage	24 Vdc 30%
Max. Voltage	660 Vac
Frequency Range	35-70 Hz
Dimensions	**H** 70 mm (2.7")
	W 150 mm (5.9")
	D 115 mm (4.5")

Web Resources

www.littelfuse.com/m8400

ORDERING NUMBER	TERMINALS 1-3, 8-10, 17-19, 24-26	FUNCTION
T8400.0010	400 V	1-1.5-2-2.5 sec.
T8400.0020	400 V	3-3.5-4-4.5 sec.
T8400.0030	230 V	1-1.5-2-2.5 sec.
T8400.0040	230 V	3-3.5-4-4.5 sec.
T8400.0050	415 V	1-1.5-2-2.5 sec.
T8400.0060	415 V	3-3.5-4-4.5 sec.

GENERATOR CONTROL

C6200 FlexGen Standard Generator Control

Description

FlexGen controllers are intended for paralleling of generators with each other or with the grid. One FlexGen controller is installed for each generator in the installation and handles all electrical control.
Both Basic and Advanced versions include basic functions such as auto-synchronizing, frequency control, active load sharing, dead bus monitoring and reverse power protection. In addition the FlexGen Advanced contains reactive load sharing, voltage matching, power factor control, grid-parallel operation control, and protection against excitation loss, RoCoF (df/dt), and vector shift.

Features/Benefits

- 3-phase true RMS measurement is more reliable and immune to high noise
- Analog outputs for speed and voltage control fit most electronic governors and
- 10 programmable inputs and outputs for flexible configuration on wide range of applications

Specifications

Auxiliary Supply	10 Vdc to 36 Vdc (24 Vdc-58%/+50%)
Generator Voltage	63 V-690 V
Generator Rated Frequency	50 Hz/60 Hz
C/T Secondary Current	5 A
Consumption	7 W
Ambient Temp Range	–20°C to +70°C
Dimensions	**H** 182 mm (7.2") **W** 282 mm (11.1") **D** 50 mm (2.0")

Web Resources

www.littelfuse.com/c6200

ORDERING NUMBER	MODEL NAME	ACCESSORIES
C6200.0060	FlexGen Basic	C6500 FlexGen UI User Interface Module
C6200.0100	FlexGen Advanced	

S6000 Sigma Advanced Protection Module

Description

The SIGMA Generator Control and Protection System is a range of integrated modules for protection and control of marine and land based generators. The modules are marine approved and include all relevant functions, such as protection of generators, synchronizing and active/ reactive load sharing and Power Management.

IO/P Module S6000
Input/ Output and Protection Module

The SIGMA S6000 performs all measurements on the generator side (voltages, currents, frequency), does the generator protection, includes a non-essential load trip in two steps and includes three measurement transducers.

S/LS Module S6100
Synchronizing and Load-Sharing Module

This module performs the control functions like synchronizing and active and reactive load sharing. It performs the measurements on the busbar side.

Features/Benefits

- 3-phase true RMS measurement is more reliable and immune to high noise
- Analog outputs for speed and voltage control fit most electronic governors and
- Large consumer request inputs with load feedback optimizes quantity of running generators and saves fuel

Specifications

Primary Supply	+24 Vdc (-30%/+30%) Isolated, 500 mA
Backup Supply	+24 Vdc (-30%/+30%) Isolated, 500 mA
Environmental	
Temp Range	–15°C to +70°C
Dimensions	**H** 145 mm (5.7") **W** 190 mm (7.5") **D** 64 mm (2.5")

Web Resources

www.littelfuse.com/s6000

ORDERING NUMBER	DESCRIPTION	ACCESSORIES
S6000.0010	Input/ Output and Protection Module– 5 A C/T	S6500.0010 Power Manager Module S6610.0010 User Interface Module
S6000.0020	Input/ Output and Protection Module– 1 A C/T	
S6100.0010	Synchronization and Load Sharing Module	

© 2012 Littelfuse POWR-GARD® Products Catalog

ENGINE CONTROL AND DIAGNOSIS

M2000 Engine Control

Features/Benefits

- Controls start and stop of the engine, monitors and protects the engine during start and operation, and simultaneously indicates the engine and alarm status on the front of the unit
- Eight inputs for monitoring e.g. oil pressure, coolant, temperature and engine speed
- Cable monitoring on sensor inputs for a fail safe system
- Can be combined with M0600 to build a complete control, alarm and safety system for marine engines

Specifications

Voltage Supply	12-24 Vdc±30% (8-32 Vdc)
Consumption	Max. 180 mA
Dimensions	**H** 144 mm (5.7")
	W 144 mm (5.7")
	D 35 mm (1.4")

Web Resources

www.littelfuse.com/m2000

ORDERING NUMBER	CONTROL POWER	ACCESSORIES
M2000.0130	12-24 Vdc, IP54 at front	M0600 Shutdown Unit M0500 Tacho Detector K3452 RS232 Cable

M2500 Engine Control and Monitoring Unit

Features/Benefits

- Control and monitor engines in marine applications such as auxiliary generators, emergency generators and propulsion engines
- Allows manual (local) and automatic (remote) start of the engine and will monitor all engine parameters
- Nine digital alarm/shutdown inputs for monitoring e.g. oil pressure, coolant, temperature and engine speed
- Combine with M2600 to bui ld a complete control, alarm and safety system for marine engines

Specifications

Operating Temp.	–15°C to +70°C
Humidity	95%
Dimensions	**H** 137 mm (6.2")
	W 209 mm (8.2")
	D 39 mm (1.5")

Web Resources

www.littelfuse.com/m2500

ORDERING NUMBER	CONTROL POWER	ACCESSORIES
M2500.0010	12-24 Vdc	M2600 Shutdown Unit K2502 SD Card K1025 USB A to B Cable

E5000 Handheld EngineEye Unit

Features/Benefits

- Reliable robust tool for engine diagnostics, consisting of a cylinder pressure analyzer for collection of measurements, a pressure sensor, an optional top dead center sensor and an optional crank angle sensor
- Tune and balance engine during operation
- Large display and intuitive software for easy operation

Specifications

Pressure Range	0-250 Bar
Pressure Accuracy	1%
Temperature Range	–50 to +350°C
Dimensions	**H** 150 mm (5.9")
	W 260 mm (10.2")
	D 55 mm (2.2")

Web Resources

www.littelfuse.com/e5000

ORDERING NUMBER	DESCRIPTION	ACCESSORIES
E5000.1000	EngineEye Basic (E5000.0010 + E5100.0010)	E5250 Crank Angle Band E5220 Break-Out Box
E5000.2000	EngineEye Advanced (E5000.0020 + E5100.0010 + E5200.0010)	
E5000.3000	EngineEye Professional (E5000.0030 + E5100.0010 + E5300.0010)	
E5100.0010	Pressure Sensor with 1.5 m armored cable	
E5200.0010	Inductive TDC Sensor+Junction Box+Extension Cable (10 m armored)	
E5300.0010	Crank Angle Sensor+ Crank Angle Band + Junction Box + Extension Cable	

ALARM MONITORING

M1000 Alarm Monitor

Features/Benefits

- Alarm panel with ten digital inputs that trigger a corresponding LED to flash with a common alarm and siren output
- Supports both normally open and normally closed input contacts
- Multiple units can be connected ad one system for a modular and scalable solution

Specifications

Voltage Supply	12-24 Vdc –30/+30% (8-32 Vdc) 48-110 Vdc –30/+40% (33-155 Vdc)
Siren Relay Contact	220 Vac/2 A; 30 Vdc/2 A, 30 W
Communication	RS485 Interface
Dimensions	**H** 144 mm (5.7") **W** 144 mm (5.7") **D** 35 mm (1.4")

Web Resources

www.littelfuse.com/m1000

ORDERING NUMBER	CONTROL POWER	FUNCTION
M1000.0040	48-110 Vdc	IP54 front
M1000.0080	12-24 Vdc	IP54 front
M1000.0220	12-24 Vdc	Internal siren, IP54 at front

M3000 Analog Alarm Annunciator

Features/Benefits

- 24 inputs that can be configured individually for dry contact (normally open or normally closed) inputs or analog inputs
- Programmable 10-character LCD text so each alarm is indicated clearly
- 24 inputs and 48 alarms allow for individual reference to any input and easy configuration of group and individual alarms

Specifications

Voltage Supply	24 Vdc ±30%
Consumption	Max. 400 mA
Sensor Inputs	24
Alarms	48
LEDs	24
Communication	RS485 Interface
Dimensions	**H** 144 mm (5.7") **W** 144 mm (5.7") **D** 70 mm (2.7")

Web Resources

www.littelfuse.com/m3000

ORDERING NUMBER	CONTROL POWER	ACCESSORIES
M3000.0010	24 Vdc	M1500 PT100 6-way Transmitter

M4200 Alarm Monitor

Features/Benefits

- Cost effective solution, with the possibility of monitoring eight individual sensors
- Supports both normally open and normally closed input contacts
- Programmable LED color change allows flexible adjustment according to application
- Cable monitoring on sensor inputs indicates sensor health in case a sensor is lost

Specifications

Voltage Supply	8.4-40 Vdc; 8.4-50 Vac
Consumption	Max. 180 mA
Relay Output	Max. 250 Vac/6 A
Dimensions	**H** 96 mm (3.8") **W** 96 mm (3.8") **D** 20 mm (0.8")

Web Resources

www.littelfuse.com/m4200

ORDERING NUMBER	CONTROL POWER
M4200.0010	24 Vdc

© 2012 Littelfuse POWR-GARD® Products Catalog

ALARM MONITORING

M4500, M4600 & M4700 Alarm Indicators

Features/Benefits

The M4500, M4600 and M4700 Indicator Panels are intended for status indication of any process providing on/off outputs. The panels contain 6, 8 or 20 channels.

- Clamping fittings and plug-in terminal blocks allow for easy installation
- RS485 communication available for a remote display or PLCs

Specifications

Voltage Supply 24 Vdc ±25%

Dimensions
M4500: **H** 72 mm (2.8”) **W** 72 mm (2.8”) **D** 67 mm (2.6”)
M4600: **H** 96 mm (3.8) **W** 96 mm (3.8”) **D** 67 mm (2.6”)
M4700: **H** 144 mm (5.7”) **W** 144 mm (5.7”) **D** 67 mm (2.6”)

Web Resources

www.littelfuse.com/m4500
www.littelfuse.com/m4600
www.littelfuse.com/m4700

ORDERING NUMBER	CONTROL POWER	INPUT REFERENCE	ACCESSORIES
M4500.0010	24 Vdc/Vac	+24 Vdc	
M4500.0020	48 Vdc/Vac	+48 Vdc	
M4500.0030	12 Vdc/Vac	+12 Vdc	
M4500.0040	24 Vdc/Vac	0 Vdc	
M4500.0050	48 Vdc/Vac	0 Vdc	
M4500.0060	12 Vdc/Vac	0 Vdc	M0845.0010 Front cover for M4500 with handle IP54
M4600.0010	24 Vdc/Vac	+24 Vdc	
M4600.0020	48 Vdc/Vac	+48 Vdc	
M4600.0030	12 Vdc/Vac	+12 Vdc	M0845.0020 Front cover for M4500 with key IP54
M4600.0040	110 Vdc	+110 Vdc	
M4600.0050	24 Vdc/Vac	0 Vdc	
M4600.0060	48 Vdc/Vac	0 Vdc	M0846.0010 Front cover for M4600 with handle IP54
M4600.0070	12 Vdc/Vac	0 Vdc	
M4700.0010	24 Vdc/Vac	+24 Vdc	
M4700.0020	48 Vdc/Vac	+48 Vdc	
M4700.0030	12 Vdc/Vac	+12 Vdc	M0846.0020 Front cover for M4600 with key IP54
M4700.0040	110 Vdc	+110 Vdc	
M4700.0050	24 Vdc/Vac	0 Vdc	
M4700.0060	48 Vdc/Vac	0 Vdc	M0847.0010 Front cover for M4700/ M4780 with handle IP54
M4700.0070	12 Vdc/Vac	0 Vdc	
M4700.0080	110 Vdc	0 Vdc	
M4700.0090	230 Vac	+24 Vdc	M0847.0020 Front cover for M4700/ M4780 with key IP54
M4700.0100	110 Vac	+24 Vdc	
M4700.0110	230 Vac	0 Vdc	
M4700.0120*	24 Vdc	+24 Vdc	
M4700.0120*	24 Vdc	+24 Vdc	
M4700.0130†	230 Vac	+24 Vdc	
M4780.0010‡	24 Vdc	24 Vdc	

*With common alarm relay, siren relay and built-in siren.
†Inverted reference. With common alarm relay, siren relay and built-in siren.
‡ Modbus Indicator Panel, 20 channels, 24 Vdc, common alarm relay and built in siren.

H4000 HMI Operator Panels

Features/Benefits

The HMI operator panel is a touch-screen solution for SCADA solutions, designed for applications like engine control and supervision systems, power management systems and alarm systems. They can be integrated with products such as the M2500, Engine Controller, Generator Controllers and Alarm Panels.

- Clear, high-resolution screen provides high level of details

Specifications

Dimensions
M4000: **H** 219 mm (8.6”) **W** 154 mm (6.0”) **D** 6 mm (0.2”)
M4100: **H** 301 mm (11.9”) **W** 228 mm (9.0”) **D** 6 mm (0.2”)
M4200: **H** 398 mm (15.7”) **W** 304 mm (12.0”) **D** 6 mm (0.2”)

Web Resources

www.littelfuse.com/h4000

ORDERING NUMBER	DESCRIPTION
H4000.0010	HMI Panel 6,5”
H4000.0020	HMI Panel 6,5”, sun readable
H4100.0010	HMI Panel 10,4”
H4100.0020	HMI Panel 10,4” sun readable
H4200.0010	HMI Panel 15,1”
H4200.0020	HMI Panel 15,1” sun readable
H4900.0010	Programming Software

CUSTOM PRODUCTS

Portable Power Centers

Description

Littelfuse Startco is the leading Canadian manufacturer of custom-built, portable mine power centers. Littelfuse Startco portable mine power centers are skid-mounted, metal-enclosed, and typically used in underground mines. The extremely rugged enclosure is mine-duty NEMA-12 casing, tub type, flat bottom, and typically features a dry-type power transformer, three-pole medium-voltage load interrupter switch, secondary power-distribution breakers, and application-specific controls and protection. Each Littelfuse Startco power center is HIPOT and High Voltage tested, and is fully tested and inspected before shipping.

Miner Control Console

Description

Littelfuse Startco builds very rugged and high-quality control consoles for portable mining machines. These consoles typically include Littelfuse MPU-32 or MPS Motor Protection Relays, rugged industrial automation equipment, and custom Littelfuse Startco keypads.

Custom-Built Panels

Description

Littelfuse Startco can assemble custom panels, complete with ground-fault and motor-protection relays as required.

Solid-State Soft Starters

Description

Littelfuse Startco Starters are designed for starting squirrel-cage induction motors in single or parallel operation on pumps, fans, conveyor belts, centrifuges, and other high-inertia loads. The Littelfuse Starters are an extremely rugged design that incorporates the SE-3SCR-LM Load Manager and Littelfuse motor protections.

© 2012 Littelfuse POWR-GARD® Products Catalog

PANEL MOUNT ADAPTERS • SOFTWARE • ACCESSORIES

Panel Mount Adapters

Features/Benefits

- Add communications capability to older switchgear and improve system performance
- Save cost by not calibrating older electromechanical devices
- Conformally coated circuit boards
- Additional protective functions, including reduced overcurrent and dynamic thermal model
- Minimal change-out time by using existing CTs
- PGR-6200 and PGR-6300 can use existing RTDs with an optional RTD module
- Ability to match existing overcurrent curves

Adapter Plates

RELAY TO REPLACE	PANEL MOUNT	NEW RELAY
AB BULLETIN 1406	PMA-14	MPS
FPL-GFRM	PMA-6	SE-704
FPL-GFRM	PMA-6	SE-701
GE S1 GE S1	PMA-9	MPU-32
GE S1	PMA-9	FPU-32
GE LODTRAK III	PMA-10	MPU-32
GE MULTILIN 169, 269, OR 369	PMA-13	MPS
	PMA-16	MPU-32
	PMA-16	FPU-32
GE MULTILIN 469	PMA-24	MPS
GE MULTILIN P4A	PMA-15	MPU-32
GE MULTILIN P4A	PMA-15	FPU-32
GEC/MCGG	PMA-3	SE-704
GEC/MCGG	PMA-3	SE-701
GE & WESTINGHOUSE FT-11	PMA-12	MPU-32
P&B GOLDS	Contact Factory	FPU-32
WESTINGHOUSE CO9 & CO11	Contact Factory	FPU-32

Software

Product		Software For
SE-COMM-RIS Relay Interface Software		**MPU-32 MPS FPU-32 FPS**
VMPU Virtual Motor Protection Relay		**MPU-32**
VMPS Virtual Motor Protection System		**MPS**
VFPU Virtual Feeder Protection Relay		**FPU-32**
PGW-6150 Relay Interface Software		**PGR-6150**

Product		Software For
SE-FLASH Firmware Update Utility		**MPU-32 MPS FPU-32 FPS**
SE-MON330 Relay Interface Software		**SE-330 SE-330HV SE-330AU**
MPU-32 Tutorial PGR-6200 Online Self-Training Tutorial		**MPU-32**
H4900 Programming Software		**H4000 H4100 H4200**
PGW-8800 Relay Interface Software		**PGR-8800**

Accessories

Most protective relays require an accessory for operation. Visit **www.littelfuse.com/relayscontrols** for a complete listing.

PRODUCT	
Current Transformers	
Ground Reference Modules	
High Tension Couplers	
Protection Relay Testers	
Input Modules	

PRODUCT	
Remote Indication and Meters	
Sensing Resistors	
Terminations and Adapters	
Accessories for Controls and Diagnostics	
DIN Mount Adapters	

Section Overview

System overvoltage is a growing concern in the electrical industry. Component miniaturization has resulted in increased sensitivity to many devices. The majority of these devices are unable to handle high currents that result from Electrostatic Discharge (ESD) and other voltage transients. Littelfuse® offers a broad range of overvoltage protection to safeguard against these conditions.

SUPPRESSION PRODUCTS

Table of Contents

Industrial Varistor Products 177

Surge Suppression Fuses 179

Littelfuse®
Expertise Applied | Answers Delivered

OVERVOLTAGE SUPPRESSION PRODUCTS

Varistors, Surge Fuses and Varistor Assemblies

What Are Transients?

Transients are short duration surges of electrical energy that result from the sudden release of previously stored energy. In terms of electrical and electronic circuits, this energy can be released through intentional, controlled switching action, or induced into a circuit from external sources. If the voltage magnitude of the transient is large enough, circuit component damage or malfunction of the circuit may result.

Transient Sources and Magnitude

	VOLTAGE	CURRENT	RISE-TIME	DURATION
Lightning	25 kV	20 kA	10 µs	50 ms
Switching	600 V	500 A	50 µs	500 ms
EMP	300 kV	10 A	20 ns	1 ms
ESD	15 kV	30 A	1-5 ns	100 ns

Transient Voltage Scenarios

The switching of inductive loads generates high energy transients that increase in magnitude with increasingly heavy loads. When the inductive load is switched off, the collapsing magnetic field is converted into electrical energy, which takes the form of a double exponential transient. Depending on the source, these transients can be as large as hundreds of volts and hundreds of amps with duration times of 400 milliseconds.

Typical sources of inductive transients are:

- Generators
- Motors
- Relays
- Transformers

These examples are extremely common in electrical and electronic systems. Because the sizes of the loads vary according to the application, the wave shape, duration, peak current, and peak voltage are all variables which exist in real world transients. Once these variables can be approximated, a suitable suppressor technology can be selected.

Overvoltage Applications

- Industrial, High Energy AC Products such as Solenoids, Motor Drives and Robotics
- Telecommunications Products
- UPS, AC Panels, Power Supplies, Circuit Breakers (TVSS Products)
- Portable and Automotive Electronic Equipment

Lightning Induced Transients

Transients induced by lightning are not the result of a direct strike. When a lightning strike occurs, the event creates a magnetic field which can induce transients of large magnitude in nearby electrical cables.

Technological Solutions for Transient Threats

Because of the various types of transients and applications, it is necessary to employ protection devices with different characteristics in different applications. Littelfuse offers the broadest range of circuit protection technologies.
Our overvoltage protection portfolio includes:

MOVs (Metal Oxide Varistors)

A ceramic technology that offers medium to very high energy ratings for a wide range of applications. Available in screw terminal, radial, square and axial leaded connections.

Discrete TVS Diode

This Silicon Avalanche Diode Technology is available in surface mount and axial leaded packages. It offers protection from medium to very high energy transients and can be used in wide range of applications.

OVERVOLTAGE SUPPRESSION PRODUCTS

Varistors, Surge Fuses and Varistor Assemblies

Radial Leaded MOV

SERIES NAME[1]		OPERATING AC VOLTAGE RANGE	OPERATING DC VOLTAGE RANGE	PEAK CURRENT RANGE[2] (A)	PEAK ENERGY RANGE[3]	OPERATING TEMPERATURE RANGE	MOUNT/ FORM FACTOR	DISC SIZE	AGENCY				ROHS	LEAD FREE
									UL	CSA	VDE	CECC		
TMOV®/iTMOV®		115-750	—	6000-10,000	35-480	-55 to +85°C	Radial Leaded	14, 20, 34 mm	•	•	•	•	•	•
TMOV® 25S		115-750	—	20,000	170-670			25 mm	•				•	•
UltraMOV™		130-625	170-825	1750-10,000	12.5-720			7, 10, 14, 20, 25 mm	•	•	•	•	•	•
UltraMOV™ 25S		115-750	150-970	22,000	230-890			25 mm	•	•	•	•	•	•
C-III		130-660		3500-9000	40-530			10, 14, 20 mm	•	•	•		•	•
LA		130-1000	175-1200	1200-6500	11-360			7, 10, 14, 20 mm	•	•	•	•	•	•
ZA		4-460	5.5-615	50-6500	0.1-52			5, 7, 10, 14, 20 mm	•		•	•	•	•

Industrial High Energy Terminal MOV

SERIES NAME[1]		OPERATING AC VOLTAGE RANGE	OPERATING DC VOLTAGE RANGE	PEAK CURRENT RANGE[2] (A)	PEAK ENERGY RANGE[3]	OPERATING TEMPERATURE RANGE	MOUNT/ FORM FACTOR	DISC SIZE	AGENCY		ROHS	LEAD FREE
									UL	CSA		
BA/BB		130-2800	175-3500	50,000 70,000	450-10000	-55 to +85°C	Screw / Clip Terminals	60 mm	•		•	
DA/DB		130-750	175-970	40,000	270-1050			40 mm	•		•	•
HA		130-750	175-970	25,000 40,000	200-1050		Industrial Packaged Radial Leads	32, 40 mm	•	•	•	•
TMOV34S®		115-750	—	40,000	235-1050			34 mm	•		•	•
HB34, HG34, HF34		130-750	175-970	40,000	270-1050			34 mm	•	•	•	•
DHB34		250-2800	330-3500	20,000 70,000	330-10000			34 mm			•	
CA		250-2800	330-3500	20,000 70,000	330-10000		Bare Disc	60 mm			•	

High Power TVS Diodes

Series Name[1]		Package Type	Reverse Standoff Voltage (V_R)	Peak Pulse Power Range [1] (P_{PP})	Peak Pulse Current (I_{PP} 8x20µs)	Operating Temperature	Halogen Free	RoHS Compliant
15KPA		P600	17-280	15000W	Not Applicable	-85° to +302° F (-55° to +175° C)	•	•
20KPA		P600	20.0-300	20000W			•	•
30KPA		P600	28.0-288	30000W			•	•
AK6		Radial Lead	58-430	NA	6000A	-67° to +347° F (-55° to +150° C)	•	•
AK10		Radial Lead	58-430	NA	10000A		•	•

1. Detailed information about most product series listed here can be found on www.littelfuse.com/varistor
2. Not an applicable parameter for Crowbar devices
3. Value shown in Joules

© 2012 Littelfuse POWR-GARD® Products Catalog

LVSP SURGE SUPPRESSION FUSE

600 Volt • 5-100 kA

Description

The Littelfuse® Varistor Protection (LVSP) Fuses are intended for the protection of TVSS products. The LVSP series has been designed to survive the 8 x 20 µs lightning surges described in various standards (UL 1449, IEC 61000-4-5 and IEEE C62.41) without opening. This allows the TVSS to perform the necessary suppression. The LVSP is not rated for continuous current and the ratings are specific 8 x 20 µs surge capability. The LVSP series can be used to facilitate TVSS module compliance to UL 1449 in permanently connected applications (abnormal overvoltage, unlimited current conditions).

Dimensions Inches (mm)

Figure 1: Cartridge 5-20 A

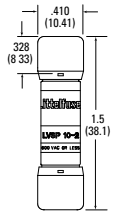

Figure 2: Cartridge 30-80 A

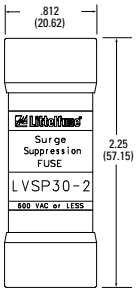

Figure 3: Leaded 5-20 A

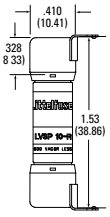

Figure 4: Bolt-In 30-80 A

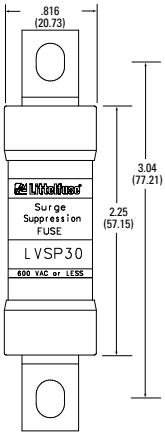

Figure 5: Bolt-In 100 A

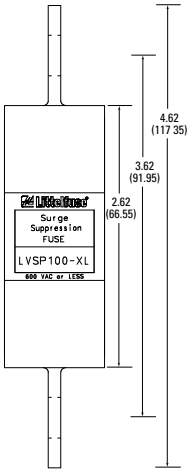

Features/Benefits

- Very current limiting under AC short-circuit conditions
- Available in multiple mounting configurations (cartridge, bolt-in, PC board mount)
- Provides short circuit protection in TVSS systems and complements the Littelfuse line of overvoltage products (HA, HB34, TMOV® and iTMOV® varistors as well as the AK-10 series TVS diodes)

Applications

- TVSS products
- Surge arrestors

CATALOG NUMBER	ORDERING NUMBER	8 X 20 µS SURGE RATING	NOMINAL MELTING I²T (A²S)	NOMINAL CLEARING I²T (A²S)	Ipeak@100 kA 60 HZ (A)
LVSP5	LVSP005T	5,000	359	981	3,700
LVSP10	LVSP0010T	10,000	1,300	3,210	5,823
LVSP15	LVSP0015T	15,000	3,267	6,235	7,765
LVSP20	LVSP0020T	20,000	4,940	11,710	8,135
LVSP30	LVSP0030T	30,000	11,950	35,325	12,478
LVSP40	LVSP0040T	40,000	20,550	61,700	15,250
LVSP60	LVSP0060T	60,000	39,240	145,555	19,604
LVSP80	LVSP0080T	80,000	75,000	254,000	24,600
LVSP100	LVSP0100T	100,000	Contact Factory		

Specifications

Voltage Rating	600 VAC
Interrupting Rating	200 kA
Ratings	5 – 100 kA 8 x 20 µs surge withstand
Approvals	UL Recognized (File No. E71611)

Recommended Fuse Blocks

LVSP (5-20)-2

L60030M (open block) 99
LPSM (dead front) 108

LVSP (30-80)-2

LFJ60030 (open block) 83
LPSJ30 (dead front) 113

LVSP (100)

LFJ60100 (open block) 83

Mounting Options

SURGE RATING	CATALOG/ORDERING NUMBER					
	CARTRIDGE		LEADED		BOLT-IN	
5	LVSP52	LVSP0005TX2	LVSP5R	LVSP0005TXR	–	–
10	LVSP102	LVSP0010TX2	LVSP10R	LVSP0010TXR	–	–
15	LVSP152	LVSP0015TX2	LVSP15R	LVSP0015TXR	–	–
20	LVSP202	LVSP0020TX2	LVSP20R	LVSP0020TXR	–	–
30	LVSP302	LVSP0030TX2	–	–	LVSP30	LVSP0030T
40	LVSP402	LVSP0040TX2	–	–	LVSP40	LVSP0040T
60	LVSP60-2	LVSP0060TX2	–	–	LVSP60	LVSP0060T
80	LVSP802	LVSP0080TX2	–	–	LVSP80	LVSP0080T
100	–	–	–	–	LVSP100-L	LVSP0100VXL

Note: Contact factory for dimensions and availability of specific mounting configurations.

For additional information, visit **www.littelfuse.com/lvsp**

Section Overview

With over 25 locations around the globe, Littelfuse® is the supplier of choice when it comes to international fuses, fuse holders and accessories. With an ever expanding portfolio of products and global resources, we provide comprehensive solutions for each customer's unique application no matter where they are located around the world.

INTERNATIONAL PRODUCTS

Table of Contents

NH Fuse Links 181

Cylindrical Fuses 183

International Products

Look for latest international products. Visits us online at:

www.littelfuse.com

Littelfuse®
Expertise Applied | Answers Delivered

NH FUSE LINKS

500 Volts • 2-630 A

Description

Littelfuse® European style NH fuse links are designed for the protection of conductors and motors. The gL-gG characteristic fuse links are generally used to protect cables and installation lines from overloads and short-circuits. The aM characteristic fuse links are used for the short-circuit protection of motors and switchgear. They are available in NH00C to NH3 sizes up to 630 A.

Specifications

Voltage Rating	500 VAC 440 VDC
Ampere Range	2-630 A
Interrupting Rating	120 kA AC 25 kA DC
Standards	DIN 43.620, IEC 269-2-1
Approvals	VDE
Example part number	NH1CG25 (size, characteristic and amperage)
Indication	All NH fuse links incorporate a blown fuse indicator

Recommended Fuse Holders

NH Fuse Base 182
NH Fuse Disconnects 182

Web Resources

For the latest international fuse products, visit:
www.littelfuse.com/nh

Ordering Information

AMPERAGE	gL-gG 500 V ORDERING NUMBER					aM 500 V ORDERING NUMBER			
	NH00C / NH00	NH0	NH1C / NH1	NH2C / NH2	NH3C / NH3	NH00CM	NH1	NH2	NH3
2	NH00CG2	—	—	—	—	NH00CM2	—	—	—
4	NH00CG4	—	—	—	—	NH00CM4	—	—	—
6	NH00CG6	NH0G6	—	—	—	NH00CM6	—	—	—
10	NH00CG10	NH0G10	—	—	—	NH00CM10	—	—	—
16	NH00CG16	NH0G16	—	—	—	NH00CM16	—	—	—
20	NH00CG20	NH0G20	—	—	—	NH00CM20	—	—	—
25	NH00CG25	NH0G25	NH1CG25	—	—	NH00CM25	—	—	—
32	NH00CG32	NH0G32	NH1CG32	—	—	NH00CM32	—	—	—
35	NH00CG35	NH0G35	NH1CG35	—	—	NH00CM35	—	—	—
40	NH00CG40	NH0G40	NH1CG40	NH2CG40	—	NH00CM40	—	—	—
50	NH00CG50	NH0G50	NH1CG50	NH2CG50	—	NH00CM50	—	—	—
63	NH00CG63	NH0G63	NH1CG63	NH2CG63	—	NH00CM63	NH1M63	—	—
80	NH00CG80	NH0G80	NH1CG80	NH2CG80	—	NH00CM80	NH1M80	—	—
100	NH00CG100	NH0G100	NH1CG100	NH2CG100	—	NH00CM100	NH1M100	—	—
125	NH00G125	NH0G125	NH1CG125	NH2CG125	—	—	NH1M125	NH2M125	—
160	NH00G160	NH0G160	NH1CG160	NH2CG160	—	—	NH1M160	NH2M160	—
200	—	—	NH1G200	NH2CG200	—	—	NH1M200	NH2M200	—
224	—	—	NH1G224	NH2CG224	—	—	NH1M224	NH2M224	—
250	—	—	NH1G250	NH2CG250	—	—	NH1M250	NH2M250	—
300	—	—	—	NH2G300	—	—	—	NH2M300	—
315	—	—	—	NH2G315	NH3CG315	—	—	NH2M315	NH3M315
355	—	—	—	NH2G355	NH3CG355	—	—	NH2M355	NH3M355
400	—	—	—	NH2G400	NH3CG400	—	—	NH2M400	NH3M400
425	—	—	—	—	NH3G425	—	—	—	—
500	—	—	—	—	NH3G500	—	—	—	NH3M500
630	—	—	—	—	NH3G630	—	—	—	NH3M630

NH FUSE LINKS DIMENSIONS, BASES, AND DISCONNECTS

Dimensions

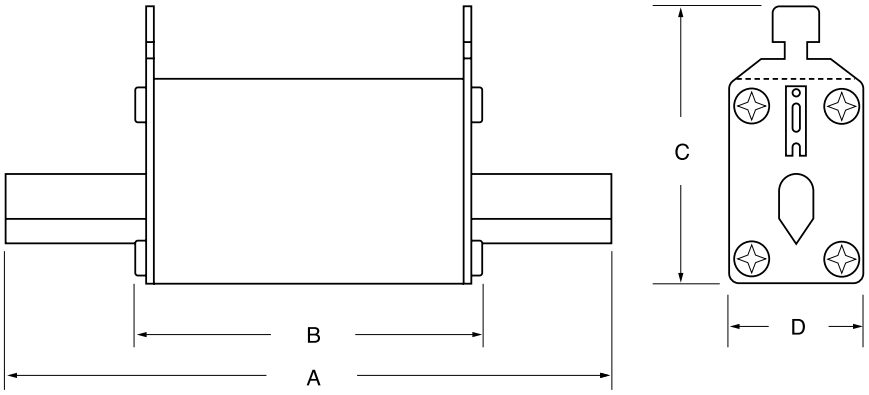

SIZE	CURRENT RANGE	VOLTAGE (AC/DC)	INTERRUPTING RATING (AC/DC)	NOMINAL FREQUENCY	SELECTIVITY	DIMENSIONS (mm)			
						A	B	C	D
00C	2-100 A	500 V/440 V	120 kA/25 kA	45 - 62 HZ	1:1 25	78.00	54.00	51.30	20.00
00	125-160 A	500 V/440 V	120 kA/25 kA	45 - 62 HZ	1:1 25	78.00	54.00	56.40	30.00
0	6-160 A	500 V/440 V	120 kA/25 kA	45 - 62 HZ	1:1 25	123.95	70.11	53.34	30.00
1C	25-160 A	500 V/440 V	120 kA/25 kA	45 - 62 HZ	1:1 25	135.00	72.00	56.40	30.00
1	63-250 A	500 V/440 V	120 kA/25 kA	45 - 62 HZ	1:1 25	135.00	72.00	65.00	40.00
2C	40-250 A	500 V/440 V	120 kA/25 kA	45 - 62 HZ	1:1 25	150.00	72.00	61.00	40.00
2	125-400 A	500 V/440 V	120 kA/25 kA	45 - 62 HZ	1:1 25	150.00	72.00	74.20	50.00
3C	315-400 A	500 V/440 V	120 kA/25 kA	45 - 62 HZ	1:1 25	150.00	72.00	74.20	50.00
3	315-630 A	500 V/440 V	120 kA/25 kA	45 - 62 HZ	1:1 25	150.00	72.00	84.00	71.88

NH Fuse Bases and Disconnects

Fuse Bases

CATALOG NUMBER	ORDERING NUMBER	SIZE	RATING	CONNECTION
NHB00B	NHB00B	00	690 V/160 A	Bolt
NHB00C	NHB00C	00	690 V/160 A	V-Clamp
NHB1B	NHB1B	1	690 V/250 A	Bolt
NHB2B	NHB2B	2	690 V/400 A	Bolt
NHB3B	NHB3B	3	690 V/630 A	Bolt

All fuse bases are single pole and gangable.

Fuse Disconnects

CATALOG NUMBER	ORDERING NUMBER	SIZE	RATING	CONNECTION
NHFSC00B	NHFSC00B	C00	690 V/100 A	Bolt
NHFS0B	NHFS0B	0	690 V/160 A	Bolt
NHFS1B	NHFS1B	1	690 V/250 A	Bolt
NHFS2B	NHFS2B	2	690 V/400 A	Bolt
NHFS3B	NHFS3B	3	690 V/630 A	Bolt

All disconnects are 3 pole.

Contact factory for dimensional information.

Web Resources

For the latest international fuse products, visit:
www.littelfuse.com/nh

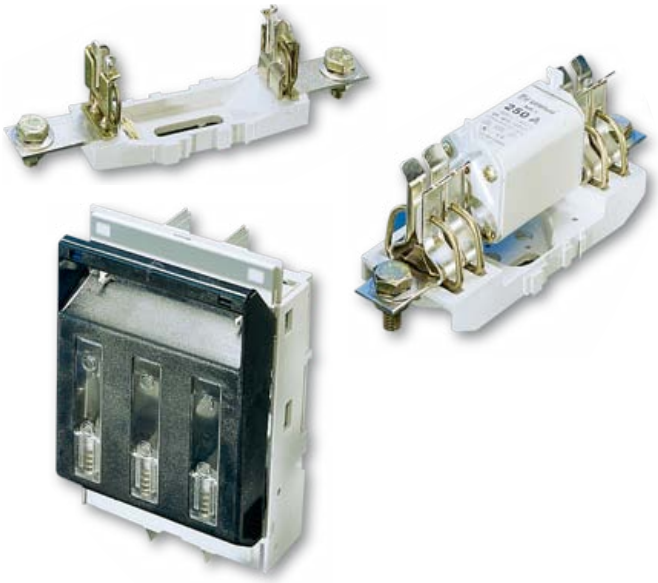

© 2012 Littelfuse POWR-GARD® Products Catalog

Littelfuse®
Expertise Applied | Answers Delivered

CYLINDRICAL FUSES

500 Volts • 0.5-100 A

IEC RoHS

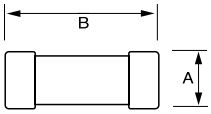

Description

Littelfuse® fast acting (gL-gG) fuses are used for the protection of cables against short-circuits. Time-lag (aM) fuses are used for protection of motors.

Specifications

Standards IEC 269-2-1

Ordering Information

BASE PART NUMBER	SIZE (mm)	CURRENT RANGE	VOLTAGE AC	INTERRUPTING RATING
CY10X38	10 X 38 mm	0.5-25 A 32 A	500 V 400 V	120 kA
CY14X51	14 X 51 mm	2-25 A 32-40 A 50 A	690 V 500 V 400 V (aM) / 500 V (gL-gG)	80 kA 120 kA 120 kA
CY22X58	22 X 58 mm	16-63 A 80-100 A	690 V 500 V	80 kA 120 kA

AMPERAGE		gL-gG ORDERING NUMBERS			aM ORDERING NUMBERS		
		10 X 38	14 X 51	22 X 58	10 X 38	14 X 51	22 X 58
0.5		CY10X38G05	—	—	CY10X38M05	—	—
1		CY10X38G1	—	—	CY10X38M1	—	—
2		CY10X38G2	CY14X51G2	—	CY10X38M2	CY14X51M2	—
4		CY10X38G4	CY14X51G4	—	CY10X38M4	CY14X51M4	—
6		CY10X38G6	CY14X51G6	—	CY10X38M6	CY14X51M6	—
8		CY10X38G8	CY14X51G8	—	CY10X38M8	CY14X51M8	—
10		CY10X38G10	CY14X51G10	—	CY10X38M10	CY14X51M10	—
12		CY10X38G12	CY14X51G12	—	CY10X38M12	CY14X51M12	—
16		CY10X38G16	CY14X51G16	CY22X58G16	CY10X38M16	CY14X51M16	CY22X58M16
20		CY10X38G20	CY14X51G20	CY22X58G20	CY10X38M20	CY14X51M20	CY22X58M20
25		CY10X38G25	CY14X51G25	CY22X58G25	CY10X38M25	CY14X51M25	CY22X58M25
32		CY10X38G32	CY14X51G32	CY22X58G32	CY10X38M32	CY14X51M32	CY22X58M32
40		—	CY14X51G40	CY22X58G40	—	CY14X51M40	CY22X58M40
50		—	CY14X51G50	CY22X58G50	—	CY14X51M50	CY22X58M50
63		—	—	CY22X58G63	—	—	CY22X58M63
80		—	—	CY22X58G80	—	—	CY22X58M80
100		—	—	CY22X58G100	—	—	CY22X58M100
DIMENSIONS (mm)	A	10	14	22	10	14	22
	B	38	51	58	38	51	58

Fuse Holders

CATALOG/ ORDERING #	SIZE	POLES	AMP RATING	VOLTAGE	TERMINAL TYPE
CYH10381	10 X 38	1	32 A	690 V	Pressure Plate
CYH10382	10 X 38	2	32 A	690 V	Pressure Plate
CYH10383	10 X 38	3	32 A	690 V	Pressure Plate
CYH10381ID*	10 X 38	1	32 A	690 V	Pressure Plate
CYH14511	14 X 51	1	50 A	690 V	Pressure Plate
CYH14512	14 X 51	2	50 A	690 V	Pressure Plate
CYH14513	14 X 51	3	50 A	690 V	Pressure Plate
CYH22581	22 X 58	1	125 A	690 V	Pressure Plate
CYH22582	22 X 58	2	125 A	690 V	Pressure Plate
CYH22583	22 X 58	3	125 A	690 V	Pressure Plate

* Indicating
NOTE: All fuse holders are DIN-Rail mountable. Contact factory for dimensional information.

Web Resources

For the latest international fuse products, visit:
www.littelfuse.com/cy

Section Overview

Miscellaneous Accessories include custom-built solutions designed specifically to meet code requirements, fuse reducers, box cover units and an assortment of useful fuse and holder accessories.

MISCELLANEOUS ACCESSORIES

Table of Contents

Fuse Reducers 185

Box Cover Units 186

Electronic Fuse Display & Spare Fuse Cabinet.....187

Littelfuse®
Expertise Applied | Answers Delivered

FUSE REDUCERS

Description

Littelfuse® fuse reducers allow smaller size fuses to be installed into existing fuse clips to prevent overfusing.

Features/Benefits

- Simple installation
- Reduces inventory requirements
- Silver brazed joints for maximum strength
- UL Listed (File No. E136855)
- CSA Certified (File No. LR92899)

Web Resources

Downloadable CAD drawings, FAQs, and other technical information visit: **www.littelfuse.com/lruh**
www.littelfuse.com/lrur
www.littelfuse.com/lruj

Refer to fuse section of this catalog for fuse dimensions.

Ordering Information

250 Volt

CATALOG/ORDERING NUMBER		FUSE CLIP	FUSE CASE SIZE
CLASS H/K5	CLASS R		
LRU 263	LRU 263 R	60 A	30 A
LRU 213	LRU 213 R	100 A	30 A
LRU 216	LRU 216 R	100 A	60 A
LRU 226	LRU 226 R	200 A	60 A
LRU 2621	LRU 2621 R	200 A	100 A
LRU 2641	LRU 2641 R	400 A	100 A
LRU 2642	LRU 2642 R	400 A	200 A
LRU 2661	LRU 2661 R	600 A	100 A
LRU 2662	LRU 2662 R	600 A	200 A
LRU 2664	LRU 2664 R*	600 A	400 A

*Only one reducer required.

600 Volt

CATALOG /ORDERING NUMBER			FUSE CLIP	FUSE CASE SIZE
CLASS H/K5	CLASS R	CLASS J		
LRU 663	LRU 663 R	LRUJ63	60 A	30 A
LRU 216	LRU 216 R	LRUJ13	100 A	30 A
LRU 616	LRU 616 R	LRUJ16¶	100 A	60 A
LRU 626	LRU 626 R	LRUJ26	200 A	60 A
LRU 2621	LRU 2621 R	LRUJ21	200 A	100 A
LRU 2641	LRU 2641 R	LRUJ41	400 A	100 A
LRU 2642	LRU 2642 R	LRUJ42	400 A	200 A
LRU 2661	LRU 2661 R	—	600 A	100 A
LRU 2662	LRU 2662 R	—	600 A	200 A
LRU 2664	LRU 2664 R†	LRUJ64	600 A	400 A

†Only one reducer required.

¶Fuse and reducer combination is slightly larger in diameter than 100 A Class J fuses. For specific applications, contact factory.
Class J reducers cannot be used in bolt-on applications.

Recommended Fuses

Class H/K5 Fuse Reducers

NLN / NLS 21
RLN / RLS 22

Class R Fuse Reducers

FLNR / FLSR 18
FLNR_ID / FLSR_ID 18
IDSR 17
LLNRK / LLSRK 14
LLSRK_ID 14
KLNR / KLSR 15

Class J Fuse Reducers

JTD_ID / JTD 23
JLS 24

BOX COVER UNITS

Description

Provide economical method of protecting small motors against overcurrent damage.

Applications

- Edison-Base plug fuses (TOO, TLO)
- Type S plug fuses (SOO, SLO) with adapters (SAO)

Specifications

Voltage Rating	125 V
Max Ampere Rating	15 A
Approvals	UL Listed parts

Web Resources

Sample requests, downloadable CAD drawings and other technical information: **www.littelfuse.com/boxcover**

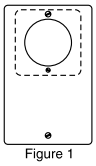
Figure 1

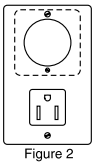
Figure 2

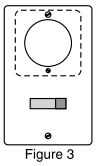
Figure 3

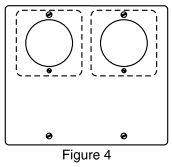
Figure 4

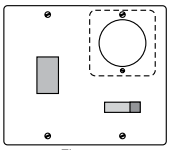
Figure 5

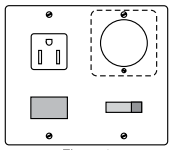
Figure 6

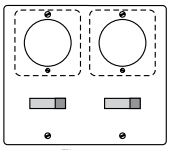
Figure 7

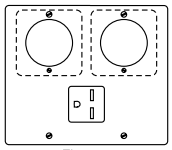
Figure 8

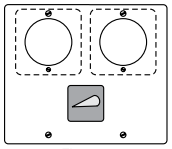
Figure 9

FIGURE NUMBER	LITTELFUSE PART NUMBER	BOX COVER FEATURES					TO BE MOUNTED ON
		EDISON BASE FUSE HOLDER	GROUNDING RECEPTACLE	SINGLE POLE SWITCH	TWO POLE SWITCH	PILOT LIGHT	
1	LSOU	1	—	—	—	—	2-1/4" Handy Box
	LSOW	1	—	—	—	—	2-3/4" Switch Box
	LSOX	1	—	—	—	—	4" Octagon Box
	LSOY	1	—	—	—	—	4" Square Box
2	LSRU*	1	1	—	—	—	2-1/4" Handy Box
	LSRW	1	1	—	—	—	2-3/4" Switch Box
	LSRX	1	1	—	—	—	4" Octagon Box
	LSRY	1	1	—	—	—	4" Square Box
3	LSSU*	1	—	1	—	—	2-1/4" Handy Box
	LSSW	1	—	1	—	—	2-3/4" Switch Box
	LSSX	1	—	1	—	—	4" Octagon Box
	LSSY*	1	—	1	—	—	4" Square Box
4	LSOY-B	2	—	—	—	—	4" Square Box
5	LSSY-L	1	—	1	—	1	4" Square Box
6	LSSY-RL	1	1	1	—	1	4" Square Box
7	LSCY	2	—	2	—	—	4" Square Box
8	LSKA	2	1 (250V)	—	—	—	4-1/16" Square Box
9	LSTY	2	—	—	1	—	4" Square Box

*UL Listed (File No. E308725)

© 2012 Littelfuse POWR-GARD® Products Catalog

FUSE DISPLAYS AND CABINETS

Electronic Fuse Display

Description

This wall-mountable or free-standing modular rack system prominently displays Littelfuse glass and automotive fuses. Additional sections can be quickly snapped on for a larger product selection. Each rack features a cross reference guide to help customers locate the proper replacement fuse.

Features/Benefits

- Holds 720 (144 5-packs) of the most popular glass, ceramic, and automotive fuses
- Designed to save space—measures 14" H × 9"W × 4" D Suitable for wall or counter mounting
- Includes cross reference, product identification guide, and back-up card for easy reordering
- Expandable with modular section that can hold 240 fuses (48 5-packs) per section

Fully stocked rack includes the following parts

3AG (GLASS) FAST ACTING FUSES		3AG (GLASS) SLO-BLO® FUSES	
QUANTITY	CATALOG NUMBER	QUANTITY	CATALOG NUMBER
25	312 ½A	25	313 ½A
50	312 1A	25	313 ¾A
25	312 1 ½A	25	313 1A
75	312 2A	25	313 1 ½A
25	312 2 ½A	50	313 2A
75	312 3A	25	313 2 ½A
25	312 4A	25	313 3A
25	312 5A	25	313 4A
25	312 10A	25	313 5A

3AB (CERAMIC) NORMAL-BLO FUSES		3AB (CERAMIC) SLO-BLO® FUSES	
QUANTITY	CATALOG NUMBER	QUANTITY	CATALOG NUMBER
25	314 15A	25	326 8A
25	314 20A	20	326 10A
25	314 30A		

Ordering Information

TYPE	CATALOG NUMBER	ORDERING NUMBER
Fully Stocked Display	094324PG	00940324ZXPG
Empty Display Rack	FDR001PG	0FDR0001ZXPG
Additional Sections	MRS001PG	0MRS0001ZXPG

Spare Fuse Cabinet

Description

- Steel cabinet with piano hinges that can be locked to prevent unauthorized access. Weather stripped to reduce the accumulation of dust, dirt and moisture
- Convenient inventory card located inside door. Measures 30" H × 24" W × 12" D. Keyhole mounting holes 16" on center for easy installation

Ordering Information

TYPE	CATALOG NUMBER	ORDERING NUMBER
Spare Fuse Cabinet	LSFC	LSFC
Spare Keys	LKEY001	LKEY0001Z

Web Resources

Sample requests and data sheets **www.littelfuse.com/lsfc**

Section Overview

This Technical Application Guide or 'Fuseology' section provides the information needed to select the correct types of Littelfuse POWR-GARD® fuses for most applications. If there are any questions or if additional data is needed for a specific use, call the Littelfuse Technical Support and Engineering Service Group at 1-800-TEC-FUSE (1-800-832-3873) or visit us online at **www.littelfuse.com**.

TECHNICAL APPLICATION GUIDE

Table of Contents

Fuseology Fundamentals 189

Selection Considerations 191

Time-current Curves and Peak Let-through Charts 195

Selective Coordination 198

UL/CSA Fuse Classes and Applications 200

Electrical Safety Guide 202

Terms and Definitions 204

Motor Protection Tables 211

Alphanumeric Index of Catalog Numbers 214

Condensed Fuse Cross Reference 216

Additional Technical Information

An expanded Technical Application Guide and Fuseology section, white papers, and a library of technical information is available online at **www.littelfuse.com/technicalcenter**

FUSEOLOGY FUNDAMENTALS

I. OVERCURRENT PROTECTION FUNDAMENTALS (FUSES AND HOW THEY WORK)

Introduction

An important part of developing quality overcurrent protection is an understanding of system needs and overcurrent protective device fundamentals. This section discusses these topics with special attention to the application of fuses. If you have additional questions, call our Technical Support Group at 1-800-TEC-FUSE (1-800-832-3873). Definitions of terms used in this section are located towards the end of this Technical Application Guide.

Why Overcurrent Protection?

All electrical systems eventually experience overcurrents. Unless removed in time, even moderate overcurrents quickly overheat system components, damaging insulation, conductors, and equipment. Large overcurrents may melt conductors and vaporize insulation. Very high currents produce magnetic forces that bend and twist bus bars. These high currents can pull cables from their terminals and crack insulators and spacers.

Too frequently, fires, explosions, poisonous fumes and panic accompany uncontrolled overcurrents. This not only damages electrical systems and equipment, but may cause injury or death to personnel nearby.

To reduce these hazards, the National Electrical Code® (NEC®), OSHA regulations, and other applicable design and installation standards require overcurrent protection that will disconnect overloaded or faulted equipment.

Industry and governmental organizations have developed performance standards for overcurrent devices and testing procedures that show compliance with the standards and with the NEC. These organizations include: the American National Standards Institute (ANSI), National Electrical Manufacturers Association (NEMA), and the National Fire Protection Association (NFPA), all of which work in conjunction with Nationally Recognized Testing Laboratories (NRTL) such as Underwriters Laboratories (UL).

Electrical systems must meet applicable code requirements including those for overcurrent protection before electric utilities are allowed to provide electric power to a facility.

What is Quality Overcurrent Protection?

A system with quality overcurrent protection has the following characteristics:

1. Meets all legal requirements, such as NEC, OSHA, local codes, etc.
2. Provides maximum safety for personnel, exceeding minimum code requirements as necessary.
3. Minimizes overcurrent damage to property, equipment, and electrical systems.
4. Provides coordinated protection. Only the protective device immediately on the line side of an overcurrent opens to protect the system and minimize unnecessary downtime.
5. Is cost effective while providing reserve interrupting capacity for future growth.
6. Consists of equipment and components not subject to obsolescence and requiring only minimum maintenance that can be performed by regular maintenance personnel using readily available tools and equipment.

Overcurrent Types and Effects

An overcurrent is any current that exceeds the ampere rating of conductors, equipment, or devices under conditions of use. The term "overcurrent" includes both overloads and short-circuits.

Overloads

An overload is an overcurrent confined to normal current paths in which there is no insulation breakdown.

Sustained overloads are commonly caused by installing excessive equipment such as additional lighting fixtures or too many motors. Sustained overloads are also caused by overloading mechanical equipment and by equipment breakdown such as failed bearings. If not disconnected within established time limits, sustained overloads eventually overheat circuit components causing thermal damage to insulation and other system components.

Overcurrent protective devices must disconnect circuits and equipment experiencing continuous or sustained overloads before overheating occurs. Even moderate insulation overheating can seriously reduce the life of the components and/or equipment involved. For example, motors overloaded by just 15% may experience less than 50% of normal insulation life.

Temporary overloads occur frequently. Common causes include temporary equipment overloads such as a machine tool taking too deep of a cut, or simply the starting of an inductive load such as a motor. Since temporary overloads are by definition harmless, overcurrent protective devices should not open or clear the circuit.

It is important to realize that fuses selected must have sufficient time-delay to allow motors to start and temporary overloads to subside. However, should the overcurrent continue, fuses must then open before system components are damaged. Littelfuse POWR-PRO® and POWR-GARD® time-delay fuses are designed to meet these types of protective needs. In general, time-delay fuses hold 500% of the rated current for a minimum of ten seconds, yet will still open quickly on higher values of current.

Even though government-mandated high-efficiency motors and NEMA Design E motors have much higher locked rotor currents, POWR-PRO® time-delay fuses such as the FLSR_ID, LLSRK_ID, or IDSR series have sufficient time-delay to permit motors to start when the fuses are properly selected in accordance with the NEC®.

Short-Circuits

A short-circuit is an overcurrent flowing outside of its normal path. Types of short-circuits are generally divided into three categories: bolted faults, arcing faults, and ground faults. Each type of short-circuit is defined in the Terms and Definitions section.

A short-circuit is caused by an insulation breakdown or faulty connection. During a circuit's normal operation, the connected load determines current. When a short-circuit occurs, the current bypasses the normal load and takes a "shorter path," hence the term 'short-circuit'. Since there is no load impedance, the only factor limiting current flow is the total distribution system's impedance from the utility's generators to the point of fault.

A typical electrical system might have a normal load impedance of 10 ohms. But in a single-phase situation, the same system might have a load impedance of 0.005 ohms or less. In order to compare the two scenarios, it is best to apply Ohm's Law (I = E/R for AC systems). A 480 volt single-phase circuit with the 10 ohm load impedance would draw 48 amperes (480/10 = 48). If the same circuit has a 0.005 ohm system impedance when the load is shorted, the available fault current would increase significantly to 96,000 amperes (480/0.005 = 96,000).

As stated, short-circuits are currents that flow outside of their normal path. Regardless of the magnitude of overcurrent, the excessive current must be removed quickly. If not removed promptly, the large currents associated with short-circuits may have three profound effects on an electrical system: heating, magnetic stress, and arcing.

Heating occurs in every part of an electrical system when current passes through the system. When overcurrents are large enough, heating is practically instantaneous. The energy in such overcurrents is measured in ampere-squared seconds (I^2t). An overcurrent of 10,000 amperes that lasts for 0.01 seconds has an I^2t of 1,000,000 A^2s. If the current could be reduced from 10,000 amperes to 1,000 amperes for the same period of time, the corresponding I^2t would be reduced to 10,000 A^2s, or just one percent of the original value.

If the current in a conductor increases 10 times, the I^2t increases 100 times. A current of only 7,500 amperes can melt a #8 AWG copper wire in 0.1 second. Within eight milliseconds (0.008 seconds or one-half cycle), a current of 6,500 amperes can raise the temperature of #12 AWG THHN thermoplastic insulated copper wire from its operating temperature of 75°C to its maximum short-circuit temperature of 150°C. Any currents larger than this may immediately vaporize organic insulations. Arcs at the point of fault or from mechanical switching such as automatic transfer switches or circuit breakers may ignite the vapors causing violent explosions and electrical flash.

Magnetic stress (or force) is a function of the peak current squared. Fault currents of 100,000 amperes can exert forces of more than 7,000 lb. per foot of bus bar. Stresses of this magnitude may damage insulation, pull conductors from terminals, and stress equipment terminals sufficiently such that significant damage occurs.

Arcing at the point of fault melts and vaporizes all of the conductors and components involved in the fault. The arcs often burn through raceways and equipment enclosures, showering the area with molten metal that quickly starts fires and/or injures any personnel in the area. Additional short-circuits are often created when vaporized material is deposited on insulators and other surfaces. Sustained arcing-faults vaporize organic insulation, and the vapors may explode or burn.

Whether the effects are heating, magnetic stress, and/or arcing, the potential damage to electrical systems can be significant as a result of short-circuits occurring.

II. SELECTION CONSIDERATIONS

Selection Considerations for Fuses (600 volts and below)

Since overcurrent protection is crucial to reliable electrical system operation and safety, overcurrent device selection and application should be carefully considered. When selecting fuses, the following parameters or considerations need to be evaluated:

- Current Rating
- Voltage Rating
- Interrupting Rating
- Type of Protection and Fuse Characteristics
- Current Limitation
- Physical Size
- Indication

Current Rating

The current rating of a fuse is the AC or DC current, expressed in amperes, which the fuse is capable of carrying continuously under specified conditions. Fuses selected for a circuit must have ampere ratings that meet NEC requirements, namely those found in NEC Articles 240 and 430. These NEC requirements establish maximum ratings and in some cases, minimum ratings. When selecting a fuse, it is generally recommended to select a current rating as close as possible to the system's normal running current.

© 2012 Littelfuse POWR-GARD® Products Catalog

SELECTION CONSIDERATIONS

Voltage Rating

The voltage rating of a fuse is the maximum AC or DC voltage at which the fuse is designed to operate. Fuse voltage ratings must equal or exceed the circuit voltage where the fuses will be installed, and fuses used in DC circuits must be specifically rated for DC applications. In terms of voltage, fuses may be rated for AC only, DC only, or both AC and DC. However, exceeding the voltage ratings or using an AC only fuse in a DC circuit could result in violent destruction of the fuse.

The standard 600 volt rated fuses discussed in this section may be applied at any voltage less than or equal to their rating. For example, a 600 volt fuse may be used in a 277 volt or even a 32 volt system, but not any system exceeding 600 volts.

NOTE: This does not apply to semiconductor fuses and medium voltage fuses. See the semiconductor and medium voltage fuse application information on www.littelfuse.com for voltage limitations of these fuses.

Interrupting Rating

The interrupting rating of a fuse is the highest available symmetrical rms alternating current that the fuse is required to safely interrupt at its rated voltage under standardized test conditions. A fuse must interrupt all overcurrents up to its interrupting rating without experiencing damage. Standard UL fuses are available with interrupting ratings of 10,000 A, 50,000 A, 100,000 A, 200,000 A, and 300,000 A.

NEC® Article 110.9 requires that all equipment intended to break current at fault levels have an interrupting rating sufficient for the system voltage and current available at the equipment's line terminals. Refer to *Figure 1*. It is vitally important to select fuses with interrupting ratings which equal or exceed the available fault current.

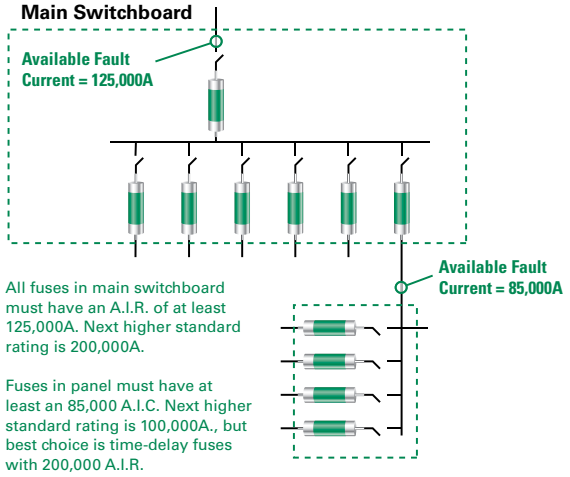

Figure 1 – Interrupting Rating Requirements per NEC

The recommendation to standardize on fuses with at least a 200,000 ampere interrupting rating (AIR) ensures that all fuses have an adequate interrupting rating while providing reserve interrupting capacity for future increases in available fault current.

300,000 AIR Fuses

Littelfuse POWR-PRO® fuse series have a Littelfuse Self-Certified interrupting rating of 300,000 amperes rms symmetrical. The 300,000 ampere testing was performed in a Nationally Recognized Testing Laboratory, and the tests were UL witnessed. UL has ruled that fuses with a UL interrupting rating greater than 200,000 amperes must be marked as "Special Purpose Fuses" and may not be labeled as UL Listed Class RK5, RK1, L, etc.

Type of Protection and Fuse Characteristics

Time current characteristics determine how fast a fuse responds to overcurrents. All fuses have inverse time characteristics; that is, the fuse opening time decreases as the magnitude of overcurrent increases. When properly rated in accordance with NEC requirements, fuses provide both overload and short-circuit protection to system conductors and components. However, in some instances such as when fuses are used to backup circuit breakers or to provide motor branch circuit short-circuit and ground fault protection, fuses provide only short-circuit protection. A fuse's response to overcurrents is divided into short-circuits and overloads.

Short-Circuits

A fuse's short-circuit response is its opening time on higher-value currents. For power fuses, higher-value currents are generally over 500-600% of the fuse's current rating. As stated earlier, all fuses have inverse time characteristics: the higher the current, the faster the opening time. Since short-circuits should be removed quickly, inverse time is especially important for short-circuit protection.

Overloads

While fuses must disconnect overloaded conductors and equipment before the conductors and components are seriously overheated, they should not disconnect harmless temporary overloads. To provide sufficient overload protection for system conductors, UL has established maximum fuse opening times at 135% and 200% of a fuse's current rating. All UL Listed fuses for application in accordance with the National Electrical Code® must meet these limits whether they are fast-acting or time-delay fuses.

As just stated, a fuse is designed to respond to two types of overcurrents – short circuits and overloads. As a result, selecting the proper fuse for a given application usually involves deciding whether to use a time-delay fuse or a fast-acting fuse. A more in-depth review of both possible scenarios is important at this time.

SELECTION CONSIDERATIONS

Fast-Acting (Normal-Opening) Fuses

Fast-acting fuses (sometimes called "Normal-opening" fuses) have no intentional time-delay. Typical opening times at 500% of the fuse ampere rating range from 0.05 second to approximately 2 seconds. Fast-Acting fuses are suitable for non-inductive loads such as incandescent lighting and general-purpose feeders, or branch circuits with little or no motor load. When protecting motors and other inductive loads, fast-acting fuses must be rated at 200-300% of load currents to prevent nuisance opening on in-rush currents. Fuses with such increased ratings no longer furnish adequate protection from overloads and only provide short-circuit protection. Overload relays or other overload protection devices must be provided to properly protect conductors and equipment from overload conditions.

All fast-acting fuses provide fast short-circuit response within their interrupting rating. Some are considered current-limiting, such as UL Class T and Class J. Others are non-current-limiting, such as UL Class H.

Time-Delay (SLO-BLO®) Fuses

Most UL Class CC, CD, G, J, L, RK5 and RK1 fuses, plus some of the UL Listed Miscellaneous fuses are considered time-delay. If so, they are identified as such on the fuse label with the words "Time-Delay", "T-D", "D", or some other suitable marking. Minimum time-delay varies with the fuse class, and to some degree with the fuse ampere rating. UL standards for POWR-GARD® fuse series FLNR, FLNR_ID, FLSR, FLSR_ID, IDSR (UL Class RK5), LLNRK, LLSRK, LLSRK_ID (UL Class RK1), and JTD, JTD_ID (UL Class J) require these fuses to carry 500% rated current for a minimum of 10 seconds. Standards for CCMR and KLDR (UL Class CC and CD) and SLC (UL Class G) fuses require them to carry 200% rated current for a minimum of 12 seconds.

Although there is no UL Classification for time-delay Class L fuses, it is still permissible for them to be marked "Time-Delay." The amount of time-delay is determined by the manufacturer. Littelfuse KLPC series and KLLU series fuses will hold 500% current for 10 seconds or more.

In addition to providing time-delay for surges and short time overloads, time-delay fuses meet all UL requirements for sustained overload protection. On higher values of current, time-delay fuses are current-limiting; meaning they remove large overcurrents in less than one-half cycle (0.00833 seconds). Time-delay fuses provide the best overall protection for both motor and general purpose circuits, and eliminate nuisance fuse opening and most situations of downtime.

Compared to fast-acting fuses, time-delay fuses can be selected with ratings much closer to a circuit's operating current. For example, on most motor circuits Class RK5 and RK1 fuses can be rated at 125-150% of a motor's full load current (FLA). This provides superior overload and short-circuit protection, and often permits the use of smaller, less expensive disconnect switches. Time-delay fuses have gradually replaced most one-time (UL Class K5) and renewable (UL Class H) fuses. Today, more than 50% of all fuses sold by electrical distributors are time-delay fuses.

Dual Element Fuses

Littelfuse time-delay FLNR, FLNR_ID, FLSR, FLSR_ID, IDSR (UL Class RK5), and LLNRK, LLSRK, LLSRK_ID (UL Class RK1), and some JTD, JTD_ID (UL Class J) series fuses have true dual-element construction meaning the fuse has an internal construction consisting of separate short-circuit and overload sections or elements. Time-delay elements are used for overload protection, and separate fast acting fuse elements or links are used to provide current-limiting short-circuit protection.

Very Fast-Acting Fuses

This category of fuses exists for limited applications. The principle use of very fast acting fuses is to protect solid-state electronic components, such as semiconductors. Fuse series designated as 'Semiconductor Fuses' have special characteristics including quick overload response, very low I^2t and I_{peak} currents, and peak transient voltages, that provide protection for components that cannot withstand line surges, low value overloads, or short-circuit currents. Very fast-acting fuses are designed for very fast response to overloads and short-circuits, and are very current-limiting.

Effect of Ambient Temperature on Fuses

The current carrying capacity of fuses is 110% of the fuse rating when installed in a standard UL test circuit and tested in open air at 25°C ambient. This allows for derating to 100% of rating in an enclosure at 40°C ambient.

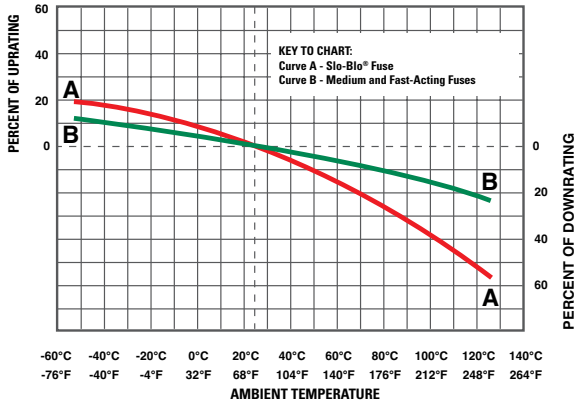

Figure 2 – Fuse Rerating Curve

© 2012 Littelfuse POWR-GARD® Products Catalog

SELECTION CONSIDERATIONS

Current Limitation

A current-limiting fuse is one that opens and clears a fault in less than 180 electrical degrees, or in other words, within the first half electrical cycle (0.00833 seconds). See the definition of Current-limiting Fuse and *Figure 13* in the Terms and Definitions section.

NEC® Article 240.2 states that a current-limiting overcurrent protective device must reduce the peak let-through current to a value substantially less than the potential peak current that would have occurred if the fuse were not used in the circuit or were replaced with solid conductors of the same impedance. The total destructive heat energy (I^2t) to the circuit and its components is greatly minimized as a result of using current-limiting fuses.

It is important to note that UL Class H 'Renewable' fuses designed decades ago are considered non-current limiting. Other than Midget fuses, almost all other fuse types used in today's electrical systems and applications are considered current-limiting per the above parameters. This selection consideration now involves determining the degree or level of current limitation required to properly protect a given device or system.

It is also important to point out that matching fuse holders and/or fuse blocks must reject non-current-limiting fuses and accept only current-limiting fuses of the stated UL Class.

Physical Size

While often overlooked, the physical size or overall dimensions of the fuse to be used in a given application is another important selection consideration to evaluate. There is a trend toward reduction of size in almost everything, and electrical equipment is no exception. Fuse size is actually determined by the size and dimensions of the fuse block or disconnect switch in which it is installed.

While saving space may be an important factor when selecting the proper fuses, other considerations should not be overlooked. Some of these include:

- Does the smallest fuse have the most desirable characteristics for the application?
- Does the equipment in which the fuse will be installed provide adequate space for maintenance?
- Do smaller fuses coordinate well with the system's other overcurrent protection?

If looking at just physical dimensions, a 600 volt, 60 ampere, 200,000 AIR, time-delay, dual-element UL Class CD fuse is smaller than a similarly rated UL Class J fuse, which is in turn, considerably smaller than a similarly rated UL Class RK1 or Class RK5 fuse. However, smaller-sized fuses can sometimes have less time-delay or more nuisance openings than their larger counterparts, so it is always important to consider all factors involved.

Indication

The newest consideration for selecting the best fuse for a given application is indication. Many of the more commonly used UL fuse classes are now available in both indicating and non-indicating versions. Built-in, blown-fuse indication that quickly identifies which fuse or fuses within an electrical panel or system have blown can be found on the Littelfuse POWR-PRO® LLSRK_ID Class RK1, FLNR_ID, FLSR_ID and IDSR Class RK5, and JTD_ID Class J fuse series.

The indicating feature on these fuses provides reduced downtime, increased safety, and reduced housekeeping or troubleshooting headaches and delays. Littelfuse Indicator® fuses will help lower the costs associated with downtime, provide longer fuse life by minimizing nuisance openings, increase system performance by minimizing equipment damage, and improve safety by minimizing accidents.

III. GENERAL FUSING RECOMMENDATIONS

Based on the above selection considerations, the following is recommended:

Fuses with ampere ratings from 1/10 through 600 amperes

- When available fault currents are less than 100,000 amperes and when equipment does not require the more current-limiting characteristics of UL Class RK1 fuses, FLNR and FLSR_ID Series Class RK5 current-limiting fuses provide superior time-delay and cycling characteristics at a lower cost than RK1 fuses. If available fault currents exceed 100,000 amperes, equipment may need the additional current-limitation capabilities of the LLNRK, LLSRK and LLSRK_ID series Class RK1 fuses.
- Fast-acting JLLN and JLLS series Class T fuses possess space-saving features that make them especially suitable for protection of molded case circuit breakers, meter banks, and similar limited-space applications.
- Time-delay JTD_ID and JTD series Class J fuses are used in OEM motor control center applications as well as other MRO motor and transformer applications requiring space-saving IEC Type 2 protection.
- Class CC and Class CD series fuses are used in control circuits and control panels where space is at a premium. The Littelfuse POWR-PRO CCMR series fuses are best used for protection of small motors, while the Littelfuse KLDR series fuses provide optimal protection for control power transformers and similar devices.

For questions about product applications, call our Technical Support Group at 800-TEC-FUSE.

Fuses with ampere ratings from 601 through 6,000 amperes

For superior protection of most general-purpose and motor circuits, it is recommended to use the POWR-PRO® KLPC series Class L fuses. The Class L fuses are the only time-delay fuse series available in these higher ampere ratings.

Information on all the Littelfuse fuse series referenced above can be found on the UL/CSA Fuse Classes and Applications Charts found later in this Technical Application Guide.

IV. SELECTION CONSIDERATIONS FOR FUSE HOLDERS

Equally important to the selection of the proper fuse is the correct selection of the proper fuse holder or fuse block for a given application. Fuse holders are available using most of the same Selection Considerations outlined above for UL fuse classes. Considerations for fuse holders include:

- Current Rating
- Voltage Rating
- Interrupting Rating
- Physical Size
- Indication

Additional selection considerations for fuse holders and fuse blocks include:

- Number of poles
- Mounting configuration
- Connector type

Number of Poles

The number of poles for each set of fuses is determined by the characteristics of the circuit. Most fuse block series are available in 1, 2, or 3 pole configurations, although some are also available with four or more poles. The option to gang individual fuse blocks into longer strips will be determined by the available space and type of wire being used.

Mounting Configuration

Depending on the fuse block design, another selection consideration to evaluate is how the fuse block is mounted or inserted into the panel. Historically, fuse blocks simply screwed into the back of the panel, but many newer designs have now added (or replaced the screw-in design with) a DIN rail mounting capability. The DIN rail mounting feature allows the blocks to be quickly installed and removed from the rails.

Connector Type

For Littelfuse fuse blocks, a choice of three connector types or wire terminations is available:

- Screw – for use with spade lugs or ring terminals.
- Screw with Pressure Plate – for use with solid or stranded wire without terminal and recommended for applications where vibration will be a factor.
- Box Lug – the most durable of the three options and used with all types of solid wire and Class B and Class C stranded wire.

There are a few additional aspects to keep in mind when selecting the fuse holder or fuse block needed for a given application. UL Class H blocks accept Class H, Class K5, and Class R fuses. Similarly, Midget-style fuse blocks accept both Midget and UL Class CC fuses.

Both UL Class R and Class CC fuse holders contain a rejection feature which prevents the insertion of a different Class or type of fuse. The physical size and dimensions of UL Class J and Class T fuses accomplish the same thing in preventing the insertion of a different Class of fuse as well.

V. CIRCUIT PROTECTION CHECKLIST

To select the proper overcurrent protective device for an electrical system, circuit and system designers should ask themselves the following questions before a system is designed:

- What is the normal or average current expected?
- What is the maximum continuous (three hours or more) current expected?
- What inrush or temporary surge currents can be expected?
- Are the overcurrent protective devices able to distinguish between expected inrush and surge currents, and open under sustained overloads and fault conditions?
- What kind of environmental extremes are possible? Dust, humidity, temperature extremes and other factors need to be considered.
- What is the maximum available fault current the protective device may have to interrupt?
- Is the overcurrent protective device rated for the system voltage?
- Will the overcurrent protective device provide the safest and most reliable protection for the specific equipment?
- Under short-circuit conditions, will the overcurrent protective device minimize the possibility of a fire or explosion?
- Does the overcurrent protective device meet all the applicable safety standards and installation requirements?

Answers to these questions and other criteria will help to determine the type overcurrent protection device to use for optimum safety, reliability and performance.

© 2012 Littelfuse POWR-GARD® Products Catalog

FUSE CHARACTERISTIC CURVES AND CHARTS

The performance capabilities of various fuses are graphically represented by two different types of fuse characteristic curves: time-current curves and peak let-through charts. These curves and charts define the operating characteristics of a given fuse, and assist system designers and engineers in selecting the proper fuse to protect equipment and electrical systems.

Understanding Time-current Curves

Time-current curves provide a graphical representation or plot of a fuse's average melting (opening) time at any current. Time-current curves for Littelfuse POWR-GARD® fuses can be found online at **www.littelfuse.com/technicalcenter**.

In order to make the curves more readable, the performance information is presented on log-log paper. The overcurrent values appear across the bottom and increase in magnitude from left to right. Average melting times appear on the left-hand side of the curve and increase in magnitude from bottom to top. The ampere ratings of the individual fuses for a given series are listed at the top and increase in rating from left to right. *Figure 4* shows the average melting time curves for a typical time-delay fuse series.

As discussed earlier in the Fuseology Fundamentals section, time-delay, fast-acting, and very fast-acting fuses all respond differently based on the overcurrents occurring in the systems each is protecting. To illustrate the basic differences between each type of fuse, *Figure 5* compares the average melting times for 100 and 600 amp ratings

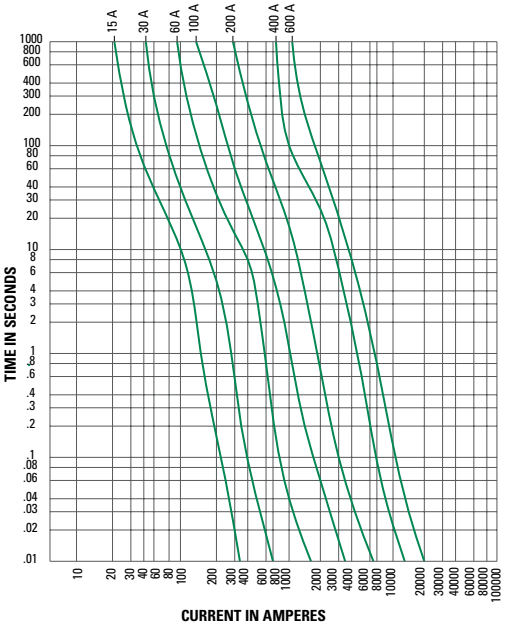

Figure 4 – Average Melting Time Curves for Typical Time-Delay Fuse Series

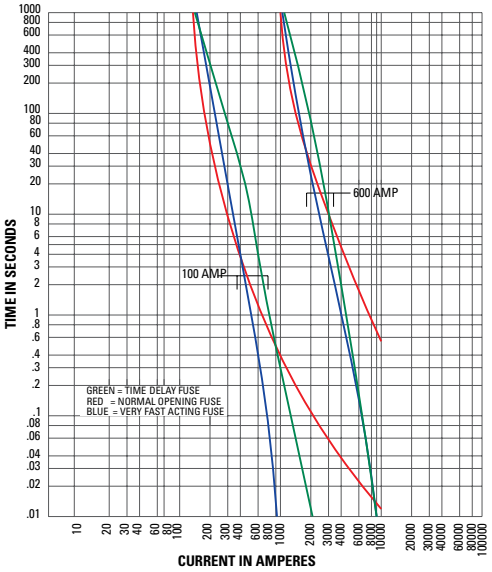

Figure 5 – Comparison of Average Melting Times for Three Fuse Types

of three fuse types: Littelfuse dual-element, time-delay LLSRK series class RK1 fuses; Littelfuse normal opening NLS series class K5 fuses; and Littelfuse very fast acting L60S series semiconductor fuses.

To better illustrate this point, *Table 3* also compares the opening times for each of these fuses.

AMPERE RATING	FUSE TYPE	OPENING TIME IN SECONDS		
		500% RATING	800% RATING	1200% RATING
100	TIME-DELAY	12 secs.	0.9 secs.	0.14 secs.
	NORMAL OPENING	2 secs.	0.7 secs.	0.3 secs.
	VERY FAST-ACTING	1.3 secs.	0.02 secs.	>0.01 secs.
600	TIME-DELAY	14 secs.	0.7 secs.	0.045 secs.
	NORMAL OPENING	10 secs.	3 secs.	1.1 secs.
	VERY FAST-ACTING	2 secs.	0.05 secs.	>0.01 secs.

Table 3 – Comparative Opening Times for Time-Delay, Fast-Acting, and Very Fast-Acting Fuses

Peak Let-through Charts

Peak let-through charts illustrate the maximum instantaneous current through the fuse during the total clearing time. This represents the current limiting ability of a fuse.

Fuses that are current-limiting open severe short-circuits within the first half-cycle (180 electrical degrees or 0.00833 seconds) after the fault occurs. Current-limiting fuses also reduce the peak current of the available fault current to a value less than would occur without the fuse. This reduction is shown in *Figure 6*.

A fuse's current-limiting effects are shown graphically on Peak Let-through charts such as the one shown in *Figure 7*. The values across the chart's bottom represent the available

FUSE CHARACTERISTIC CURVES AND CHARTS

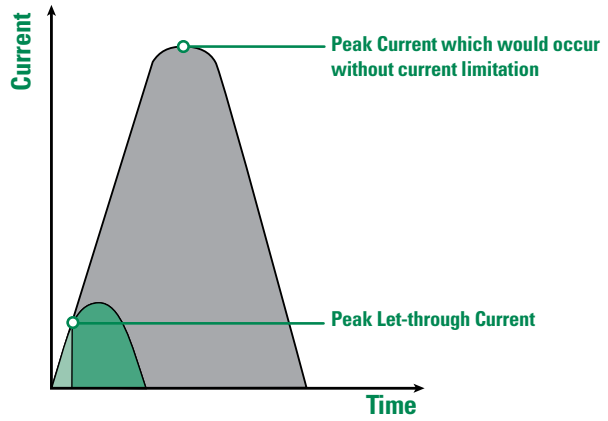

Figure 6 – Current limiting effect of fuses

(also referred to as potential or prospective) rms symmetrical fault current. The values on the chart's left side represent the instantaneous available peak current and the peak let-through current for various fuse ratings.

To better explain the function of these charts, let's run through an example. Start by entering the chart on the bottom at 100,000 rms symmetrical amperes and read upwards to the A-B line. From this point, read horizontally to the left and read the instantaneous peak let-thru current of 230,000 amperes. In a circuit with a typical 15% short-circuit power factor, the instantaneous peak of the available current is approximately 2.3 times the rms symmetrical value. This occurs since the A-B line on the chart has a 2.3:1 slope.

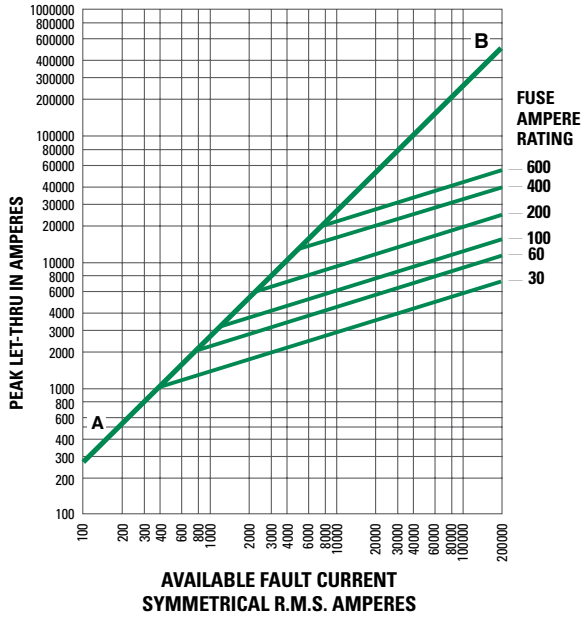

Figure 7 – Peak Let-through Charts

The diagonal curves that branch off the A-B line illustrate the current-limiting effects of different fuse ampere ratings for a given fuse series. To continue the example from above, enter the chart in *Figure 7* on the bottom at 100,000 rms symmetrical amperes and read upwards to the intersection of the 200 ampere fuse curve. Now read from this point horizontally to the left and read a peak let-through current of approximately 20,000 amperes.

What this tells us is that the 200 ampere fuse has reduced the peak current during the fault from 230,000 amperes to 20,000 amperes. In other words, this is the current-limiting effect of the 200 ampere fuse. 20,000 amperes is less than one-tenth of the available current. This is important because the magnetic force created by current flow is a function of the peak current squared. If the peak let-through current of a current-limiting fuse is one-tenth of the available peak, the magnetic force is reduced to less than 1/100 of what would occur without the fuse.

Using the Peak Let-through Charts ("Up-Over-and-Down")

Peak Let-through Charts for Littelfuse POWR-GARD® fuses can be found online at **www.littelfuse.com/technicalcenter**. These charts are useful in determining whether a given fuse can properly protect a specific piece of equipment.

For example, given an available fault-current of 100,000 rms symmetrical amperes, determine whether 600 amp 250 volt time-delay Class RK1 fuses can sufficiently protect equipment that has a 22,000 amp short-circuit rating. Refer to *Figure 8*.

Start by locating the 100,000 A available fault-current on the bottom of the chart (Point A) and follow this value upwards to the intersection with the 600 amp fuse curve (Point B). Next, follow this point horizontally to the left to intersect with the A-B line (Point C). Finally, read down to the bottom of the chart (Point D) to read a value of approximately 18,000 amps.

Can the fuse selected properly protect the equipment for this application? Yes, the POWR-PRO® LLNRK 600 ampere RK1 current-limiting fuses have reduced the 100,000 amperes available current to an apparent or equivalent 18,000 amps. When protected by 600 amp LLNRK RK1 fuses, equipment with short-circuit ratings of 22,000 amps may be safely connected to a system having 100,000 available rms symmetrical amperes.

This method, sometimes referred to as the "Up-Over-and-Down" method, may be used to:

1. Provide back-up short-circuit protection to large air power circuit breakers.
2. Enable non-interrupting equipment such as bus duct to be

© 2012 Littelfuse POWR-GARD® Products Catalog

FUSE CHARACTERISTICS CURVES AND CHARTS

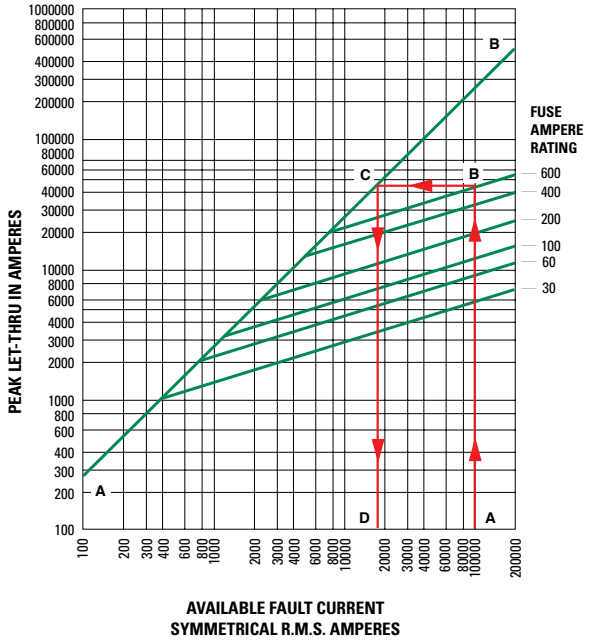

Figure 8 – Peak Let-through Chart for POWR-PRO® LLNRK Class RK1 Dual-Element Fuses Using the Up-Over-and-Down Method

installed in systems with available short-circuit currents greater than their short circuit (withstand) ratings.

However, this method may not be used to select fuses for backup protection of molded case or intermediate frame circuit breakers. National Electrical Code® (NEC®) Article 240.86 requires Series Ratings. Refer to the NEC for more information.

UL Listed fuse-to-circuit breaker series ratings are now available from most national load center and panelboard manufacturers. Listings are shown in their product digests, catalogs, and online. Many local builders have also obtained fuse-to-circuit breaker series ratings. For additional information contact the Littelfuse Technical Support Group at 1-800-TEC-FUSE (1-800-832-3873).

Short-Circuit Current Rating (SCCR)

Since 2005, the NEC has required Industrial Control Panels to be labeled with their SCCR. These labels allow users and inspectors to compare the SCCR of the equipment to the available fault current in order to avoid potential hazards in facilities. For additional information, the latest specific NEC requirements, and solutions on how to increase the SCCR for a panel, visit **www.littelfuse.com/sccr**.

Selective Coordination

A "coordinated" or "selective" system is a system whose overcurrent protective devices have been carefully chosen and their time-current characteristics coordinated.

Only the overcurrent device immediately on the line side of an overcurrent will open for any overload or short-circuit condition.

To further clarify, refer to the Terms and Definitions section for the definition of Selective Coordination and *Figure 15* for a graphical example.

Since the advent of electrical and electronic equipment, businesses have become entirely dependent on the continuous availability of electric energy. Loss of power halts all production and order processing, yet expenses continue to increase. Even many UPS systems become unintentionally non-selective causing power loss to computers and other critical equipment. Non-selectivity may defeat otherwise well-engineered UPS systems.

In a selective system, none of this occurs. Overloads and faults are disconnected by the overcurrent protective device immediately on the line side of the problem. The amount of equipment removed from service is minimized, the faulted or overloaded circuit is easier to locate, and a minimum amount of time is required to restore full service.

For these and many other reasons, selectivity is the standard by which many systems are judged and designed.

Fuse Selectivity

To get a better sense of how to ensure that fuses are selectively coordinated within an electrical system, refer to *Figure 4* shown earlier in this Technical Application Guide. This figure shows typical average melting time-current curves for one class of fuses. Note that the curves are roughly parallel to each other and that for a given overcurrent, the smaller fuse ratings respond quicker than the larger ratings. The heat energy required to open a fuse is separated into melting I^2t and arcing I^2t (see definition of Ampere-Squared-Seconds). The sum of these is the total clearing I^2t.

For a system to be considered coordinated, the smaller fuse total clearing I^2t must be less than the larger fuse melting I^2t. In other words, if the downstream (branch) fuse opens the circuit before the overcurrent affects the upstream (feeder) fuse element, the system will be considered selective. This can be determined by analyzing curves displaying melting and total clearing I^2t, or from minimum melting and maximum clearing time-current curves.

But the simplest method of coordinating low voltage power fuses is by using a Fuse Coordination Table such as the one shown in *Table 4*. This table is only applicable for the Littelfuse POWR-PRO® and POWR-GARD® fuse series listed. Tables such as this greatly reduce design time. For example, the coordination table shows that POWR-PRO KLPC Class L fuses coordinate at a two-to-one ratio with other Class L fuses, with POWR-PRO LLNRK / LLSRK / LLSRK_ID series

Class RK1 fuses, and POWR-PRO JTD / JTD_ID series Class J fuses.

In the system shown in *Figure 9*, the 3000 amp Class L main fuses are at least twice the ratings of the 1500, 1200, and 1000 amp Class L feeder fuses. Using the 2:1 ratio just referenced above, it is determined that these fuses will coordinate. The Coordination Table also shows that the LLSRK_ID series time-delay RK1 feeder and branch circuit fuses coordinate at a two-to-one ratio with the Class L feeder fuses, so the entire system in *Figure 9* would be considered 100% coordinated.

Circuit Breaker Coordination

As a result of the numerous types of circuit breakers and circuit breaker trip units available in today's market, developing a coordinated circuit breaker system or coordinating circuit breakers with fuses is beyond the scope of this Technical Application Guide. For further questions, contact the Littelfuse Technical Support Group.

NEC® Requirements for Selective Coordination

Component Short-Circuit Protecting Ability

As shown in *Figure 10*, the NEC® requires equipment protection to be coordinated with overcurrent protective devices and the available fault current in order to prevent extensive damage to the equipment. Essentially, this means that electrical equipment must be capable of withstanding heavy overcurrents without damage or be properly protected by overcurrent protective devices that will limit damage.

When a severe fault occurs in an unprotected circuit, current immediately increases to a very high value. This is the available or prospective fault current. Some fuses respond so quickly to the increasing current that they interrupt current within the first half-cycle - or before the current even reaches its first peak. This is illustrated in *Figure 6* found earlier in the Technical Application Guide. Such fuses are termed "current-limiting fuses."

Current-limiting fuses stop damaging current faster than any other protective device, and greatly reduce or totally prevent component damage from high fault currents. This performance capability helps users meet the NEC Article 110.10 requirements listed in *Figure 10*.

Pre-Engineered Solutions

Applicable code requirements also continue to expand with each new edition of the National Electrical Code®. As of the 2011 edition of the NEC, the following requirements need to be met – and can be, utilizing Littelfuse POWR-GARD® Pre-Engineered Solutions:

- NEC 517.26 – Healthcare Essential Electrical Systems
- NEC 620.62 – Elevators
- NEC 700.27 – Emergency Systems
- NEC 701.27 – Legally Required Standby Systems
- NEC 708.54 – Critical Operations Power Systems

LINE-SIDE FUSES			LOAD-SIDE FUSES								
			TIME-DELAY FUSES AMPERE RANGE, UL CLASS AND CATALOG NO.					FAST-ACTING FUSES AMPERE RANGE, UL CLASS AND CATALOG NO.			
AMPERE RANGE	UL CLASS	LITTELFUSE CATALOG NO.	601-6000	601-4000	30-600	30-600	30-600	30-600	30-1200	30-600	1-60
			L	L	RK1	J	RK5	RK1	T	J	G
			KLPC LDC	KLLU	LLNRK LLSRK_ID	JTD_ID JTD	FLNR_ID FLSR_ID IDSR	KLNR KLSR	JLLN JLLS	JLS	SLC
601-6000	L	KLPC	2:1	2:1	2:1	2:1	4:1	2:1	2:1	2:1	N/A
601-4000	L	KLLU	2:1	2:1	2:1	2:1	4:1	2:1	2:1	2:1	N/A
601-2000	L	LDC	2:1	2:1	2:1	2:1	4:1	2:1	2:1	2:1	N/A
30-600	RK1	LLNRK	N/A	N/A	2:1	2:1	8:1	3:1	3:1	3:1	4:1
30-600	RK1	LLSRK_ID	N/A	N/A	2:1	2:1	8:1	3:1	3:1	3:1	4:1
30-600	J	JTD_ID	N/A	N/A	2:1	2:1	8:1	3:1	3:1	3:1	4:1
30-600	RK5	IDSR	N/A	N/A	1.5:1	1.5:1	2:1	1.5:1	1.5:1	1.5:1	1.5:1
30-600	RK5	FLNR_ID	N/A	N/A	1.5:1	1.5:1	2:1	1.5:1	1.5:1	1.5:1	1.5:1
30-600	RK5	FLSR_ID	N/A	N/A	1.5:1	1.5:1	2:1	1.5:1	1.5:1	1.5:1	1.5:1
30-600	RK1	KLNR	N/A	N/A	3:1	3:1	8:1	3:1	3:1	3:1	4:1
30-600	RK1	KLSR	N/A	N/A	3:1	3:1	8:1	3:1	3:1	3:1	4:1
30-1200	T	JLLN	N/A	N/A	3:1	3:1	8:1	3:1	3:1	3:1	4:1
30-1200	T	JLLS	N/A	N/A	3:1	3:1	8:1	3:1	3:1	3:1	4:1
30-600	J	JLS	N/A	N/A	3:1	3:1	8:1	3:1	3:1	3:1	4:1
1-60	G	SLC	N/A	N/A	3:1	3:1	4:1	2:1	2:1	2:1	2:1

Table 4 – Fuse Coordination Table. Selecting the Correct Fuse Ampere Ratio to Maintain Selectively Coordinated Systems. (Ratios are expressed as Line-Side Fuse to Load-Side Fuse.)

© 2012 Littelfuse POWR-GARD® Products Catalog

SELECTIVE COORDINATION

The Littelfuse product line of Pre-Engineered Solutions includes:

- LPS Series POWR-Switch (single elevator shunt-trip disconnect switch)
- LPMP Series POWR-Switch Panel (multiple elevator shunt-trip disconnect switches)
- LCP Selective Coordination Panel

These products continue to gain in popularity because they meet NEC® requirements and offer simple, economical solutions for a variety of applications.

Visit **www.littelfuse.com/lcp** for more information on Littelfuse Pre-Engineered Solution products and corresponding selective coordination requirements.

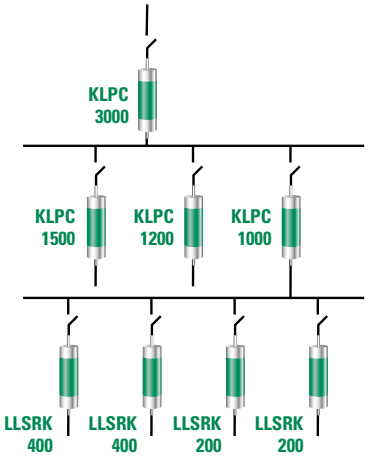

Figure 9 – Example of Selectively Coordinated Fused System

NATIONAL ELECTRICAL CODE®

ARTICLE 110 – Requirements for Electrical Installations

I. General

110.3. Examination, Identification, Installation, and Use of Equipment.

(A) Examination. In judging equipment, considerations such as the following shall be evaluated:

(5) Heating effects under normal conditions of use and also under abnormal conditions likely to arise in service.

(6) Arcing effects.

(B) Installation and Use. Listed or labeled equipment shall be used or installed in accordance with any instructions included in the listing or labeling.

110.9 Interrupting Rating. Equipment intended to interrupt current at fault levels shall have an interrupting rating not less than the nominal circuit voltage and the current that is available at the line terminals of the equipment.
Equipment intended to interrupt current at other than fault levels shall have an interrupting rating at nominal circuit voltage not less than the current that must be interrupted.

110.10 Circuit Impedance, Short-Circuit Current Ratings, and Other Characteristics. The overcurrent protective devices, the total impedance, the equipment short-circuit current ratings, and other characteristics of the circuit to be protected shall be selected and coordinated to permit the circuit protective devices used to clear a fault to do so without extensive damage to the electrical equipment of the circuit. This fault shall be assumed to be either between two or more of the circuit conductors or between any circuit conductor and the equipment grounding conductor(s) permitted in 250.118. Listed equipment applied in accordance with their listing shall be considered to meet the requirements of this section.

ARTICLE 240 – Overcurrent Protection

240.1 Scope. Parts I through VII of this article provide the general requirements for overcurrent protection and overcurrent protective devices not more than 600 volts, nominal. Part VIII covers overcurrent protection for those portions of supervised industrial installations operating at voltages of not more than 600 volts, nominal. Part IX covers overcurrent protection over 600 volts, nominal.

Informational Note: Overcurrent protection for conductors and equipment is provided to open the circuit if the current reaches a value that will cause an excessive or dangerous temperature in conductors or conductor insulation. See also Articles 110.9 for requirements for interrupting ratings and 110.10 for requirements for protection against fault currents.

(Reproduced by permission of NFPA)

Figure 10 – National Electrical Code Requires Effective Overcurrent Protection

UL/CSA FUSE CLASSES AND APPLICATIONS

Overcurrent and short-circuit protection of power and lighting feeders and branch circuits

Current Limiting

Fuses which meet the requirements for current limiting fuses are required to be labeled "Current Limiting". Fuse labels must include: UL/CSA fuse class, manufacturer's name or trademark, current rating, AC and/or DC voltage rating, and AC and/or DC interrupting rating. "Time Delay", "D", "TD" or equivalent may also be included on the label when the fuse complies with the time delay requirements of its class.

CLASS L

STANDARDS: UL Standard 248-14,
CSA Standard C22.2, No. 106, classified as HRCI-L
VOLTAGE RATING: 600 volts, AC and/or DC
CURRENT RATINGS: 601-6000 amps
KLPC also available 200-600A; LDC also available 150-600A
INTERRUPTING RATING: AC: 200,000 amps rms symmetrical
DC: 50,000, 100,000, or 200,000 amps
Not interchangeable with any other UL fuse class.
Time delay: Class L fuses may be marked "Time-Delay" although UL does not investigate time-delay characteristics of Class L fuses.
KLPC & KLLU: 10 seconds at 500% current rating
LDC: 4 seconds at 500% current rating

LF SERIES: KLPC, KLLU, LDC

PAGE: 9

CLASS R

STANDARDS: UL Standard 248-12,
CSA Standard C22.2, No. 106, classified as HRCI-R
VOLTAGE RATINGS: 250 and 600 volts, AC; 125 and 300 volts DC
CURRENT RATINGS: 0-600 amps
INTERRUPTING RATING: 200,000 amps rms symmetrical
TWO CLASSES: RK1 and RK5
Time delay is optional for Class R fuses.
Time Delay fuses are required to hold 500% current rating for a minimum of ten seconds.
Same dimensions as UL Class H fuses, terminals modified to provide rejection feature.
Fits UL Class R fuse holders which reject non Class R fuses.
Physically interchangeable with UL Class H, NEMA Class H, and UL Classes K1 & K5 when equipment has Class H fuse holders.

CLASS RK1

High degree of current limitation. Provides IEC Type 2 (no damage) protection for motor starters and control components. Time Delay optional, LLSRK_ID Series provides visual indication of blown fuse.

LF SERIES: Time Delay: LLNRK, LLSRK, LLSRK_ID
Fast Acting: KLNR, KLSR

PAGE: 14

CLASS RK5

Moderate degree of current limitation, adequate for most applications. Time delay optional. FLNR_ID, FLSR_ID and IDSR series provides visual indication of blown fuse.

LF SERIES: FLNR, FLNR_ID, FLSR, FLSR_ID, and IDSR

PAGE: 17

CLASS J

STANDARDS: UL Standard 248-8,
CSA Standard C22.2, No. 106, classified as HRCI-J
VOLTAGE RATING: 600 volts, AC
CURRENT RATINGS: 0-600 amps
INTERRUPTING RATING: 200,000 amps rms symmetrical
Not interchangeable with any other UL fuse class.
Time delay optional: Minimum of 10 seconds at 500% current rating.

LF SERIES: Time Delay: JTD_ID, JTD
Fast Acting: JLS

PAGE: 23

CLASS CC/CD

STANDARDS: UL Standard 248-4,
CSA Standard C22.2, No. 106, classified as HRCI Misc.
VOLTAGE RATING: 600 volts, AC
CURRENT RATINGS: UL Class CC: 0-30 amps
UL Class CD: 35-60 amps
INTERRUPTING RATINGS: 200,000 amps rms symmetrical
Time delay optional: Minimum of 12 seconds at 200% current rating.

LF SERIES: Time Delay: CCMR (motors), KLDR (transformers)
Fast Acting: KLKR

PAGE: 29

CLASS T

STANDARDS: UL Standard 248-15
CSA Standard C22.2, No. 106, classified as HRCI-T
VOLTAGE RATINGS: 300 and 600 volts AC, 125 and 300 volts DC
CURRENT RATINGS: 0-1200 amps
900 to 1200 amps UL Recognized for 600V version
INTERRUPTING RATING: 200,000 amps rms symmetrical
Fast-Acting fuses. High degree of current limitation.
Very small fuses; space-saving and non-interchangeable with any other UL fuse class.

LF SERIES: JLLN, JLLS

PAGE: 26

CLASS G

STANDARDS: UL Standard 248-5
CSA Standard C22.2, No. 106, classified as HRCI Misc.
VOLTAGE RATING: 480 volts, AC
CURRENT RATINGS: 0-60 amps
INTERRUPTING RATING: 100,000 amps rms symmetrical
Not interchangeable with any other UL fuse class.
Time delay optional: Minimum of 12 seconds at 200% current rating.

LF SERIES: SLC

PAGE: 28

CLASS K

STANDARDS: UL Standard 248-9; No CSA Standard
VOLTAGE RATINGS: 250 and 600 volts, AC
CURRENT RATING: 0-600 amps
INTERRUPTING RATINGS: Three permitted: 50,000, 100,000, and 200,000 amps rms symmetrical
Time delay is optional for Class K fuses.
Time Delay fuses are required to hold 500% current rating for a minimum of ten seconds.
Same Dimensions and Physically interchangeable with UL Class H fuse holders.
Class K fuses are not permitted to be labeled Current Limiting because there is no rejection feature as required by NEC Article 240-60(B).

CLASS K1

Same prescribed degree of current limitation as RK1 fuses when tested at 50,000 or 100,000 amps rms symmetrical.

LF SERIES: Time Delay: LLNRK, LLSRK
Fast Acting: KLNR, KLSR

PAGE: 14

CLASS K5

Same prescribed degree of current limitation as RK5 fuses when tested at 50,000 or 100,000 amps rms symmetrical.

LF SERIES: NLN, NLS

PAGE: 21

© 2012 Littelfuse POWR-GARD® Products Catalog

UL/CSA FUSE CLASSES AND APPLICATIONS

Overcurrent and short-circuit protection of power and lighting feeders and branch circuits

FUSES FOR SUPPLEMENTARY OVERCURRENT PROTECTION

STANDARDS: UL Standard 248-14; CSA Standard C22.2, No. 59-1. Three Classifications covered:
NOTE: Fuses may be rated for AC and/or DC when suitable for such use.

(1) **MICRO FUSES**
Voltage ratings: UL, 125 volts; CSA, 0-250 volts
Current ratings: UL, 0-10 amps; CSA, 0-60 amps
Interrupting rating: 50 amps rms symmetrical

(2) **MINIATURE FUSES** (CSA classifies these as Supplemental Fuses)
Voltage ratings: UL, 125 or 250 volts; CSA, 0-600 volts
Current ratings: UL, 0-30 amps; CSA, 0-60 amps
Interrupting rating: 10,000 amps rms symmetrical

(3) **MISCELLANEOUS CARTRIDGE FUSES** (CSA classifies these as Supplemental Fuses)
Voltage ratings: UL, 125-1000 volts; CSA, 0-100 volts
Current ratings: UL, 0-30 amps; CSA 0-60 amps
Interrupting ratings: 10,000, 50,000, or 100,000 amps rms symmetrical

Time delay (Optional); Minimum delay at 200% fuse rating:
5 seconds for fuses rated 3 amps or less
12 seconds for fuses rated more than 3 amps

LF SERIES: BLF, BLN, BLS, FLA, FLM, FLQ, FLU, KLK, KLKD (600 Volts DC), SPF
NOTE: Littelfuse electronic fuses are also covered by these standards; see electronic section of this catalog, or request Electronic Designer's Guide (Publication No. EC101) for complete listing.

PAGE: 32

SPECIAL PURPOSE FUSES

There are no UL Standards covering this category of fuses. These fuses have special characteristics designed to protect special types of electrical or electronic equipment such as diodes, SCR, transistors, thyristors, capacitors, integrally fused circuit breakers, parallel cable runs, etc.
Fuses may be UL Recognized for use as a component in UL Listed equipment.
UL Recognized fuses are tested for characteristics such as published interrupting capacity. They are also covered by UL re-examination service.
Non-renewable
VOLTAGE RATINGS: up to 1000 volts AC and/or DC
AMPERE RATINGS: up to 6000 amperes
INTERRUPTING RATINGS: up to 200,000 amperes
Many of these fuses are extremely current limiting. When considering application of these fuses, or if you have special requirements, contact Littelfuse Technical Support Group for assistance.

LF SERIES: KLC, LA15QS, LA30QS, LA50QS, LA60QS, LA60X, LA70QS, LA100P, LA120X, LA070URD, LA130URD, L15S, L25S, L50S, L60S, L70S, JLLS 900 amp through 1200 amp

PAGES: 57-78

Non-Current Limiting

CLASS H

STANDARDS: UL Standard 248-6
CSA Standard C22.2, No. 59.1
Also known as NEMA Class H, and sometimes referred to as "NEC" or "Code" fuses
VOLTAGE RATINGS: 250 and 600 volts, AC
AMPERE RATINGS: 0-600 amps
INTERRUPTING RATINGS: 10,000 amps rms symmetrical
Two types: one-time and renewable
Physically interchangeable with UL Classes K1 & K5;
Fits UL Class H fuse holders which will also accept K1, K5, RK5, and RK1 fuses.
Manufacturers are upgrading Class H One-time fuses to Class K5 per UL Standard 248-9D, See Class K fuses.

ONE-TIME FUSES (NON-RENEWABLE)

Time delay: Optional
Time-delay fuses must hold 500% current rating for a minimum of ten seconds.

LF SERIES: NLKP

PAGE: 21

RENEWABLE FUSES

Only Class H fuses may be renewable. While time delay is optional, no renewable fuses meet requirements for time delay.
Some renewable fuses have a moderate amount of time delay, referred to as "time lag" to differentiate from true time delay.

LF SERIES: RLN, RLS
REPLACEABLE LINKS SERIES: LKN, LKS

PAGE: 22

PLUG FUSES

STANDARDS: UL Standard 248-11,
CSA Standard C22.2, No. 59.1
VOLTAGE RATINGS: 125 volts AC only
AMPERE RATINGS: 0-30 amps
INTERRUPTING RATINGS: 10,000 amps rms symmetrical. Interrupting rating need not be marked on fuse.
Two types: Edison-base and Type S
EDISON-BASE: Base is same as standard light bulb. All amp ratings interchange able. NEC permits Edison-base plug fuses to be used only as replacements for existing fuses, and only when there is no evidence of tampering or overfusing.
TYPE S: Not interchangeable with Edison-base fuses unless non-removable Type S fuse adapter is installed in Edison-base fuse socket. To prevent overfusing, adapters have three ampere ratings: 10-15, 16-20, and 21-30 amps.
Time delay: Fuses may be time delay, if so, they are required to hold 200% of rating for 12 seconds minimum.
NOTE: Plug fuses may be used where there is not more than 125 volts between conductors or more than 150 volts from any conductor to ground. This permits their use in 120/240 volts grounded, single-phase circuits.

LF SERIES: Edison-base: TOO, TLO
Type S: SOO, SLO
Type S Adapters: SAO

PAGE: 63

ELECTRICAL SAFETY GUIDE

Introduction

Electrical safety is an important issue for employers and employees alike. Unfortunately, thousands of electrical accidents continue to occur each year resulting in permanent disabilities to personnel and excessive medical and equipment replacement costs.

OSHA requirements are often the motivating factor increasing electrical safety in the workplace. OSHA continues to increase enforcement activities and is seeking to increase penalties for violations.

Typical OSHA violations related to electrical safety include improper Lockout/Tagout, faulty electrical wiring, failure to follow electrical safe work practices, failure to assess and identify hazards, failure to train employees and failure to provide PPE (personal protective equipment) to workers.

Industry consensus standards such as NFPA 70E, *Standard for Electrical Safety in the Workplace*, has been created at the request of OSHA to define and quantify electrical hazards including Shock, Arc-Flash and Arc-Blast.

Steps to Electrical Safety Compliance

- Define the project scope and identify any current safety program gaps
- Collect data and document your electrical system
- Evaluate your electrical system through engineering analysis
- Identify hazards and re-engineer to reduce hazards
- Label equipment to communicate hazards
- Update or develop an Electrical Safety Program
- Obtain Personnel Protective Equipment (PPE) and insulated tools
- Train Personnel
- Maintain and Audit One-Line Drawings and Electrical Safety Programs

WHAT OSHA REQUIRES YOU... TO COMPLY WITH 1910 SUBPARTS	**HOW NFPA 70E MUST BE FOLLOWED...** TO COMPLY WITH 1910 SUBPART S
You MUST assess and identify all hazards above 50 volts	NFPA 70E explains how to perform a Shock & Arc-Flash Hazard Assessment down to 50 volts using tables and calculations
You MUST put safeguards in place for hazards above 50 volts	NFPA 70E establishes Hazard Risk Categories, Protection Boundaries, LO/TO, PPE requirements and the use of Energized Work Permits
You MUST train employees on safe work practices	NFPA 70E defines Qualified and Unqualified workers along with training requirements

Table 5 - Comparison of OSHA and NFPA 70E

OSHA Standard 29 Part 1910 Subpart S (electrical) generally addresses electrical safety standards, work practices, and maintenance requirements.

NFPA 70E *Standard for Electrical Safety in the Workplace* is an industry consensus standard that focuses on safety requirements to protect employees. OSHA commonly is referred to as the "What" or "Shall" and NFPA 70E as the "How" with regards to electrical safety compliance.

OSHA and NFPA 70E reinforce the need for Electrical Hazard Analysis. Electrical Hazard Analysis should address all potential hazards including Shock, Arc-Flash, Arc-Blast and burns. OSHA's general duty clause requires a workplace free from hazards and OSHA 1910.132(d) requires employers to identify hazards and protect workers. NFPA 70E Article 130.3(B)(1) specifically requires Electrical Hazard Analysis within all areas of the electrical system that operate at 50 volts or greater.

© 2012 Littelfuse POWR-GARD® Products Catalog

ELECTRICAL SAFETY GUIDE

Sources of Electrical Hazards and Faults

- Exposed energized parts
- Equipment fatigue or failure
- Accidental contact with energized parts
- Worn or broken insulation
- Loose connections
- Improperly maintained equipment or circuit breakers
- Water or liquid near electrical equipment
- Obstructions near or on equipment
- Improper grounding

Types of Electrical Faults

It is well documented and estimated that 95% of electrical faults start as ground faults. The remaining 5% are either phase-to-phase or three-phase faults. So in essence, if we are able to eliminate phase-to-ground faults, or 95% of all faults, we have essentially reduced the potential for 95% of the Arc-Flash Hazard, making the electrical system much safer.

LEADING INITIATORS OF FAULTS	% OF ALL FAULTS
Exposure to moisture	22.5%
Shortening by tools, rodents, etc.	18.0%
Exposure to dust	14.5%
Other mechanical damage	12.1%
Exposure to chemicals	9.0%
Normal deterioration from age	7.0%

Table 6 - Leading initiators of electrical faults

Reducing Electrical Hazards

There are many methods and practices for reducing Arc-Flash and other electrical hazards while conforming to OSHA, NEC®, and NFPA 70E regulations and guidelines. Circuit designers and electrical engineers should carefully consider the following recommendations:

- Design the hazard out of the system through engineering design and component selection
- Identify and assess electrical hazards
- Use and upgrade to current-limiting overcurrent protective devices
- Implement an Electrical Safety Program
- Observe safe work practices
- Use properly selected Personal Protective Equipment (PPE) including insulated tools
- Use Warning Labels to identify and communicate electrical hazards
- Enforce Lockout/Tagout procedures and use Energized Electrical Work Permits
- Increase system protection by achieving Selective Coordination and using Ground Fault Protection devices.

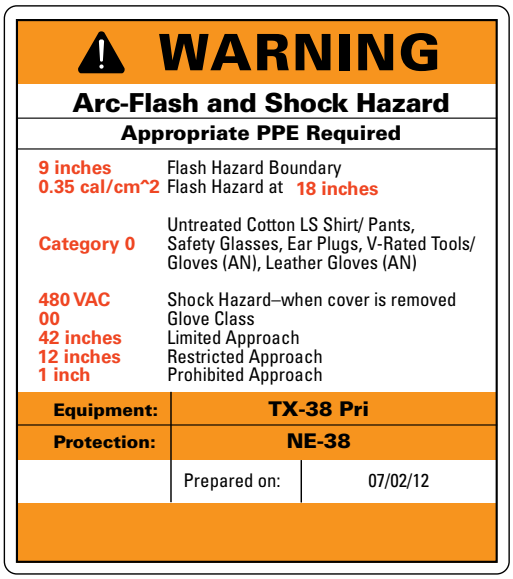

Example of warning label

© 2012 Littelfuse POWR-GARD® Products Catalog

TERMS AND DEFINITIONS

Adjustable Alarm Level – A setting on a protection relay at which an LED or an output contact operates to activate a visual or audible alarm.

Adjustable Time Delay – A setting on a protection relay that determines the time between the fault detection and relay operation.

AIC or A.I.C. – See Interrupting Capacity.

AIR or A.I.R. – See Interrupting Rating.

Alarm Relay Contact – The output of the relay that acts as a switch and is connected to a visual or audible alarm.

Ambient Temperature – The air temperature surrounding a device. For fuses or circuit breakers in an enclosure, the air temperature within the enclosure.

Ampacity – The current in amperes that a conductor can carry continuously under the conditions of use without exceeding its temperature rating. It is sometimes informally applied to switches or other devices which are more properly referred to by their ampere rating.

Ampere Rating – The current rating, in amperes, that is marked on fuses, circuit breakers, or other equipment.

Ampere-Squared-Seconds (I^2t) – A means of describing the thermal energy generated by current flow. When a fuse is interrupting a current within its current-limiting range, the term is usually expressed as melting, arcing, or total clearing I^2t.

- Melting I^2t is the heat energy passed by a fuse after an overcurrent occurs and until the fuse link melts. It equals the rms current squared multiplied by the melting time in seconds. For times less than 0.004 seconds, melting I^2t approaches a constant value for a given fuse.
- Arcing I^2t is the heat energy passed by a fuse during its arcing time. It is equal to the rms arcing current squared (see definition below), multiplied by arcing time.
- Clearing I^2t (also Total Clearing I^2t) is the ampere-squared seconds (I^2t) through an overcurrent device from the inception of the overcurrent until the current is completely interrupted. Clearing I^2t is the sum of the Melting I^2t plus the Arcing I^2t.

Analog Output – A 0–1 mA, 4–20 mA or 0–5 Vdc signal from a protection relay used to pass information to a device or controller.

Arc-Blast – A pressure wave created by the heating, melting, vaporization, and expansion of conducting material and surrounding gases or air.

Arc-Flash – The sudden release of heat energy and intense light at the point of an arc. Can be considered a short-circuit through the air, usually created by accidental contact between live conductors.

Arc Gap – The distance between energized conductors or between energized conductors and ground. Shorter arc gaps result in less energy being expended in the arc, while longer gaps reduce arc current. For 600 volts and below, arc gaps of 1.25 inches (32 mm) typically produce the maximum incident energy.

Arc Rating – A rating assigned to material(s) that relates to the maximum incident energy the material can resist before break open of the material or onset of a second-degree burn. The arc rating is typically shown in cal/cm².

Arcing Current (See *Figure 11*) – The current that flows through the fuse after the fuse link has melted and until the circuit is interrupted.

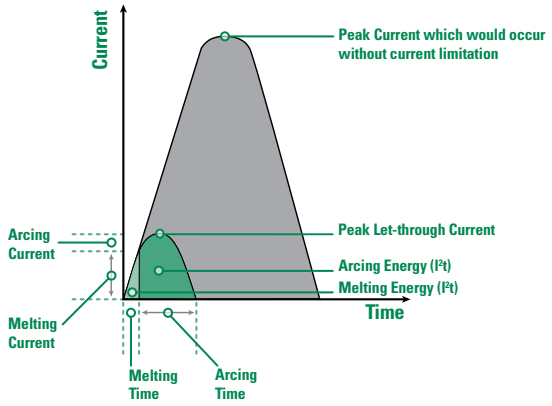

Figure 11 – Arcing and melting currents plus arcing, melting and clearing times

Arcing I^2t – See Ampere-Squared-Seconds (I^2t).

Arcing Fault – A short-circuit that arcs at the point of fault. The arc impedance (resistance) tends to reduce the short-circuit current. Arcing faults may turn into bolted faults by welding of the faulted components. Arcing faults may be phase-to-phase or phase-to-ground.

Arcing Time (See *Figure 11*) – The time between the melting of a fuse link or parting of circuit breaker contacts, until the overcurrent is interrupted.

Arc Voltage (See *Figure 12*) – Arc voltage is a transient voltage that occurs across an overcurrent protection device during the arcing time. It is usually expressed as peak instantaneous voltage (V_{peak} or E_{peak}), or on rare occasion as rms voltage.

Asymmetrical Current – See Symmetrical Current.

Available Short-Circuit Current (also Available or Prospective Fault Current) – The maximum rms Symmetrical Current that would flow at a given point in a system under bolted-fault conditions. Short-circuit current is maximum during the first half-cycle after the fault occurs. See definitions of Bolted Fault and Symmetrical Current.

© 2012 Littelfuse POWR-GARD® Products Catalog

TERMS AND DEFINITIONS

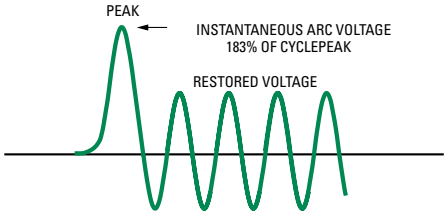

Figure 12 – Transient overvoltage during arcing time

Blade Fuse – See Knife Blade Fuse.

Body – The part of a fuse enclosing the fuse elements and supporting the contacts. Body is also referred to as cartridge, tube, or case.

Bolted Fault – A short-circuit that has no electrical resistance at the point of the fault. It results from a firm mechanical connection between two conductors, or a conductor and ground. Bolted faults are characterized by a lack of arcing. Examples of bolted faults are a heavy wrench lying across two bare bus bars, or a crossed-phase condition due to incorrect wiring

Boundaries of Approach – Protection boundaries established to protect personnel from shock and Arc-Flash hazards.

Calorie – The amount of heat needed to raise the temperature of one gram of water by one degree Celsius.1 cal/cm^2 is equivalent to the exposure on the tip of a finger by a cigarette lighter for one second.

Cartridge Fuse – A fuse that contains a current-responsive element inside a tubular fuse body with cylindrical ferrules (end caps).

Case Size (also Cartridge Size) – The maximum allowable ampere rating of a cartridge fuse having defined dimensions and shape. For example, case sizes for UL Listed Class H, K, J, RK1, and RK5 are 30, 60, 100, 200, 400, and 600 amperes. The physical dimensions vary with fuse class, voltage, and ampere rating. UL Standards establish the dimensions for each UL Fuse Class. This catalog's product section contains case size dimensions for all Littelfuse POWR-GARD® fuses.

Clearing I^2t – See Ampere-Square-Seconds (I^2t).

Clearing Time (see *Figure 11*) – The time between the initiation of an overcurrent condition to the point at which the overcurrent is interrupted. Clearing Time is the sum of Melting Time and Arcing Time.

Conformal Coating – Coating used to protect circuit boards from pollutants, corrosion, and mildew.

Contacts (Fuse) – The external metal parts of the fuse used to complete the circuit. These consist of ferrules, caps, blades or terminals, as shown in this catalog.

Coordination or Coordinated System – See Selective Coordination.

Continuous Load – An electrical load where the maximum current is expected to continue for three hours or more.

CT Loop – The electrical circuit between a current transformer and a protection relay or monitoring device.

Current-Based Protection – Protection parameters (trip-levels/ data collection etc.) derived from current levels in a circuit.

Current-limiting Fuse (See *Figure 13*) – A fuse which, when interrupting currents within its current-limiting range, reduces the current in the faulted circuit to a magnitude substantially less than that obtainable in the same circuit if the device was replaced with a solid conductor having comparable impedance. To be labeled "current limiting," a fuse must mate with a fuse block or fuse holder that has either a rejection feature or dimensions that will reject non-current-limiting fuses.

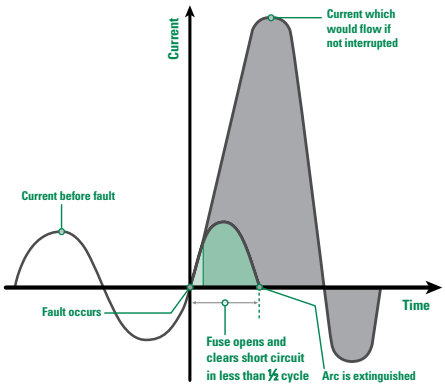

Figure 13 – Current-limiting Fuse

Current-limiting Range - For an individual overcurrent protective device, the current-limiting range begins at the lowest value of rms symmetrical current at which the device becomes current-limiting (the threshold current) and extends to the maximum interrupting capacity of the device. See definitions of Threshold Current and Interrupting Capacity.

Current Rating – See Ampere Rating.

Current Transformer (CT) – A transformer that produces a current in its secondary circuit in a known proportion to current in its primary circuit.

Data Logging – Collecting and storing information in a format that can be reviewed for trending, troubleshooting and reporting.

DFT (Discrete Fourier Transform) Harmonic Filter – An algorithm used to measure the fundamental component of current and voltage and reject harmonics. This allows lower trip settings and eliminates nuisance trips due to harmonics.

TERMS AND DEFINITIONS

Distance to Arc – Refers to the distance from the receiving surface to the arc center. The value used for most calculations is typically 18 inches.

Dual-Element Fuse – A fuse with internal construction consisting of a separate time-delay overload element(s) that interrupts overcurrents up to approximately 500%-600% of its nominal rating, plus separate fuse links that quickly open higher value currents. All dual-element fuses have time delay, but, since there are other methods of achieving time delay, not all time-delay fuses have dual-element construction. See Time-Delay Fuse.

EFCT (Earth Fault Current Transformer) – A current transformer engineered to accurately detect low level ground-fault current.

Electrical Hazard Analysis – A study performed to identify the potential electrical hazards to which personnel may be exposed. The analysis should address both shock and Arc-Flash hazards.

Electrically Safe Work Condition – Condition where the equipment and or circuit components have been disconnected from electrical energy sources, locked/tagged out, and tested to verify all sources of power are removed.

Element – A fuse's internal current-carrying components that melt and interrupt the current when subjected to an overcurrent of sufficient duration or value. Also called fuse link.

Fail-Safe Mode (also known as Under Voltage or UV) – Output relay is energized during normal (not tripped) operation. If the protection relay loses supply voltage, the system will trip or alarm.

Fast-Acting Fuse – May also be termed Normal-opening fuse, this is a fuse that has no intentional or built-in time delay. Actual opening time is determined by the fuse class, the overcurrent, and other conditions. Fast-acting is indicated on the fuse label by "Fast-Acting", "F-A", "F", or other suitable marking.

Fault – Same as Short-Circuit and used interchangeably.

Fault Current – The current that flows when a phase conductor is faulted to another phase or ground.

Feeder Protection – Overcurrent or overvoltage devices installed on a feeder circuit to supplement, compliment or replace downstream protective devices.

Filler – A material, such as granular quartz, used to fill a section or sections of a fuse and aid in arc quenching.

Filter – An algorithm used to measure the fundamental component of current and voltage and reject harmonics. This allows lower trip settings and eliminates nuisance trips due to harmonics.

Flash Hazard Analysis – A study that analyzes potential exposure to Arc-Flash hazards. The outcome of the study establishes Incident Energy levels, Hazard Risk Categories, Flash Protection Boundaries, and required PPE. It also helps define safe work practices.

Flash Protection Boundary – A protection boundary established to protect personnel from Arc-Flash hazards. The Flash Protection Boundary is the distance at which an unprotected worker can receive a second-degree burn to bare skin.

Fuse – An overcurrent protective device consisting of one or more current carrying elements enclosed in a body fitted with contacts, so that the fuse may be readily inserted into or removed from an electrical circuit. The elements are heated by the current passing through them, thus interrupting current flow by melting during specified overcurrent conditions.

Ground Continuity Monitor - A protection relay that continuously monitors a ground conductor and trips if this conductor opens or shorts to the ground-check conductor.

Ground-Fault – Unintentional contact between a phase conductor and ground or equipment frame. The words "ground" and "earth" are used interchangeably when it comes to electrical applications.

Ground-Fault Current – The current that returns to the supply neutral through the ground-fault and the ground-return path.

Ground-Fault Protection – A system that protects equipment from damaging ground-fault current by operating a disconnecting means to open all ungrounded conductors of a faulted circuit. This protection is at current levels less than those required to operate a supply circuit overcurrent device.

Ground-Fault Relay – A protection relay designed to detect a phase-to-ground-fault on a system and trip when current exceeds the pickup setting for greater than the trip time setting.

Hazard Risk Category – A classification of risks (from 0 to 4) defined by NFPA 70E. Each category requires PPE and is related to incident energy levels.

High-Resistance Grounding – Achieved when a neutral-ground resistor (NGR) is used to limit the current to a low level. Typically high-resistance grounding is 25 A and lower. See Low-Resistance Grounding.

I^2t – See Ampere-Squared-Seconds (I^2t).

IEEE Device Numbers – The devices in switching equipment are referred to by numbers, according to the functions they perform. These numbers are based on a system which has been adopted as standard for automatic switchgear by IEEE. This system is used on connection diagrams, in instruction books and in specifications.

IEC Type 2 Protection – Fused protection for control components that prevents damage to these components under short-circuit conditions. See definition of No Damage.

© 2012 Littelfuse POWR-GARD® Products Catalog

TERMS AND DEFINITIONS

Incident Energy – The amount of thermal energy impressed on a surface generated during an electrical arc at a certain distance from the arc. Typically measured in cal/cm^2.

Instantaneous Peak Current (I_p or I_{peak}) – The maximum instantaneous current value developed during the first half-cycle (180 electrical degrees) after fault inception. The peak current determines magnetic stress within the circuit. See Symmetrical Current.

Insulation Monitoring – Monitoring the resistance from phase to ground to detect insulation breakdown on a system.

Interrupting Capacity (AIC) – The highest available symmetrical rms alternating current (for DC fuses the highest direct current) at which the protective device has been tested, and which it has interrupted safely under standardized test conditions. The device must interrupt all available overcurrents up to its interrupting capacity. Also commonly called interrupting rating. See Interrupting Rating below.

Interrupting Rating (IR, I.R., AIR or A.I.R.) – The highest RMS symmetrical current, at specified test conditions, which the device is rated to interrupt. The difference between interrupting capacity and interrupting rating is in the test circuits used to establish the ratings.

Inverse-time Characteristics – A term describing protective devices whose opening time decreases with increasing current.

IR or I.R. (also AIR or A.I.R.) – See Interrupting Rating above.

Kiloamperes (kA) – 1,000 amperes.

Knife Blade Fuse – Cylindrical or square body fuses with flat blade terminals extending from the fuse body. Knife blades may be designed for insertion into mating fuse clips and/or to be bolted in place. Knife blade terminals may include a rejection feature that mates with a similar feature on a fuse block of the same class.

Leakage Current – Very low level ground-fault current, typically measured in milliamperes (mA, thousandths of amperes).

Limited Approach Boundary – An approach boundary to protect personnel from shock. A boundary distance is established from an energized part based on system voltage. To enter this boundary, unqualified persons must be accompanied with a qualified person and use the proper PPE.

Low-Resistance Grounding – A Resistance Grounded System that allows high currents to flow during a ground-fault. Typically 100A and higher is considered Low-Resistance grounding. See High-Resistance Grounding.

Melting Current (see *Figure 11*) – The current that flows through the fuse from the initiation of an overcurrent condition to the instant arcing begins inside the fuse.

Melting I^2t – See Ampere-Squared-Seconds (I^2t).

Melting Time (see *Figure 11*) – The time span from the initiation of an overcurrent condition to the instant arcing begins inside the fuse.

Motor Protection – Overload protection designed to protect the windings of a motor from high current levels. Modern motor protection relays add many additional features, including metering, data logging and communications.

NEC – In general, the National Electrical Code® (NEC®). Specifically, as referenced herein, NEC refers to NFPA Standard 70, *National Electrical Code*, National Fire Protection Association, Quincy, MA 02269.

Sections of the NEC reprinted herein, and/or quotations there from, are done so with permission. The quoted and reprinted sections are not the official position of the National Fire Protection Association which is represented only by the Standard in its entirety. Readers are cautioned that not all authorities have adopted the most recent edition of the NEC; many are still using earlier editions.

Neutral Grounding Resistor (NGR) – A current-limiting resistor connecting the power-system neutral to ground.

No Damage – A term describing the requirement that a system component be in essentially the same condition after the occurrence of a short-circuit as prior to the short-circuit.

Non-renewable Fuse – A fuse that must be replaced after it has opened due to an overcurrent. It cannot be restored to service.

Normal-opening Fuse – See Fast-Acting Fuse.

Nuisance Trip – An undesired change in relay output due to misinterpreted readings.

One-time Fuse – Technically, any non-renewable fuse. However, the term usually refers to UL Class H fuses and to fast acting UL Class K5 fuses. Such fuses are not current-limiting and do not have a rejection feature. One-time fuses are also referred to as "Code" fuses.

Open CT Hazard – An open-circuited CT secondary can develop a dangerously high voltage when the primary is energized.

Overcurrent – Any current larger than the equipment, conductor, or devices are rated to carry under specified conditions.

Overload – An overcurrent that is confined to the normal current path (e.g., not a short-circuit), which if allowed to persist, will cause damage to equipment and/or wiring. Additional information regarding fuse applications for overload protection can be found earlier in this Technical Application Guide.

TERMS AND DEFINITIONS

Peak Let-through Current (See *Figure 14*) – The maximum instantaneous current that passes through an overcurrent protective device during its total clearing time when the available current is within its current-limiting range.

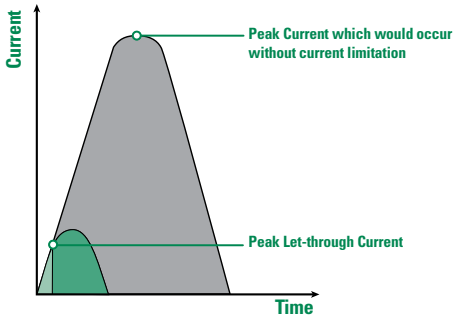

Figure 14 – Peak Let-through Current

Phase Current – The current present in a phase conductor.

Phase Voltage – The voltage measured between a phase conductor and ground.

Power Factor (X/R) – As used in overcurrent protection, power factor is the relationship between the inductive reactance (X) and the resistance (R) in the system during a fault. Under normal conditions a system may be operating at a 0.85 power factor (85%). When a fault occurs, much of the system resistance is shorted out and the power factor may drop to 25% or less. This may cause the current to become asymmetrical. See definition of Symmetrical Current. The UL test circuits used to test fuses with interrupting ratings exceeding 10,000 amperes are required to have a power factor of 20% or less. Since the power factor of test circuits tends to vary during test procedures, actual test circuits are usually set to a 15% power factor. The resulting asymmetrical current has an rms value of 1.33 times the available symmetrical rms. The instantaneous peak current of the first peak after the fault is 2.309 times the available symmetrical rms.

PPE – An acronym for Personal Protective Equipment. It can include clothing, tools, and equipment.

Primary Rating (for CTs) – The current rating of the primary side of a current transformer. The first number in the ratio 500:5 is the primary rating. Under ideal conditions 500 A of primary current flow through the CT will produce 5 A of current out the secondary terminals.

Prohibited Approach Boundary – An approach boundary to protect personnel from shock. Work in this boundary is considered the same as making direct contact with an energized part. Only qualified persons are allowed to enter this boundary and they must use the proper PPE.

Prospective Current – See Available Short-Circuit Current.

Protection Boundaries – Boundaries established to protect personnel from electrical hazards.

Pulsing – Modulating the ground-fault current on a resistance grounded system using a contactor to short out part of the NGR elements (or to open one of two NGRs connected in parallel). Another version of pulsing is imposing a higher frequency signal on power lines and using a wand detector to locate the point of fault on a conductor.

QPL (Qualified Products List) – A list of approved fuses and holders that meet various Military specifications.

Qualified Person – A person who is trained, knowledgeable, and has demonstrated skills on the construction and operation of the equipment, and can recognize and avoid electrical hazards that may be encountered.

Rating – A designated limit of operating characteristics based on definite conditions such as current rating, voltage rating and interrupting rating.

Rectifier Fuse – See Semiconductor Fuse.

Rejection Feature – The physical characteristic(s) of a fuse block or fuse holder that prevents the insertion of a fuse unless it has the proper mating characteristics. This may be achieved through the use of slots, grooves, projections, or the actual physical dimensions of the fuse. This feature prevents the substitution of fuses of a Class or size other than the Class and size intended.

Relay – An electrical switch that opens and closes a contact (or contacts) under the control of another circuit. Typically an electromagnet.

Renewable Element (also Renewable Link) – A renewable fuse current-carrying component that is replaced to restore the fuse to a functional condition after the link opens due to an overcurrent condition.

Renewable Fuse – A fuse that may be readily restored to service by replacing the renewable element after operation.

Resistance-Grounded System – An electrical system in which the transformer or generator neutral is connected to ground through a current-limiting resistor. See Solidly Grounded System, Ungrounded System.

Restricted Approach Boundary – An approach boundary to protect personnel from shock. A boundary distance is established from an energized part based on system voltage. Only qualified persons are allowed in the boundary and they must use the proper PPE.

Selective Coordination (See *Figure 15*) – In a selectively coordinated system, only the protective device immediately on the line side of an overcurrent opens. Upstream protective devices remain closed. All other equipment remains in service, which simplifies the identification and location of overloaded

© 2012 Littelfuse POWR-GARD® Products Catalog

TERMS AND DEFINITIONS

equipment or short-circuits. For additional information, refer to the Selective Coordination pages of this Technical Application Guide.

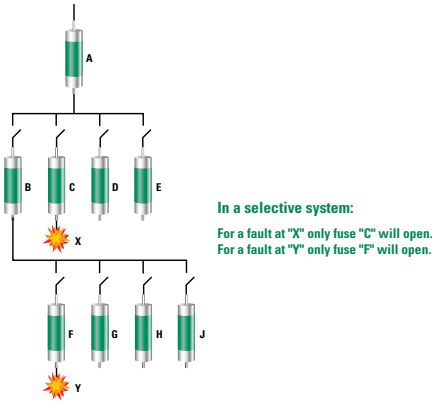

Figure 15 – Selective Coordination Example

Semiconductor Fuse – A fuse specifically designed to protect semiconductors such as silicon rectifiers, silicon-controlled rectifiers, thyristors, transistors, and similar components.

Sensitive Ground-Fault Protection – Protection designed to accurately detect extremely low ground-fault current levels without nuisance tripping.

Shock – A trauma subjected to the body by electrical current. When personnel come in contact with energized conductors, it can result in current flowing through their body often causing serious injury or death.

Short-Circuit (See *Figure 16*) – A current flowing outside its normal path, caused by a breakdown of insulation or by faulty equipment connections. In a short-circuit, current bypasses the normal load. Current is determined by the system impedance (AC resistance) rather than the load impedance. Short-circuit currents may vary from fractions of an ampere to 200,000 amperes or more.

Short-Circuit Current Rating (SCCR) – The prospective symmetrical fault current at a nominal voltage to which an apparatus or system is able to be connected without sustaining damage exceeding defined acceptance criteria.

Short-Circuit Rating – The maximum RMS symmetrical short-circuit current at which a given piece of equipment has been tested under specified conditions, and which, at the end of the test is in essentially the same condition as prior to the test. Short-circuit ratings (also called withstand ratings) apply to equipment that will be subjected to fault currents, but which are not required to interrupt them. This includes switches, busway (bus duct), switchgear and switchboard structures, motor control centers and transformers.

Most short-circuit ratings are based on tests which last three complete electrical cycles (0.05 seconds). However, if the equipment is protected during the test by fuses or by a circuit breaker with instantaneous trips, the test duration is the time required for the overcurrent protective device to open the circuit.

When protected as such during testing, the equipment instructions and labels must indicate that the equipment shall be protected by a given fuse class and rating or by a specific make, type, and rating of circuit breaker. Circuit breakers equipped with short-delay trip elements instead of instantaneous trip elements have withstand (short-circuit) ratings in addition to their interrupting rating. The breaker must be able to withstand the available fault current during the time that opening is delayed.

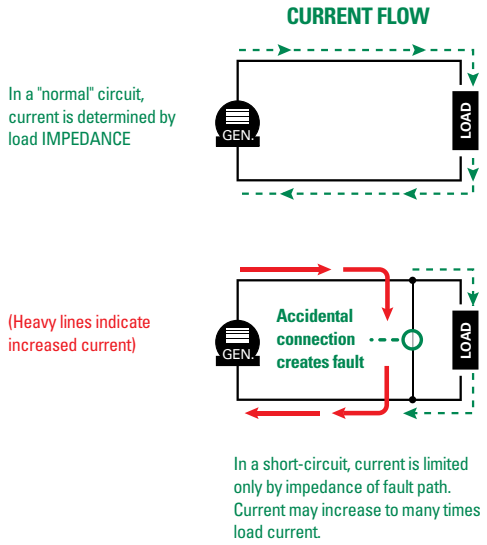

Figure 16 – Current Flow in Normal and Short Circuit Situations

Solidly Grounded System – An electrical system in which the neutral point of a wye connected supply transformer is connected directly to ground.

Symmetrical Current – The terms "Symmetrical Current" and "Asymmetrical Current" describe an AC wave symmetry around the zero axis. The current is symmetrical when the peak currents above and below the zero axis are equal in value, as shown in *Figure 17 (next page)*. If the peak currents are not equal, as shown in *Figure 18*, the current is considered asymmetrical. The degree of asymmetry during a fault is determined by the change in power factor (X/R) and the point in the voltage wave when the fault occurs. See definition of Power Factor. In general, lower short-circuit power factors increase the degree of asymmetry.

TERMS AND DEFINITIONS

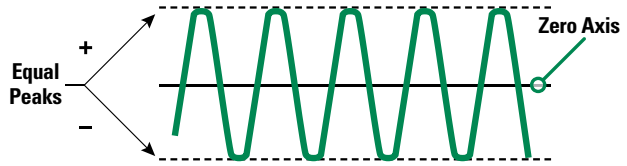

Figure 17 – Symmetrical Current

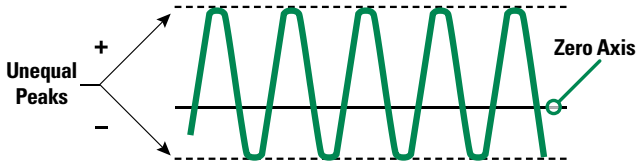

Figure 18 – Asymmetrical Current

Threshold Current – The minimum current for a given fuse size and type at which the fuse becomes current-limiting. It is the lowest value of available rms symmetrical current that will cause the device to begin opening within the first 1/4 cycle (90 electrical degrees) and completely clear the circuit within 1/2 cycle (180 electrical degrees). The approximate threshold current can be determined from the fuse's peak let-through charts. (See *Figure 19.*)

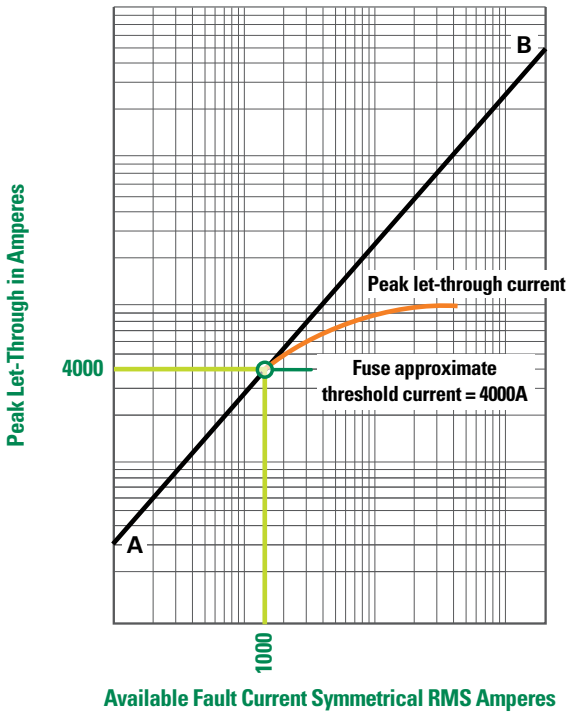

Figure 19 – Determining Threshold Current from Peak Let-through Chart

Threshold Ratio – Consists of the threshold current divided by the ampere rating of a specific type or class of overcurrent device. A fuse with a threshold ratio of 15 becomes current-limiting at 15 times its current rating.

Time-Delay Fuse – Fuses designed with an intentional, built-in delay in opening. When compared to fast-opening fuses, time-delay fuses have an increased opening time for overcurrents between approximately 200% and 600% of the fuse's current rating. Time-delay is indicated on the fuse label by "Time-Delay", "T-D", "D", or other suitable marking. Time-delay in the overload range (200%-600% of the fuse rating) permits the fuse to withstand system switching surges, motor starting currents, and other harmless temporary overcurrents.

UL Standards require time-delay Class H, K, RK1, RK5, and J fuses to hold 500% of their normal current rating for a minimum of 10 seconds. They must also pass the same opening time tests (135% and 200% of current rating) as fast acting fuses.

Time-delay Class CC, CD, G, Plug, and Miscellaneous fuses have different requirements. For more information, please refer to the corresponding descriptions provided in the Product Information Section.

For the UL Standard, Class L fuses have no standard time-delay. The time-delay varies from series to series for a given manufacturer, as well as from manufacturer to manufacturer. For reference, Littelfuse KLPC series POWR-PRO® fuses hold 500% of rated current for a minimum of 10 seconds.

Ungrounded System – An electrical system in which no point in the system is intentionally grounded. This was most common in process industries where continuity of service during a single-phase-to-ground-fault was required.

Unqualified Person – A person that does not possess all the skills and knowledge or has not been trained for a particular task.

Voltage Rating – The maximum rms AC voltage and/or the maximum DC voltage at which the fuse is designed to operate. For example, fuses rated 600 volts and below may be applied at any voltage less than their rating. There is no rule for applying AC fuses in DC circuits such as applying the fuse at half its AC voltage rating. Fuses used on DC circuits must have DC ratings.

Withstand Rating – See Short-Circuit.

© 2012 Littelfuse POWR-GARD® Products Catalog

MOTOR PROTECTION TABLES

Selection of Class RK5 Fuses (FLNR_ID / FLSR_ID / IDSR Series) or POWR-PRO® Class RK1 Fuses (LLNRK / LLSRK / LLSRK_ID Series) Based on Motor Full Load Amps

Using AC Motor Protection Tables to Select Fuse Ratings

Time-delay RK1 and RK5 fuse ratings selected in accordance with the following recommendations also meet NEC® requirements for Motor Branch circuit and Short-Circuit Protection.

Selecting Fuses for Motor Running Protection Based on Motor Horsepower

Motor horsepower and motor Full Load Amperes (FLA) shown are taken from NEC Tables 430.248 through 430.250 covering standard speed AC motors with normal torque characteristics. Fuse ratings for motors with special characteristics may need to vary from given values.

If motor running protection will be provided by the fuses, select fuse ratings for correct type of motor from Motor Protection Table Columns headed, "Without Overload Relays."

If overload relays will provide principal motor running protection, select fuse ratings for correct type of motor from Motor Protection Table Columns headed, "Back-up Running Protection" or "With Overload Relays." Fuse ratings selected from these columns coordinate with most UL Class 10 and 20 overload relays which covers over 90% of motor applications.

Selecting Fuses for Motor Running Protection Based on Motor Actual Full Load Currents

Better protection is achieved when fuse ratings are based on motor actual FLA obtained from motor nameplates. Locate motor nameplate FLA in the column appropriate for the type of motor and type of protection required. Then select the corresponding ampere rating of the fuse from the first column of that line.

TIME DELAY UL CLASS RK1 OR RK5 FUSE AMPERE RATING	MOTOR RUNNING PROTECTION (USED WITHOUT PROPERLY SIZED OVERLOAD RELAYS) MOTOR FULL-LOAD AMPS		BACK-UP MOTOR RUNNING PROTECTION (USED WITH PROPERLY SIZED OVERLOAD RELAYS) MOTOR FULL-LOAD AMPS	
	MOTOR SERVICE FACTOR OF 1.15 OR GREATER OR WITH TEMP. RISE NOT OVER 40°C.	MOTOR SERVICE FACTOR LESS THAN 1.15 OR WITH TEMP. RISE GREATER THAN 40°C.	MOTOR SERVICE FACTOR OF 1.15 OR GREATER OR WITH TEMP. RISE NOT OVER 40°C.	MOTOR SERVICE FACTOR LESS THAN 1.15 OR WITH TEMP. RISE GREATER THAN 40°C
1/10	0.08-0.09	0.09-0.10	0-0.08	0-0.09
1/8	0.10-0.11	0.11-0.125	0.09-0.10	0.10-0.11
15/100	0.12-0.15	0.14-0.15	0.11-0.12	0.12-0.13
2/10	0.16-0.19	0.18-0.20	0.13-0.16	0.14-0.17
1/4	0.20-0.23	0.22-0.25	0.17-0.20	0.18-0.22
3/10	0.24-0.30	0.27-0.30	0.21-0.24	0.23-0.26
4/10	0.32-0.39	0.35-0.40	0.25-0.32	0.27-0.35
1/2	0.40-0.47	0.44-0.50	0.33-0.40	0.36-0.43
6/10	0.48-0.60	0.53-0.60	0.41-0.48	0.44-0.52
8/10	0.64-0.79	0.70-0.80	0.49-0.64	0.53-0.70
1	0.80-0.89	0.87-0.97	0.65-0.80	0.71-0.87
1 1/8	0.90-0.99	0.98-1.08	0.81-0.90	0.88-0.98
1 1/4	1.00-1.11	1.09-1.21	0.91-1.00	0.99-1.09
1 4/10	1.12-1.19	1.22-1.30	1.01-1.12	1.10-1.22
1 1/2	1.20-1.27	1.31-1.39	1.13-1.20	1.23-1.30
1 6/10	1.28-1.43	1.40-1.56	1.21-1.28	1.31-1.39
1 8/10	1.44-1.59	1.57-1.73	1.29-1.44	1.40-1.57
2	1.60-1.79	1.74-1.95	1.45-1.60	1.58-1.74
2 1/4	1.80-1.99	1.96-2.17	1.61-1.80	1.75-1.96
2 1/2	2.00-2.23	2.18-2.43	1.81-2.00	1.97-2.17
2 8/10	2.24-2.39	2.44-2.60	2.01-2.24	2.18-2.43
3	2.40-2.55	2.61-2.78	2.25-2.40	2.44-2.60
3 2/10	2.56-2.79	2.79-3.04	2.41-2.56	2.61-2.78
3 1/2	2.80-3.19	3.05-3.47	2.57-2.80	2.79-3.04
4	3.20-3.59	3.48-3.91	2.81-3.20	3.05-3.48
4 1/2	3.60-3.99	3.92-4.34	3.21-3.60	3.49-3.91
5	4.00-4.47	4.35-4.86	3.61-4.00	3.92-4.35
5 6/10	4.48-4.79	4.87-5.21	4.01-4.48	4.36-4.87
6	4.80-4.99	5.22-5.43	4.49-4.80	4.88-5.22
6 1/4	5.00-5.59	5.44-6.08	4.81-5.00	5.23-5.43
7	5.60-5.99	6.09-6.52	5.01-5.60	5.44-6.09
7 1/2	6.00-6.39	6.53-6.95	5.61-6.00	6.10-6.52
8	6.40-7.19	6.96-7.82	6.01-6.40	6.53-6.96
9	7.20-7.99	7.83-8.69	6.41-7.20	6.97-7.83
10	8.00-9.59	8.70-10.00	7.21-8.00	7.84-8.70
12	9.60-11.99	10.44-12.00	8.01-9.60	8.71-10.43
15	12.00-13.99	13.05-15.00	9.61-12.00	10.44-13.04
17 1/2	14.00-15.99	15.22-17.39	12.01-14.00	13.05- 15.21
20	16.00-19.99	17.40-20.00	14.01-16.00	15.22-17.39
25	20.00-23.99	21.74-25.00	16.01-20.00	17.40-21.74
30	24.00-27.99	26.09-30.00	20.01-24.00	21.75-26.09
35	28.00-31.99	30.44-34.78	24.01-28.00	26.10-30.43
40	32.00-35.99	34.79-39.12	28.01-32.00	30.44-37.78
45	36.00-39.99	39.13-43.47	32.01-36.00	37.79-39.13
50	40.00-47.99	43.48-50.00	36.01-40.00	39.14-43.48
60	48.00-55.99	52.17-60.00	40.01-48.00	43.49-52.17
70	56.00-59.99	60.87-65.21	48.01-56.00	52.18-60.87
75	60.00-63.99	65.22-69.56	56.01-60.00	60.88-65.22
80	64.00-71.99	69.57-78.25	60.01-64.00	65.23-69.57
90	72.00-79.99	78.26-86.95	64.01-72.00	69.58-78.26
100	80.00-87.99	86.96-95.64	72.01-80.00	78.27-86.96
110	88.00-99.99	95.65-108.69	80.01-88.00	86.97-95.65
125	100.00-119.99	108.70-125.00	88.01-100.00	95.66-108.70
150	120.00-139.99	131.30-150.00	100.01-120.00	108.71-130.43
175	140.00-159.99	152.17-173.90	120.01-140.00	130.44-152.17
200	160.00-179.99	173.91-195.64	140.01-160.00	152.18-173.91
225	180.00-199.99	195.65-217.38	160.01-180.00	173.92-195.62
250	200.00-239.99	217.39-250.00	180.01-200.00	195.63-217.39
300	240.00-279.99	260.87-300.00	200.01-240.00	217.40-260.87
350	280.00-319.99	304.35-347.82	240.01-280.00	260.88-304.35
400	320.00-359.99	347.83-391.29	280.01-320.00	304.36-347.83
450	360.00-399.99	391.30-434.77	320.01-360.00	347.84-391.30
500	400.00-479.99	434.78-500.00	360.01-400.00	391.31-434.78
600	480.00-600.00	521.74-600.00	400.01-480.00	434.79-521.74

Motor Protection White Paper

Download our white paper on motor protection at **littelfuse.com/technicalcenter**

MOTOR PROTECTION TABLES

Selection of Class RK5 Fuses (FLNR_ID / FLSR_ID / IDSR Series) or POWR-PRO® Class RK1 Fuses (LLNRK / LLSRK / LLSRK_ID Series) Based on Motor Horsepower

MOTOR HP	FULL LOAD AMPS	WITHOUT OVERLOAD RELAYS		WITH OVERLOAD RELAYS		SWITCH OR FUSE CLIP RATING
		S.F. = 1.15 OR MORE, TEMP RISE NOT OVER 40°C	S.F. = LESS THAN 1.15 OR TEMP RISE MORE THAN 40°C	S.F. = 1.15 OR MORE, TEMP RISE NOT OVER 40°C	S.F. = LESS THAN 1.15 OR TEMP RISE MORE THAN 40°C	
120 VOLT 1-PHASE MOTORS (120V CIRCUIT)						
1/6	4.4	5	5	5 6/10	5 6/10	30
1/4	5.8	7	6 1/4	7 1/2	7	30
1/3	7.2	9	8	9	9	30
1/2	9.8	12	10	15	12	30
3/4	13.8	15	15	17 1/2	17 1/2	30
1	16	20	17 1/2	20	20	30
1 1/2	20	25	20	25	25	30
2	24	30	25	30	30	30
230 VOLT 1-PHASE MOTORS (240V CIRCUIT)						
1/6	2.2	2 1/2	2 1/2	2 8/10	2 8/10	30
1/4	2.9	3 1/2	3 2/10	4	3 1/2	30
1/3	3.6	4 1/2	4	4 1/2	4 1/2	30
1/2	4.9	5 6/10	5 6/10	6 1/4	6	30
3/4	6.9	8	7 1/2	9	8	30
1	8	10	9	10	10	30
1 1/2	10	12	10	15	12	30
2	12	15	12	15	15	30
3	17	20	17 1/2	25	20	30
5	28	35	30*	35	35	60
7 1/2	40	50	45	50	50	60
10	50	60	50	70	60	60
200 VOLT 3-PHASE MOTORS (208V CIRCUIT)						
1/2	2.5	3	2 8/10	3 2/10	3	30
3/4	3.7	4 1/2	4	5	4 1/2	30
1	4.8	6	5 6/10	6 1/4	6	30
1 1/2	6.9	8	7 1/2	7 1/2	8	30
2	7.8	9	8	10	9	30
3	11	12	12	15	15	30
5	17.5	20	20	25	25	30
7 1/2	25.3	30*	25*	35	30*	60
10	32.2	40	35	45	40	60
15	48.3	60	50	70†	60	60
20	62.1	75	70	80	75	100
25	78.2	90	80	100	90	100
30	92	110	100*	125	110	200
40	120	150	125	150	150	200
50	150	175	150	200	175	200
60	177	200*	200*	225	225	400
75	221	250	250	300	300	400
100	285	350	300	400	350	400
125	359	400*	400*	450	450	600
150	414	500	450	600	500	600
230 VOLT 3-PHASE MOTORS (240V CIRCUIT)						
1/2	2.2	2 8/10	2 1/2	2 8/10	2 8/10	30
3/4	3.2	4	3 1/2	4	4	30
1	4.2	5	4 1/2	5 6/10	5	30
1 1/2	6.0	7 1/2	6 1/4	7 1/2	7 1/2	30
2	6.8	8	7 1/2	9	8	30
3	9.6	12	10	12	12	30
5	15.2	17 1/2	17 1/2	20	17 1/2	30
7 1/2	22	25	25	30	30	30
10	28	35	30*	35	35	60
15	42	50	45	60	50	60
20	54	60*	60*	70	70	100
25	68	80	75	90	80	100
30	80	100	90	100	100	100
40	104	125	110	150	125	200
50	130	150	150	175	150	200
60	154	175	175	200	200	200
75	192	225	200*	250	225	400
100	248	300	250	350	300	400
125	312	350	350	400	400	400
150	360	450	400*	450	450	600
200	480	600	500	600	600	600

MOTOR HP	FULL LOAD AMPS	WITHOUT OVERLOAD RELAYS		WITH OVERLOAD RELAYS		SWITCH OR FUSE CLIP RATING
		S.F. = 1.15 OR MORE, TEMP RISE NOT OVER 40°C	S.F. = LESS THAN 1.15 OR TEMP RISE MORE THAN 40°C	S.F. = 1.15 OR MORE, TEMP RISE NOT OVER 40°C	S.F. = LESS THAN 1.15 OR TEMP RISE MORE THAN 40°C	
460 VOLT 3-PHASE MOTORS (480V CIRCUIT)						
1/2	1.1	1 4/10	1 1/4	1 4/10	1 4/10	30
3/4	1.6	2	1 8/10	2	2	30
1	2.1	2 1/2	2 1/4	2 8/10	2 1/2	30
1 1/2	3.0	3 1/2	3 2/10	4	3 1/2	30
2	3.4	4	3 1/2	4 1/2	4	30
3	4.8	5 6/10	5	6	5 6/10	30
5	7.6	9	8	10	9	30
7 1/2	11	12	12	15	15	30
10	14	17 1/2	15	17 1/2	17 1/2	30
15	21	25	20	30	25	30
20	27	30*	30*	35	35	60
25	34	40	35	45	40	60
30	40	50	45	50	50	60
40	54	60*	60*	70	60*	100
50	65	80	70	90	75	100
60	77	90	80	100	90	100
75	96	110	110	125	125	200
100	124	150	125	175	150	200
125	156	175	175	200	200	200
150	180	225	200*	225	225	400
200	240	300	250	300	300	400
575 VOLT 3-PHASE MOTORS (600V CIRCUIT)						
1/2	0.9	1 1/8	1	1 1/8	1 1/8	30
3/4	1.3	1 6/10	1 4/10	1 6/10	1 6/10	30
1	1.7	2	1 8/10	2 1/4	2	30
1 1/2	2.4	3	2 1/2	3	3	30
2	2.7	3 2/10	2 8/10	3 1/2	3 2/10	30
3	3.9	4 1/2	4	5	4 1/2	30
5	6.1	7 1/2	7	8	7 1/2	30
7 1/2	9	10	10	12	12	30
10	11	12	12	15	15	30
15	17	20	17 1/2	25	20	30
20	22	25	25	30	30	30
25	27	30*	30*	35	35	60
30	32	40	35	40	40	60
40	41	50	45	60	50	60
50	52	60	60	70†	60	60
60	62	75	70	80	75	100
75	77	90	80	100	90	100
100	99	110	110	125	125	200
125	125	150	125	175	150	200
150	144	175	150	200	175	200
200	192	225	200*	250	225	400

NOTES

S.F. = Motor Service Factor
* Fuse Reducers Required
† 100 Amp Switch Required

Motor Protection White Paper

Download our white paper on motor protection at **littelfuse.com/technicalcenter**

© 2012 Littelfuse POWR-GARD® Products Catalog

MOTOR PROTECTION TABLES

Selection of POWR-PRO® Class J Fuses (JTD_ID / JTD Series) Based on Motor Full Load Amps

MOTOR F.L.A.	JTD_ID / JTD AMPERE RATING	MOTOR F.L.A.	JTD_ID / JTD AMPERE RATING	MOTOR F.L.A.	JTD_ID / JTD AMPERE RATING
0.00 – 0.60	8/10	12.1 – 14.5	17 1/2	76.1 – 84.0	110
0.61 – 0.80	1	14.6 – 17.0	20	84.1 – 90.0	125
0.81 – 1.00	1¼	17.1 – 21.0	25	90.1 – 102	150
1.01 – 1.20	1½	21.1 – 25.0	30	103 – 125	175
1.21 – 1.65	2	25.1 – 28.5	35	126 – 144	200
1.66 – 2.00	2½	28.6 – 34.0	40	145 – 162	225
2.01 – 2.40	3	34.1 – 37.0	45	163 – 180	250
2.41 – 3.30	4	37.1 – 41.0	50	181 – 204	300
3.31 – 4.10	5	41.1 – 48.0	60	205 – 240	350
4.11 – 4.90	6	48.1 – 52.0	70	241 – 288	400
4.91 – 6.40	8	52.1 – 59.0	80	289 – 312	450
6.41 – 8.00	10	59.1 – 66.0	90	313 – 360	500
8.01 – 9.80	12	66.1 – 76.0	100	361 – 432	600
9.81 – 12.0	15				

NOTE: For severe motor starting conditions, fuses may be sized up to 225% motor F.L.A. (See NEC® Article 430.52 for Exceptions)

Selection of CCMR Time-Delay Fuses Based on Motor Full Load Amps

MOTOR FULL LOAD CURRENT (F.L.A.)						CCMR AMPERE RATING
FOR MOTORS WITH AN ACCELERATION TIME OF 2 SECONDS OR LESS		FOR MOTORS WITH AN ACCELERATION TIME OF 5 SECONDS OR LESS		FOR MOTORS WITH AN ACCELERATION TIME OF 8 SECONDS OR LESS		
MIN. F.L.A. (1)	MAX F.L.A. (3)	MIN. F.L.A. (1)	MAX F.L.A. (3)	MIN F.L.A. (2)	MAX F.L.A. (3)	
0.2	0.2	0.2	0.2	0.2	0.2	3/10
0.3	0.4	0.3	0.4	0.3	0.3	½
0.4	0.6	0.4	0.5	0.4	0.5	8/10
0.5	0.7	0.5	0.6	0.5	0.6	1
0.6	1.0	0.6	0.9	0.6	0.8	1¼
0.8	1.1	0.8	1.0	0.7	0.9	1½
0.9	1.3	0.9	1.1	0.8	1.0	1 8/10
1.1	1.4	1.1	1.2	0.9	1.1	2
1.2	2.1	1.2	2.1	1.2	1.8	2½
1.5	2.6	1.5	2.6	1.4	2.3	3
1.8	3.0	1.8	3.0	1.6	2.6	3½
2.1	3.4	2.1	3.2	1.8	2.8	4
2.3	3.9	2.3	3.3	2.0	2.8	4½
2.6	4.3	2.6	3.4	2.3	2.8	5
2.9	4.8	2.9	3.7	2.5	3.1	5 6/10
3.3	5.2	3.3	4.0	2.7	3.4	6
3.5	5.4	3.5	4.1	2.8	3.5	6¼
3.6	5.7	3.6	4.2	3.2	3.7	7
4.1	5.8	4.1	4.3	3.4	3.8	7½
4.3	6.2	4.3	4.6	3.6	4.2	8
4.6	6.9	4.6	5.2	4.0	4.5	9
5.2	7.7	5.2	5.8	4.5	4.9	10
5.8	8.9	5.8	6.6	5.4	5.5	12
6.9	10.0	6.9	7.7	6.7	6.7	15
8.9	13.5	8.9	10.0	6.8	9.0	20
11.5	15.8	11.2 (2)	11.8	9.0	11.0	25
14.3	17.8	13.4 (2)	13.4	10.0	15.0	30
20.7	23.3	16.1	17.9	15.6	15.9	35
23.7	26.7	18.4	20.5	17.8	18.2	40
26.6	30.0	20.7	23.1	20.0	20.4	45
30.0	33.3	23.0	25.6	22.3	22.7	50
35.5	40.0	27.6	30.1	26.7	27.3	60

1 Based on NEC requirement limiting the rating of time-delay fuses to 175% of motor F.L.A., or next higher rating.
2 Based on NEC exception permitting fuse rating to be increased, but not to exceed, 225% motor F.L.A., however per NEC Article 430.52 Class CC (0-30) fuses can now be sized up to 400% of motor F.L.A.
3 Based on Littelfuse CCMR time-delay characteristics.

NOTE: These values were calculated for motors with Locked Rotor Current (LRA), not exceeding the following values:

MOTOR F.L.A.	*LRA
0.00 – 1.00	850%
1.01 – 2.00	750%
2.01 – 10.0	650%
10.1 – 17.8	600%

*If motor LRA varies from these values, contact Littelfuse.

ALPHANUMERIC INDEX

Product Name	Page Number
Alarm Monitoring	172
Arc-Flash	161, 202
ATO Series	38
BLF Series	32
BLN Series	32
BLS Series	33
Box Cover Units	186
Bolt-Down Fuses	63
Bus Bar Series	110
C6200	170
Cable Limiters	65
CCMR Series	29
Class CC	29-31, 99-100
Class CD	29-31, 99-100
Class G	28, 97
Class H	22, 86-91
Class J	23-25, 82-85
Class K5	21, 86-91
Class L	9-13
Class RK1	14-16, 86-91
Class RK5	17-20, 86-91
Class T	26-27, 92-96
CNL Series	62
CNN / CNN/E Series	62
Controls	147
Coordination Panels	140
CYHP001	183
Cylindrical Fuses	183
D0900	161
Definitions	204
Distribution Blocks	122
E5000	171
E7800	168
EL731	154
Electrical Safety	202
Electronic Fuses	35-37
Engine Controls/Diagnosis	171
EngineEye	171
E-Rated Fuses	44-48
European Fuses	180
FBDIN1	102
Feeder Protection	160
FLA Series	33
FlexGen	170
FLM Series	32
FLNR Series	18
FLNR_ID Series	18
FLQ Series	32
FLSR Series	18
FLSR_ID Series	18
FLU Series	33
Fork-Lift Fuses	62
FPS	160
FPU-32	160

Product Name	Page Number
Fuse Blocks, Fuse Holders	80-121
Fuse Classifications	200
Fuseology	189
Fuse Reducers	185
G2000	162
G3000	162
G3300	163
Generator Protection/Control	162-170
GDB Series	128
GFP	114
Ground-Fault Protection	152-154
H4000	173
HAZGARD™	62
IDSR Series	17
Industrial Shock-Block	161
In-Line Fuse Holders	131
International Products	180
JCASE Series	39
JLLN Series	26
JLLS Series	26
JLS Series	24
JTD/JTD_ID Series	23
KLC Series	66
KLDR Series	30
KLK Series	32
KLKD Series	32
KLKR Series	30
KLLU Series	10
KLNR Series	15
KLPC Series	9
KLQ Series	32
KLSR Series	15
L15S Series	66
L17T Series	52
L25S Series	66
L50S Series	66
L60030C, L60030M Series	99
L60030MPCB	101
L60S Series	66
L70S Series	66
LA15QS Series	68
LA30QS Series	69
LA50QS Series	70
LA60Q Series	71
LA70QS Series	71
LA100P Series	73
LA070URD Series	74
LA130URD Series	74
LCC Series	114
LCP Series	140
LD Series	122
LDC Series	11
LEB Series	132
LEC Series	132

Product Name	Page Number
LET Series	132
LEX Series	132
LEX YY Series	136
LEXT YY Series	132
LEY Series	132
LFC600	99
LF Series Covers	103
LFCL Series	165
LFFB003	116
LFG480, LFG600 Series	97
LFH250, LFH600 Series	86
LFJ 1000V Series	104
LFJ600 Series	83
LFPHV	112
LFPSJ	113
LFR250, LFR600 Series	86
LFT300, LFT600 Series	92
LGR Series	64
LHFB	116
LHR Series	64
Live Parts	50
LKN Series	22
LKS Series	22
LLNRK Series	14
LLSRK/ LLSRK_ID Series	14
LMF Series	64
LPBC Series	122
LPFP Series	114
LPHV Series	109
LPMP Series	144
LPS	142
LPSC Series	108
LPSM Series	108
LRU Series	185
LS Series	122
LSCR Series	120
LSCY	186
LSKA	186
LSOU	186
LSOW	186
LSOX	186
LSOY	186
LSOY-B	186
LSRU	186
LSRW	186
LSRX	186
LSRY	186
LSSU	186
LSSW	186
LSSX	186
LSSY	186
LSTY	186
LTFD Series	56
LVSP Series	179

© 2012 Littelfuse POWR-GARD® Products Catalog

ALPHANUMERIC INDEX

Product Name	Page Number
M1000	172
M2000	171
M2500	171
M3000	172
M4200	172
M4500	173
M4600	173
M4700	173
M8100	169
MAXI Series	38
Medium Voltage	40-50
MEGA Series	63
MFP	114
Midget Fuses	32-33
MINI Series	38
Motor Protection	158-159
MOV	177
MPS	159
MPU-32	159
MROplus	3
NH Fuse Links	181
NLKP Series	21
NLN Series	21
NLS Series	21
Overvoltage Products	177
Panel Mount Adapters	175
PGN-1000	157
PGN-3000	157
PGR-3100	152
PGR-3200	152
PGR-4300	162
PGR-6100	158
PGR-6130	158
PGR-6150	158
PGR-6800	160
PGR-8800	161
Plug Fuses	63
POWR-PRO® Fuses	3
Pre-Engineered Solutions	138-146
Protection Relays	147
Potential Transformer	49
Pump Protection	160
Quick-LINK Series	107
Resistance Grounding	156-157
RLN Series	22
RLS Series	22
R-Rated Fuses	42
S6000	170
SE-105	155
SE-134C	155
SE-145	155
SE-325	156
SE-330	156
SE-330AU	156

Product Name	Page Number
SE-502	157
SE-601	152
SE-701	153
SE-703	153
SE-704	153
Semiconductor Fuses	66
Sigma	170
SLC Series	28
Solar Fuses	58-61
SPF Series	60
SPFJ Series	61
SPL001	103
Splicer Blocks	122
Stud-Mounted Fuse Blocks	120
Suppression Products	177
T2000	163
T2100	163
T2200	164
T2300	164
T2400	164
T2500	165
T2600	167
T2700	165
T2800	154
T2900	165
T3000	166
T3100	166
T3200	154
T3300	166
T4500	167
T4800	167
T4900	168
T5000	168
T7900	169
T8400	169
Technical Information	188
Telecom Fuses	51-55
TLN Series	53
TLO Series	63
TLS Series	54
TMOV	177
TOO Series	63
Trailing Cable Protection	155
Up-LINK™ Series	107
Varistors	177
WPB Series	132
150322	131
1LFS, 1LS Series	121
215 Series	37
216 Series	37
217 Series	37
218 Series	37
224 Series	36
225 Series	36

Product Name	Page Number
229 Series	36
230 Series	36
235 Series	37
239 Series	37
251 Series	35
257 Series	38
273 Series	35
297 Series	38
299 Series	38
312 Series	36
313 Series	36
314 Series	36
315 Series	36
318 Series	36
324 Series	36
325 Series	36
326 Series	36
342 Series	118
345 Series	119
354 Series	115
451 Series	35
477 Series	35
481 Series	50
505 Series	35
571 Series	117
572 Series	117
70 Series	55

CONDENSED CROSS REFERENCE

Power (Electrical) and Electronic Fuses

This cross reference covers the most popular fuses for which there is a similar Littelfuse standard item. Furnished for your convenience, it is meant to serve as a guide only for product selection. We suggest you check all applicable specifications before making substitutions. For special applications, more complete information, and for fuse block and medium voltage fuse cross referencing, visit **www.littelfuse.com** or call 1-800-TEC-FUSE (1-800-832-3873).

COMPETITION	LITTELFUSE	COMPETITION	LITTELFUSE	COMPETITION	LITTELFUSE	COMPETITION	LITTELFUSE
10KOTN	**NLN**	CNM	**FLM**	KAB	**L25S**	NOS	**NLS**
10KOTS	**NLS**	CNQ	**FLQ**	KAC	**KLC**	NRN	**NLN**
50KOTN	**NLN**	CRN-R	**FLNR_ID (note 3)**	KBH	**L50S**	NRN (15-60A)	**NLKP**
50KOTS	**NLS**	CRS-R	**FLSR_ID**	KLM	**KLKD**	NRS	**NLS**
A	**251**	CSF13X	**L15S**	KLMR	**CCMR**	OT	**NLN**
A013F	**L15S**	CSF25X	**L25S (AC only)**	KLU	**KLLU or KLPC**	OTM	**BLF or BLN**
A015F	**L15S**	CSF50P	**L50S**	KN	**KLNR**	OTN	**NLN**
A015R	**L15S**	CSF60C	**KLC (AC only)**	KON	**NLN**	OTS	**NLS**
A025F	**L25S**	CSF60X	**L60S (AC only)**	KOS	**NLS**	REN	**RLN**
A050F	**L50S**	CSF70P	**L70S**	KRPC (SP)	**KLPC**	RES	**RLS**
A060F	**L60S**	CTN-R	**KLNR**	KRPC-L	**KLPC**	RF	**RLN**
A060URL	**KLK**	CTS-R	**KLSR**	KS	**KLSR**	RFA	**L15S**
A070F	**L70S**	EBS	**BLS**	KTK	**KLK**	RFC	**KLC**
A13X	**L15S**	ECNR	**FLNR_ID (note 3)**	KTKR	**KLKR**	RFL (750V)	**L70S (700 V)**
A25X	**L25S (AC only)**	ECSR	**FLSR_ID**	KTNR	**KLNR**	RFN (Ferraz)	**RLN**
A2D-R	**LLNRK**	ELN	**LKN**	KTSR	**KLSR**	RFS (Ferraz)	**RLS**
A2K-R	**KLNR**	ELS	**LKS**	KTU	**KLPC**	RFV	**L50S**
A3T	**JLLN**	ERN	**RLN**	L	**KLLU or KLPC**	RHN	**KLNR**
A4BQ	**KLPC**	ERS	**RLS**	LCL	**KLPC or KLLU**	RHS	**KLSR**
A4BT	**KLLU or KLPC**	FNA	**FLA**	LCU	**KLPC or KLLU**	RLN (Ferraz)	**LKN**
A4BY	**KLPC or KLLU**	FNB	**235**	LENRK	**LLNRK**	RLS (Ferraz)	**LKS**
A4J	**JLS**	FNM	**FLM**	LESRK	**LLSRK_ID**	S	**SOO**
A50P (type 1 & 4)	**L50S**	FNQ	**FLQ**	LKN	**LKN**	SA	**SAO**
A60X	**L60S**	FNQ-R	**KLDR**	LKS	**LKS**	SC	**SLC**
A6D-R	**LLSRK_ID (note 4)**	FRN-R	**FLNR_ID (note 3)**	LKU	**KLLU**	SCLR	**KLSR**
A6K-R	**KLSR**	FRS-R	**FLSR_ID**	LONRK	**LLNRK**	SEC	**SLC**
A6T	**JLLS**	FWA (note 2)	**L15S**	LOSRK	**LLSRK_ID**	SF13X	**L15S**
A70P	**L70S**	FWH (note 2)	**L50S**	LPCC	**CCMR**	SF25X	**L25S**
ACK	**CCK**	FWP (note 1)	**L70S**	LPJ (SP)	**JTD_ID**	SF50P	**L50S**
AG	**SLC**	FWX (note 1)	**L25S**	LPNRK (SP)	**LLNRK**	SF60X	**L60S**
AGA	**AGA**	GDA	**216**	LPSRK (SP)	**LLSRK_ID (note 4)**	SF70P	**L70S**
AGC	**312**	GDB	**217**	MCL	**KLK**	SFE	**SFE**
AGU (1-30A)	**BLN**	GDC	**218**	MDA	**326**	SL	**SLO**
AGW	**AGW**	GDL	**313**	MDL	**313**	T	**TOO**
AJT	**JTD_ID**	GEB	**LEB**	MDQ	**313**	TJN	**JLLN**
ANL	**CNL**	GEBN	**LET**	MDV	**315**	TJS	**JLLS**
ANN	**CNN**	GFA	**251**	MDX	**313**	TL	**TLO**
ATC	**ATO (257)**	GFN	**FLA**	MEN	**FLM**	TR	**FLNR_ID (note 3)**
AT-DE	**FLNR_ID (note 3)**	GGC	**312**	MEQ	**FLQ**	TRM	**FLM**
ATDR	**CCMR**	GGM	**235**	MID	**FLA**	TRN-R	**FLNR_ID (note 3)**
ATM (Ferraz)	**KLKD**	GLR	**LGR**	MOF	**BLN**	TRS	**FLSR_ID**
ATMR	**KLKR**	GMT	**481**	MOL	**BLF**	TRS-R	**FLSR_ID (note 4)**
ATQ	**FLQ**	HCLR	**KLKR**	MTH	**312**	XL25X	**L25S**
ATQR	**KLDR**	HCTR	**KLDR**	NCLR	**KLNR**	XL50F	**L50S (note 1)**
AX	**481**	HEB	**LEB**	NON	**NLN**	XL70F	**L70S (note 1)**
BAF	**BLF**	HET	**LET**				
BAN	**BLN**	HLR	**LHR**				
BBS	**BLS**	J	**JLS**				
CJ	**JLS**	JDL	**JTD_ID**				
CJS	**JLS**	JFL	**JLS**				
CLF	**KLPC or KLLU**	JHC	**JTD_ID**				
CLL	**KLLU or KLPC**	JJN	**JLLN**				
CLU	**KLLU or KLPC**	JJS	**JLLS**				
CM	**BLF**	JKS	**JLS**				
CMF	**BLN**	KAA	**L15S**				

1) Check specific mounting dimensions before substituting.
2) Check fuse characteristics and mounting dimensions for specific application before substituting.
3) For $^{1}/_{10}$ - 30 amperes, order non-indicating FLNR series fuses.
4) Verify voltage for DC applications.

Remember a fuse may be used in circuits where the fuse's voltage rating is equal to or greater than the circuit voltage, unless otherwise stated on the fuse. For example, the FLSR_ID indicating fuse has a voltage rating of 75-600 volts. This fuse can be used on 600 volts, 480 volts, 250 volts, 125 volts, or 75 volts. Never use a fuse in a circuit having a higher rated voltage than the fuse.

© 2012 Littelfuse POWR-GARD® Products Catalog

Additional Resources

1-800-TEC-FUSE

For additional questions, call the Littelfuse® Technical Support and Engineering Service Group at 1-800-TEC-FUSE (1-800-832-3873) or visit us online at **www.littelfuse.com**

Safety By Design

Learn about our products designed specifically to increase safety. Find training videos, white papers and product information for designing in safety. Visit: **www.littlelfuse.com/safetybydesign**

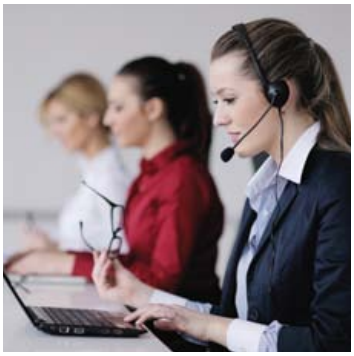

White Papers and Additional Technical Information

An expanded Technical Application Guide, White Papers, and a library of technical information is available online at **www.littelfuse.com/technicalcenter**. Littelfuse POWR-GARD® can help you address application and circuit protection challenges while achieving regulatory compliance.

Motor Protection

Effective motor protection is critical in today's highly automated industrial facilities. POWR-GARD fuses and protection relays provide optimum protection for motors in main, feeder, and branch circuits.

SCCR

The NEC® requires Industrial Control Panels be labeled with their Short-Circuit Current Rating so users and inspectors can compare their equipment to available fault currents to avoid potential hazards.

Transformer Protection

POWR-GARD fuses provide optimal overcurrent protection for both the primary and secondary of control transformers and other regular transformers above and below 600 volts.

Arc-Flash Protection

Arc-Flash protection relays are intelligent controllers that safeguard equipment and personnel to prevent damage, downtime or injury due to arc flash.

Medium Voltage Fuse Protection

POWR-GARD medium voltage fuses provide short-circuit protection for motors and transformers rated 2,400 to 38,000 volts AC.

Overvoltage Suppression Basics

Overvoltage conditions are an increasing concern in the electrical industry. Littelfuse's broadest range of circuit protection technologies protect against voltage transients in a wide range of applications.

Littelfuse® POWR-GARD® products and technical resources enhance the productivity and safety of electrical systems. POWR-GARD offers current-limiting fuses to decrease Arc-Flash exposure, fuse holders and fuse covers to reduce incidental contact, protection relays to safeguard equipment and safety resources to improve safety.

- **Fuses and Fuse Holders**
- **Solar-Rated Products**
- **Relays and Controls**
- **Remote Indication**
- **Safety Resources**

WWW.LITTELFUSE.COM

For 35 years Littelfuse POWR-GARD has helped OEM engineers, consulting engineers and end users select the right products to protect critical electrical equipment—supported by our full line of product catalogs and reference materials.

Relays & Controls Catalog — The comprehensive line of electronic and microprocessor-based protections relays and controls safeguard equipment and personnel to prevent expensive damage, downtime or injury due to electrical faults.

Up-LINK™ Product Brochure — Up-LINK is a patented remote indication technology, incorporated in a growing number of fuse holders and other products that improve productivity by providing necessary information to monitoring sites.

Varistor Catalog — Littelfuse offers industrial Metal Oxide Varistors (MOVs) to protect against transient voltage surges.

OEM Design Brochure — Design engineers can work with Littelfuse POWR-GARD to add value to their products with standard or custom circuit protection solutions.

To view all Littelfuse product catalogs, visit our web site at **www.littelfuse.com/catalogs**

Littelfuse POWR-GARD is in the App Store!

Our free Littelfuse Catalogs and Literature App keeps our products and technical resources at your finger tips, wherever you are. Find products and technical specifications you need, quickly and easily!

©2012 Littelfuse, Inc. Printed in USA.
Specifications, descriptions and illustrative material in this literature are as accurate as known at the time of publication, but are subject to changes without notice. Visit **www.littelfuse.com** for the most up-to-date technical information.

FORM NO. PF101N
Revision D

OCEAN CHIPS
Океан Электроники
Поставка электронных компонентов

Компания «Океан Электроники» предлагает заключение долгосрочных отношений при поставках импортных электронных компонентов на взаимовыгодных условиях!

Наши преимущества:

- Поставка оригинальных импортных электронных компонентов напрямую с производств Америки, Европы и Азии, а так же с крупнейших складов мира;
- Широкая линейка поставок активных и пассивных импортных электронных компонентов (более 30 млн. наименований);
- Поставка сложных, дефицитных, либо снятых с производства позиций;
- Оперативные сроки поставки под заказ (от 5 рабочих дней);
- Экспресс доставка в любую точку России;
- Помощь Конструкторского Отдела и консультации квалифицированных инженеров;
- Техническая поддержка проекта, помощь в подборе аналогов, поставка прототипов;
- Поставка электронных компонентов под контролем ВП;
- Система менеджмента качества сертифицирована по Международному стандарту ISO 9001;
- При необходимости вся продукция военного и аэрокосмического назначения проходит испытания и сертификацию в лаборатории (по согласованию с заказчиком);
- Поставка специализированных компонентов военного и аэрокосмического уровня качества (Xilinx, Altera, Analog Devices, Intersil, Interpoint, Microsemi, Actel, Aeroflex, Peregrine, VPT, Syfer, Eurofarad, Texas Instruments, MS Kennedy, Miteq, Cobham, E2V, MA-COM, Hittite, Mini-Circuits, General Dynamics и др.);

Компания «Океан Электроники» является официальным дистрибьютором и эксклюзивным представителем в России одного из крупнейших производителей разъемов военного и аэрокосмического назначения **«JONHON»**, а так же официальным дистрибьютором и эксклюзивным представителем в России производителя высокотехнологичных и надежных решений для передачи СВЧ сигналов **«FORSTAR»**.

AVIC JONHON

«JONHON» (основан в 1970 г.)

Разъемы специального, военного и аэрокосмического назначения:

(Применяются в военной, авиационной, аэрокосмической, морской, железнодорожной, горно- и нефтедобывающей отраслях промышленности)

«FORSTAR» (основан в 1998 г.)

ВЧ соединители, коаксиальные кабели, кабельные сборки и микроволновые компоненты:

(Применяются в телекоммуникациях гражданского и специального назначения, в средствах связи, РЛС, а так же военной, авиационной и аэрокосмической отраслях промышленности).

FORSTAR®

Телефон: 8 (812) 309-75-97 (многоканальный)
Факс: 8 (812) 320-03-32
Электронная почта: ocean@oceanchips.ru
Web: http://oceanchips.ru/
Адрес: 198099, г. Санкт-Петербург, ул. Калинина, д. 2, корп. 4, лит. А