23A512/23LC512

512Kbit SPI Serial SRAM with SDI and SQI Interface

Device Selection Table

Part Number	Vcc Range	Dual I/O (SDI)	Quad I/O (SQI)	Max. Clock Frequency	Packages
23A512	1.7-2.2V	Yes	Yes	20 MHz	SN, ST, P
23LC512	2.5-5.5V	Yes	Yes	20 MHz	SN, ST, P

Features:

- SPI-Compatible Bus Interface:
  - 20 MHz Clock rate
  - SPI/SDI/SQI mode
- Low-Power CMOS Technology:
  - Read Current: 3 mA at 5.5V, 20 MHz
  - Standby Current: 4 µA at +85°C
- Unlimited Read and Write Cycles
- Zero Write Time
- 64K x 8-bit Organization:
  - 32-byte page
- Byte, Page and Sequential mode for Reads and Writes
- High Reliability
- Temperature Range Supported:
  - Industrial (I): -40°C to +85°C
- Pb-Free and RoHS Compliant, Halogen Free
- 8-Lead SOIC, TSSOP and PDIP Packages

Pin Function Table

Name	Function
$\overline{CS}$	Chip Select Input
SO/SIO1	Serial Output/SDI/SQI Pin
SIO2	SQI Pin
Vss	Ground
SI/SIO0	Serial Input/SDI/SQI Pin
SCK	Serial Clock
$\overline{HOLD}$/SIO3	Hold/SQI Pin
Vcc	Power Supply

Description:

The Microchip Technology Inc. 23A512/23LC512 are 512Kbit Serial SRAM devices. The memory is accessed via a simple Serial Peripheral Interface (SPI) compatible serial bus. The bus signals required are a clock input (SCK) plus separate data in (SI) and data out (SO) lines. Access to the device is controlled through a Chip Select ($\overline{CS}$) input. Additionally, SDI (Serial Dual Interface) and SQI (Serial Quad Interface) is supported if your application needs faster data rates.

This device also supports unlimited reads and writes to the memory array.

The 23A512/23LC512 is available in standard packages including 8-lead SOIC, PDIP and advanced 8-lead TSSOP.

Package Types (not to scale)

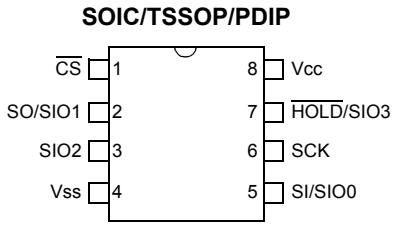

1.0 ELECTRICAL CHARACTERISTICS

Absolute Maximum Ratings (†)

V_{CC} 6.5V

All inputs and outputs w.r.t. V_{SS} ..... -0.3V to V_{CC} +0.3V

Storage temperature ..... -65°C to +150°C

Ambient temperature under bias ..... -40°C to +85°C

† NOTICE: Stresses above those listed under "Absolute Maximum Ratings" may cause permanent damage to the device. This is a stress rating only and functional operation of the device at those or any other conditions above those indicated in the operational listings of this specification is not implied. Exposure to maximum rating conditions for an extended period of time may affect device reliability.

TABLE 1-1: DC CHARACTERISTICS

DC CHARACTERISTICS			Industrial (I): T_A = -40°C to +85°C				
Param. No.	**Sym.**	**Characteristic**	**Min.**	**Typ.(1)**	**Max.**	**Units**	**Test Conditions**
D001	V_{CC}	Supply voltage	1.7 2.5	—	2.2 5.5	V	23A512 23LC512
D002	V_{IH}	High-level input voltage	.7 V_{CC}	—	V_{CC} +0.3	V	
D003	V_{IL}	Low-level input voltage	-0.3	—	0.2xV_{CC} 0.10xV_{CC}	V	23A512 23LC512
D004	V_{OL}	Low-level output voltage	—	—	0.2	V	I_{OL} = 1 mA
D005	V_{OH}	High-level output voltage	V_{CC} -0.5	—	—	V	I_{OH} = -400 μA
D006	I_{LI}	Input leakage current	—	—	±1	μA	$\overline{CS}$ = V_{CC}, V_{IN} = V_{SS} or V_{CC}
D007	I_{LO}	Output leakage current	—	—	±1	μA	$\overline{CS}$ = V_{CC}, V_{OUT} = V_{SS} or V_{CC}
D008	I_{CC} Read	Operating current	— —	1 3	10 10	mA mA	F_{CLK} = 20 MHz; SO = O, 2.2V F_{CLK} = 20 MHz; SO = O, 5.5V
D009	I_{CCS}	Standby current	— —	1 4	4 10	μA μA	$\overline{CS}$ = V_{CC} = 2.2V, Inputs tied to V_{CC} or V_{SS} $\overline{CS}$ = V_{CC} = 5.5V, Inputs tied to V_{CC} or V_{SS}
D010	C_{INT}	Input capacitance	—	—	7	pF	V_{CC} = 0V, f = 1 MHz, Ta = 25°C (**Note 1**)
D011	V_{DR}	RAM data retention voltage (2)	—	1.0	—	V	

Note 1: This parameter is periodically sampled and not 100% tested. Typical measurements taken at room temperature (25°C).

2: This is the limit to which V_{DD} can be lowered without losing RAM data. This parameter is periodically sampled and not 100% tested.

 © 2012 Microchip Technology Inc.

TABLE 1-2: AC CHARACTERISTICS

AC CHARACTERISTICS			Industrial (I): TA = -40°C to +85°C			
Param. No.	**Sym.**	**Characteristic**	**Min.**	**Max.**	**Units**	**Test Conditions**
1	FCLK	Clock frequency	—	20	MHz	
2	TCSS	$\overline{CS}$ setup time	25	—	ns	
3	TCSH	$\overline{CS}$ hold time	50	—	ns	
4	TCSD	$\overline{CS}$ disable time	25	—	ns	
5	Tsu	Data setup time	10	—	ns	
6	THD	Data hold time	10	—	ns	
7	TR	CLK rise time	—	20	ns	**Note 1**
8	TF	CLK fall time	—	20	ns	**Note 1**
9	THI	Clock high time	25	—	ns	
10	TLO	Clock low time	25	—	ns	
11	TCLD	Clock delay time	25	—	ns	
12	TV	Output valid from clock low	—	25	ns	
13	THO	Output hold time	0	—	ns	**Note 1**
14	TDIS	Output disable time	—	20	ns	
15	THS	$\overline{HOLD}$ setup time	10	—	ns	—
16	THH	$\overline{HOLD}$ hold time	10	—	ns	—
17	THZ	$\overline{HOLD}$ low to output High-Z	10	—	ns	—
18	THV	$\overline{HOLD}$ high to output valid	—	50	ns	—

Note 1: This parameter is periodically sampled and not 100% tested.

TABLE 1-3: AC TEST CONDITIONS

AC Waveform:	
Input pulse level	0.1 VCC to 0.9 VCC
Input rise/fall time	5 ns
Operating temperature	-40°C to +85°C
CL = 30 pF	—
Timing Measurement Reference Level:	
Input	0.5 VCC
Output	0.5 VCC

FIGURE 1-1: HOLD TIMING

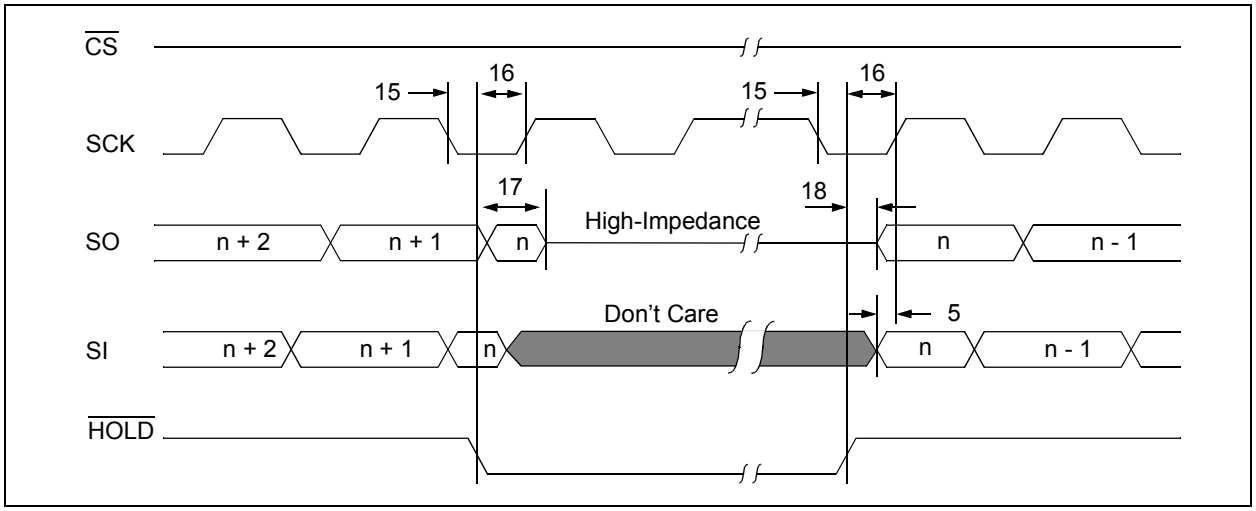

FIGURE 1-2: SERIAL INPUT TIMING (SPI MODE)

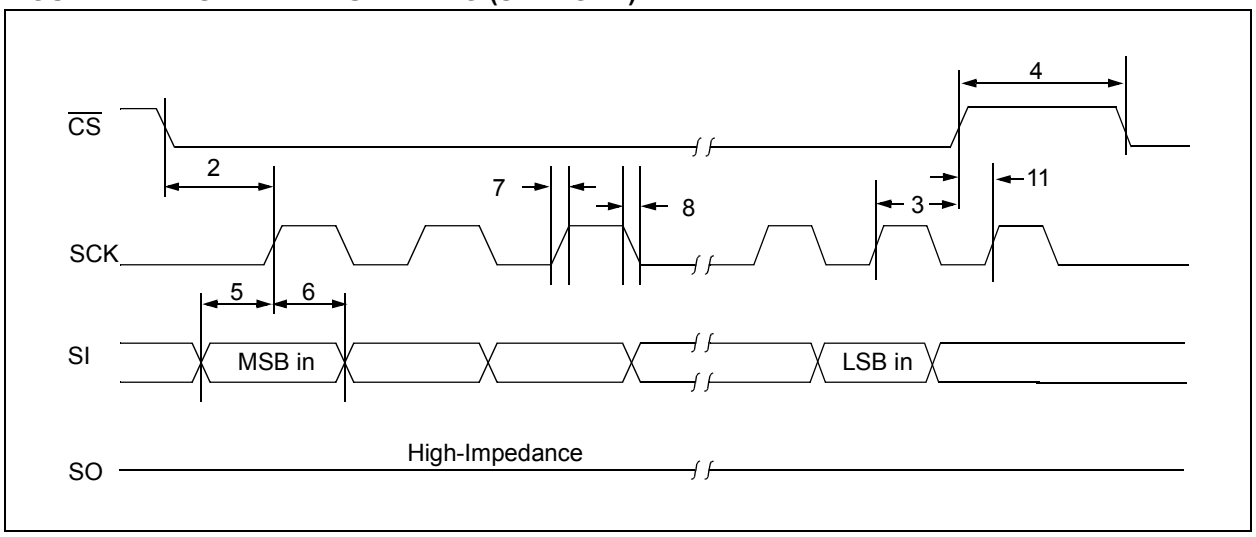

FIGURE 1-3: SERIAL OUTPUT TIMING (SPI MODE)

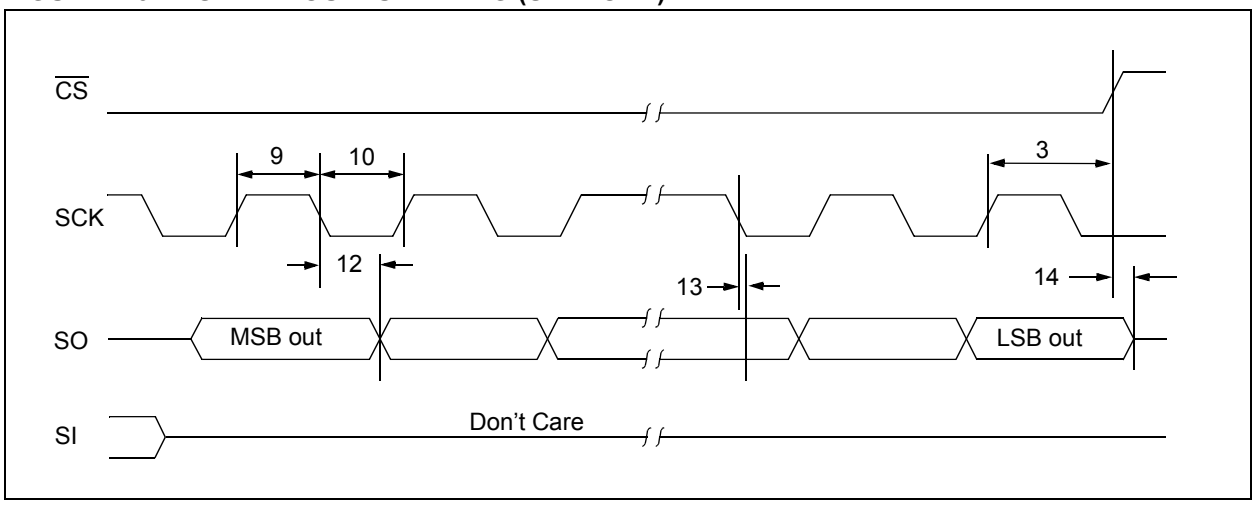

 © 2012 Microchip Technology Inc.

2.0 FUNCTIONAL DESCRIPTION

2.1 Principles of Operation

The 23A512/23LC512 is an 512Kbit Serial SRAM designed to interface directly with the Serial Peripheral Interface (SPI) port of many of today's popular microcontroller families, including Microchip's PIC® microcontrollers. It may also interface with microcontrollers that do not have a built-in SPI port by using discrete I/O lines programmed properly in firmware to match the SPI protocol. In addition, the 23A512/23LC512 is also capable of operating in SDI/SQI high speed SPI mode.

The 23A512/23LC512 contains an 8-bit instruction register. The device is accessed via the SI pin, with data being clocked in on the rising edge of SCK. The $\overline{CS}$ pin must be low for the entire operation.

Table 2-1 contains a list of the possible instruction bytes and format for device operation. All instructions, addresses and data are transferred MSB first, LSB last.

2.2 Modes of Operation

The 23x512 has three modes of operation that are selected by setting bits 7 and 6 in the MODE register. The modes of operation are Byte, Page and Burst.

Byte Operation – is selected when bits 7 and 6 in the MODE register are set to `00`. In this mode, the read/write operations are limited to only one byte. The Command followed by the 16-bit address is clocked into the device and the data to/from the device is transferred on the next eight clocks (Figure 2-1, Figure 2-2).

Page Operation – is selected when bits 7 and 6 in the MODE register are set to `10`. The 23x512 has 2048 pages of 32 bytes. In this mode, the read and write operations are limited to within the addressed page (the address is automatically incremented internally). If the data being read or written reaches the page boundary, then the internal address counter will increment to the start of the page (Figure 2-3, Figure 2-4).

Sequential Operation – is selected when bits 7 and 6 in the MODE register are set to `01`. Sequential operation allows the entire array to be written to and read from. The internal address counter is automatically incremented and page boundaries are ignored. When the internal address counter reaches the end of the array, the address counter will roll over to `0x0000` (Figure 2-5, Figure 2-6).

2.3 Read Sequence

The device is selected by pulling $\overline{CS}$ low. The 8-bit `READ` instruction is transmitted to the 23A512/23LC512 followed by the 16-bit address. After the correct `READ` instruction and address are sent, the data stored in the memory at the selected address is shifted out on the SO pin.

If operating in Sequential mode, the data stored in the memory at the next address can be read sequentially by continuing to provide clock pulses. The internal Address Pointer is automatically incremented to the next higher address after each byte of data is shifted out. When the highest address is reached (FFFFh), the address counter rolls over to address 0000h, allowing the read cycle to be continued indefinitely. The read operation is terminated by raising the $\overline{CS}$ pin.

2.4 Write Sequence

Prior to any attempt to write data to the 23A512/23LC512, the device must be selected by bringing $\overline{CS}$ low.

Once the device is selected, the Write command can be started by issuing a `WRITE` instruction, followed by the 16-bit address, and then the data to be written. A write is terminated by the $\overline{CS}$ being brought high.

If operating in Page mode, after the initial data byte is shifted in, additional bytes can be shifted into the device. The Address Pointer is automatically incremented. This operation can continue for the entire page (32 bytes) before data will start to be overwritten.

If operating in Sequential mode, after the initial data byte is shifted in, additional bytes can be clocked into the device. The internal Address Pointer is automatically incremented. When the Address Pointer reaches the highest address (FFFFh), the address counter rolls over to (0000h). This allows the operation to continue indefinitely, however, previous data will be overwritten.

TABLE 2-1: INSTRUCTION SET

Instruction Name	Instruction Format	Hex Code	Description
READ	0000 0011	0x03	Read data from memory array beginning at selected address
WRITE	0000 0010	0x02	Write data to memory array beginning at selected address
EDIO	0011 1011	0x3B	Enter Dual I/O access
EQIO	0011 1000	0x38	Enter Quad I/O access
RSTIO	1111 1111	0xFF	Reset Dual and Quad I/O access
RDMR	0000 0101	0x05	Read Mode Register
WRMR	0000 0001	0x01	Write Mode Register

FIGURE 2-1: BYTE READ SEQUENCE (SPI MODE)

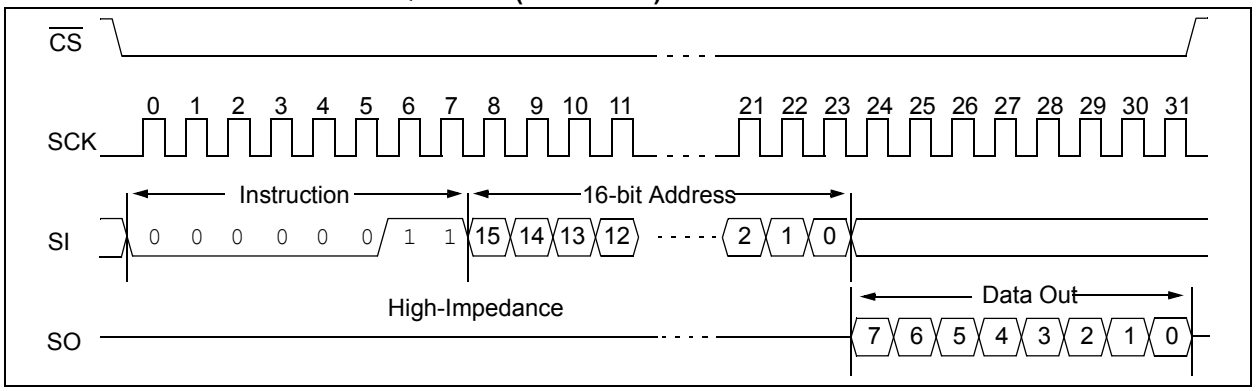

FIGURE 2-2: BYTE WRITE SEQUENCE (SPI MODE)

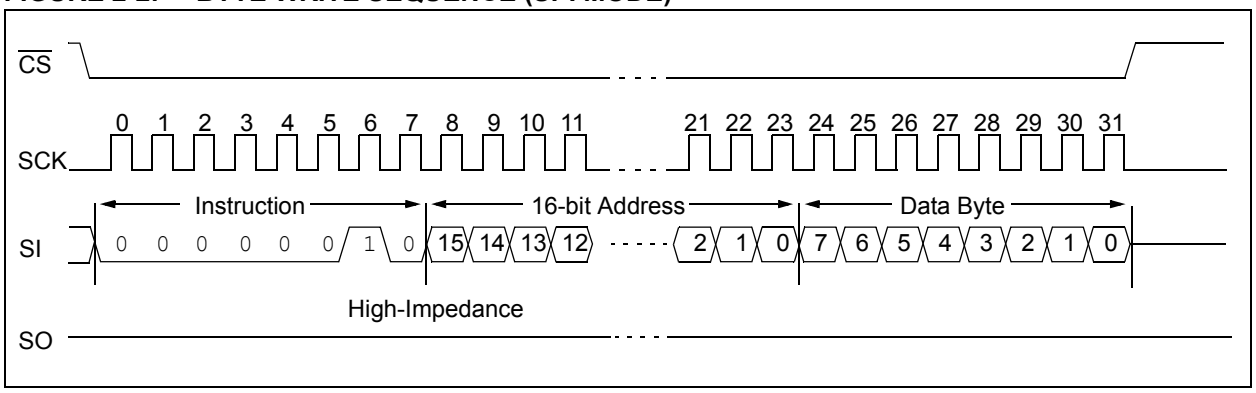

 © 2012 Microchip Technology Inc.

FIGURE 2-3: PAGE READ SEQUENCE (SPI MODE)

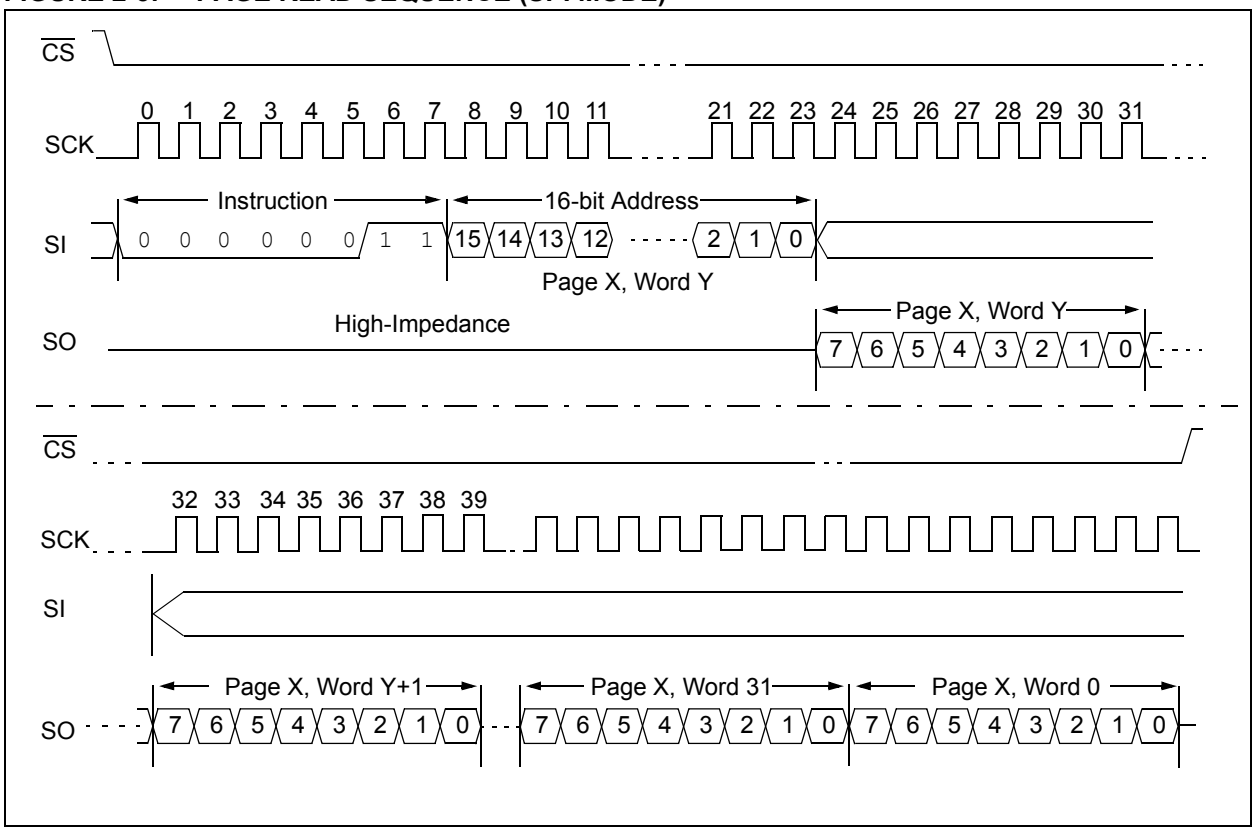

FIGURE 2-4: PAGE WRITE SEQUENCE (SPI MODE)

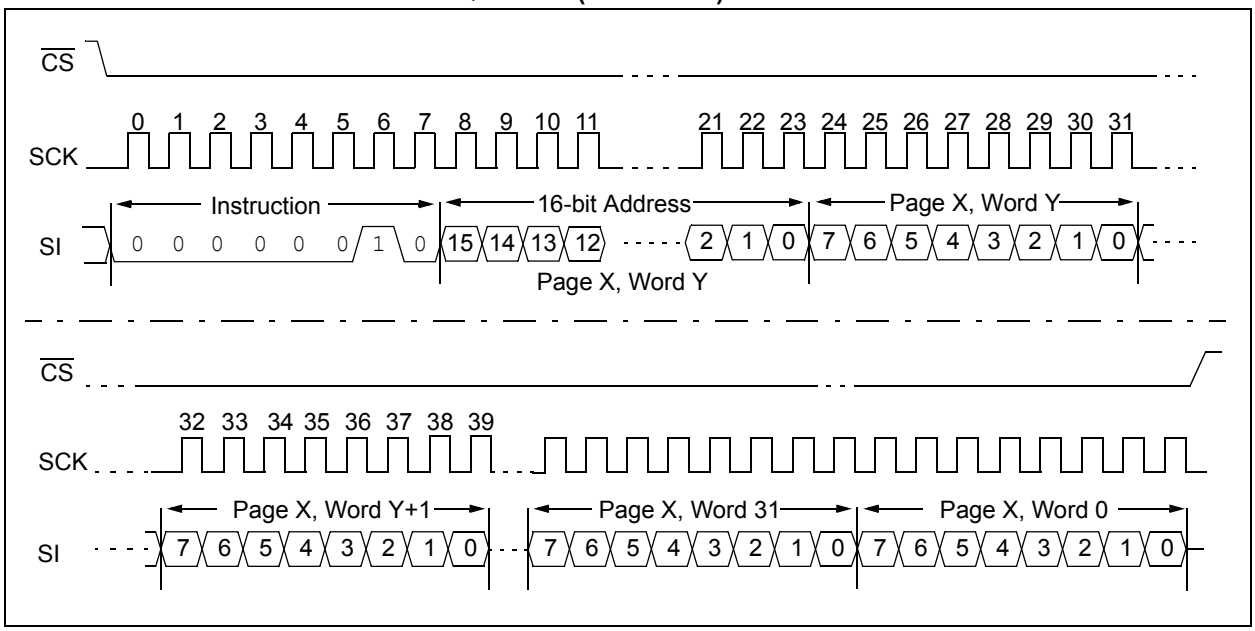

FIGURE 2-5: SEQUENTIAL READ SEQUENCE (SPI MODE)

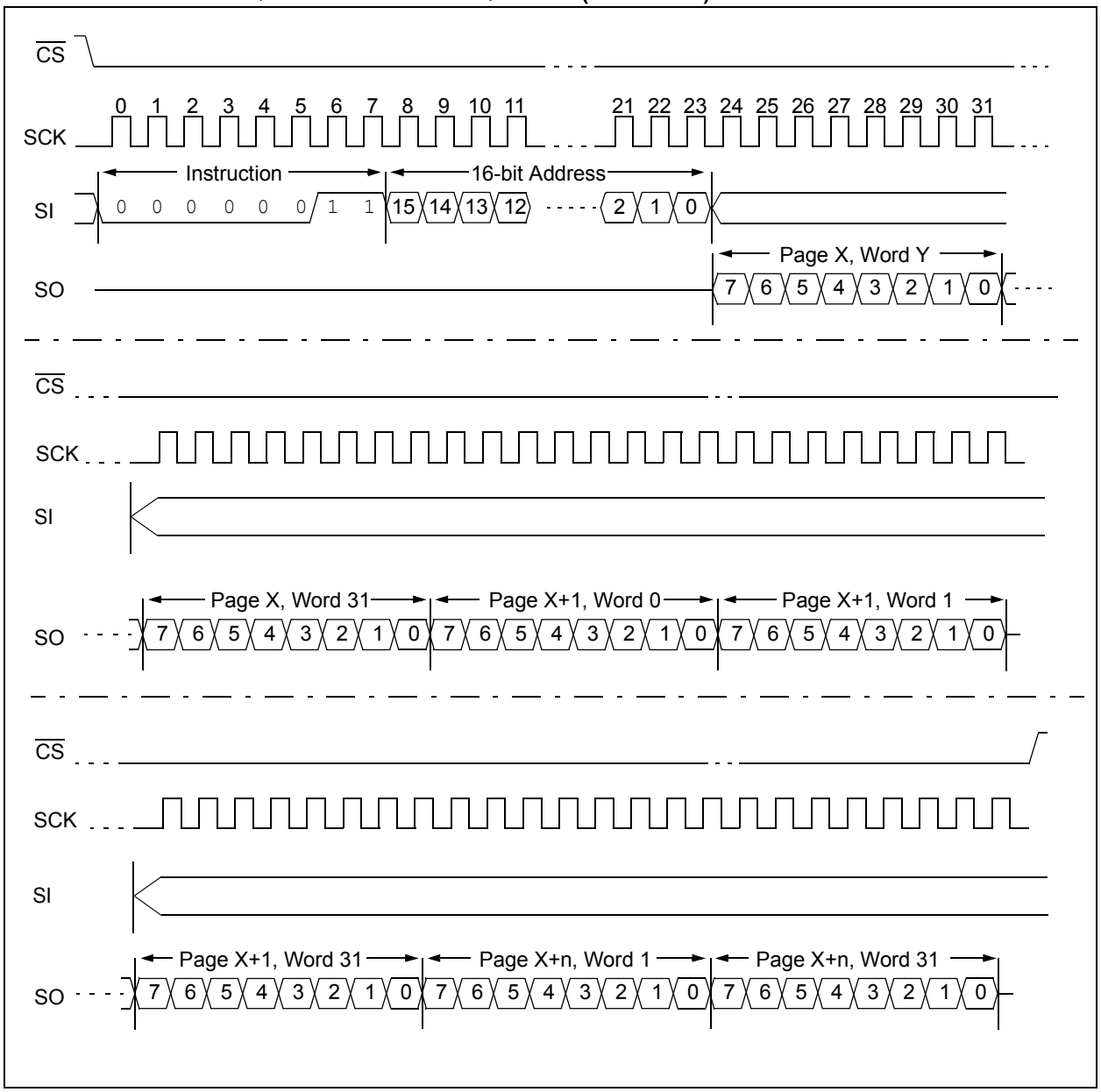

 © 2012 Microchip Technology Inc.

FIGURE 2-6: SEQUENTIAL WRITE SEQUENCE (SPI MODE)

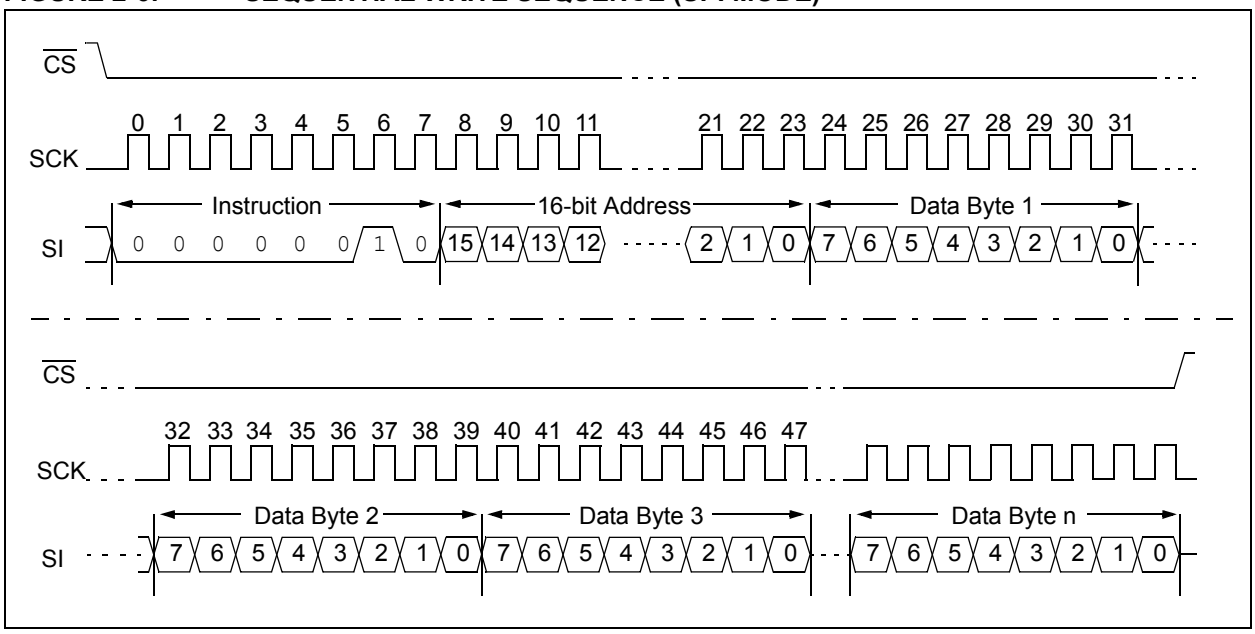

2.5 Read Mode Register Instruction (RDMR)

The Read Mode Register instruction (RDMR) provides access to the MODE register. The MODE register may be read at any time. The MODE register is formatted as follows:

TABLE 2-2: MODE REGISTER

7	6	5	4	3	2	1	0
W/R	W/R	–	–	–	–	–	–
MODE	MODE	0	0	0	0	0	0
W/R = writable/readable							

The mode bits indicate the operating mode of the SRAM. The possible modes of operation are:

0 0 = Byte mode

1 0 = Page mode

0 1 = Sequential mode (default operation)

1 1 = Reserved

Bits 0 through 5 are reserved and should always be set to '0'.

See Figure 2-7 for the RDMR timing sequence.

FIGURE 2-7: READ MODE REGISTER TIMING SEQUENCE (RDMR)

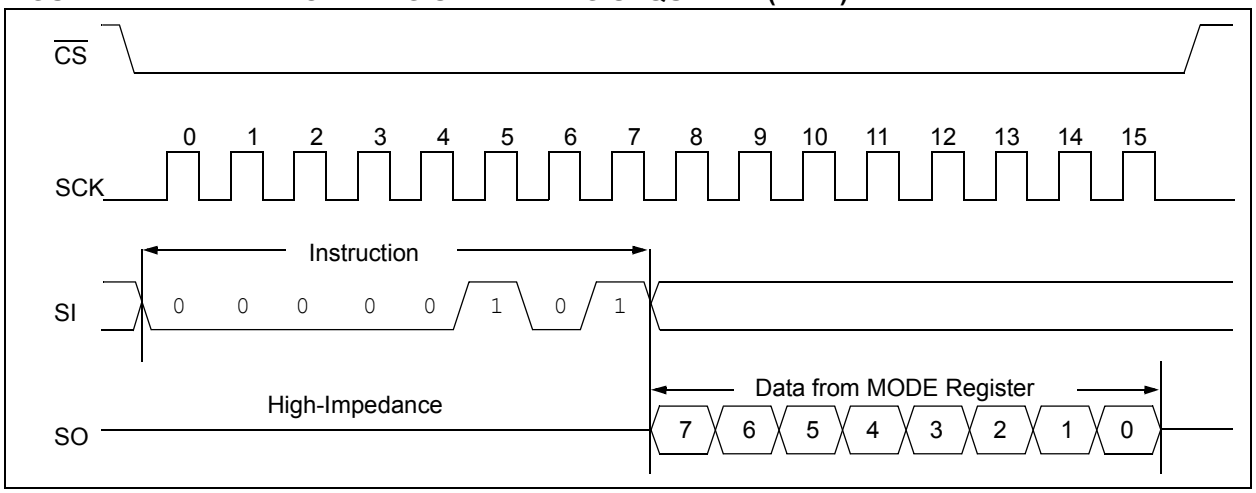

 © 2012 Microchip Technology Inc.

2.6 Write Mode Register Instruction (WRMR)

The Write Mode Register instruction (WRMR) allows the user to write to the bits in the MODE register as shown in Table 2-2. This allows for setting of the Device Operating mode. Several of the bits in the MODE register must be cleared to '0'. See Figure 2-8 for the WRMR timing sequence.

FIGURE 2-8: WRITE MODE REGISTER TIMING SEQUENCE (WRMR)

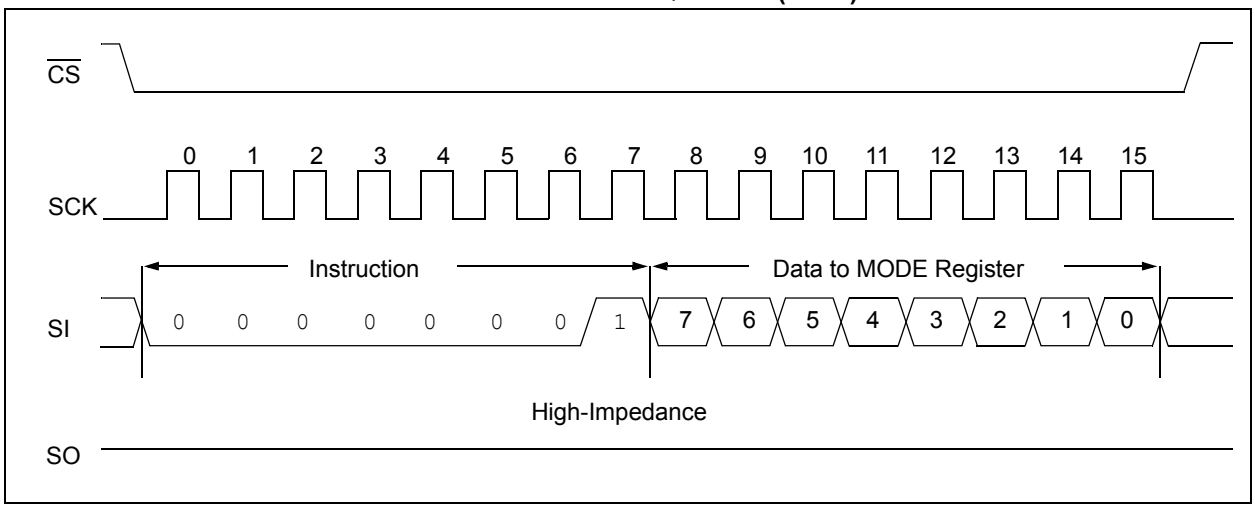

2.7 Power-On State

The 23A512/23LC512 powers on in the following state:

- The device is in low-power Standby mode ($\overline{CS}$ = 1)
- A high-to-low-level transition on $\overline{CS}$ is required to enter active state

3.0 PIN DESCRIPTIONS

The descriptions of the pins are listed in Table 3-1.

TABLE 3-1: PIN FUNCTION TABLE

Name	SOIC/ PDIP TSSOP	Function
$\overline{CS}$	1	Chip Select Input
SO/SIO1	2	Serial Data Output/SDI/SQI Pin
SIO2	3	SQI Pin
VSS	4	Ground
SI/SIO0	5	Serial Data Input/SDI/SQI Pin
SCK	6	Serial Clock Input
$\overline{HOLD}$/SIO3	7	Hold/SQI Pin
VCC	8	Power Supply

3.1 Chip Select ($\overline{CS}$)

A low level on this pin selects the device. A high level deselects the device and forces it into Standby mode. When the device is deselected, SO goes to the high-impedance state, allowing multiple parts to share the same SPI bus. After power-up, a low level on $\overline{CS}$ is required, prior to any sequence being initiated.

3.2 Serial Output (SO)

The SO pin is used to transfer data out of the 23A512/23LC512. During a read cycle, data is shifted out on this pin after the falling edge of the serial clock.

3.3 Serial Input (SI)

The SI pin is used to transfer data into the device. It receives instructions, addresses, and data. Data is latched on the rising edge of the serial clock.

3.4 Serial Dual Interface Pins(SIO0, SIO1)

The SIO0 and SIO1 pins are used for SDI mode of operation. Functionality of these I/O pins is shared with SO and SI.

3.5 Serial Quad Interface Pins (SIO0 – SIO3)

The SIO0 through SIO3 pins are used for SQI mode of operation. Because of the shared functionality of these pins the HOLD feature is not available when using SQI mode.

3.6 Serial Clock (SCK)

The SCK is used to synchronize the communication between a master and the 23A512/23LC512. Instructions, addresses or data present on the SI pin are latched on the rising edge of the clock input, while data on the SO pin is updated after the falling edge of the clock input.

3.7 Hold Function ($\overline{HOLD}$)

The $\overline{HOLD}$ pin is used to suspend transmission to the 23A512/23LC512 while in the middle of a serial sequence without having to re-transmit the entire sequence over again. It must be held high any time this function is not being used. Once the device is selected and a serial sequence is underway, the $\overline{HOLD}$ pin may be pulled low to pause further serial communication without resetting the serial sequence.

The $\overline{HOLD}$ pin should be brought low while SCK is low, otherwise the HOLD function will not be invoked until the next SCK high-to-low transition. The 23A512/23LC512 must remain selected during this sequence. The SI and SCK levels are “don’t cares” during the time the device is paused and any transitions on these pins will be ignored. To resume serial communication, $\overline{HOLD}$ should be brought high while the SCK pin is low, otherwise serial communication will not be resumed until the next SCK high-to-low transition.

The SO line will tri-state immediately upon a high-to low transition of the $\overline{HOLD}$ pin, and will begin outputting again immediately upon a subsequent low-to-high transition of the $\overline{HOLD}$ pin, independent of the state of SCK.

Hold functionality is not available when operating in SQI mode.

 © 2012 Microchip Technology Inc.

3.8 SPI/SDI and SQI Pin Designations

SPI Mode:

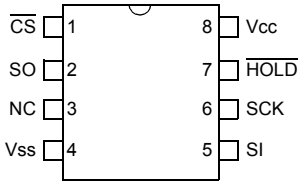

SDI Mode:

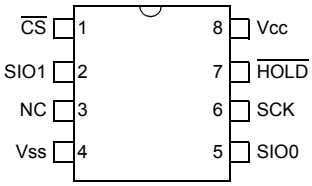

SQI Mode:

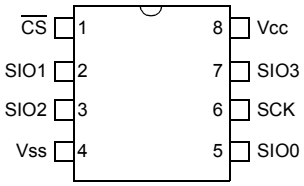

Note: Pin 3 should not be left floating when using SPI/SDI mode.

4.0 DUAL AND QUAD SERIAL MODE

The 23A512/23LC512 also supports SDI (Serial Dual) and SQI (Serial Quad) mode of operation when used with compatible master devices. As a convention for SDI mode of operation, two bits are entered per clock using the SIO0 and SIO1 pins. Bits are clocked MSB first.

For SQI mode of operation, four bits of data are entered per clock, or one nibble per clock. The nibbles are clocked MSB first.

4.1 Dual Interface Mode

The 23A512/23LC512 supports Serial Dual Input (SDI) mode of operation. To enter SDI mode the EDIO command must be clocked in (Figure 4-1). It should be noted that if the MCU resets before the SRAM, the user will need to determine the serial mode of operation of the SRAM and reset it accordingly. Byte read and write sequence in SDI mode is shown in Figure 4-2 and Figure 4-3.

FIGURE 4-1: ENTER SDI MODE (EDIO) FROM SPI MODE

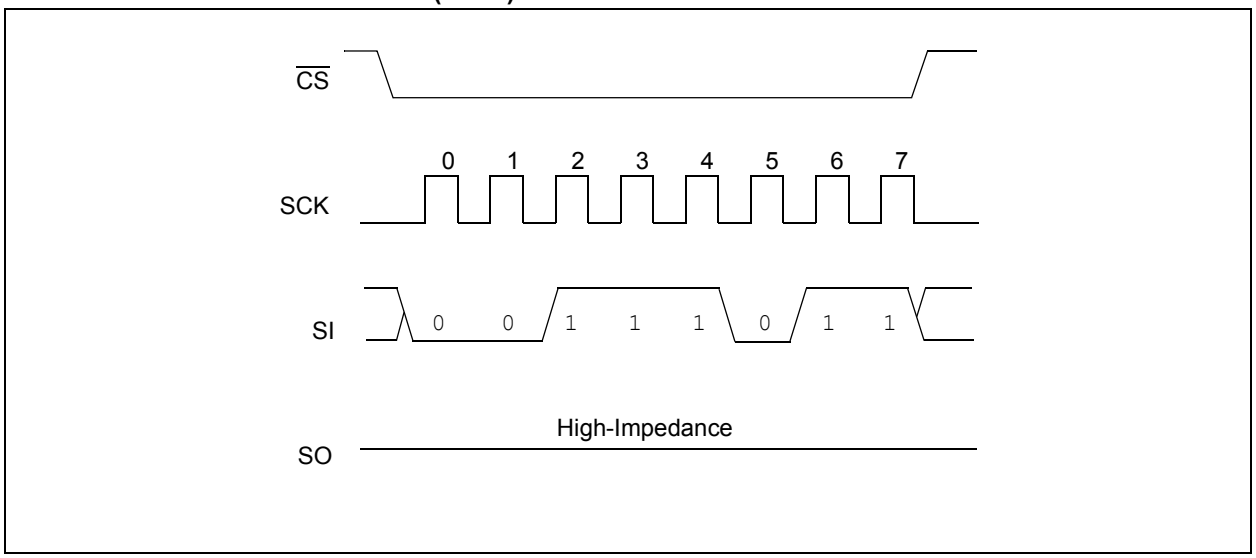

4.2 Quad Interface Mode

In addition to the Serial Dual Interface (SDI) mode of operation Serial Quad Interface (SQI) is also supported. In this mode the HOLD functionality is not available. To enter SQI mode the EQIO command must be clocked in (Figure 4-4).

 © 2012 Microchip Technology Inc.

FIGURE 4-2: BYTE READ MODE SDI

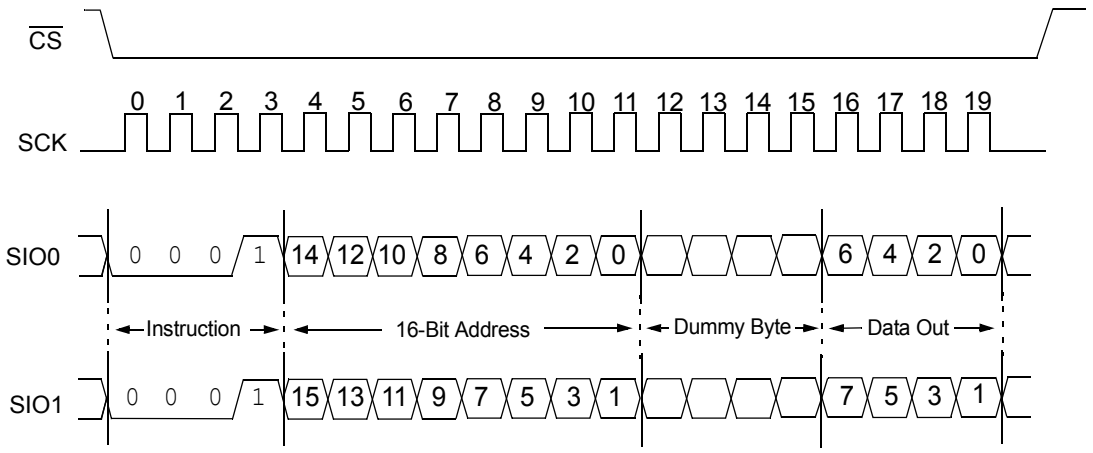

Note: Page and Sequential mode are similar in that additional bytes can be clocked out before $\overline{CS}$ is brought high.

Note: The first byte read after the address will be a dummy byte.

FIGURE 4-3: BYTE WRITE MODE SDI

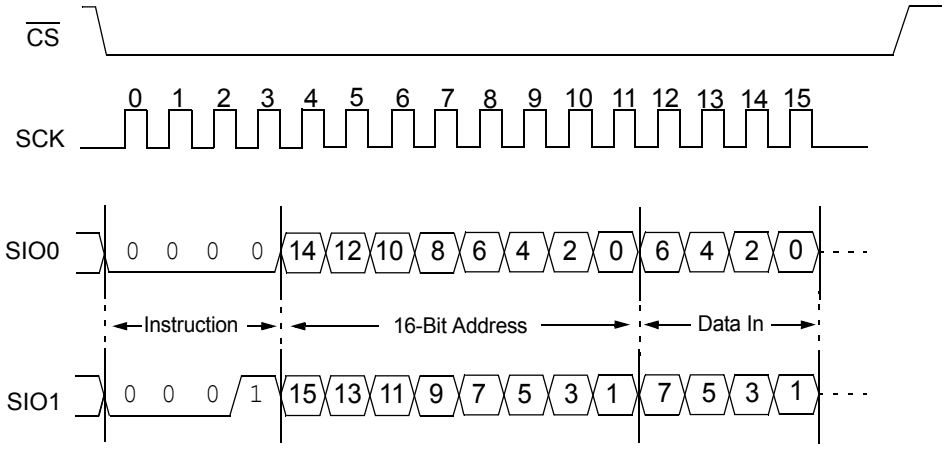

Note: Page and Sequential mode are similar in that additional bytes can be clocked in before $\overline{CS}$ is brought high.

FIGURE 4-4: ENTER SQI MODE (EQIO) FROM SPI MODE

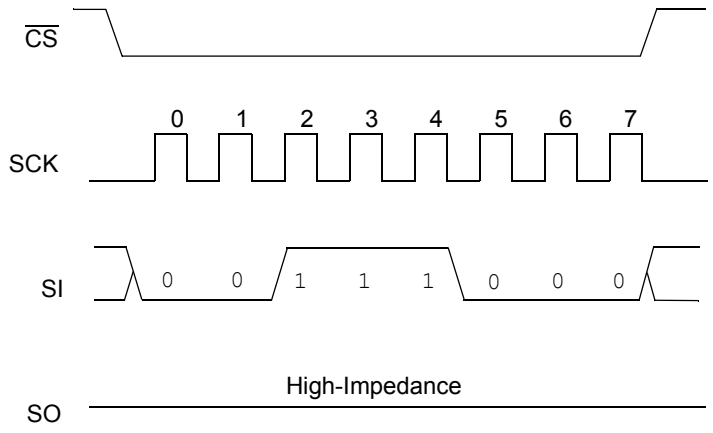

4.3 Exit SDI or SQI Mode

To exit from SDI mode, the RSTIO command must be issued. The command must be entered in the current device configuration, either SDI or SQI, see Figure 4-7 and Figure 4-8.

FIGURE 4-5: BYTE READ MODE SQI

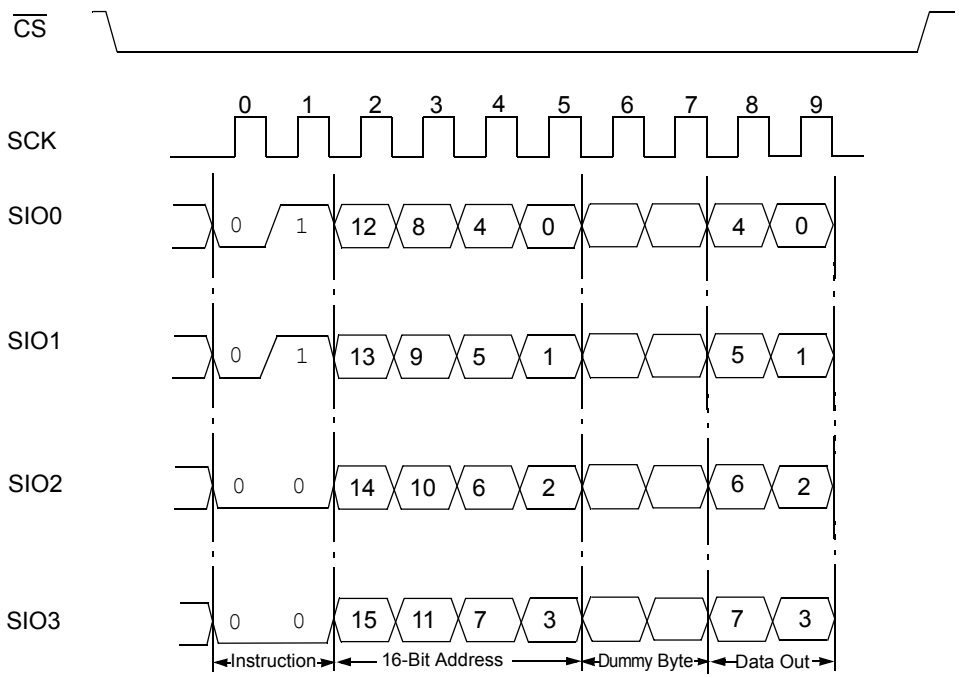

Note: Page and Sequential mode is similar in that additional bytes can be clocked out before $\overline{CS}$ is brought high.

Note: The first byte read after the address will be a dummy byte.

 © 2012 Microchip Technology Inc.

FIGURE 4-6: BYTE WRITE MODE SQI

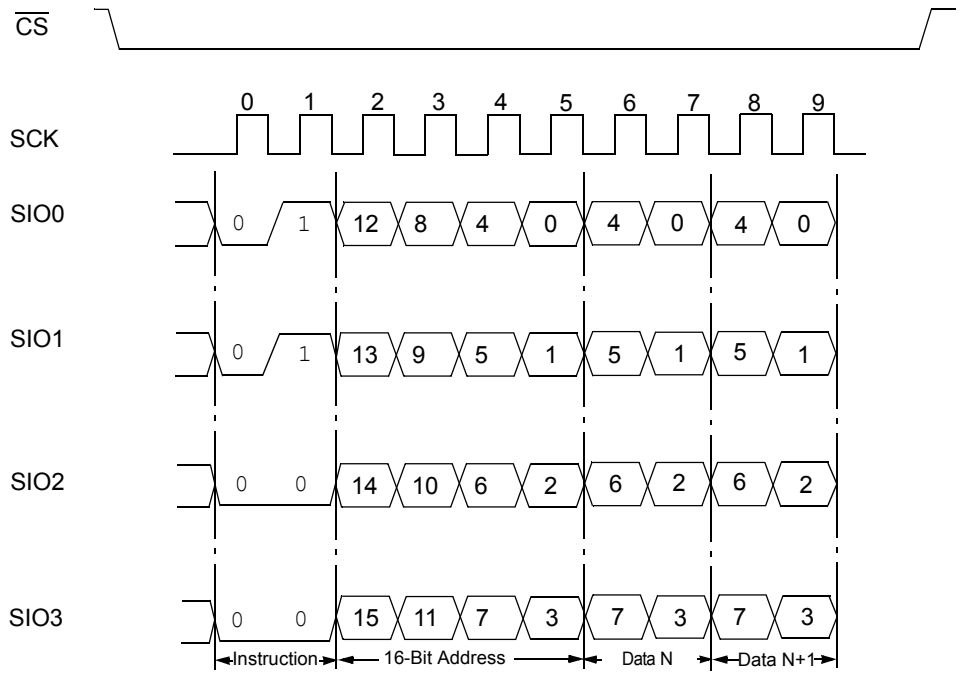

Note: Page and Sequential mode are similar in that additional bytes can be clocked out before $\overline{CS}$ is brought high.

FIGURE 4-7: RESET SDI MODE (RSTIO) – FROM SDI MODE

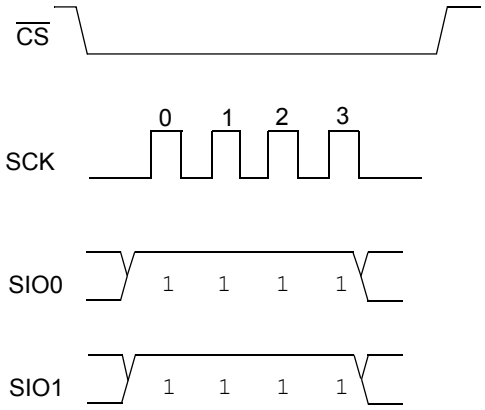

FIGURE 4-8: RESET SDI/SQI MODE (RSTIO) – FROM SQI MODE

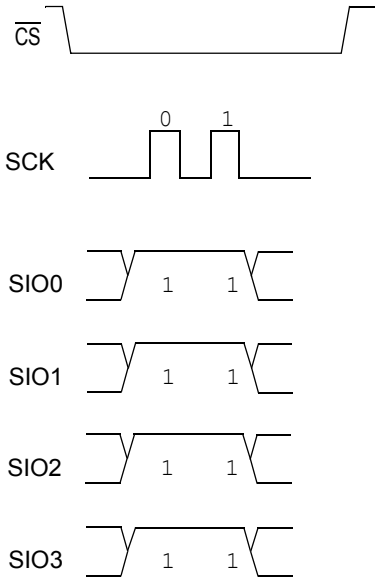

 © 2012 Microchip Technology Inc.

5.0 PACKAGING INFORMATION

5.1 Package Marking Information

8-Lead PDIP (300 mil)

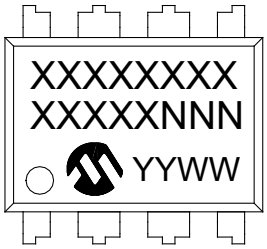

Example:

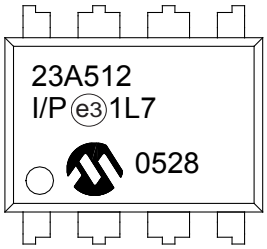

8-Lead SOIC (3.90 mm)

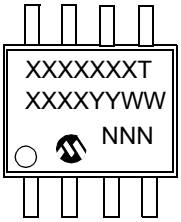

Example:

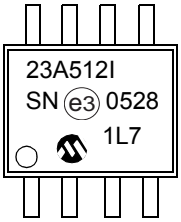

8-Lead TSSOP

Example:

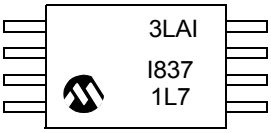

Legend:	XX...X	Part number or part number code
	T	Temperature (I, E)
	Y	Year code (last digit of calendar year)
	YY	Year code (last 2 digits of calendar year)
	WW	Week code (week of January 1 is week ‘01’)
	NNN	Alphanumeric traceability code (2 characters for small packages)
	e3	Pb-free JEDEC designator for Matte Tin (Sn)

Note: For very small packages with no room for the Pb-free JEDEC designator e3 , the marking will only appear on the outer carton or reel label.

Note: In the event the full Microchip part number cannot be marked on one line, it will be carried over to the next line, thus limiting the number of available characters for customer-specific information.

8-Lead Plastic Dual In-Line (P) – 300 mil Body [PDIP]

Note: For the most current package drawings, please see the Microchip Packaging Specification located at http://www.microchip.com/packaging

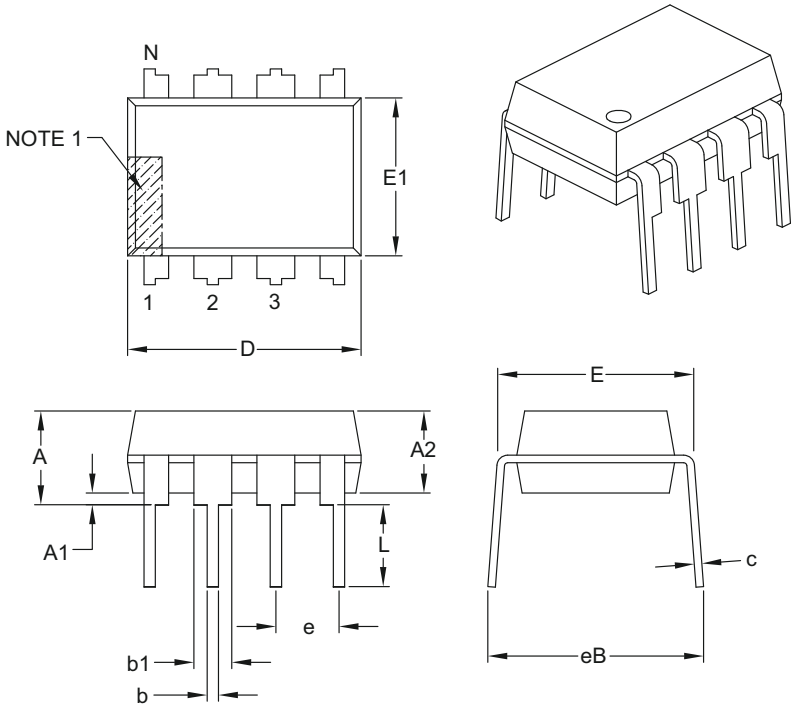

Units		INCHES		
Dimension Limits		MIN	NOM	MAX
Number of Pins	N	8		
Pitch	e	.100 BSC		
Top to Seating Plane	A	–	–	.210
Molded Package Thickness	A2	.115	.130	.195
Base to Seating Plane	A1	.015	–	–
Shoulder to Shoulder Width	E	.290	.310	.325
Molded Package Width	E1	.240	.250	.280
Overall Length	D	.348	.365	.400
Tip to Seating Plane	L	.115	.130	.150
Lead Thickness	c	.008	.010	.015
Upper Lead Width	b1	.040	.060	.070
Lower Lead Width	b	.014	.018	.022
Overall Row Spacing §	eB	–	–	.430

Notes:

1. Pin 1 visual index feature may vary, but must be located with the hatched area.
2. § Significant Characteristic.
3. Dimensions D and E1 do not include mold flash or protrusions. Mold flash or protrusions shall not exceed .010" per side.
4. Dimensioning and tolerancing per ASME Y14.5M.
   BSC: Basic Dimension. Theoretically exact value shown without tolerances.

Microchip Technology Drawing C04-018B

 © 2012 Microchip Technology Inc.

8-Lead Plastic Small Outline (SN) - Narrow, 3.90 mm Body [SOIC]

Note:	For the most current package drawings, please see the Microchip Packaging Specification located at http://www.microchip.com/packaging

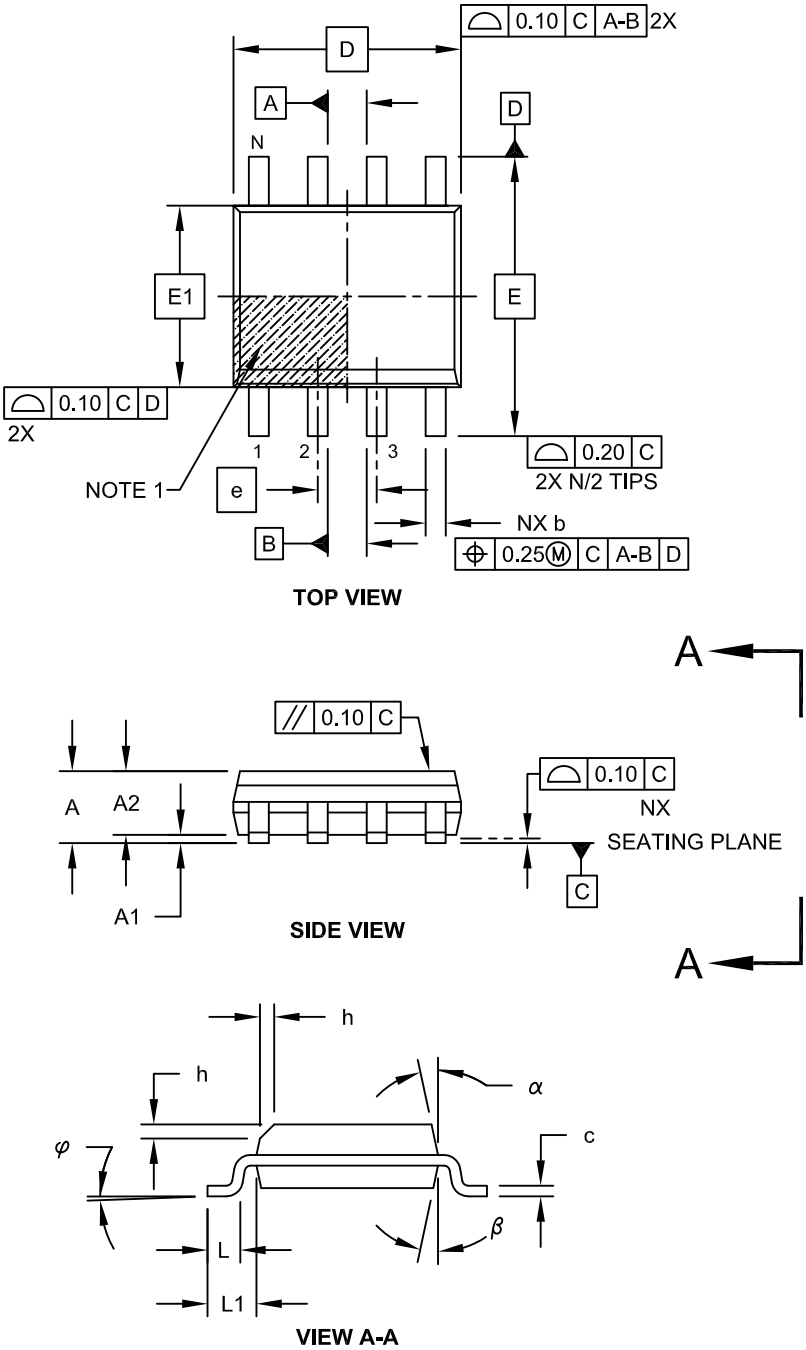

Microchip Technology Drawing No. C04-057C Sheet 1 of 2

8-Lead Plastic Small Outline (SN) - Narrow, 3.90 mm Body [SOIC]

Note: For the most current package drawings, please see the Microchip Packaging Specification located at http://www.microchip.com/packaging

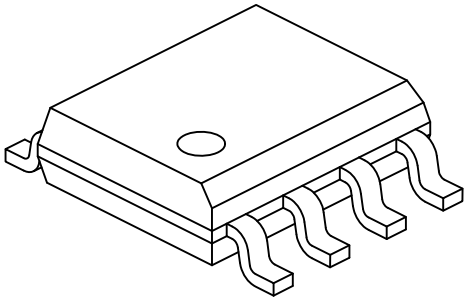

Units		MILLIMETERS		
Dimension Limits		MIN	NOM	MAX
Number of Pins	N	8		
Pitch	e	1.27 BSC		
Overall Height	A	-	-	1.75
Molded Package Thickness	A2	1.25	-	-
Standoff §	A1	0.10	-	0.25
Overall Width	E	6.00 BSC		
Molded Package Width	E1	3.90 BSC		
Overall Length	D	4.90 BSC		
Chamfer (Optional)	h	0.25	-	0.50
Foot Length	L	0.40	-	1.27
Footprint	L1	1.04 REF		
Foot Angle	φ	0°	-	8°
Lead Thickness	c	0.17	-	0.25
Lead Width	b	0.31	-	0.51
Mold Draft Angle Top	α	5°	-	15°
Mold Draft Angle Bottom	β	5°	-	15°

Notes:

1. Pin 1 visual index feature may vary, but must be located within the hatched area.
2. § Significant Characteristic
3. Dimensions D and E1 do not include mold flash or protrusions. Mold flash or protrusions shall not exceed 0.15mm per side.
4. Dimensioning and tolerancing per ASME Y14.5M

   BSC: Basic Dimension. Theoretically exact value shown without tolerances.

   REF: Reference Dimension, usually without tolerance, for information purposes only.

Microchip Technology Drawing No. C04-057C Sheet 2 of 2

 © 2012 Microchip Technology Inc.

8-Lead Plastic Small Outline (SN) – Narrow, 3.90 mm Body [SOIC]

Note: For the most current package drawings, please see the Microchip Packaging Specification located at http://www.microchip.com/packaging

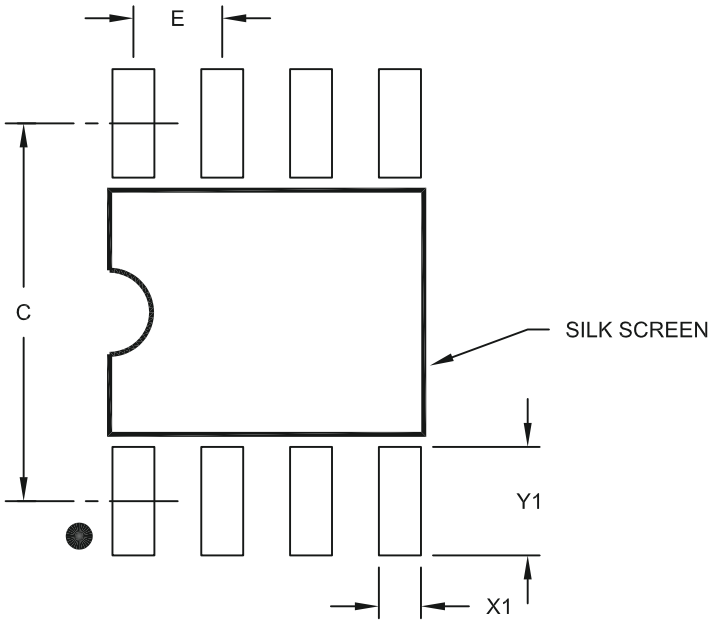

RECOMMENDED LAND PATTERN

Units		MILLIMETERS		
Dimension Limits		MIN	NOM	MAX
Contact Pitch	E	1.27 BSC		
Contact Pad Spacing	C		5.40	
Contact Pad Width (X8)	X1			0.60
Contact Pad Length (X8)	Y1			1.55

Notes:

1. Dimensioning and tolerancing per ASME Y14.5M
   BSC: Basic Dimension. Theoretically exact value shown without tolerances.

Microchip Technology Drawing No. C04-2057A

8-Lead Plastic Thin Shrink Small Outline (ST) – 4.4 mm Body [TSSOP]

Note: For the most current package drawings, please see the Microchip Packaging Specification located at http://www.microchip.com/packaging

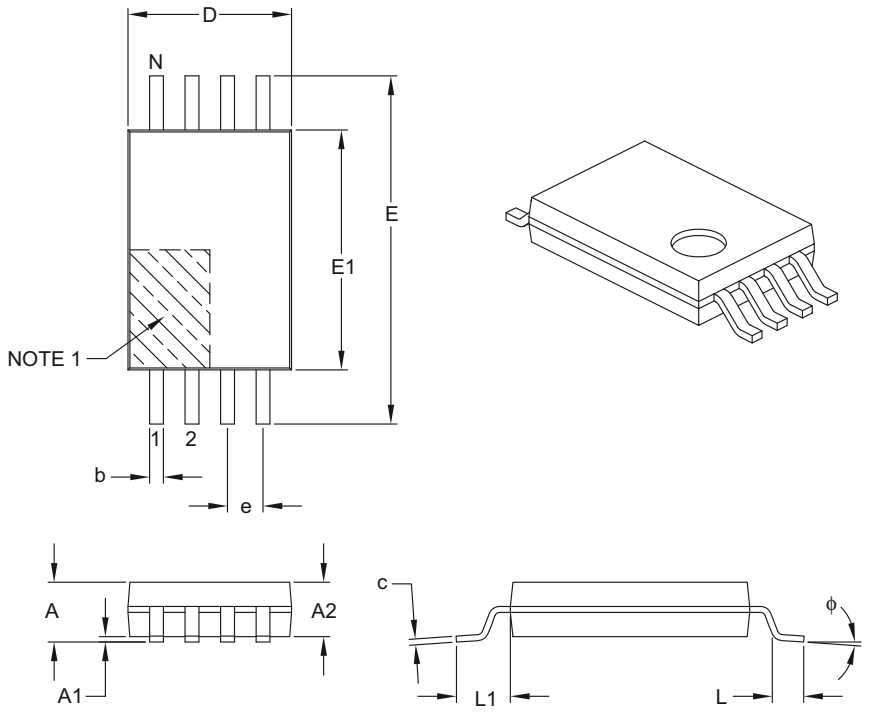

Units		MILLIMETERS		
Dimension Limits		MIN	NOM	MAX
Number of Pins	N	8		
Pitch	e	0.65 BSC		
Overall Height	A	–	–	1.20
Molded Package Thickness	A2	0.80	1.00	1.05
Standoff	A1	0.05	–	0.15
Overall Width	E	6.40 BSC		
Molded Package Width	E1	4.30	4.40	4.50
Molded Package Length	D	2.90	3.00	3.10
Foot Length	L	0.45	0.60	0.75
Footprint	L1	1.00 REF		
Foot Angle	ϕ	0°	–	8°
Lead Thickness	c	0.09	–	0.20
Lead Width	b	0.19	–	0.30

Notes:

1. Pin 1 visual index feature may vary, but must be located within the hatched area.
2. Dimensions D and E1 do not include mold flash or protrusions. Mold flash or protrusions shall not exceed 0.15 mm per side.
3. Dimensioning and tolerancing per ASME Y14.5M.
   BSC: Basic Dimension. Theoretically exact value shown without tolerances.
   REF: Reference Dimension, usually without tolerance, for information purposes only.

Microchip Technology Drawing C04-086B

 © 2012 Microchip Technology Inc.

8-Lead Plastic Thin Shrink Small Outline (ST) - 4.4 mm Body [TSSOP]

Note: For the most current package drawings, please see the Microchip Packaging Specification located at http://www.microchip.com/packaging

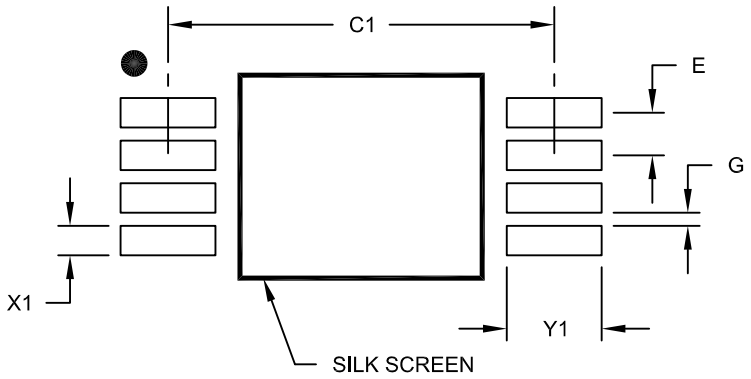

RECOMMENDED LAND PATTERN

Units		MILLIMETERS		
Dimension Limits		MIN	NOM	MAX
Contact Pitch	E	0.65 BSC		
Contact Pad Spacing	C1		5.90	
Contact Pad Width (X8)	X1			0.45
Contact Pad Length (X8)	Y1			1.45
Distance Between Pads	G	0.20		

Notes:

1. Dimensioning and tolerancing per ASME Y14.5M
   BSC: Basic Dimension. Theoretically exact value shown without tolerances.

Microchip Technology Drawing No. C04-2086A

APPENDIX A: REVISION HISTORY

Revision A (09/2012)

Initial release.

 © 2012 Microchip Technology Inc.

THE MICROCHIP WEB SITE

Microchip provides online support via our WWW site at www.microchip.com. This web site is used as a means to make files and information easily available to customers. Accessible by using your favorite Internet browser, the web site contains the following information:

- **Product Support** – Data sheets and errata, application notes and sample programs, design resources, user's guides and hardware support documents, latest software releases and archived software
- **General Technical Support** – Frequently Asked Questions (FAQ), technical support requests, online discussion groups, Microchip consultant program member listing
- **Business of Microchip** – Product selector and ordering guides, latest Microchip press releases, listing of seminars and events, listings of Microchip sales offices, distributors and factory representatives

CUSTOMER CHANGE NOTIFICATION SERVICE

Microchip's customer notification service helps keep customers current on Microchip products. Subscribers will receive e-mail notification whenever there are changes, updates, revisions or errata related to a specified product family or development tool of interest.

To register, access the Microchip web site at www.microchip.com. Under "Support", click on "Customer Change Notification" and follow the registration instructions.

CUSTOMER SUPPORT

Users of Microchip products can receive assistance through several channels:

- Distributor or Representative
- Local Sales Office
- Field Application Engineer (FAE)
- Technical Support
- Development Systems Information Line

Customers should contact their distributor, representative or field application engineer (FAE) for support. Local sales offices are also available to help customers. A listing of sales offices and locations is included in the back of this document.

Technical support is available through the web site at: http://microchip.com/support

READER RESPONSE

It is our intention to provide you with the best documentation possible to ensure successful use of your Microchip product. If you wish to provide your comments on organization, clarity, subject matter, and ways in which our documentation can better serve you, please FAX your comments to the Technical Publications Manager at (480) 792-4150.

Please list the following information, and use this outline to provide us with your comments about this document.

TO: Technical Publications Manager

RE: Reader Response

Total Pages Sent _____

From: Name _____

Company _____

Address _____

City / State / ZIP / Country _____

Telephone: (_____) _____ - _____ FAX: (_____) _____ - _____

Application (optional):

Would you like a reply? ___Y ___N

Device: 23A512/23LC512 Literature Number: DS25155A

Questions:

1. What are the best features of this document?

_____

_____

2. How does this document meet your hardware and software development needs?

_____

_____

3. Do you find the organization of this document easy to follow? If not, why?

_____

_____

4. What additions to the document do you think would enhance the structure and subject?

_____

_____

5. What deletions from the document could be made without affecting the overall usefulness?

_____

_____

6. Is there any incorrect or misleading information (what and where)?

_____

_____

7. How would you improve this document?

_____

_____

 © 2012 Microchip Technology Inc.

PRODUCT IDENTIFICATION SYSTEM

To order or obtain information, e.g., on pricing or delivery, refer to the factory or the listed sales office. Not all possible ordering options are shown below..

PART NO.	X	–	X	/XX
Device	Tape & Reel		Temp Range	Package

Device:	23A512 =		512 Kbit, 1.7 - 2.2V, SPI Serial SRAM
	23LC512 =		512 Kbit, 2.5 - 5.5V, SPI Serial SRAM
Tape & Reel:	Blank	=	Standard packaging (tube)
	T	=	Tape & Reel
Temperature Range:	I	=	-40°C to+85°C
Package:	SN	=	Plastic SOIC (3.90 mm body), 8-lead
	ST	=	Plastic TSSOP (4.4 mm body), 8-lead
	P	=	Plastic PDIP (300 mil body), 8-lead

Examples:

a) 23A512-I/ST = 512 Kbit, 1.7 - 2.2V Serial SRAM, Industrial temp., TSSOP package

b) 23LC512-I/SN = 512 Kbit, 2.5-5.5V Serial SRAM, Industrial temp., Tape & Reel, SOIC package

c) 23LC512-I/P = 512 Kbit, 2.5-5.5V Serial SRAM, Industrial temp., PDIP package

NOTES:

 © 2012 Microchip Technology Inc.

Note the following details of the code protection feature on Microchip devices:

- Microchip products meet the specification contained in their particular Microchip Data Sheet.
- Microchip believes that its family of products is one of the most secure families of its kind on the market today, when used in the intended manner and under normal conditions.
- There are dishonest and possibly illegal methods used to breach the code protection feature. All of these methods, to our knowledge, require using the Microchip products in a manner outside the operating specifications contained in Microchip's Data Sheets. Most likely, the person doing so is engaged in theft of intellectual property.
- Microchip is willing to work with the customer who is concerned about the integrity of their code.
- Neither Microchip nor any other semiconductor manufacturer can guarantee the security of their code. Code protection does not mean that we are guaranteeing the product as "unbreakable."

Code protection is constantly evolving. We at Microchip are committed to continuously improving the code protection features of our products. Attempts to break Microchip's code protection feature may be a violation of the Digital Millennium Copyright Act. If such acts allow unauthorized access to your software or other copyrighted work, you may have a right to sue for relief under that Act.

Information contained in this publication regarding device applications and the like is provided only for your convenience and may be superseded by updates. It is your responsibility to ensure that your application meets with your specifications. MICROCHIP MAKES NO REPRESENTATIONS OR WARRANTIES OF ANY KIND WHETHER EXPRESS OR IMPLIED, WRITTEN OR ORAL, STATUTORY OR OTHERWISE, RELATED TO THE INFORMATION, INCLUDING BUT NOT LIMITED TO ITS CONDITION, QUALITY, PERFORMANCE, MERCHANTABILITY OR FITNESS FOR PURPOSE**.** Microchip disclaims all liability arising from this information and its use. Use of Microchip devices in life support and/or safety applications is entirely at the buyer's risk, and the buyer agrees to defend, indemnify and hold harmless Microchip from any and all damages, claims, suits, or expenses resulting from such use. No licenses are conveyed, implicitly or otherwise, under any Microchip intellectual property rights.

QUALITY MANAGEMENT SYSTEM
CERTIFIED BY DNV
═ ISO/TS 16949 ═

Trademarks

The Microchip name and logo, the Microchip logo, dsPIC, FlashFlex, KEELOQ, KEELOQ logo, MPLAB, PIC, PICmicro, PICSTART, PIC^{32} logo, rfPIC, SST, SST Logo, SuperFlash and UNI/O are registered trademarks of Microchip Technology Incorporated in the U.S.A. and other countries.

FilterLab, Hampshire, HI-TECH C, Linear Active Thermistor, MTP, SEEVAL and The Embedded Control Solutions Company are registered trademarks of Microchip Technology Incorporated in the U.S.A.

Silicon Storage Technology is a registered trademark of Microchip Technology Inc. in other countries.

Analog-for-the-Digital Age, Application Maestro, BodyCom, chipKIT, chipKIT logo, CodeGuard, dsPICDEM, dsPICDEM.net, dsPICworks, dsSPEAK, ECAN, ECONOMONITOR, FanSense, HI-TIDE, In-Circuit Serial Programming, ICSP, Mindi, MiWi, MPASM, MPF, MPLAB Certified logo, MPLIB, MPLINK, mTouch, Omniscient Code Generation, PICC, PICC-18, PICDEM, PICDEM.net, PICkit, PICtail, REAL ICE, rfLAB, Select Mode, SQI, Serial Quad I/O, Total Endurance, TSHARC, UniWinDriver, WiperLock, ZENA and Z-Scale are trademarks of Microchip Technology Incorporated in the U.S.A. and other countries.

SQTP is a service mark of Microchip Technology Incorporated in the U.S.A.

GestIC and ULPP are registered trademarks of Microchip Technology Germany II GmbH & Co. & KG, a subsidiary of Microchip Technology Inc., in other countries.

All other trademarks mentioned herein are property of their respective companies.

© 2012, Microchip Technology Incorporated, Printed in the U.S.A., All Rights Reserved.

Printed on recycled paper.

ISBN: 9781620765982

Microchip received ISO/TS-16949:2009 certification for its worldwide headquarters, design and wafer fabrication facilities in Chandler and Tempe, Arizona; Gresham, Oregon and design centers in California and India. The Company's quality system processes and procedures are for its PIC® MCUs and dsPIC® DSCs, KEELOQ® code hopping devices, Serial EEPROMs, microperipherals, nonvolatile memory and analog products. In addition, Microchip's quality system for the design and manufacture of development systems is ISO 9001:2000 certified.

Worldwide Sales and Service

AMERICAS

Corporate Office
2355 West Chandler Blvd.
Chandler, AZ 85224-6199
Tel: 480-792-7200
Fax: 480-792-7277
Technical Support:
http://www.microchip.com/support
Web Address:
www.microchip.com

Atlanta
Duluth, GA
Tel: 678-957-9614
Fax: 678-957-1455

Boston
Westborough, MA
Tel: 774-760-0087
Fax: 774-760-0088

Chicago
Itasca, IL
Tel: 630-285-0071
Fax: 630-285-0075

Cleveland
Independence, OH
Tel: 216-447-0464
Fax: 216-447-0643

Dallas
Addison, TX
Tel: 972-818-7423
Fax: 972-818-2924

Detroit
Farmington Hills, MI
Tel: 248-538-2250
Fax: 248-538-2260

Indianapolis
Noblesville, IN
Tel: 317-773-8323
Fax: 317-773-5453

Los Angeles
Mission Viejo, CA
Tel: 949-462-9523
Fax: 949-462-9608

Santa Clara
Santa Clara, CA
Tel: 408-961-6444
Fax: 408-961-6445

Toronto
Mississauga, Ontario, Canada
Tel: 905-673-0699
Fax: 905-673-6509

ASIA/PACIFIC

Asia Pacific Office
Suites 3707-14, 37th Floor
Tower 6, The Gateway
Harbour City, Kowloon
Hong Kong
Tel: 852-2401-1200
Fax: 852-2401-3431

Australia - Sydney
Tel: 61-2-9868-6733
Fax: 61-2-9868-6755

China - Beijing
Tel: 86-10-8569-7000
Fax: 86-10-8528-2104

China - Chengdu
Tel: 86-28-8665-5511
Fax: 86-28-8665-7889

China - Chongqing
Tel: 86-23-8980-9588
Fax: 86-23-8980-9500

China - Hangzhou
Tel: 86-571-2819-3187
Fax: 86-571-2819-3189

China - Hong Kong SAR
Tel: 852-2401-1200
Fax: 852-2401-3431

China - Nanjing
Tel: 86-25-8473-2460
Fax: 86-25-8473-2470

China - Qingdao
Tel: 86-532-8502-7355
Fax: 86-532-8502-7205

China - Shanghai
Tel: 86-21-5407-5533
Fax: 86-21-5407-5066

China - Shenyang
Tel: 86-24-2334-2829
Fax: 86-24-2334-2393

China - Shenzhen
Tel: 86-755-8203-2660
Fax: 86-755-8203-1760

China - Wuhan
Tel: 86-27-5980-5300
Fax: 86-27-5980-5118

China - Xian
Tel: 86-29-8833-7252
Fax: 86-29-8833-7256

China - Xiamen
Tel: 86-592-2388138
Fax: 86-592-2388130

China - Zhuhai
Tel: 86-756-3210040
Fax: 86-756-3210049

ASIA/PACIFIC

India - Bangalore
Tel: 91-80-3090-4444
Fax: 91-80-3090-4123

India - New Delhi
Tel: 91-11-4160-8631
Fax: 91-11-4160-8632

India - Pune
Tel: 91-20-2566-1512
Fax: 91-20-2566-1513

Japan - Osaka
Tel: 81-66-152-7160
Fax: 81-66-152-9310

Japan - Yokohama
Tel: 81-45-471- 6166
Fax: 81-45-471-6122

Korea - Daegu
Tel: 82-53-744-4301
Fax: 82-53-744-4302

Korea - Seoul
Tel: 82-2-554-7200
Fax: 82-2-558-5932 or
82-2-558-5934

Malaysia - Kuala Lumpur
Tel: 60-3-6201-9857
Fax: 60-3-6201-9859

Malaysia - Penang
Tel: 60-4-227-8870
Fax: 60-4-227-4068

Philippines - Manila
Tel: 63-2-634-9065
Fax: 63-2-634-9069

Singapore
Tel: 65-6334-8870
Fax: 65-6334-8850

Taiwan - Hsin Chu
Tel: 886-3-5778-366
Fax: 886-3-5770-955

Taiwan - Kaohsiung
Tel: 886-7-536-4818
Fax: 886-7-330-9305

Taiwan - Taipei
Tel: 886-2-2500-6610
Fax: 886-2-2508-0102

Thailand - Bangkok
Tel: 66-2-694-1351
Fax: 66-2-694-1350

EUROPE

Austria - Wels
Tel: 43-7242-2244-39
Fax: 43-7242-2244-393

Denmark - Copenhagen
Tel: 45-4450-2828
Fax: 45-4485-2829

France - Paris
Tel: 33-1-69-53-63-20
Fax: 33-1-69-30-90-79

Germany - Munich
Tel: 49-89-627-144-0
Fax: 49-89-627-144-44

Italy - Milan
Tel: 39-0331-742611
Fax: 39-0331-466781

Netherlands - Drunen
Tel: 31-416-690399
Fax: 31-416-690340

Spain - Madrid
Tel: 34-91-708-08-90
Fax: 34-91-708-08-91

UK - Wokingham
Tel: 44-118-921-5869
Fax: 44-118-921-5820

11/29/11

© 2012 Microchip Technology Inc.

OCEAN CHIPS
Океан Электроники
Поставка электронных компонентов

Компания «Океан Электроники» предлагает заключение долгосрочных отношений при поставках импортных электронных компонентов на взаимовыгодных условиях!

Наши преимущества:

- Поставка оригинальных импортных электронных компонентов напрямую с производств Америки, Европы и Азии, а так же с крупнейших складов мира;
- Широкая линейка поставок активных и пассивных импортных электронных компонентов (более 30 млн. наименований);
- Поставка сложных, дефицитных, либо снятых с производства позиций;
- Оперативные сроки поставки под заказ (от 5 рабочих дней);
- Экспресс доставка в любую точку России;
- Помощь Конструкторского Отдела и консультации квалифицированных инженеров;
- Техническая поддержка проекта, помощь в подборе аналогов, поставка прототипов;
- Поставка электронных компонентов под контролем ВП;
- Система менеджмента качества сертифицирована по Международному стандарту ISO 9001;
- При необходимости вся продукция военного и аэрокосмического назначения проходит испытания и сертификацию в лаборатории (по согласованию с заказчиком);
- Поставка специализированных компонентов военного и аэрокосмического уровня качества (Xilinx, Altera, Analog Devices, Intersil, Interpoint, Microsemi, Actel, Aeroflex, Peregrine, VPT, Syfer, Eurofarad, Texas Instruments, MS Kennedy, Miteq, Cobham, E2V, MA-COM, Hittite, Mini-Circuits, General Dynamics и др.);

Компания «Океан Электроники» является официальным дистрибьютором и эксклюзивным представителем в России одного из крупнейших производителей разъемов военного и аэрокосмического назначения **«JONHON»**, а так же официальным дистрибьютором и эксклюзивным представителем в России производителя высокотехнологичных и надежных решений для передачи СВЧ сигналов **«FORSTAR»**.

AVIC JONHON

«JONHON» (основан в 1970 г.)

Разъемы специального, военного и аэрокосмического назначения:

(Применяются в военной, авиационной, аэрокосмической, морской, железнодорожной, горно- и нефтедобывающей отраслях промышленности)

«FORSTAR» (основан в 1998 г.)

ВЧ соединители, коаксиальные кабели, кабельные сборки и микроволновые компоненты:

(Применяются в телекоммуникациях гражданского и специального назначения, в средствах связи, РЛС, а так же военной, авиационной и аэрокосмической отраслях промышленности).

FORSTAR®

Телефон: 8 (812) 309-75-97 (многоканальный)
Факс: 8 (812) 320-03-32
Электронная почта: ocean@oceanchips.ru
Web: http://oceanchips.ru/
Адрес: 198099, г. Санкт-Петербург, ул. Калинина, д. 2, корп. 4, лит. А