LA Varistor Series

The LA Series of transient voltage surge suppressors are radial-lead varistors (MOVs) that are designed to be operated continuously across AC power lines. These UL recognized varistors require very little mounting space, and are offered in various standard lead form options.

The LA Series varistors are available in four model sizes: 7mm, 10mm, 14mm and 20mm; and have a $V_{M(AC)RMS}$ voltage range from 130V to 1000V, and an energy absorption capability up to 360J. Some LA series model numbers are available with clamping voltage selections, designated by a model number suffix of either A or B. The “A” selection is the standard model; the “B” selection provides a lower clamping voltage.

See LA Series Device Ratings and Specifications table for part number and brand information.

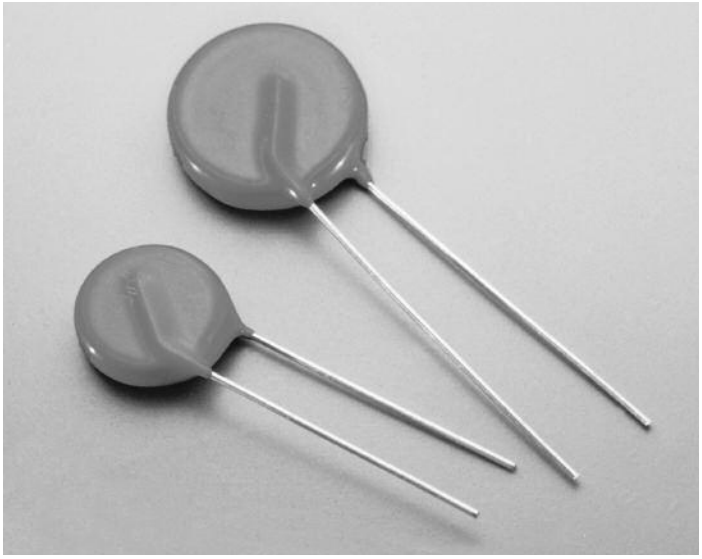

Features

- Energy Absorption Capability (W_{TM}) . . .. Up to 360J
- Wide Operating Voltage Range $V_{M(AC)RMS}$ . . . . . 130V to 1000V
- No Derating Up to 85°C Ambient
- Available in Tape and Reel or Bulk Pack

AGENCY APPROVALS: Recognized under the components program of Underwriters Laboratories. Certified by CSA, VDE and CECC.

AGENCY FILE NUMBERS: UL E75961, E56529, E135010; CSA LR91788; VDE 116895E; CECC 42201-006.

ALSO SEE LITTELFUSE ULTRAMOV™ AND C-III VARISTOR SERIES

LA Varistor Series

Absolute Maximum Ratings For ratings of individual members of a series, see Device Ratings and Specifications chart

	LA SERIES	UNITS
Continuous:		
Steady State Applied Voltage:		
AC Voltage Range ($V_{M(AC)RMS}$)	130 to 1000	V
DC Voltage Range ($V_{M(DC)}$)	175 to 1200	V
Transients:		
Peak Pulse Current (I_{TM})		
For 8/20µs Current Wave (See Figure 2)	1200 to 6500	A
Single Pulse Energy Range		
For 10/1000µs Current Wave (W_{TM})	11 to 360	J
Operating Ambient Temperature Range (T_A)	-55 to 85	°C
Storage Temperature Range (T_{STG})	-55 to 125	°C
Temperature Coefficient (αV) of Clamping Voltage (V_C) at Specified Test Current	<0.01	%/°C
Hi-Pot Encapsulation (Isolation Voltage Capability)	2500	V
(Dielectric must withstand indicated DC voltage for one minute per MIL-STD 202, Method 301)		
Insulation Resistance	1000	MΩ

CAUTION: Stresses above those listed in "Absolute Maximum Ratings" may cause permanent damage to the device. This is a stress only rating and operation of the device at these or any other conditions above those indicated in the operational sections of this specification is not implied.

Device Ratings and Specifications

PART NUMBER	MODEL SIZE DISC DIA. (mm)	DEVICE MODEL NUMBER BRAND-ING	MAXIMUM RATING (85°C)				SPECIFICATIONS (25°C)				
			CONTINUOUS		TRANSIENT						
			V_{RMS}	V_{DC}	ENERGY 10 x 1000µs	PEAK CURRENT 8 x 20µs	VARISTOR VOLTAGE AT 1mA DC TEST CURRENT		MAXIMUM CLAMPING VOLTAGE 8 x 20µs		TYPICAL CAPACITANCE f = 1MHz
			$V_{M(AC)}$	$V_{M(DC)}$	W_{TM}	I_{TM}	V_{NOM} MIN	V_{NOM} MAX	V_C	I_{PK}	C
			(V)	(V)	(J)	(A)	(V)		(V)	(A)	(pF)
V130LA1	7	1301	130	175	11	1200	184	255	390	10	180
V130LA2	7	1302	130	175	11	1200	184	228	340	10	180
V130LA5	10	1305	130	175	20	2500	184	228	340	25	450
V130LA10A	14	130L10	130	175	38	4500	184	228	340	50	1000
V130LA20A	20	130L20	130	175	70	6500	184	228	340	100	1900
V130LA20B	20	130L20B	130	175	70	6500	184	220	325	100	1900
V140LA2	7	1402	140	180	12	1200	198	242	360	10	160
V140LA5	10	1405	140	180	22	2500	198	242	360	25	400
V140LA10A	14	140L10	140	180	42	4500	198	242	360	50	900
V140LA20A	20	140L20	140	180	75	6500	198	242	340	100	1750
V150LA1	7	1501	150	200	13	1200	212	284	430	10	150
V150LA2	7	1502	150	200	13	1200	212	268	395	10	150
V150LA5	10	1505	150	200	25	2500	212	268	395	25	360
V150LA10A	14	150L10	150	200	45	4500	212	268	395	50	800
V150LA20A	20	150L20	150	200	80	6500	212	268	395	100	1600
V150LA20B	20	150L20B	150	200	80	6500	212	243	360	100	1600
V175LA2	7	1752	175	225	15	1200	247	303	455	10	130
V175LA5	10	1755	175	225	30	2500	247	303	455	25	350
V175LA10A	14	175L10	175	225	55	4500	247	303	455	50	700
V175LA20A	20	175L20	175	225	90	6500	247	303	455	100	1400
V230LA4	7	2304	230	300	20	1200	324	396	595	10	100
V230LA10	10	230L	230	300	35	2500	324	396	595	25	250
V230LA20A	14	230L20	230	300	70	4500	324	396	595	50	550
V230LA40A	20	230L40	230	300	122	6500	324	396	595	100	1100

LA Varistor Series

Device Ratings and Specifications (Continued)

PART NUMBER	MODEL SIZE DISC DIA. (mm)	DEVICE MODEL NUMBER BRAND-ING	MAXIMUM RATING (85°C) CONTINUOUS V_{RMS} $V_{M(AC)}$ (V)	CONTINUOUS V_{DC} $V_{M(DC)}$ (V)	TRANSIENT ENERGY 10 x 1000µs W_{TM} (J)	TRANSIENT PEAK CURRENT 8 x 20µs I_{TM} (A)	SPECIFICATIONS (25°C) VARISTOR VOLTAGE AT 1mA DC TEST CURRENT V_{NOM} MIN (V)	V_{NOM} MAX (V)	MAXIMUM CLAMPING VOLTAGE 8 x 20µs V_C (V)	I_{PK} (A)	TYPICAL CAPACITANCE f = 1MHz C (pF)
V250LA2	7	2502	250	330	21	1200	354	473	730	10	90
V250LA4	7	2504	250	330	21	1200	354	429	650	10	90
V250LA10	10	250L	250	330	40	2500	354	429	650	25	220
V250LA20A	14	250L20	250	330	72	4500	354	429	650	50	500
V250LA40A	20	250L40	250	330	130	6500	354	429	650	100	1000
V250LA40B	20	250L40B	250	330	130	6500	354	413	620	100	1000
V275LA2	7	2752	275	369	23	1200	389	515	775	10	80
V275LA4	7	2754	275	369	23	1200	389	473	710	10	80
V275LA10	10	275L	275	369	45	2500	389	473	710	25	200
V275LA20A	14	275L20	275	369	75	4500	389	473	710	50	450
V275LA40A	20	275L40	275	369	140	6500	389	473	710	100	900
V275LA40B	20	275L40B	275	369	140	6500	389	453	680	100	900
V300LA2	7	3002	300	405	25	1200	420	565	870	10	70
V300LA4	7	3004	300	405	25	1200	420	517	775	10	70
V300LA10	10	300L	300	405	46	2500	420	517	775	25	180
V300LA20A	14	300L20	300	405	77	4500	420	517	775	50	400
V300LA40A	20	300L40	300	405	165	6500	420	517	775	100	800
V320LA7	7	3207	320	420	25	1200	462	565	850	10	65
V320LA10	10	320L	320	420	48	2500	462	565	850	25	170
V320LA20A	14	320L20	320	420	80	4500	462	565	850	50	380
V320LA40B	20	320L40	320	420	150	6500	462	540	810	100	750
V385LA7	7	3857	385	505	27	1200	558	682	1025	10	60
V385LA10	10	385L	385	505	51	2500	558	682	1025	25	160
V385LA20A	14	385L20	385	505	85	4500	558	682	1025	50	360
V385LA40B	20	385L40	385	505	160	6500	558	682	1025	100	700
V420LA7	7	4207	420	560	30	1200	610	748	1120	10	55
V420LA10	10	420L	420	560	55	2500	610	748	1120	25	140
V420LA20A	14	420L20	420	560	90	4500	610	748	1120	50	300
V420LA40B	20	420L40	420	560	160	6500	610	720	1060	100	600
V460LA7	7	4607	460	615	37	1200	702	858	1130	10	55
V480LA7	7	4807	480	640	35	1200	670	825	1240	10	50
V480LA10	10	480L	480	640	60	2500	670	825	1240	25	120
V480LA40A	14	480L40	480	640	105	4500	670	825	1240	50	270
V480LA80B	20	480L80	480	640	180	6500	670	790	1160	100	550
V510LA10	10	510L	510	675	63	2500	735	910	1350	25	100
V510LA40A	14	510L40	510	675	110	4500	735	910	1350	50	250
V510LA80B	20	510L80	510	675	190	6500	735	860	1280	100	500
V575LA10	10	575L	575	730	65	2500	805	1000	1500	25	90
V575LA40A	14	575L40	575	730	120	4500	805	1000	1500	50	220
V575LA80B	20	575L80	575	730	220	6500	805	960	1410	100	450
V625LA10	10	625L	625	825	67	2500	900	1100	1650	25	80
V625LA40A	14	625L40	625	825	125	4500	900	1100	1650	50	210
V625LA80B	20	625L80	625	825	230	6500	900	1100	1650	100	425

LA Varistor Series

Device Ratings and Specifications (Continued)

PART NUMBER	MODEL SIZE DISC DIA. (mm)	DEVICE MODEL NUMBER BRAND-ING	MAXIMUM RATING (85°C) CONTINUOUS V_{RMS} $V_{M(AC)}$ (V)	V_{DC} $V_{M(DC)}$ (V)	TRANSIENT ENERGY 10 x 1000µs W_{TM} (J)	PEAK CURRENT 8 x 20µs I_{TM} (A)	SPECIFICATIONS (25°C) VARISTOR VOLT-AGE AT 1mA DC TEST CURRENT V_{NOM} MIN (V)	V_{NOM} MAX (V)	MAXIMUM CLAMPING VOLTAGE 8 x 20µs V_C (V)	I_{PK} (A)	TYPICAL CAPACI-TANCE f = 1MHz C (pF)
V660LA10	10	660L	660	850	70	2500	940	1210	1820	25	70
V660LA50A	14	660L50	660	850	140	4500	940	1210	1820	50	200
V660LA100B	20	660L100	660	850	250	6500	940	1100	1650	100	400
V1000LA80A	14	1000L80	1000	1200	220	4500	1425	1800	2700	50	130
V1000LA160B	20	1000L160	1000	1200	360	6500	1425	1600	2420	100	250

NOTE: Average power dissipation of transients not to exceed 0.25W, 0.4W, 0.6W or 1W for model sizes 7mm, 10mm, 14mm and 20mm, respectively.

Power Dissipation Ratings

Should transients occur in rapid succession, the average power dissipation is the energy (watt-seconds) per pulse times the number of pulses per second. The power so developed must be within the specifications shown on the Device Ratings and Specifications table for the specific device.The operating values of a MOV need to be derated at high temperatures as shown in Figure 1. Because varistors only dissipate a relatively small amount of average power they are not suitable for repetitive applications that involve substantial amounts of average power dissipation.

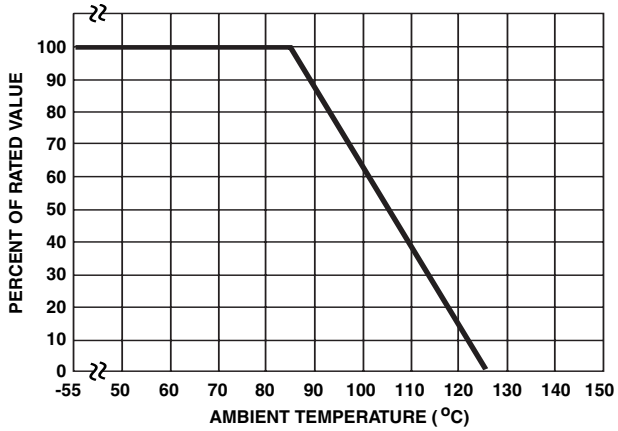

FIGURE 1. CURRENT, ENERGY AND POWER DERATING CURVE

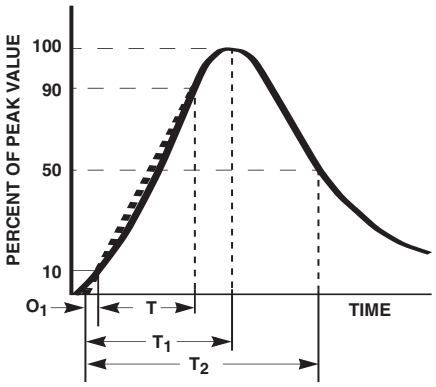

O_1 = Virtual Origin of Wave
T = Time From 10% to 90% of Peak
T_1 = Virtual Front time = 1.25 • t
T_2 = Virtual Time to Half Value (Impulse Duration)
Example: For an 8/20µs Current Waveform:
8µs = T_1 = Virtual Front Time
20µs = T_2 = Virtual Time to Half Value

FIGURE 2. PEAK PULSE CURRENT TEST WAVEFORM

LA Varistor Series

Transient V-I Characteristics Curves

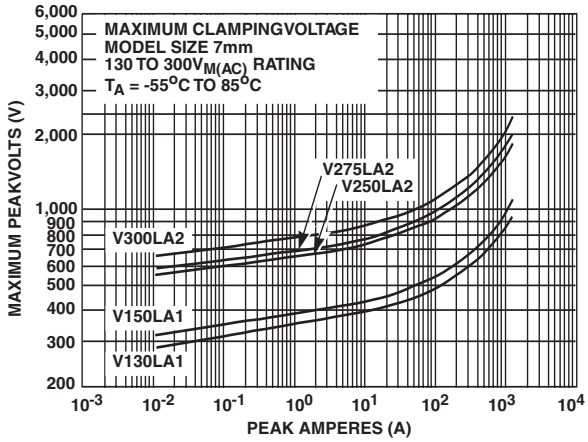

FIGURE 3. CLAMPING VOLTAGE FOR V130LA1 - V300LA2

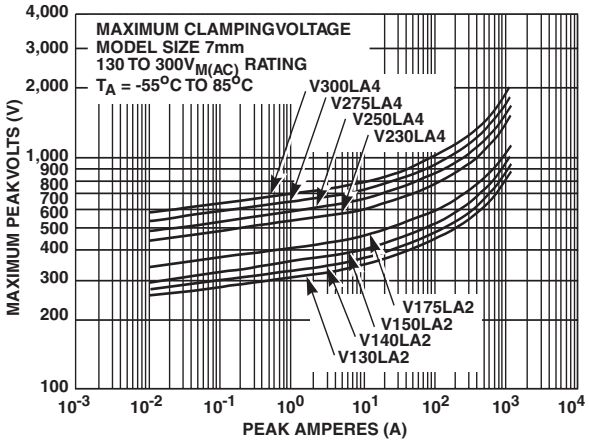

FIGURE 4. CLAMPING VOLTAGE FOR V130LA2 - V300LA4

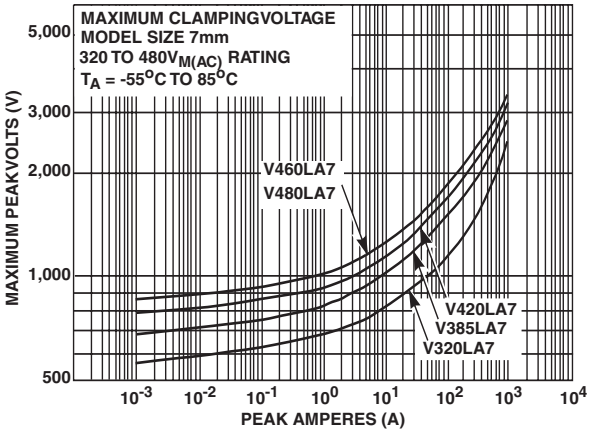

FIGURE 5. CLAMPING VOLTAGE FOR V320LA7 - V480LA7

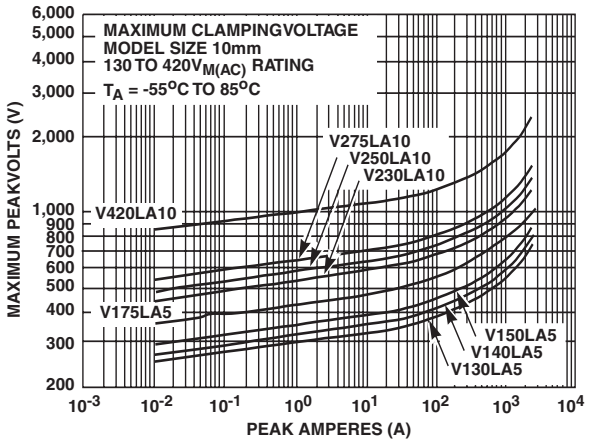

FIGURE 6. CLAMPING VOLTAGE FOR V130LA5 - V420LA10

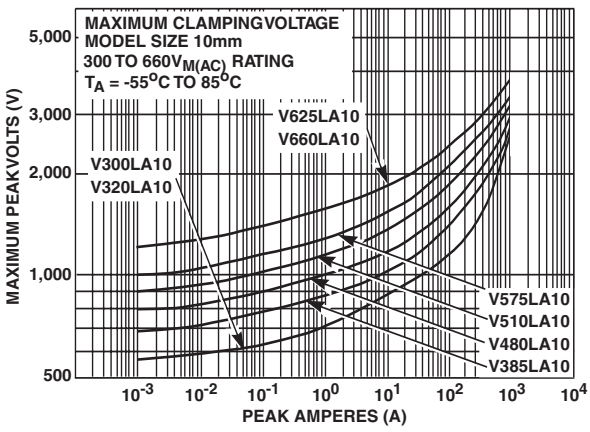

FIGURE 7. CLAMPING VOLTAGE FOR V300LA10 - V660LA10

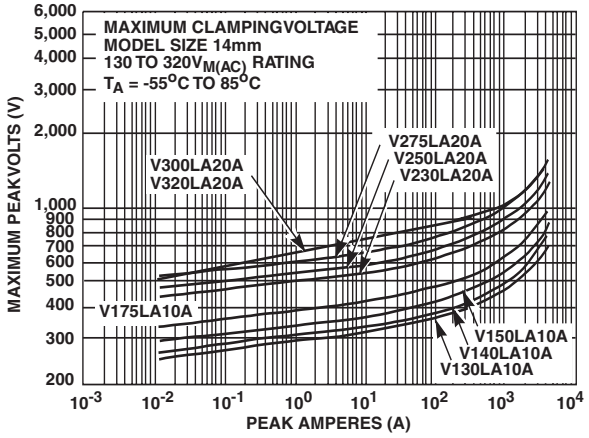

FIGURE 8. CLAMPING VOLTAGE FOR V130LA10A - V320LA20A

LA Varistor Series

Transient V-I Characteristics Curves (Continued)

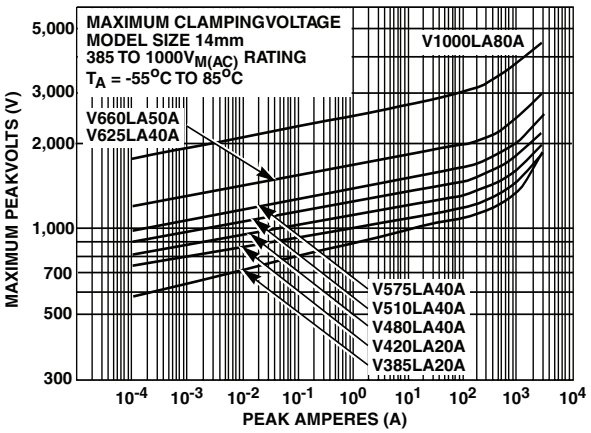

FIGURE 9. CLAMPING VOLTAGE FOR V385LA20A - V1000LA80A

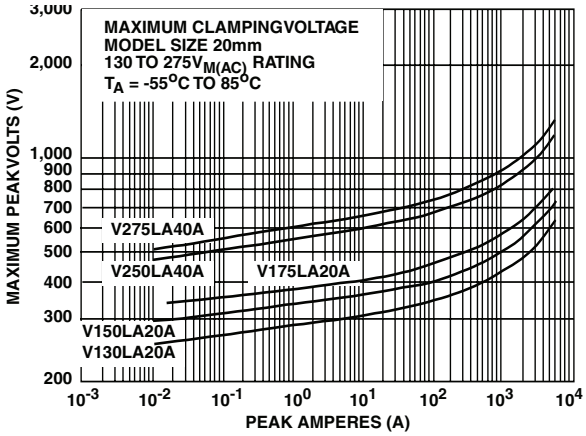

FIGURE 10. CLAMPING VOLTAGE FOR V130LA20A - V275LA40A

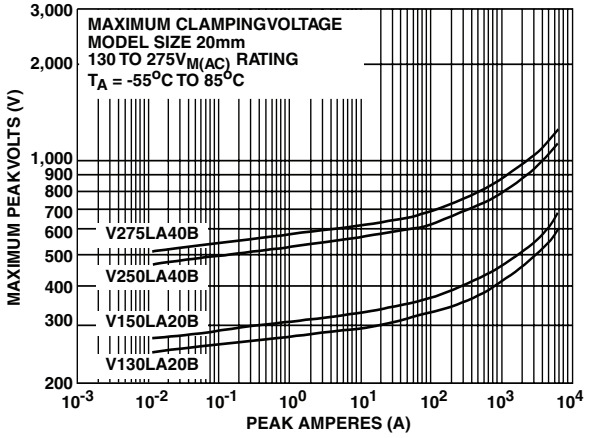

FIGURE 11. CLAMPING VOLTAGE FOR V130LA20B - V275LA40B

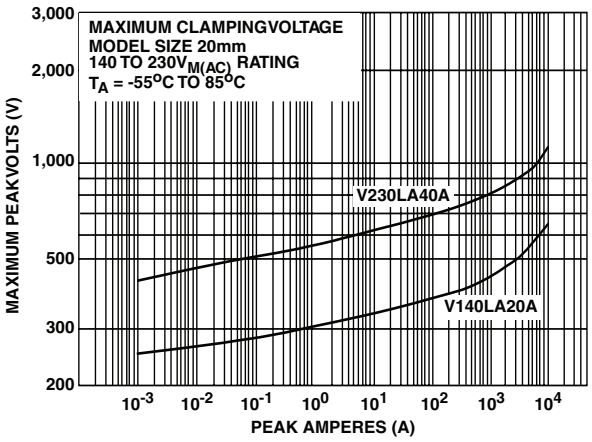

FI GURE 12. CLAMPING VOLTAGE FOR V140LA20A - V230LA40A

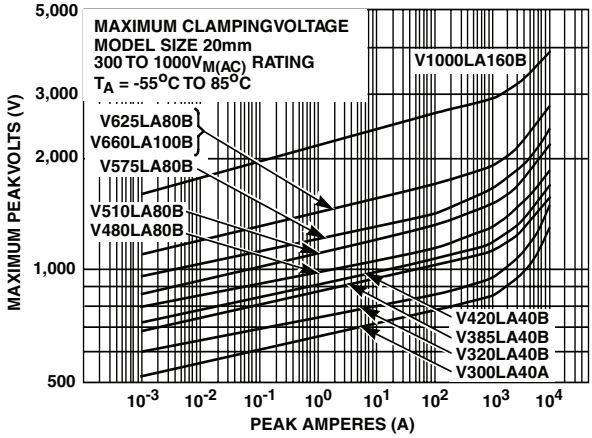

FIGURE 13. CLAMPING VOLTAGE FOR V300LA40A - V1000LA160B

LA Varistor Series

Pulse Rating Curves

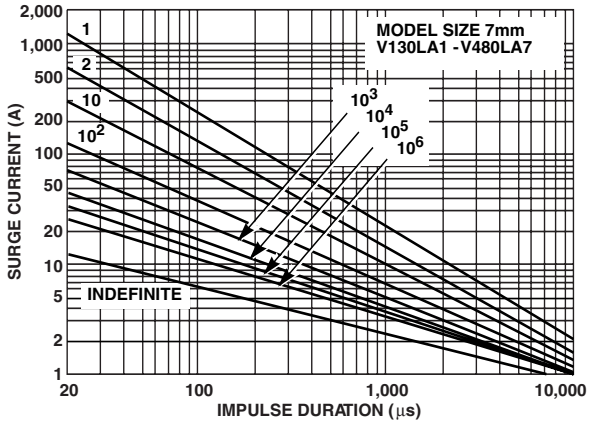

FIGURE 14. SURGE CURRENT RATING CURVES FOR V130LA1 - V480LA7

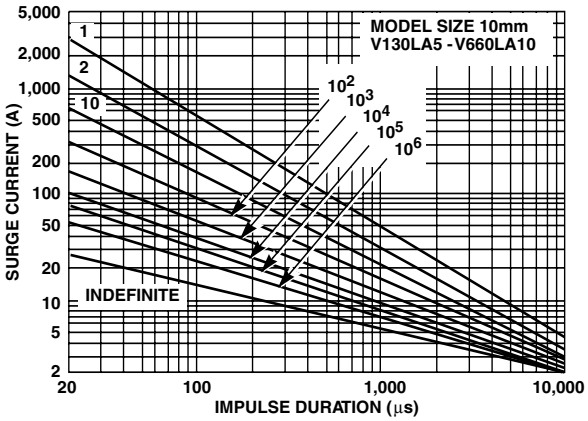

FIGURE 15. SURGE CURRENT RATING CURVES FOR V130LA5 - V660LA10

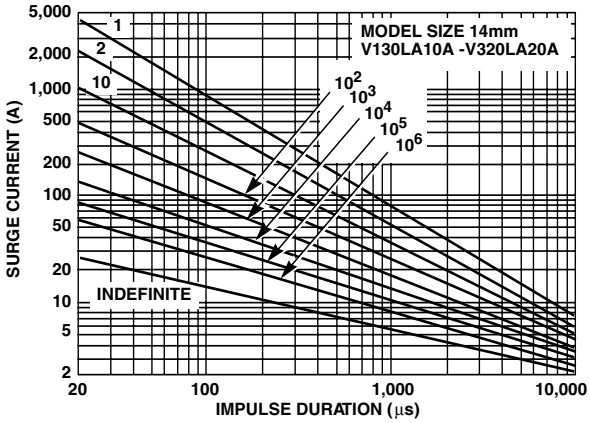

FIGURE 16. SURGE CURRENT RATING CURVES FOR V130LA10A - V320LA20A

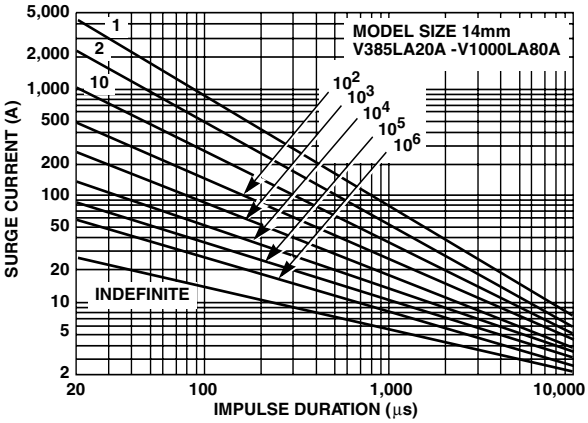

FIGURE 17. SURGE CURRENT RATING CURVES FOR V385LA20A - V1000LA80A

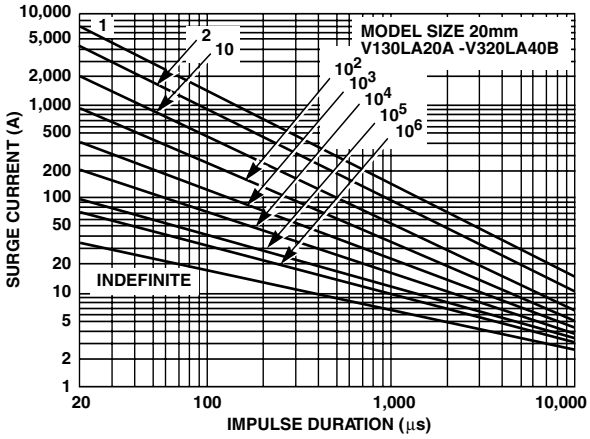

FIGURE 18. SURGE CURRENT RATING CURVES FOR V130LA20A - V320LA40B

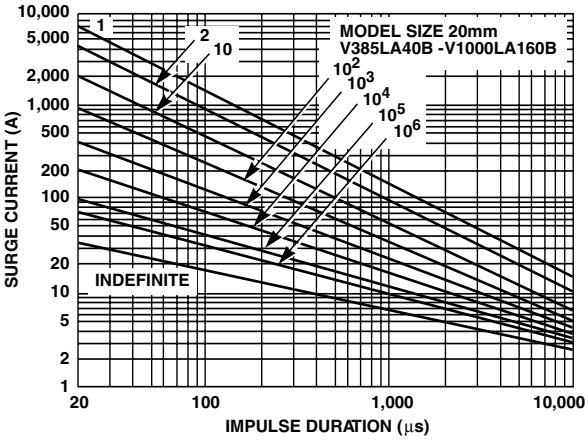

FIGURE 19. SURGE CURRENT RATING CURVES FOR V385LA40B - V1000LA160B

NOTE: If pulse ratings are exceeded, a shift of $V_{N(DC)}$ (at specified current) of more than ±10% could result. This type of shift, which normally results in a decrease of $V_{N(DC)}$, may result in the device not meeting the original published specifications, but does not prevent the device from continuing to function, and to provide ample protection.

LA Varistor Series

Tape and Reel Specifications

7mm Devices

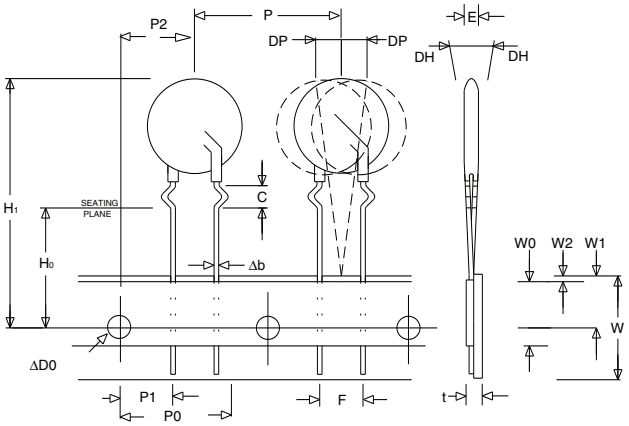

Crimped Leads "LT"

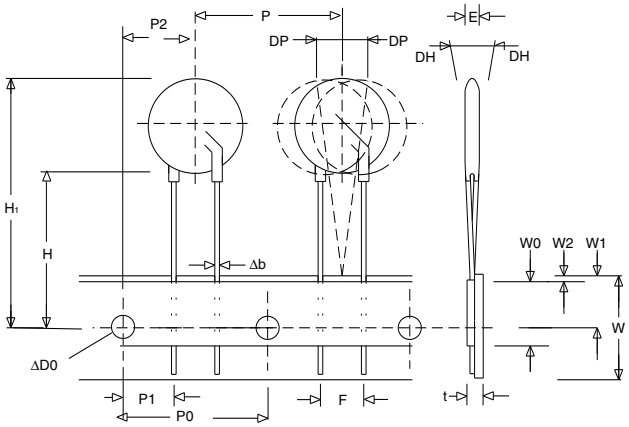

Straight Leads "LS"

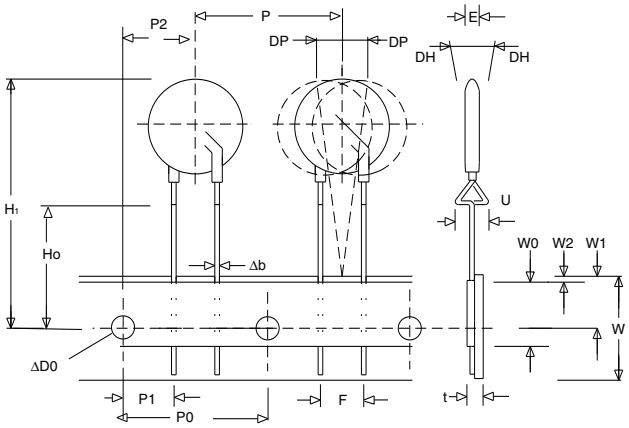

Under-crimped Leads "LU"

10, 14 and 20mm Devices

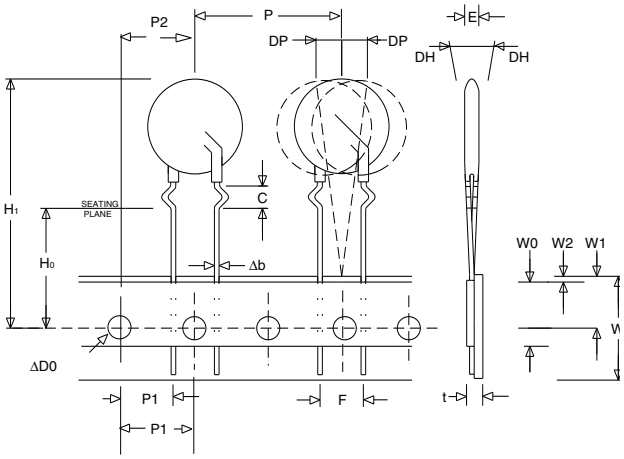

Crimped Leads "LT"

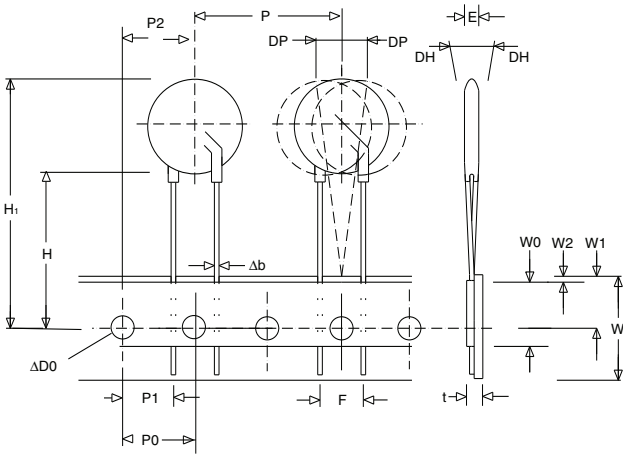

Straight Leads "LS"

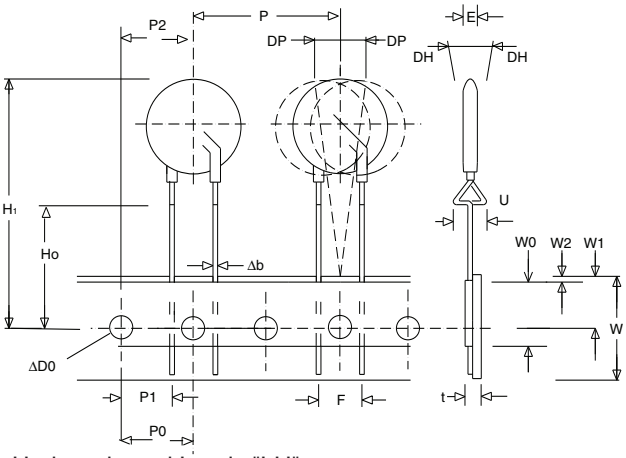

Under-crimped Leads "LU"

LA Varistor Series

SYMBOL	PARAMETER	MODEL SIZE			
		7mm	10mm	14mm	20mm
P	Pitch of Component	12.7 ± 1.0	25.4 ± 1.0	25.4 ± 1.0	25.4 ± 1.0
P_0	Feed Hole Pitch	12.7 ± 0.2	12.7 ± 0.2	12.7 ± 0.2	12.7 ± 0.2
P_1	Feed Hole Center to Pitch	3.85 ± 0.7	8.85 ± 0.7	8.85± 0.7	8.85± 0.7
P_2	Hole Center to Component Center	6.35 ± 0.7	12.7 ± 0.7	12.7± 0.7	12.7± 0.7
F	Lead to Lead Distance	5.0 ± 0.8	7.5 ± 0.8	7.5 ± 0.8	7.5 ± 0.8
h	Component Alignment	2.0 Max	2.0 Max	2.0 Max	2.0 Max
W	Tape Width	18.0 + 1.0 18.0 - 0.5	18.0 + 1.0 18.0 - 0.5	18.0 + 1.0 18.0 - 0.5	18.0 + 1.0 18.0 - 0.5
W_0	Hold Down Tape Width	12.0± 0.3	12.0 ± 0.3	12.0± 0.3	12.0 ± 0.3
W_1	Hole Position	9.0 + 0.75 9.0 - 0.50	9.0 + 0.75 9.0 - 0.50	9.0 + 0.75 9.0 - 0.50	9.0 + 0.75 9.0 - 0.50
W_2	Hold Down Tape Position	0.5 Max	0.5 Max	0.5 Max	0.5 Max
H	Height from Tape Center to Component Base	18.0 + 2.0 18.0 - 0.0	18.0 + 2.0 18.0 - 0.0	18.0 + 2.0 18.0 - 0.0	18.0 + 2.0 18.0 - 0.0
H_0	Seating Plane Height	16.0 ± 0.5	16.0 ± 0.5	16.0 ± 0.5	16.0 ± 0.5
H_1	Component Height	32.0 Max	36.0 Max	40.0 Max	46.5 Max
D_0	Feed Hole Diameter	4.0 ± 0.2	4.0 ± 0.2	4.0 ± 0.2	4.0 ± 0.2
t	Total Tape Thickness	0.7 ± 0.2	0.7 ± 0.2	0.7 ± 0.2	0.7 ± 0.2
U	Under-crimp Width	8.0 Max	8.0 Max	8.0 Max	8.0 Max
p	Component Alignment	3° Max 1.00mm	3° Max 1.00mm	3° Max 1.00mm	3° Max

NOTE: Dimensions are in mm.

Tape and Reel Data

- Conforms to ANSI and EIA specifications
- Can be supplied to IEC Publication 286-2
- Radial devices on tape are supplied with crimped leads, straight leads, or under-crimped leads

LA Varistor Series

Tape and Reel Ordering Information

Crimped leads are standard on LA types supplied in tape and reel and are denoted by the model letter "T". Model letter "S" denotes straight leads and letter "U" denotes special under-crimped leads.

Example:

STANDARD MODEL	CRIMPED LEADS	STRAIGHT LEADS	UNDER-CRIMPED LEADS
V130LA2	V130LT2	V130LS2	V130LU2

Standard Bulk Pack Quantity

VARISTOR VOLTAGE MODEL	STANDARD BULK PACK QUANTITY			
	VARISTOR MODEL SIZE			
	7mm	10mm	14mm	20mm
130-275	1500	1000	700	500
300-460	1500	700	600	400
510-625	1500	700	500	400

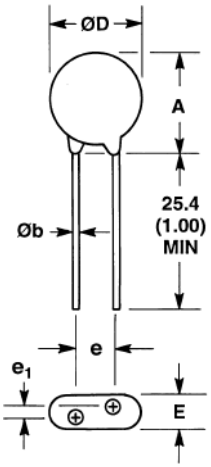

SYMBOL	VOLTAGE MODEL	VARISTOR MODEL SIZE							
		7mm		10mm		14mm		20mm	
		MIN	MAX	MIN	MAX	MIN	MAX	MIN	MAX
A	V130LA- V320LA	- -	12 (0.472)	- -	16 (0.630)	- -	20 (0.787)	- -	26.5 (1.043)
	V385LA- V1000LA	- -	13 (0.0512)	- -	17 (0.689)	- -	20.5 (0.807)	- -	28 (1.102)
ØD	All	- -	9 (0.354)	- -	12.5 (0.492)	- -	17 (0.669)	- -	23 (0.906)
e	All	4 (0.157)	6 (0.236)	6.5 (0.256)	8.5 (0.335)	6.5 (0.256)	8.5 (0.335)	6.5 (0.256) (Note 2)	8.5 (0.335) (Note 2)
e_1	V130LA- V320LA	1.5 (0.059)	3.5 (0.138)	1.5 (0.059)	3.5 (0.138)	1.5 (0.059)	3.5 (0.138)	1.5 (0.059)	3.5 (0.138)
	V385A- V1000LA	2.5 (0.098)	5.5 (0.217)	2.5 (0.098)	5.5 (0.217)	2.5 (0.098)	5.5 (0.217)	2.5 (0.098)	5.5 (0.217)
E	V130LA- V320LA	- -	5.6 (0.220)	- -	5.6 (0.220)	- -	5.6 (0.220)	- -	5.6 (0.220)
	V385LA- V660LA	- -	7.5 (0.287)	- -	7.5 (0.287)	- -	7.5 (0.287)	- -	7.5 (0.287)
	V1000LA	- -	- -	- -	- -	- -	10.8 (0.425)	- -	10.8 (0.425)
Øb	All (Note 3)	0.585 (0.023)	0.685 (0.027)	0.76 (0.030)	0.86 (0.034)	0.76 (0.030)	0.86 (0.034)	0.76 (0.030) (Note 2)	0.86 (0.034) (Note 2)

NOTES:

1. Dimensions in millimeters, inches in parentheses.
2. 10mm (9mm min, 11mm Max) ALSO AVAILABLE; See Additional Lead Style Options
3. 1000V parts supplied with lead wire of diameter 1.00 ± 0.05 (0.039 ± 0.002).

LA Varistor Series

Additional Lead Style Options

Radial lead types can be supplied with combination preformed crimp and trimmed leads. This option is supplied to the dimensions shown.

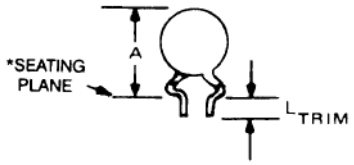

*Seating plane interpretation per IEC-717

CRIMPED AND TRIMMED LEAD

SYMBOL	VARISTOR MODEL SIZE							
	7mm		10mm		14mm		20mm	
	MIN	MAX	MIN	MAX	MIN	MAX	MIN	MAX
A	- -	15 (0.591)	- -	19.5 (0.768)	- -	22.5 (0.886)	- -	29.0 (1.142)
L_{TRIM}	2.41 (0.095)	4.69 (0.185)	2.41 (0.095)	4.69 (0.185)	2.41 (0.095)	4.69 (0.185)	2.41 (0.095)	4.69 (0.185)

NOTE: Dimensions in millimeters, inches in parentheses.

- To order this crimped and trimmed lead style, standard radial type model numbers are changed by replacing the model letter “A” with “C”.

Example:

STANDARD CATALOG MODEL	ORDER AS:
V130LA2	V130LC2

For crimped leads without trimming and any variations to the above, contact Littelfuse.

- For 10/±1mm lead spacing on 20mm diameter models only; append standard model numbers by adding “X10”.

Example:

STANDARD CATALOG MODEL	ORDER AS:
V130LA20A	V130LA20AX10

LA series varistors for Hi-Temperature operating conditions:

- Phenolic Coated LA Series devices are available with improved maximum operating maximum temperature 125°C.
- These devices also have improved temperature cycling performance capability.
- Ratings and Specifications are as per standard LA Series except Hi-Pot encapsulation Isolation Voltage Capability = 500V.
- To order: add X1347 to part number (e.g. V230LA20AX1347)
- Marked identifier will contain 'P' to denote Phenolic.
- These devices are not UL, CSA, VDE or CECC certified.
- Contact factory for further details.

Ordering Information

LA series Varistors are shipped standard in bulk pack with straight leads and lead spacing outlined in the package dimensions on page 4-13. Contact your Littelfuse sales representative to discuss the non-standard options outlined below.

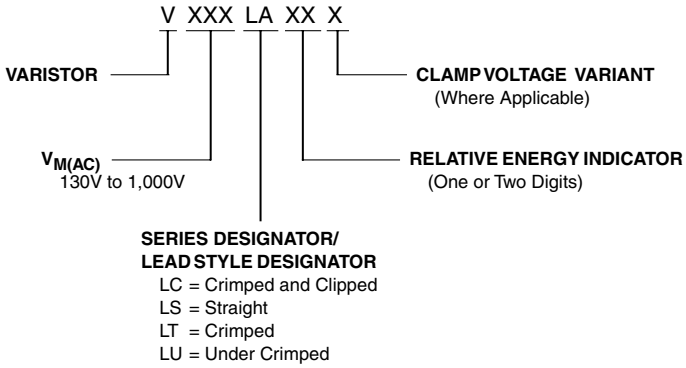

OCEAN CHIPS
Океан Электроники
Поставка электронных компонентов

Компания «Океан Электроники» предлагает заключение долгосрочных отношений при поставках импортных электронных компонентов на взаимовыгодных условиях!

Наши преимущества:

- Поставка оригинальных импортных электронных компонентов напрямую с производств Америки, Европы и Азии, а так же с крупнейших складов мира;
- Широкая линейка поставок активных и пассивных импортных электронных компонентов (более 30 млн. наименований);
- Поставка сложных, дефицитных, либо снятых с производства позиций;
- Оперативные сроки поставки под заказ (от 5 рабочих дней);
- Экспресс доставка в любую точку России;
- Помощь Конструкторского Отдела и консультации квалифицированных инженеров;
- Техническая поддержка проекта, помощь в подборе аналогов, поставка прототипов;
- Поставка электронных компонентов под контролем ВП;
- Система менеджмента качества сертифицирована по Международному стандарту ISO 9001;
- При необходимости вся продукция военного и аэрокосмического назначения проходит испытания и сертификацию в лаборатории (по согласованию с заказчиком);
- Поставка специализированных компонентов военного и аэрокосмического уровня качества (Xilinx, Altera, Analog Devices, Intersil, Interpoint, Microsemi, Actel, Aeroflex, Peregrine, VPT, Syfer, Eurofarad, Texas Instruments, MS Kennedy, Miteq, Cobham, E2V, MA-COM, Hittite, Mini-Circuits, General Dynamics и др.);

Компания «Океан Электроники» является официальным дистрибьютором и эксклюзивным представителем в России одного из крупнейших производителей разъемов военного и аэрокосмического назначения **«JONHON»**, а так же официальным дистрибьютором и эксклюзивным представителем в России производителя высокотехнологичных и надежных решений для передачи СВЧ сигналов **«FORSTAR»**.

AVIC JONHON

«JONHON» (основан в 1970 г.)

Разъемы специального, военного и аэрокосмического назначения:

(Применяются в военной, авиационной, аэрокосмической, морской, железнодорожной, горно- и нефтедобывающей отраслях промышленности)

«FORSTAR» (основан в 1998 г.)

ВЧ соединители, коаксиальные кабели, кабельные сборки и микроволновые компоненты:

(Применяются в телекоммуникациях гражданского и специального назначения, в средствах связи, РЛС, а так же военной, авиационной и аэрокосмической отраслях промышленности).

FORSTAR®

Телефон: 8 (812) 309-75-97 (многоканальный)
Факс: 8 (812) 320-03-32
Электронная почта: ocean@oceanchips.ru
Web: http://oceanchips.ru/
Адрес: 198099, г. Санкт-Петербург, ул. Калинина, д. 2, корп. 4, лит. А