FPGA Configuration E^{2}PROM

65K, 128K and 256K

AT17C65
AT17C128
AT17C256

Features

- **E^2 Programmable 65,536 x 1, 131,072 x 1, and 262,144 x 1 bit Serial Memories Designed To Store Configuration Programs For Programmable Gate Arrays**
- **Simple Interface to SRAM FPGAs Requires Only One User I/O Pin**
- **Compatible With AT6000 FPGAs, ATT3000 FPGA, EPF8000 FPGAs, ORCA FPGAs, XC2000, XC3000, XC4000, XC5000 FPGAs, MPA1000**
- **Cascadable To Support Additional Configurations or Future Higher-density Arrays (17C128 and 17C256 only)**
- **Low-power CMOS EEPROM Process**
- **Programmable Reset Polarity**
- **Available In the Space-efficient Plastic DIP or Surface-mount PLCC and SOIC Packages**
- **In-System Programmable Via 2-Wire Bus**
- **Emulation of 24CXX Serial EPROMs**
- **Available in 3.3V ± 10% LV Version**

Description

The AT17C65/128/256 and AT17LV65/128/256 (AT17 Series) FPGA Configuration EEPROMS (Configurator) provide an easy-to-use, cost-effective configuration memory for Field Programmable Gate Arrays. The AT17 Series is packaged in the 8-pin DIP and the popular 20-pin PLCC and SOIC. The AT17 Series family uses a simple serial-access procedure to configure one or more FPGA devices. The AT17 Series organization supplies enough memory to configure one or multiple smaller FPGAs. Using a special feature of the AT17 Series, the user can select the polarity of the reset function by programming a special EEPROM bit.

The AT17 Series can be programmed with industry standard programmers.

Pin Configurations

20-pin PLCC

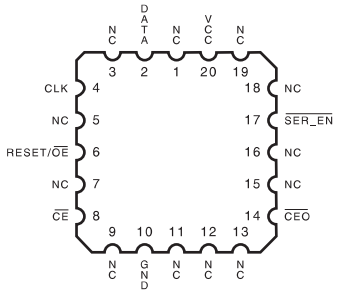

20-Pin SOIC

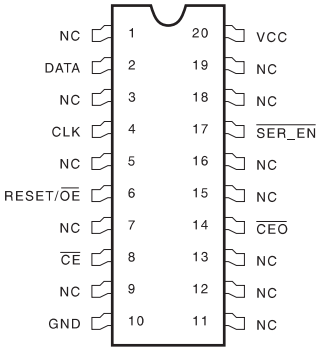

8-Pin DIP

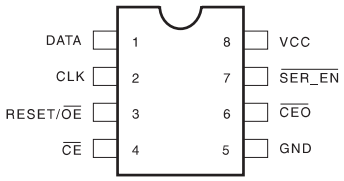

0391E-A–5/97

Controlling The AT17 Series Serial EEPROMs

Most connections between the FPGA device and the Serial EEPROM are simple and self-explanatory.

- The DATA output of the AT17 Series drives DIN of the FPGA devices.
- The master FPGA CCLK output drives the CLK input of the AT17 Series.
- The $\overline{CEO}$ output of any AT17C/LV128/256 drives the $\overline{CE}$ input of the next AT17C/LV128/256 in a cascade chain of PROMs.
- $\overline{SER_EN}$ must be connected to V_{CC}.

There are, however, two different ways to use the inputs $\overline{CE}$ and $\overline{OE}$, as shown in the AC Characteristics waveforms.

Condition 1

The simplest connection is to have the FPGA D/$\overline{P}$ output drive both $\overline{CE}$ and RESET/$\overline{OE}$ in parallel (Figure 1). Due to its simplicity, however, this method will fail if the FPGA receives an external reset condition during the configuration cycle. If a system reset is applied to the FPGA, it will abort the original configuration and then reset itself for a new configuration, as intended. Of course, the AT17 Series does not see the external reset signal and will not reset its internal address counters and, consequently, will remain out of sync with the FPGA for the remainder of the configuration cycle.

Condition 2

The FPGA D/$\overline{P}$ output drives only the $\overline{CE}$ input of the AT17 Series, while its $\overline{OE}$ input is driven by the inversion of the input to the FPGA $\overline{RESET}$ input pin. This connection works under all normal circumstances, even when the user aborts a configuration before D/$\overline{P}$ has gone High. A High level on the RESET/$\overline{OE}$ input to the AT17C/LVxxx – during FPGA reset – clears the Configurator's internal address pointer, so that the reconfiguration starts at the beginning. The AT17 Series does not require an inverter since the RESET polarity is programmable.

Block Diagram

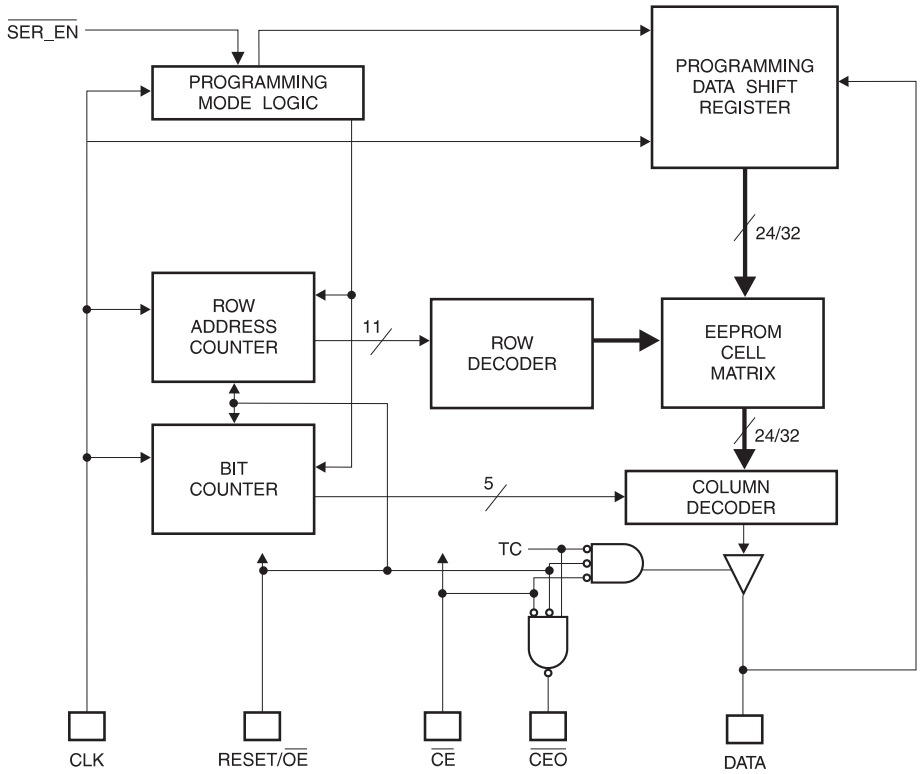

Pin Configurations

PLCC/ SOIC	DIP			
Pin	**Pin**	**Name**	**I/O**	**Description**
2	1	DATA	I/O	Three-state DATA output for reading. Input/Output pin for programming.
4	2	CLK	I	Clock input. Used to increment the internal address and bit counter for reading and programming.
6	3	RESET/$\overline{OE}$		RESET/Output Enable input (when $\overline{SER_EN}$ is High). A Low level on both the $\overline{CE}$ and RESET/$\overline{OE}$ inputs enables the data output driver. A High level on RESET/$\overline{OE}$ resets both the addresss and bit counters. A logic polarity of this input is programmable as either RESET/$\overline{OE}$ or $\overline{RESET}$/OE. This document describes the pin as RESET/$\overline{OE}$.
8	4	$\overline{CE}$	I	Chip Enable input. Used for device selection. A Low level on both $\overline{CE}$ and $\overline{OE}$ enables the data output driver. A High level on $\overline{CE}$ disables both the address and bit counters and forces te device into a low power mode. Note this pin will not enable/disable the device in 2-wire Serial mode (ie; when $\overline{SER_EN}$ is Low).
10	5	GND		Ground Pin
14	6	$\overline{CEO}$	O	Chip Enable Out output. This signal is asserted Low on the clock cycle following the last bit read from the memory. It will stay Low as long as CE and $\overline{OE}$ are both Low. It will then follow $\overline{CE}$ until $\overline{OE}$ goes High. Thereafter $\overline{CEO}$ will stay High until the entire PROM is read again and senses the status of RESET polarity.
		A2	I	Device selection input, A2. This is used to enable (or select) the device during programming and when $\overline{SER_EN}$ is Low (see Programming Guide for more details).
17	7	$\overline{SER_EN}$	I	Serial enable is normally high during FPGA loading operations. Bringing SER_EN low, enables the 2-wire serial interface for programming.
20	8	V_{CC}		+3.3V/+5V power supply pin.

Absolute Maximum Ratings*

Operating Temperature..... -55°C to +125°C

Storage Temperature..... -65°C to +150°C

Voltage on Any Pin
with Respect to Ground..... -0.1V to V_{CC} + 0.5V

Supply Voltage (Vcc) ..... -0.5 V to +7.0V

Maximum Soldering Temp. (10 sec. @ 1/16 in.)... 260°C

ESD (R_{ZAP} = 1.5K, C_{ZAP} = 100pF) 2000V

*NOTICE: Stresses beyond those listed under “Absolute Maximum Ratings” may cause permanent damage to the device. This is a stress rating only and functional operation of the device at these or any other conditions beyond those indicated in the operational sections of this specification is not implied. Exposure to absolute maximum rating conditions for extended periods may affect device reliability.

FPGA Master Serial Mode Summary

The I/O and logic functions of the FPGA and their associated interconnections are established by a configuration program. The program is loaded either automatically upon power up, or on command, depending on the state of the three FPGA mode pins. In Master Mode, the FPGA automatically loads the configuration program from an external memory. The Serial Configuration EEPROM has been designed for compatibility with the Master Serial Mode.

Cascading Serial Configuration EEPROMs (AT17C/LV128 and AT17C/LV256)

For multiple FPGAs configured as a daisy-chain, or for future FPGAs requiring larger configuration memories, cascaded Configurators provide additional memory (17C/LV128 and 17C/LV256 only).

After the last bit from the first Configurator is read, the next clock signal to the Configurator asserts its $\overline{CEO}$ output Low and disables its DATA line. The second Configurator recognizes the Low level on its $\overline{CE}$ input and enables its DATA output.

Figure 1. Condition 1 Connection

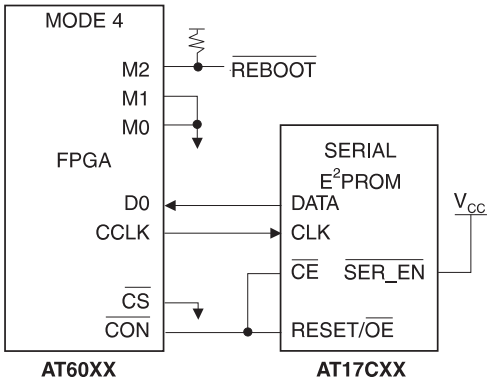

After configuration is complete, the address counters of all cascaded Configurators are reset if the reset signal drives the RESET/$\overline{OE}$ on each Configurator Active.

If the address counters are not to be reset upon completion, then the RESET/$\overline{OE}$ inputs can be tied to ground. For more details, please reference the AT17C Series Programming Guide.

Programming Mode

The programming mode is entered by bringing $\overline{SER_EN}$ Low. In this mode the chip can be programmed by the 2-wire interface. The programming is done at V_{CC} supply only. Programming super voltages are generated inside the chip. See the Programming Specification for Atmel's Configuration Memories Application Note for further information. The AT17C Series parts are read/write at 5V nominal. The AT17LV parts are read/write at 3.0V nominal.

AT17C/LVXXX Reset Polarity

The AT17C/LVXXX lets the user choose the reset polarity as either RESET/$\overline{OE}$ or $\overline{RESET}$/OE.

Standby Mode

The AT17C/LVXXX enters a low-power standby mode whenever $\overline{CE}$ is asserted High. In this mode, the Configurator consumes less than 1.0 mA of current. The output remains in a high impedance state regardless of the state of the $\overline{OE}$ input.

Operating Conditions

Symbol	Description		AT17CXXX Min/Max	AT17LVXXX Min/Max	Units
V_{CC}	Commercial	Supply voltage relative to GND -0°C to +70°C	4.75/5.25	3.0/3.6	V
	Industrial	Supply voltage relative to GND -40°C to +85C°	4.5/5.5	3.0/3.6	V
	Military	Supply voltage relative to GND -55°C to +125C	4.5/5.5	3.0/3.6	V

DC Characteristics

V_{CC} = 5V ± 5% Commercial / 5V ± 10% Ind./Mil.

Symbol	Description		Min	Max	Units
V_{IH}	High-level input voltage		2.0	V_{CC}	V
V_{IL}	Low-level input voltage		0	0.8	V
V_{OH}	High-level output voltage (I_{OH} = -4 mA)	Commercial	3.7		V
V_{OL}	Low-level output voltage (I_{OL} = +4 mA)			0.32	V
V_{OH}	High-level output voltage (I_{OH} = -4 mA)	Industrial	3.6		V
V_{OL}	Low-level output voltage (I_{OL} = +4 mA)			0.37	V
V_{OH}	High-level output voltage (I_{OH} = -4 mA)	Military	3.5		V
V_{OL}	Low-level output voltage (I_{OL} = +4 mA)			0.4	V
I_{CCA}	Supply current, active mode			10	mA
I_L	Input or output leakage current (V_{IN} = V_{CC} or GND)		-10	10	µA
I_{CCS}	Supply current, standby mode AT17C256	Commercial		75	µA
		Industrial/Military		150	µA
	Supply current, standby mode AT17C128/65	Commercial		1	mA
		Industrial/Military		2	mA

DC Characteristics

V_{CC} = 3.3V ± 10%

Symbol	Description		Min	Max	Units
V_{IH}	High-level input voltage		2.0	V_{CC}	V
V_{IL}	Low-level input voltage		0	0.8	V
V_{OH}	High-level output voltage (I_{OH} = -2.5 mA)	Commercial	2.4		V
V_{OL}	Low-level output voltage (I_{OL} = +3 mA)			0.4	V
V_{OH}	High-level output voltage (I_{OH} = -2 mA)	Industrial	2.4		V
V_{OL}	Low-level output voltage (I_{OL} = +3 mA)			0.4	V
V_{OH}	High-level output voltage (I_{OH} = -2 mA)	Military	2.4		V
V_{OL}	Low-level output voltage (I_{OL} = +2.5 mA)			0.4	V
I_{CCA}	Supply current, active mode			5	mA
I_L	Input or output leakage current (V_{IN} = V_{CC} or GND)		-10	10	µA
I_{CCS}	Supply current, standby mode	Commercial		50	µA
		Industrial/Military		100	µA

AC Characteristics

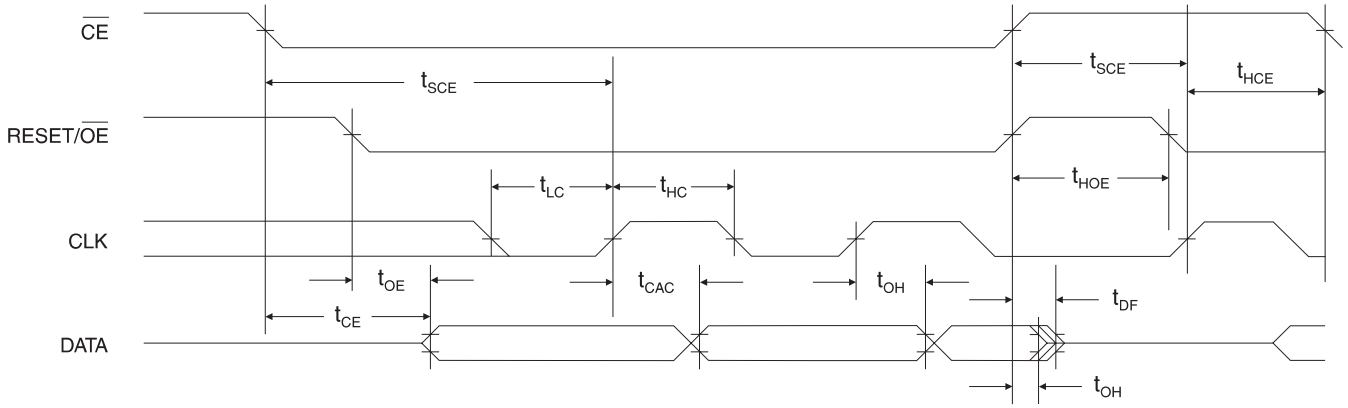

AC Characteristics When Cascading

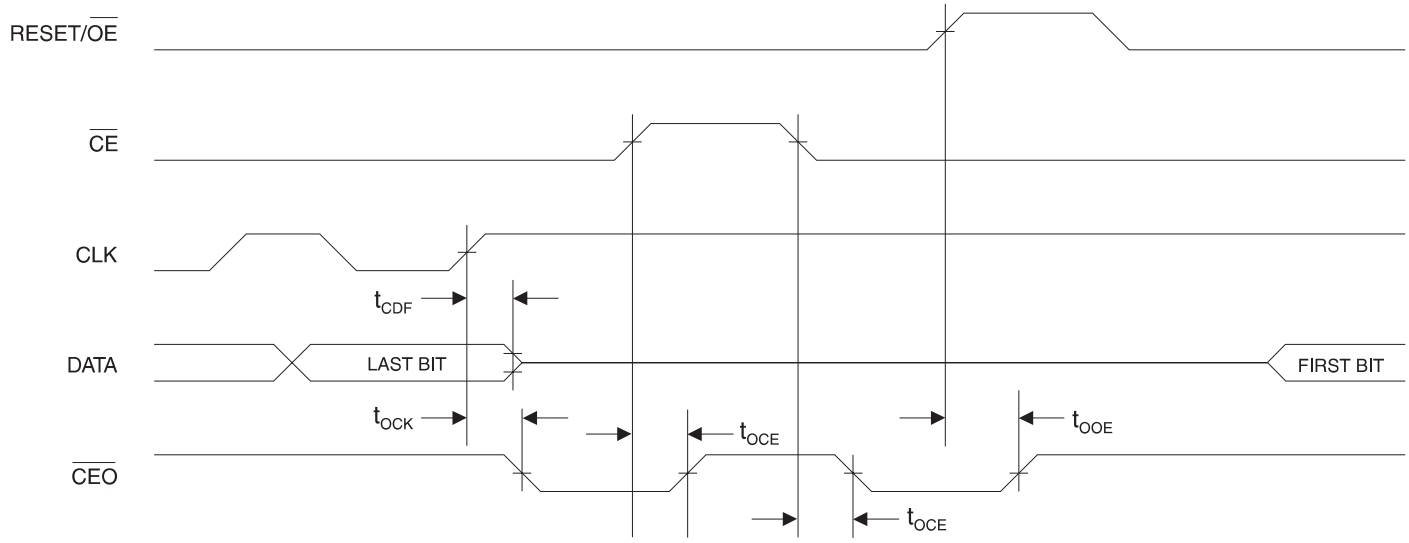

AC Characteristics for AT17C256

V_{CC} = 5V ± 5% Commercial / V_{CC} = 5V ± 10% Ind./Mil.

Symbol	Description	Commercial		Industrial/Military		Units
		Min	Max	Min	Max	
T_{OE}(2)	$\overline{OE}$ to Data Delay		25		25	ns
T_{CE}(2)	$\overline{CE}$ to Data Delay		45		45	ns
T_{CAC}(2)	CLK to Data Delay		50		55	ns
T_{OH}(2)	Data Hold From $\overline{CE}$, $\overline{OE}$, or CLK	0		0		ns
T_{DF}(3)	$\overline{CE}$ or $\overline{OE}$ to Data Float Delay		50		50	ns
T_{LC}	CLK Low Time	20		20		ns
T_{HC}	CLK High Time	20		20		ns
T_{SCE}	$\overline{CE}$ Setup Time to CLK (to guarantee proper counting)	35		40		ns
T_{HCE}	$\overline{CE}$ Hold Time to CLk (to guarantee proper counting)	0		0		ns
T_{HOE}	$\overline{OE}$ High Time (guarantees counter is reset)	20		20		ns
F_{MAX}	MAX Input Clock Frequency	12.5		12.5		MHz

AC Characteristics for AT17C256 When Cascading

V_{CC} = 5V± 5% Commercial / V_{CC} = 5V ± 10% Ind./Mil.

Symbol	Description	Commercial		Industrial/Military		Units
		Min	Max	Min	Max	
T_{CDF}(3)	CLK to Data Float Delay		50		50	ns
T_{OCK}(2)	CLK to $\overline{CEO}$ Delay		35		40	ns
T_{OCE}(2)	CE to $\overline{CEO}$ Delay		35		35	ns
T_{OOE}(2)	RESET/$\overline{OE}$ to $\overline{CEO}$ Delay		30		35	ns

Notes: 1. Preliminary specifications for military operating range only.
2. AC test load = 50 pf.
3. Float delays are measured with 5 pF AC loads. Transition is measured ±200 mV from steady state active levels.

AC Characteristics for AT17C65/128

V_{CC} = 5V ± 5% Commercial / V_{CC} = 5V ± 10% Ind./Mil.

Symbol	Description	Commercial		Industrial/Military		Units
		Min	Max	Min	Max	
T_{OE}(2)	$\overline{OE}$ to Data Delay		110		150	ns
T_{CE}(2)	$\overline{CE}$ to Data Delay		50		50	ns
T_{CAC}(2)	CLK to Data Delay		50		55	ns
T_{OH}(2)	Data Hold From $\overline{CE}$, $\overline{OE}$, or CLK	0		0		ns
T_{DF}(3)	$\overline{CE}$ or $\overline{OE}$ to Data Float Delay		50		50	ns
T_{LC}	CLK Low Time	30		35		ns
T_{HC}	CLK High Time	30		35		ns
T_{SCE}	$\overline{CE}$ Setup Time to CLK (to guarantee proper counting)	45		50		ns
T_{HCE}	$\overline{CE}$ Hold Time to CLk (to guarantee proper counting)	0		5		ns
T_{HOE}	$\overline{OE}$ High Time (guarantees counter is reset)	50		60		ns
F_{MAX}(4)	MAX Input Clock Frequency		10		10	MHz

AC Characteristics for AT17C65/128 When Cascading

V_{CC} = 5V± 5% Commercial / V_{CC} = 5V ± 10% Ind./Mil.

Symbol	Description	Commercial		Industrial/Military		Units
		Min	Max	Min	Max	
T_{CDF}(3)	CLK to Data Float Delay		50		50	ns
T_{OCK}(2)	CLK to $\overline{CEO}$ Delay		65		75	ns
T_{OCE}(2)	CE to $\overline{CEO}$ Delay		55		60	ns
T_{OE}(2)	RESET/$\overline{OE}$ to $\overline{CEO}$ Delay		55		55	ns

Notes:
1. Preliminary specifications for military operating range only.
2. AC test load = 50 pf.
3. Float delays are measured with 5 pF AC loads. Transition is measured ±200 mV from steady state active levels.
4. During cascade F_{MAX} = 8 MHz.

AC Characteristics

V_{CC} = 3.3V ± 10%

Symbol	Description	Commercial		Industrial/Military		Units
		Min	Max	Min	Max	
T_{OE}(2)	$\overline{OE}$ to Data Delay		40		45	ns
T_{CE}(2)	$\overline{CE}$ to Data Delay		60		60	ns
T_{CAC}(2)	CLK to Data Delay		75		80	ns
T_{OH}(2)	Data Hold From $\overline{CE}$, $\overline{OE}$, or CLK	0		0		ns
T_{DF}(3)	$\overline{CE}$ or $\overline{OE}$ to Data Float Delay		55		55	ns
T_{LC}	CLK Low Time	25		25		ns
T_{HC}	CLK High Time	25		25		ns
T_{SCE}	$\overline{CE}$ Setup Time to CLK (to guarantee proper counting)	35		60		ns
T_{HCE}	$\overline{CE}$ Hold Time to CLk (to guarantee proper counting)	0		0		ns
T_{HOE}	$\overline{OE}$ High Time (guarantees counter is reset)	25		25		ns
F_{MAX}(4)	MAX Input Clock Frequency	10		8	10	MHz

Notes:
1. Preliminary specifications for military operating range only.
2. AC test lead = 50 pf.
3. Float delays are measured with 5 pF AC loads. Transition is measured ±200 mV afrom steady state active levels.
4. During cascade F_{MAX} = 8 MHz.

AC Characteristics When Cascading

V_{CC} = 3.3V ± 10%

Symbol	Description	Commercial		Industrial/Military		Units
		Min	Max	Min	Max	
T_{CDF}(3)	CLK to Data Float Delay		60		60	ns
T_{OCK}(2)	CLK to $\overline{CEO}$ Delay		55		60	ns
T_{OCE}(2)	CE to $\overline{CEO}$ Delay		55		60	ns
T_{OOE}(2)	RESET/$\overline{OE}$ to $\overline{CEO}$ Delay		40		45	ns

Ordering Information - 5V Devices

Memory Size (K)	Ordering Code	Package	Operation Range
64K	AT17C65-10PC AT17C65-10JC AT17C65-10SC	8P3 20J 20S	Commercial (0°C to 70°C)
	AT17C65-10PI AT17C65-10JI AT17C65-10SI	8P3 20J 20S	Industrial (-40°C to 85°C)
128K	AT17C128-10PC AT17C128-10JC AT17C128-10SC	8P3 20J 20S	Commercial (0°C to 70°C)
	AT17C128-10PI AT17C128-10JI AT17C128-10SI	8P3 20J 20S	Industrial (-40°C to 85°C)
256K	AT17C256-10PC AT17C256-10JC AT17C256-10SC	8P3 20J 20S	Commercial (0°C to 70°C)
	AT17C256-10PI AT17C256-10JI AT17C256-10SI	8P3 20J 20S	Industrial (-40°C to 85°C)

Ordering Information - 3.3V Devices

Memory Size (K)	Ordering Code	Package	Operation Range
64K	AT17LV65-10PC AT17LV65-10JC AT17LV65-10SC	8P3 20J 20S	Commercial (0°C to 70°C)
	AT17LV65-10PI AT17LV65-10JI AT17LV65-10SI	8P3 20J 20S	Industrial (-40°C to 85°C)
128K	AT17LV128-10PC AT17LV128-10JC AT17LV128-10SC	8P3 20J 20S	Commercial (0°C to 70°C)
	AT17LV128-10PI AT17LV128-10JI AT17LV128-10SI	8P3 20J 20S	Industrial (-40°C to 85°C)
256K	AT17LV256-10PC AT17LV256-10JC AT17LV256-10SC	8P3 20J 20S	Commercial (0°C to 70°C)
	AT17LV256-10PI AT17LV256-10JI AT17LV256-10SI	8P3 20J 20S	Industrial (-40°C to 85°C)

Package Type	
8P3	8-Lead, 0.300" Wide, Plastic Dual Inline Package (PDIP)
20J	20-Lead, Plastic J-Leaded Chip Carrier (PLCC)
20S	20-Lead, 0.300" Wide, Plastic Gull Wing Small Outline (SOIC)

OCEAN CHIPS
Океан Электроники
Поставка электронных компонентов

Компания «Океан Электроники» предлагает заключение долгосрочных отношений при поставках импортных электронных компонентов на взаимовыгодных условиях!

Наши преимущества:

- Поставка оригинальных импортных электронных компонентов напрямую с производств Америки, Европы и Азии, а так же с крупнейших складов мира;
- Широкая линейка поставок активных и пассивных импортных электронных компонентов (более 30 млн. наименований);
- Поставка сложных, дефицитных, либо снятых с производства позиций;
- Оперативные сроки поставки под заказ (от 5 рабочих дней);
- Экспресс доставка в любую точку России;
- Помощь Конструкторского Отдела и консультации квалифицированных инженеров;
- Техническая поддержка проекта, помощь в подборе аналогов, поставка прототипов;
- Поставка электронных компонентов под контролем ВП;
- Система менеджмента качества сертифицирована по Международному стандарту ISO 9001;
- При необходимости вся продукция военного и аэрокосмического назначения проходит испытания и сертификацию в лаборатории (по согласованию с заказчиком);
- Поставка специализированных компонентов военного и аэрокосмического уровня качества (Xilinx, Altera, Analog Devices, Intersil, Interpoint, Microsemi, Actel, Aeroflex, Peregrine, VPT, Syfer, Eurofarad, Texas Instruments, MS Kennedy, Miteq, Cobham, E2V, MA-COM, Hittite, Mini-Circuits, General Dynamics и др.);

Компания «Океан Электроники» является официальным дистрибьютором и эксклюзивным представителем в России одного из крупнейших производителей разъемов военного и аэрокосмического назначения **«JONHON»**, а так же официальным дистрибьютором и эксклюзивным представителем в России производителя высокотехнологичных и надежных решений для передачи СВЧ сигналов **«FORSTAR»**.

AVIC JONHON

«JONHON» (основан в 1970 г.)

Разъемы специального, военного и аэрокосмического назначения:

(Применяются в военной, авиационной, аэрокосмической, морской, железнодорожной, горно- и нефтедобывающей отраслях промышленности)

«FORSTAR» (основан в 1998 г.)

ВЧ соединители, коаксиальные кабели, кабельные сборки и микроволновые компоненты:

(Применяются в телекоммуникациях гражданского и специального назначения, в средствах связи, РЛС, а так же военной, авиационной и аэрокосмической отраслях промышленности).

FORSTAR®

Телефон: 8 (812) 309-75-97 (многоканальный)
Факс: 8 (812) 320-03-32
Электронная почта: ocean@oceanchips.ru
Web: http://oceanchips.ru/
Адрес: 198099, г. Санкт-Петербург, ул. Калинина, д. 2, корп. 4, лит. А