Laser Diode Driver with Light Power Control

AD9661A

FEATURES
< 2 ns Rise/Fall Times
Output Current: 120 mA
Single +5 V Power Supply
Switching Rate: 200 MHz typ
Onboard Light Power Control Loop

APPLICATIONS
Laser Printers and Copiers

GENERAL DESCRIPTION

The AD9661A is a highly integrated driver for laser diode applications such as printers and copiers. The AD9661A gets feedback from an external photo detector and includes an analog feedback loop to allow users to set the power level of the laser, and switch the laser on and off at up to 100 MHz. Output rise and fall times are 2 ns to complement printer applications that use image enhancing techniques such as pulse width modulation to achieve gray scale and resolution enhancement. Control signals are TTL/CMOS compatible.

The driver output provides up to 120 mA of current into an infrared N type laser, and the onboard disable circuit turns off the output driver and returns the light power control loop to a safe state.

The AD9661A can also be used in closed-loop applications in which the output power level follows an analog POWER LEVEL voltage input. By optimizing the external hold capacitor and the photo detector, the loop can achieve bandwidths as high as 25 MHz.

The AD9661A is offered in a 28-pin plastic SOIC for operation over the commercial temperature range (0°C to +70°C).

FUNCTIONAL BLOCK DIAGRAM

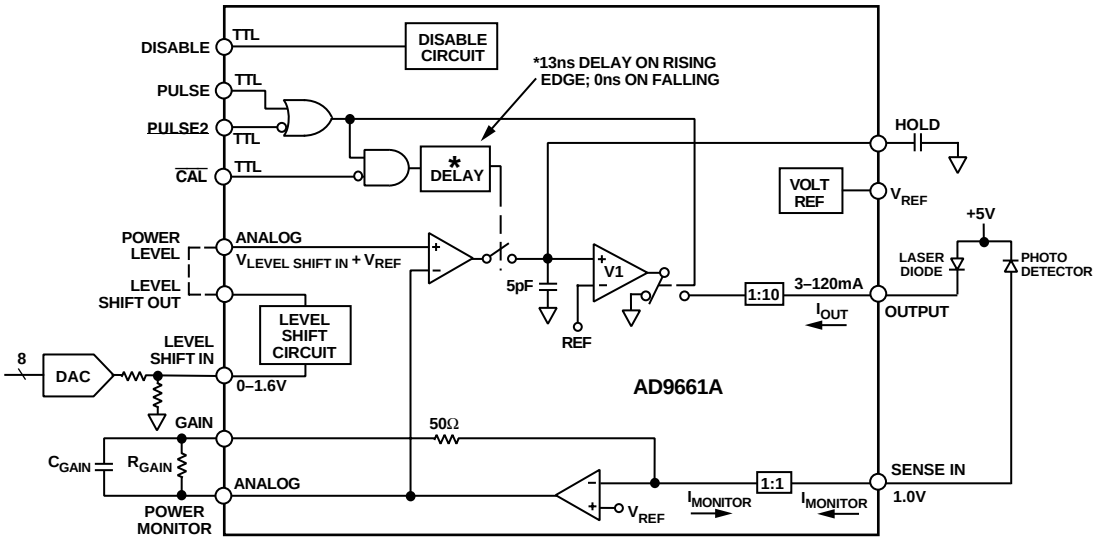

REV. 0

Information furnished by Analog Devices is believed to be accurate and reliable. However, no responsibility is assumed by Analog Devices for its use, nor for any infringements of patents or other rights of third parties which may result from its use. No license is granted by implication or otherwise under any patent or patent rights of Analog Devices.

© Analog Devices, Inc., 1995

One Technology Way, P.O. Box 9106, Norwood, MA 02062-9106, U.S.A.
Tel: 617/329-4700 **Fax: 617/326-8703**

AD9661A–SPECIFICATIONS ($+V_S$ = +5 V, Temperature = +25°C unless otherwise noted)

Parameter	Test Level	Temp	AD9661AKR Min	Typ	Max	Units	Conditions
ANALOG INPUT							
Input Voltage Range, POWER LEVEL	IV	Full	V_{REF}		V_{REF} + 1.6	V	
Input Bias Current, POWER LEVEL	I	+25°C	–50		+50	µA	
Analog Bandwidth, Control Loop[1]	V	+25°C		25		MHz	C_{HOLD} = 33 pF, R_F = 1 kΩ, C_F = 2 pF
Input Voltage Range, LEVEL SHIFT IN	IV	Full	0.1		1.6	V	
Input Bias Current, LEVEL SHIFT IN	I	+25°C	–10		0	µA	
Analog Bandwidth, Level Shift[2]	V	Full		130		MHz	
Level Shift Offset	I	+25°C	–32		+32	mV	
Level Shift Gain	I	+25°C	0.95	1.0	1.05	V/V	
OUTPUTS							
Output Current, I_{OUT}	I	+25°C	120			mA	V_{OUT} = 2.5 V
Output Compliance Range	IV	+25°C	2.50		5.25	V	
Idle Current	I	+25°C		2	5.0	mA	PULSE = LOW, DISABLE = LOW
Disable Current	IV	+25°C			1.0	µA	PULSE = LOW, DISABLE = HIGH
SWITCHING PERFORMANCE							
Maximum Pulse Rate	V	+25°C		200		MHz	Output Current –3 dB
Output Propagation Delay (t_{PD}), Rising[3]	IV	Full	2.9	3.9	5.0	ns	
Output Propagation Delay (t_{PD}), Falling[3]	IV	Full	3.2	3.7	4.3	ns	
Output Current Rise Time[4]	IV	Full		1.5	2.0	ns	
Output Current Fall Time[5]	IV	Full		1.5	2.0	ns	
$\overline{CAL}$ Aperture Delay[6]	IV	Full		13		ns	
Disable Time[7]	IV	+25°C		3	5	ns	
HOLD NODE							
Input Bias Current	I	+25°C	–200		200	nA	V_{HOLD} = 2.5 V
Input Voltage Range	IV	Full	V_{REF}		V_{REF} + 1.6	V	Open-Loop Application Only
Minimum External Hold Cap	V	Full		25		pF	
TTL/CMOS INPUTS[8]							
Logic "1" Voltage	I	+25°C	2.0			V	
Logic "1" Voltage	IV	Full	2.0			V	
Logic "0" Voltage	I	+25°C			0.8	V	
Logic "0" Voltage	IV	Full			0.8	V	
Logic "1" Current	I	+25°C	–10		10	µA	V_{HIGH} = 5.0 V
Logic "0" Current	I	+25°C	–1.5			mA	V_{LOW} = 0.8 V
BANDGAP REFERENCE							
Output Voltage (V_{REF})	I	+25°C	1.6	1.8	1.9	V	
Temperature Coefficient	V	+25°C		–0.1		mV/°C	
Output Current	V	+25°C	–0.5		1.0	mA	
SENSE IN							
Current Gain	I	+25°C	0.95	1	1.02	mA/mA	
Voltage	I	+25°C	0.7	1.0	1.3	V	
Input Resistance	V	+25°C		<150		Ω	
POWER SUPPLY							
$+V_S$ Voltage	I	+25°C	4.75	5.00	5.25	V	
$+V_S$ Current	I	+25°C	60	75	95	mA	DISABLE = HIGH, V_{HOLD} = V_{REF}, V_S = 5.0 V

NOTES

[1]Based on rise time of closed-loop pulse response. See Performance Curves.

[2]Based on rise time of pulse response.

[3]Propagation delay measured from the 50% of the rising/falling transition of WRITE PULSE to the 50% point of the rising/falling edge of the output modulation current.

[4]Rise time measured between the 10% and 90% points of the rising transition of the modulation current.

[5]Fall time measured between the 10% and 90% points of the falling transition of the modulation current.

[6]Aperture Delay is measured from the 50% point of the rising edge of WRITE PULSE to the time when the output modulation begins to recalibrate, WRITE CAL is held during this test.

[7]Disable Time is measured from the 50% point of the rising edge of DISABLE to the 50% point of the falling transition of the output current. Fall time during disable is similar to fall time during normal operation.

[8]PULSE, $\overline{PULSE2}$, DISABLE, and $\overline{CAL}$ are TTL/CMOS compatible inputs.

Specifications subject to change without notice.

ABSOLUTE MAXIMUM RATINGS*

$+V_S$	+6 V
POWER LEVEL, LEVEL SHIFT IN	0 V to $+V_S$
TTL/CMOS INPUTS	–0.5 V to $+V_S$
Output Current	200 mA
Operating Temperature	
AD9661AKR	0°C to +70°C
Storage Temperature	–65°C to +150°C
Maximum Junction Temperature	+150°C
Lead Soldering Temp (10 sec)	+300°C

*Absolute maximum ratings are limiting values, to be applied individually, and beyond which the serviceability of the circuit may be impaired. Functional operability under any of these conditions is not necessarily implied. Exposure of absolute maximum rating conditions for extended periods of time may affect device reliability.

ORDERING GUIDE

Model	Temperature Range	Package Option
AD9661AKR	0°C to +70°C	R-28
AD9661AKR-REEL	0°C to +70°C	R-28 (1000/Reel)

EXPLANATION OF TEST LEVELS

Test Level

I – 100% production tested.

II – 100% production tested at +25°C, and sample tested at specified temperatures.

III – Sample tested only.

IV – Parameter is guaranteed by design and characterization testing.

V – Parameter is a typical value only.

VI – All devices are 100% production tested at +25°C; 100% production tested at temperature extremes for military devices; sample tested at temperature extremes for commercial/industrial devices.

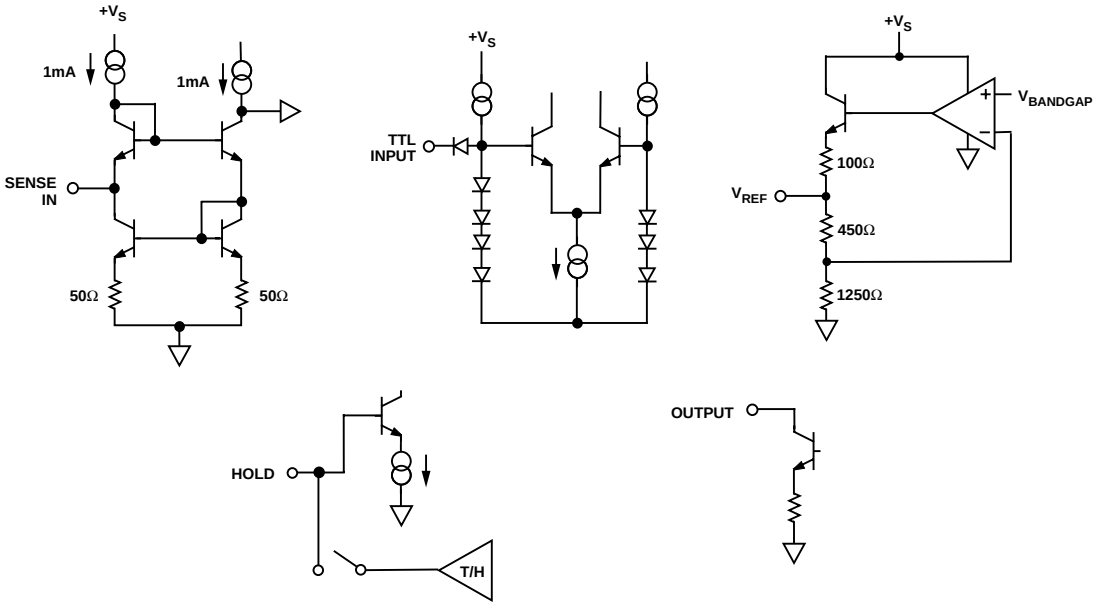

Equivalent Circuits

CAUTION

ESD (electrostatic discharge) sensitive device. Electrostatic charges as high as 4000 V readily accumulate on the human body and test equipment and can discharge without detection. Although the AD9661A features proprietary ESD protection circuitry, permanent damage may occur on devices subjected to high energy electrostatic discharges. Therefore, proper ESD precautions are recommended to avoid performance degradation or loss of functionality.

PIN DESCRIPTIONS

Pin	Function
OUTPUT	Analog laser diode current output. Connect to cathode of laser diode, anode connected to $+V_S$ externally.
POWER LEVEL	Analog voltage input, V_{REF} to V_{REF} + 1.6 V. Output current is set proportional to the POWER LEVEL during calibration as follows: $I_{MONITOR} = \frac{V_{POWER\ LEVEL} - V_{REF}}{R_{GAIN} + 50\ \Omega}$
$\overline{\text{CAL}}$	TTL/CMOS compatible, feedback loop T/H control signal. Logic LOW enables calibration mode, and the feedback loop T/H goes into track mode 13 ns after (the aperture delay) PULSE goes logic HIGH (there is no aperture delay if PULSE goes high before CAL transitions to a LOW level). Logic HIGH disables the T/H and immediately places it in hold mode. PULSE should be held HIGH while calibrating. Floats logic HIGH.
HOLD	External hold capacitor for the bias loop T/H. Approximate droop in the output current while CAL is logic HIGH is: $\pm\Delta I_{OUT} = \frac{18 \times 10^{-9}\ t_{HOLD}}{C_{HOLD}}$ Bandwidth of the loop is: $BW \approx \frac{1}{2\pi(550\ \Omega)C_{HOLD}}$
PULSE	TTL/CMOS compatible, current control signal. Logic HIGH supplies I_{OUT} to the laser diode. Logic LOW turns I_{OUT} off. Floats logic HIGH.
$\overline{\text{PULSE 2}}$	TTL/CMOS compatible, current control signal. Logic LOW supplies I_{OUT} to the laser diode. Logic HIGH turns I_{OUT} off. Floats logic HIGH.
SENSE IN	Analog current input, $I_{MONITOR}$, from PIN photo detector diode. SENSE IN should be connected to the anode of the PIN diode, with the PIN cathode connected to $+V_S$ or another positive voltage. Voltage at SENSE IN varies slightly with temperature and current, but is typically 1.0 V.
GAIN	External connection for the feedback network of the transimpedance amplifier. External feedback network, R_{GAIN} and C_{GAIN}, should be connected between GAIN and POWER MONITOR. See text for choosing values.
POWER MONITOR	Output voltage monitor of the internal feedback loop. Voltage is proportional to feedback current from photo diode, $I_{MONITOR}$.
DISABLE	TTL/CMOS compatible, current output disable circuit. Logic LOW for normal operation; logic HIGH disables the current outputs to the laser diode, and drives the voltage on the hold capacitors close to V_{REF} (minimizes the output current when the device is re-enabled). DISABLE floats logic HIGH.
V_{REF}	Analog Voltage output, internal bandgap voltage reference, ~1.8 V, provided to user for power level offset.
$+V_S$	Power Supply, nominally +5 V. All $+V_S$ connections should be tied together externally.
GROUND	Ground reference. All GROUND connections should be tied together externally.
LEVEL SHIFT IN	Analog input to the on board level shift circuit. Input Range 0.1 V – 1.6 V.
LEVEL SHIFT OUT	Voltage output from on board level shift circuit. Connect to POWER LEVEL externally to use the on board level shift circuit. Output voltage is $V_{LEVEL\ SHIFT\ OUT} = V_{LEVEL\ SHIFT\ IN} + V_{REF}$.

PIN ASSIGNMENTS

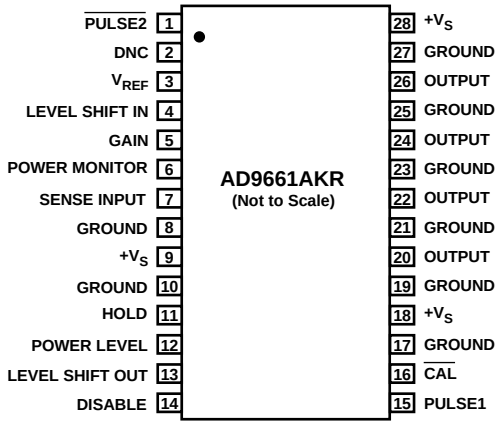

THEORY OF OPERATION

The AD9661A combines a very fast output current switch with an onboard analog light power control loop to provide the user with a complete laser diode driver solution. The block diagram illustrates the key internal functions. The control loop of the AD9661A adjusts the output current level, I_{OUT}, so that the photo diode feedback current, $I_{MONITOR}$, into SENSE IN is proportional to the analog input voltage at POWER LEVEL. Since the monitor current is proportional to the laser diode light power, the loop effectively controls laser power to a level proportional to the analog input. The control loop should be periodically calibrated (see Choosing C_{HOLD}).

The disable circuit turns off I_{OUT} and returns the hold capacitor voltages to their minimum levels (minimum output current) when DISABLE = logic HIGH. It is used during initial power up of the AD9661A or during time periods where the laser is inactive. When the AD9661A is re-enabled the control loop must be recalibrated.

Normal operation of the AD9661A involves the following (in order, see Figure 1):

1. The AD9661A is enabled (DISABLE = logic LOW).
2. The input voltage (POWER LEVEL) is driven to the appropriate level to set the calibrated laser diode output power level.
3. The feedback loop is closed for calibration ($\overline{CAL}$ = logic LOW, and PULSE = logic HIGH), and then opened ($\overline{CAL}$ = logic HIGH).
4. While the feedback loop is open, the laser is pulsed on and off by PULSE.
5. The feedback loop is periodically recalibrated as needed.
6. The AD9661A is disabled when the laser will not be pulsed for an indefinite period of time.

Control Loop Transfer Function

The relationship between $I_{MONITOR}$ and $V_{POWER\ LEVEL}$ is

$$I_{MONITOR} = \frac{V_{POWER\ LEVEL} - V_{REF}}{(R_{GAIN} + 50\,\Omega)}$$

once the loop is calibrated. When the loop is open ($\overline{CAL}$ = logic HIGH), the output current, I_{OUT}, is proportional to the held voltage at HOLD; the external hold capacitor on this pin determines the droop error in the output current between calibrations.

The sections below discuss choosing the external components in the feedback loop for a particular application.

Choosing R_{GAIN}

The gain resistor, R_{GAIN}, allows the user to match the feedback loop's transfer function to the laser diode/photo diode combination.

The user should define the maximum laser diode output power for the intended application, $P_{LD\ MAX}$, and the corresponding photo diode monitor current, $I_{MONITOR\ MAX}$. A typical laser diode transfer function is illustrated below. R_{GAIN} should be chosen as:

$$R_{GAIN} = \frac{1.6\,V}{I_{MONITOR\ MAX}} - 50\,\Omega$$

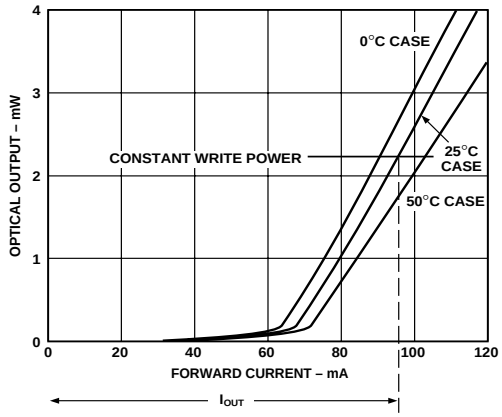

Figure 2. Laser Diode Current-to-Optical Power Curve

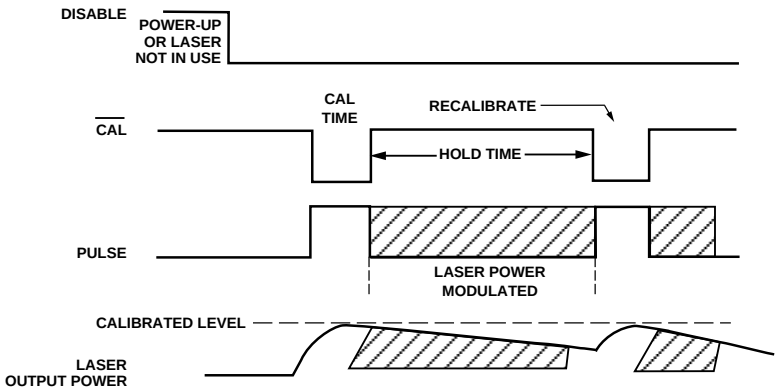

Figure 1. Normal Operating Mode

The laser diode's output power will then vary from 0 to $P_{LD\ MAX}$ for an input range of V_{REF} to V_{REF} +1.6 V @ the POWER LEVEL input.

Minimum specifications for $I_{MONITOR\ MAX}$ should be used when choosing R_{GAIN}. Users are cautioned that laser diode/photo diode combinations that produce monitor currents that are less than $I_{MONITOR\ MAX}$ in the equation above will produce higher laser output power than predicted, which may damage the laser diode. Such a condition is possible if R_{GAIN} is calculated using typical instead of minimum monitor current specifications. In that case the input range to the AD9661A POWER LEVEL input should be limited to avoid damaging laser diodes.

Another approach would be to use a potentiometer for R_{GAIN}. This allows users to optimize the value of R_{GAIN} for each laser diode/photo diode combination's monitor current. The drawback to this approach is that potentiometers' stray inductance and capacitance may cause the transimpedance amplifier to overshoot and degrade its settling, and the value of C_{GAIN} may not be optimized for the entire potentiometer's range.

C_{GAIN} optimizes the response of the transimpedance amplifier and should be chosen as from the table below. Choosing C_{GAIN} larger than the recommended value will slow the response of the amplifier. Lower values improve TZA bandwidth but may cause the amplifier to oscillate.

Table I.

R_{GAIN}	Recommended C_{GAIN}
2.5 kΩ	2 pF
1.5 kΩ	3 pF
1 kΩ	4 pF
500 Ω	8 pF

Choosing C_{HOLD}

Choosing values for the hold capacitor, C_{HOLD}, is a tradeoff between output current droop when the control loop is open, and the time it takes to calibrate and recalibrate the laser power when the loop is closed.

The amount of output current droop is determined by the value of the hold capacitor and the leakage current at that node. When the control loop is open ($\overline{CAL}$ logic HIGH), the pin connection for the hold capacitor (HOLD) is a high impedance input. Leakage current will range from ±200; this low current minimizes the droop in the output power level. Assuming the worst case current of ±200 nA, the output current will change as follows:

$$\pm\Delta I_{OUT} = \frac{18\times10^{-9}}{C_{HOLD}}$$

To choose a value, the user will need to determine the amount of time the loop will be in hold mode, t_{HOLD}, the maximum change in laser output power the application can tolerate, and the laser efficiency (defined as the change in laser output power to the change in laser diode current). As an example, if an application requires 5 mW of laser power ±5%, and the laser diode efficiency is 0.25 mW/mA, then

$$\Delta I_{MAX} = 5\,mW \times (5\%) \Big/ \left(0.25\,\frac{mW}{mA}\right) = 1.0\,mA$$

If the same application had a hold time requirement of 250 µs, then the minimum value of the hold capacitor would be:

$$C_{HOLD} = \frac{18\times10^{-9}\times250\,\mu s}{1.0\,mA} = 4.5\,nF$$

When determining the calibration time, the T/H and the external hold capacitor can be modeled using the simple RC circuit illustrated below.

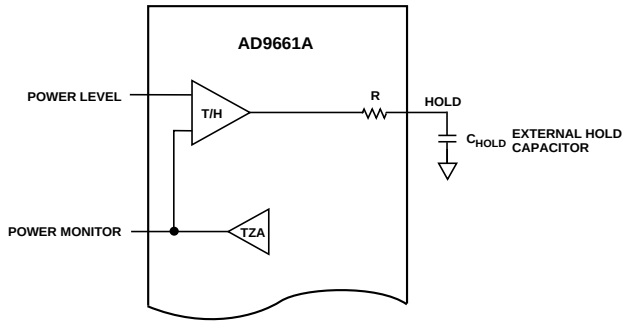

Figure 3. Circuitry Model for Determining Calibration Times

Using this model, the voltage at the hold capacitor is

$$V_{C_{HOLD}} = V_{t=0} + (V_{t=\infty} - V_{t=0})\left(1 - e^{\frac{-t}{\tau}}\right)$$

where t = 0 is when the calibration begins ($\overline{CAL}$ goes logic LOW), $V_{t=0}$ is the voltage on the hold cap at t = 0, $V_{t=\infty}$ is the steady state voltage at the hold cap with the loop closed, and $\tau = R_{C_{HOLD}}$ is the time constant. With this model the error in $V_{C_{HOLD}}$ for a finite calibration time, as compared to $V_{t=\infty}$, can be estimated from the following table and chart:

Table II.

$t_{CALIBRATION}$	% Final Value	Error %
7τ	99.9	0.09
6τ	99.7	0.25
5τ	99.2	0.79
4τ	98.1	1.83
3τ	95.0	4.97
2τ	86.5	13.5
τ	63.2	36.8

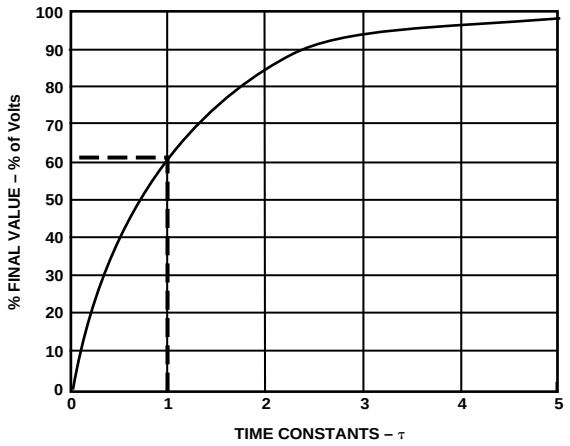

Figure 4. Calibration Time

Initial calibration is required after power-up or any other time the laser has been disabled. Disabling the AD9661A drives the hold capacitor to $\approx V_{REF}$. In this case, or in any case where the output current is more than 10% out of calibration, R will range from 300 Ω to 550 Ω for the model above; the higher value should be used for calculating the worst case calibration time. Following the example above, if C_{HOLD} were chosen as 4.5 nF, then $\tau = RC = 550\ \Omega \times 4.5$ nF would be 2.48 µs. For an initial calibration error < 1%, the initial calibration time should be $> 5\ \tau = 12.36$ µs.

Initial calibration time will actually be better than this calculation indicates, as a significant portion of the calibration time will be within 10% of the final value, and the output resistance in the AD9660's T/H decreases as the hold voltage approaches its final value.

Recalibration is functionally identical to initial calibration, but the loop need only correct for droop. Because droop is assumed to be a small percentage of the initial calibration (< 10%), the resistance for the model above will be in the range of 75 Ω to 140 Ω. Again, the higher value should be used to estimate the worst case time needed for recalibration.

Continuing with the example above, since the droop error during hold time is < 5%, we meet the criteria for recalibration and $\tau = RC = 140\ \Omega \times 4.5$ nF = 0.64 µs. To get a final error of 1% after recalibration, the 5% droop must be corrected to within a 20% error (20% × 5% = 1%). A 2 τ recalibration time of 1.2 µs is sufficient.

Continuous Recalibration

In applications where the hold capacitor is small (< 500 pF) and the WRITE PULSE signals always have a pulse width > 25 ns, the user may continuously calibrate the feedback loop. In such an application, the $\overline{CAL}$ signal should be held logic LOW, and the PULSE signal will control loop calibration via the internal AND gate. In such application, it is important to optimize the layout for the TZA (POWER MONITOR, GAIN, R_{GAIN} and C_{GAIN}).

Driving the Analog Inputs

The POWER LEVEL input of the AD9661A drives the track and hold amplifier and allows the user to adjust the amount of output current as described above. The input voltage range is V_{REF} to V_{REF} + 1.6 V, requiring the user to create an offset of V_{REF} for a ground based signal (see below for description of the on board level shift circuit). The circuit below will perform the level shift and scale the output of a DAC whose output is from ground to a positive voltage. This solution is especially attractive because both the DAC and the op amp can run off a single +5 V supply, and the op amp doesn't have to swing rail to rail.

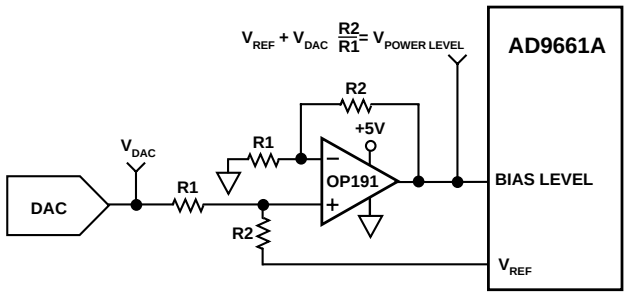

Figure 5. Driving the Analog Inputs

Using the Level Shift Circuit

The AD9661A includes an on board level shift circuit to provide the offset described above. The input, LEVEL SHIFT IN, has an input range from 0.1 V to 1.6 V. The output, LEVEL SHIFT OUT, has a range from V_{REF} to V_{REF} +1.6 V, and can drive POWER MONITOR. The linearity of the level shift circuit is poor for inputs below 100 mV. Between 100 mV and 1.6 V it is about 7 bits accurate.

Layout Considerations

As in all high speed applications, proper layout is critical; it is particularly important when both analog and digital signals are involved. Analog signal paths should be kept as short as possible, and isolated from digital signals to avoid coupling in noise. In particular, digital lines should be isolated from OUTPUT, SENSE IN, POWER LEVEL, LEVEL SHIFT IN POWER MONITOR, and HOLD traces. Digital signal paths should also be kept short, and run lengths matched to avoid propagation delay mismatch.

Layout of the ground and power supply circuits is also critical. A single, low impedance ground plane will reduce noise on the circuit ground. Power supplies should be capacitively coupled to the ground plane to reduce noise in the circuit. 0.1 µF surface mount capacitors, placed as close as possible to the AD9661A $+V_S$ connections, and the $+V_S$ connection to the laser diode meet this requirement. Multilayer circuit boards allow designers to lay out signal traces without interrupting the ground plane, and provide low impedance power planes to further reduce noise.

Minimizing the Impedance of the Output Current Path
Because of the very high current slew that the AD9661A is capable of producing (120+ mA in 1.5 ns), the inductance of the output current path to and from the laser diode is critical. A good layout of the output current path will yield high quality light pulses with rise times of about 1.5 ns and less than 5% overshoot. A poor layout can result in significant overshoot and ringing. The most important guideline for the layout is to minimize the impedance (mostly inductance) of the output current path to the laser.

It is important to recognize that the laser current path is a closed loop. The figure illustrates the path that current travels: (1) from the $+V_S$ connection at the anode of the laser to the cathode (2) from the cathode to the output pins of the AD9661A (3) through the output drive circuit of the AD9661A, (4) through the return path (GROUND plane in the illustration) (5) through the bypass capacitors back to the $+V_S$ connection of the laser diode. The inductance of this loop can be minimized by placing the laser as close to the AD9661A as possible to keep the loop short, and by placing the send and return paths on adjacent layers of the PC board to take advantage of mutual coupling of the path inductances. This mutual coupling effect is the most important factor in reducing inductance in the current path.

The trace from the output pins of the AD9661A to the cathode of the laser should be several millimeters wide and should be as direct as possible. The return current will choose the path of least resistance. If the return path is the GROUND plane, it should have an unbroken path, under the output trace, from the laser anode back to a the AD9661A. If the return path is not the ground plane (such as on a two layer board, or on the $+V_S$ plane), it should still be on the board plane adjacent to the plane of the output trace. If the current cannot return along a path that follows the output trace, the inductance will be drastically increased and performance will be degraded.

Optimizing the Feedback Layout
In applications where the dynamic performance of the analog feedback loop is important, it is necessary to optimize the layout of the gain resistor, R_{GAIN}, as well as the monitor current path to SENSE IN. Such applications include systems which recalibrate the write loop on pulses as short as 25 ns, and closed-loop applications.

The best possible TZA settling will be achieved by using a single carbon surface mount resistor (usually 5% tolerance) for R_{GAIN} and small surface mount capacitor for C_{GAIN}. Because the GAIN pin (Pin 5) is essentially connected to the inverting input of the TZA, it is very sensitive to stray capacitance. R_{GAIN} should be placed between Pin 5 and Pin 6, as close as possible to Pin 5. Small traces should be used, and the ground and $+V_S$ planes adjacent to the trace should be removed to further minimize stray capacitance.

The trace from SENSE IN to the anode of the PIN photodetector should be thin and routed away from the laser cathode trace.

Example Calculations
The example below (in addition to the one included in the sections above) should guide users in choosing R_{GAIN}, C_{GAIN}, the hold capacitor values, and worst case calibration times.

System Requirements:

- Laser power: 4 mW ± 2%
- Hold Time: 0.5 ms

Laser diode/photo diode characteristics:

- Laser efficiency 0.3 mW/mA
- Monitor current : 0.2 mA/mW
- From the laser power requirements and efficiency we can estimate:

$$\Delta I_{OUT\ MAX} = 4\ mW \times (2.0\%) / \left(0.3\ \frac{mW}{mA}\right) = 266.6\ \mu A.$$

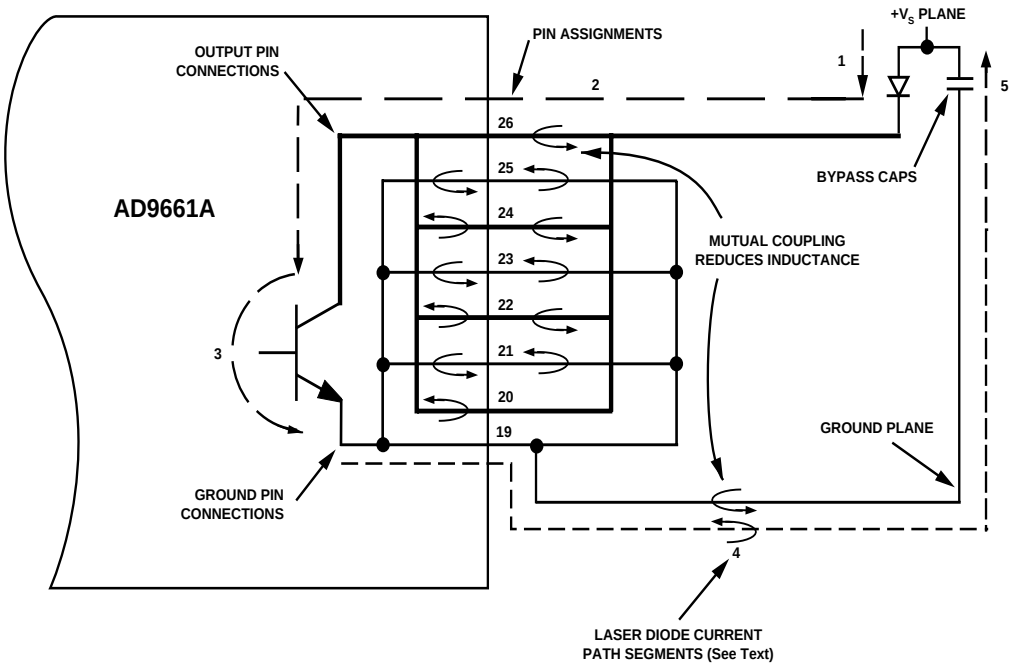

Figure 6. Laser Diode Current Loop

- Choosing a hold caps based on this:

$$C_{HOLD} = \frac{18 \times 10^{-9} \times 0.5\,ms}{266.6\,\mu A} = 0.034\ \mu F$$

- The initial calibration time for < 0.1% error:
  $7\,\tau = 7 \times RC = 7 \times 550\ \Omega \times 0.034\ \mu F = 130.9\ \mu s$
- Recalibration for a 0.1% error after 2% droop (need to correct within 5%):

  $3\,\tau = 3\ RC = 3 \times 140\ \Omega \times 0.034\ \mu F = 14.28\ \mu s$

- From the monitor current specification and the max power specified:

$$I_{MONITOR\ MAX} = 4\,mW\ \frac{0.2\,mA}{mW} = 800\ \mu A$$

and

$$R_{GAIN} = \frac{1.6\,V}{I_{MONITOR\ MAX}} - 50\ \Omega = 2.0\ k\Omega$$

- C_{GAIN} would be chosen from the table as 3 pF for safe compensation.

Typical Performance Characteristics

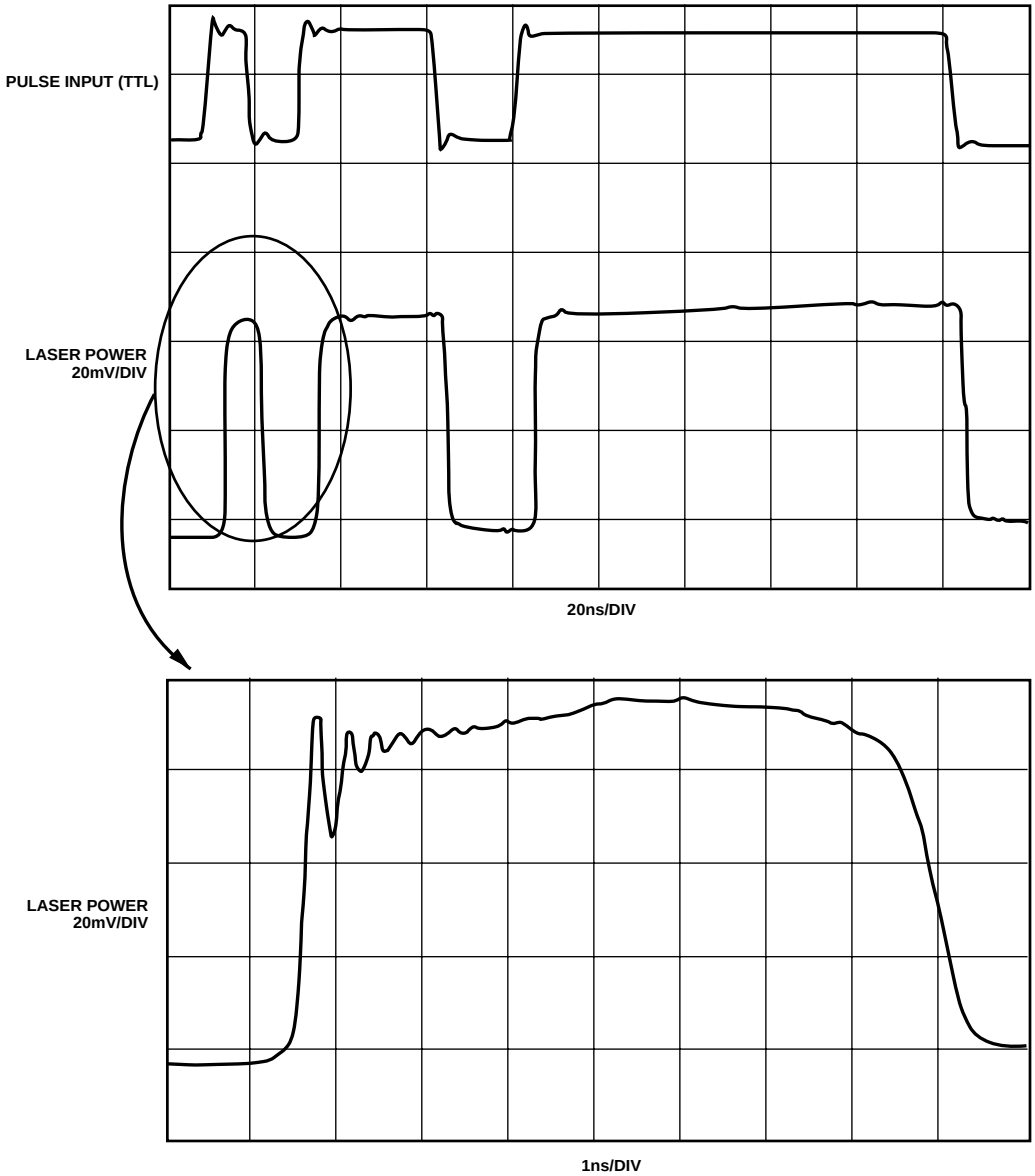

Figure 7. Driving 78N20 Laser Diode @ 5 mW

AD9661A–Typical Performance Characteristics

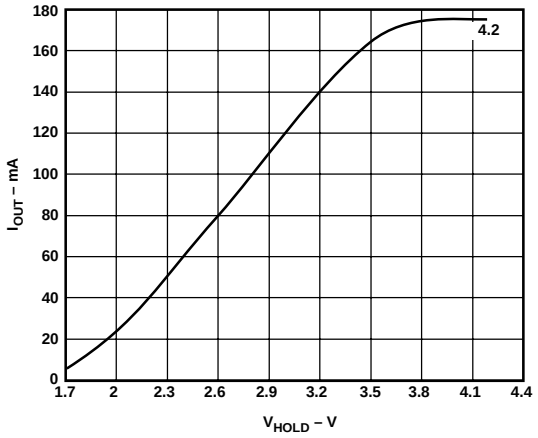

Figure 8. Typical AD9661A V/I Transfer Function

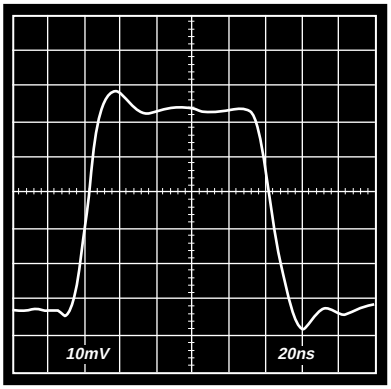

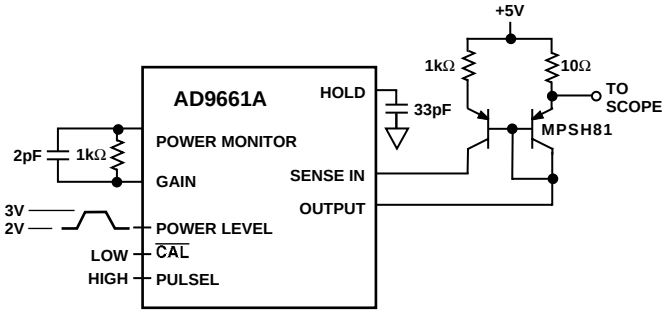

Figure 9. Typical AD9661A Closed-Loop Pulse Response

AD9661A EVALUATION BOARD

The AD9661A Evaluation Board is comprised of two printed circuit boards. The Laser Diode Driver (LDD) Resource Board is both a digital pattern generator and an analog reference generator (see LDD Resource Board Block Diagram.) The board is controlled by an IBM compatible personal computer through a standard printer cable. The resource board interfaces to the AD9661A DUT board, which contains the AD9661A, a level shift circuit for the analog input, and a socket for an N type laser diode. A dummy load circuit for the laser diode is included for evaluation. Power for all the boards is provided through the banana jacks on the AD9661A DUT board. These should be connected to a linear, +5 V power supply. Schematics for the LDD Resource Board, AD9661A DUT, and Dummy Load are included, along with a bill of material and layout information. Please contact Applications for additional information.

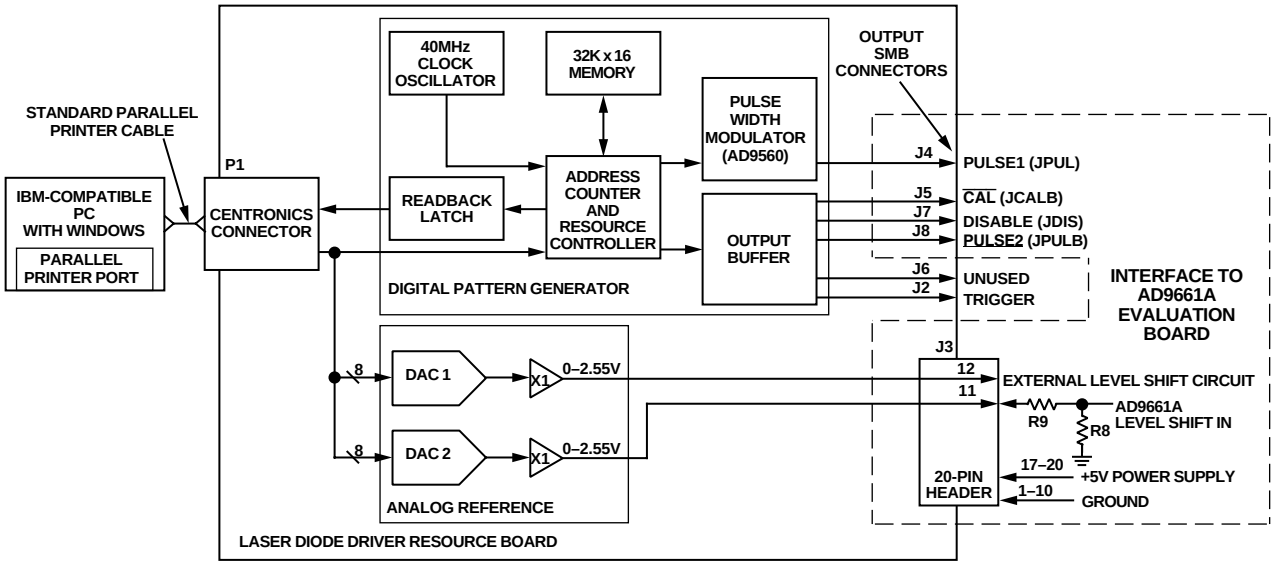

Figure 10. LDD Resource Board Block Diagram

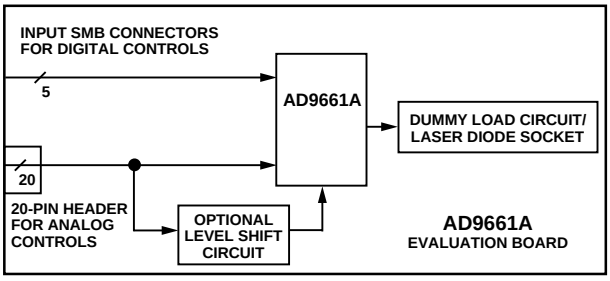

Figure 11. Evaluation Board Block Diagram

OUTLINE DIMENSIONS

Dimensions shown in inches and (mm).

28-Pin Plastic SOIC
(R-28)

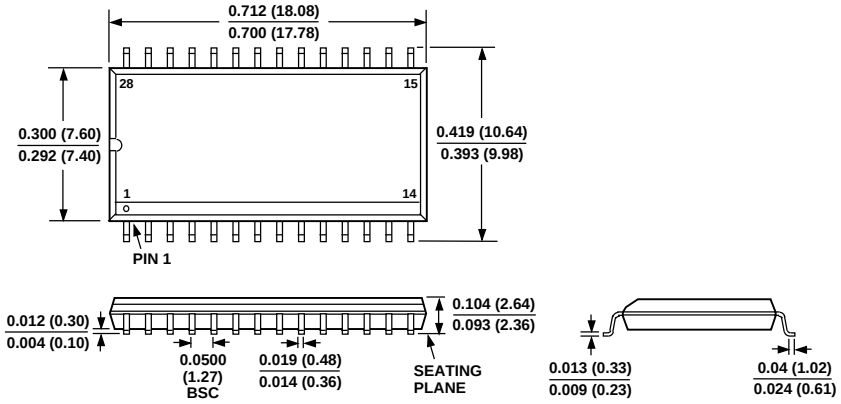

C2079–6–10/95

PRINTED IN U.S.A.

OCEAN CHIPS
Океан Электроники
Поставка электронных компонентов

Компания «Океан Электроники» предлагает заключение долгосрочных отношений при поставках импортных электронных компонентов на взаимовыгодных условиях!

Наши преимущества:

- Поставка оригинальных импортных электронных компонентов напрямую с производств Америки, Европы и Азии, а так же с крупнейших складов мира;
- Широкая линейка поставок активных и пассивных импортных электронных компонентов (более 30 млн. наименований);
- Поставка сложных, дефицитных, либо снятых с производства позиций;
- Оперативные сроки поставки под заказ (от 5 рабочих дней);
- Экспресс доставка в любую точку России;
- Помощь Конструкторского Отдела и консультации квалифицированных инженеров;
- Техническая поддержка проекта, помощь в подборе аналогов, поставка прототипов;
- Поставка электронных компонентов под контролем ВП;
- Система менеджмента качества сертифицирована по Международному стандарту ISO 9001;
- При необходимости вся продукция военного и аэрокосмического назначения проходит испытания и сертификацию в лаборатории (по согласованию с заказчиком);
- Поставка специализированных компонентов военного и аэрокосмического уровня качества (Xilinx, Altera, Analog Devices, Intersil, Interpoint, Microsemi, Actel, Aeroflex, Peregrine, VPT, Syfer, Eurofarad, Texas Instruments, MS Kennedy, Miteq, Cobham, E2V, MA-COM, Hittite, Mini-Circuits, General Dynamics и др.);

Компания «Океан Электроники» является официальным дистрибьютором и эксклюзивным представителем в России одного из крупнейших производителей разъемов военного и аэрокосмического назначения **«JONHON»**, а так же официальным дистрибьютором и эксклюзивным представителем в России производителя высокотехнологичных и надежных решений для передачи СВЧ сигналов **«FORSTAR»**.

AVIC JONHON

«JONHON» (основан в 1970 г.)

Разъемы специального, военного и аэрокосмического назначения:

(Применяются в военной, авиационной, аэрокосмической, морской, железнодорожной, горно- и нефтедобывающей отраслях промышленности)

«FORSTAR» (основан в 1998 г.)

ВЧ соединители, коаксиальные кабели, кабельные сборки и микроволновые компоненты:

(Применяются в телекоммуникациях гражданского и специального назначения, в средствах связи, РЛС, а так же военной, авиационной и аэрокосмической отраслях промышленности).

FORSTAR®

Телефон: 8 (812) 309-75-97 (многоканальный)
Факс: 8 (812) 320-03-32
Электронная почта: ocean@oceanchips.ru
Web: http://oceanchips.ru/
Адрес: 198099, г. Санкт-Петербург, ул. Калинина, д. 2, корп. 4, лит. А