DATA SHEET

74ABT2244

Octal buffer/line driver with 30Ω series termination resistors (3-State)

Product specification
Supersedes data of 1996 Oct 23
IC23 Data Handbook

1998 Jan 16

Philips
Semiconductors

PHILIPS

Octal buffer/line driver with 30Ω series termination resistors (3-State)

74ABT2244

FEATURES

- Octal bus interface
- 3-State buffers
- Live insertion/extraction permitted
- Outputs include series resistance of 30Ω, making external termination resistors unnecessary
- Output capability: +5mA/–32mA
- Latch-up protection exceeds 500mA per Jedec Std 17
- ESD protection exceeds 2000 V per MIL STD 883 Method 3015 and 200 V per Machine Model
- Power-up 3-State
- Same part as 74ABT244-1
- Inputs are disabled during 3-State mode

DESCRIPTION

The 74ABT2244 high-performance BiCMOS device combines low static and dynamic power dissipation with high speed.

The 74ABT2244 device is an octal buffer that is ideal for driving bus lines. The device features two Output Enables ($1\overline{OE}$, $2\overline{OE}$), each controlling four of the 3-State outputs.

The 74ABT2244 is designed with 30Ω series resistance in both the High and Low states of the output. This design reduces line noise in applications such as memory address drivers, clock drivers and bus receivers/transmitters.

The 74ABT2244 is the same as the 74ABT244-1. The part number has been changed to reflect industry standards.

QUICK REFERENCE DATA

SYMBOL	PARAMETER	CONDITIONS T_{amb} = 25°C; GND = 0V	TYPICAL	UNIT
t_{PLH} t_{PHL}	Propagation delay An to Yn	C_L = 50pF; V_{CC} = 5V	2.8 3.9	ns
C_{IN}	Input capacitance	V_I = 0V or V_{CC}	4	pF
C_{OUT}	Output capacitance	Outputs disabled; V_O = 0V or V_{CC}	7	pF
I_{CCZ}	Total supply current	Outputs disabled; V_{CC} = 5.5V	50	µA

ORDERING INFORMATION

PACKAGES	TEMPERATURE RANGE	OUTSIDE NORTH AMERICA	NORTH AMERICA	DWG NUMBER
20-Pin Plastic DIP	–40°C to +85°C	74ABT2244 N	74ABT2244 N	SOT146-1
20-Pin plastic SO	–40°C to +85°C	74ABT2244 D	74ABT2244 D	SOT163-1
20-Pin Plastic SSOP Type II	–40°C to +85°C	74ABT2244 DB	74ABT2244 DB	SOT339-1
20-Pin Plastic TSSOP Type I	–40°C to +85°C	74ABT2244 PW	7ABT2244PW DH	SOT360-1

PIN CONFIGURATION

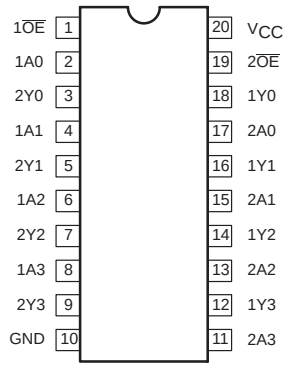

SA00148

PIN DESCRIPTION

PIN NUMBER	SYMBOL	NAME AND FUNCTION
2, 4, 6, 8	1A0 – 1A3	Data inputs
11, 13, 15, 17	2A0 – 2A3	Data inputs
18, 16, 14, 12	1Y0 – 1Y3	Data outputs
9, 7, 5, 3	2Y0 – 2Y3	Data outputs
1, 19	$1\overline{OE}$, $2\overline{OE}$	Output enables
10	GND	Ground (0V)
20	V_{CC}	Positive supply voltage

LOGIC SYMBOL

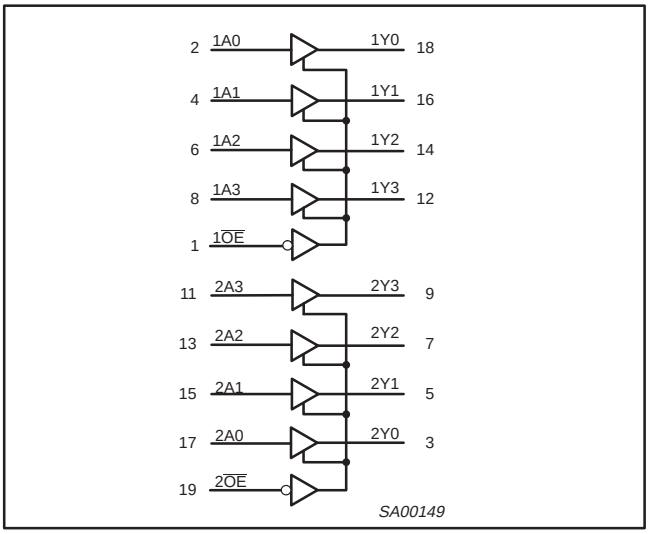

LOGIC SYMBOL (IEEE/IEC)

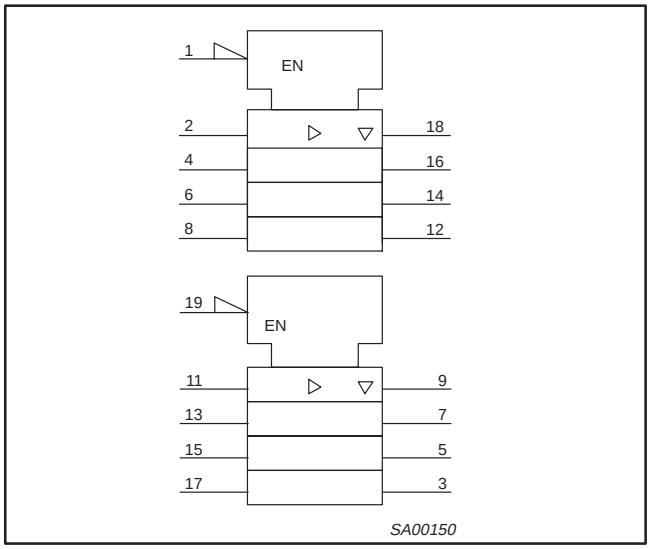

SCHEMATIC OF EACH OUTPUT

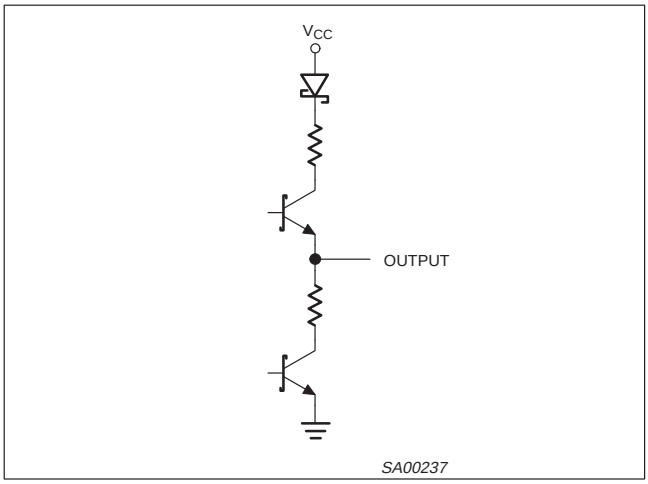

FUNCTION TABLE

INPUTS				OUTPUTS	
$1\overline{OE}$	1An	$2\overline{OE}$	2An	1Yn	2Yn
L	L	L	L	L	L
L	H	L	H	H	H
H	X	H	X	Z	Z

H = High voltage level
L = Low voltage level
X = Don’t care
Z = High impedance “off” state

ABSOLUTE MAXIMUM RATINGS[1, 2]

SYMBOL	PARAMETER	CONDITIONS	RATING	UNIT
V_{CC}	DC supply voltage		–0.5 to +7.0	V
I_{IK}	DC input diode current	$V_I < 0$	–18	mA
V_I	DC input voltage[3]		–1.2 to +7.0	V
I_{OK}	DC output diode current	$V_O < 0$	–50	mA
V_{OUT}	DC output voltage[3]	output in Off or High state	–0.5 to +5.5	V
I_{OUT}	DC output current	output in Low state	128	mA
T_{stg}	Storage temperature range		–65 to 150	°C

NOTES:
1. Stresses beyond those listed may cause permanent damage to the device. These are stress ratings only and functional operation of the device at these or any other conditions beyond those indicated under “recommended operating conditions” is not implied. Exposure to absolute-maximum-rated conditions for extended periods may affect device reliability.
2. The performance capability of a high-performance integrated circuit in conjunction with its thermal environment can create junction temperatures which are detrimental to reliability. The maximum junction temperature of this integrated circuit should not exceed 150°C.
3. The input and output voltage ratings may be exceeded if the input and output current ratings are observed.

RECOMMENDED OPERATING CONDITIONS

SYMBOL	PARAMETER	LIMITS		UNIT
		Min	Max	
V_{CC}	DC supply voltage	4.5	5.5	V
V_I	Input voltage	0	V_{CC}	V
V_{IH}	High-level input voltage	2.0		V
V_{IL}	Low-level Input voltage		0.8	V
I_{OH}	High-level output current		–32	mA
I_{OL}	Low-level output current		12	mA
$\Delta t/\Delta v$	Input transition rise or fall rate	0	5	ns/V
T_{amb}	Operating free-air temperature range	–40	+85	°C

DC ELECTRICAL CHARACTERISTICS

SYMBOL	PARAMETER	TEST CONDITIONS	LIMITS					UNIT
			T_{amb} = +25°C			T_{amb} = –40°C to +85°C		
			Min	Typ	Max	Min	Max	
V_{IK}	Input clamp voltage	V_{CC} = 4.5V; I_{IK} = –18mA		–0.9	–1.2		–1.2	V
V_{OH}	High-level output voltage	V_{CC} = 4.5V; I_{OH} = –3mA; V_I = V_{IL} or V_{IH}	2.5	2.9		2.5		V
		V_{CC} = 5.0V; I_{OH} = –3mA; V_I = V_{IL} or V_{IH}	3.0	3.4		3.0		V
		V_{CC} = 4.5V; I_{OH} = –32mA; V_I = V_{IL} or V_{IH}	2.0	2.4		2.0		V
V_{OL}	Low-level output voltage	V_{CC} = 4.5V; I_{OL} = 5mA; V_I = V_{IL} or V_{IH}		0.32	0.55		0.55	V
		V_{CC} = 4.5V; I_{OL} = 12mA; V_I = V_{IL} or V_{IH}			0.8		0.8	V
I_I	Input leakage current	V_{CC} = 5.5V; V_I = GND or 5.5V		±0.01	±1.0		±1.0	µA
I_{OFF}	Power-off leakage current	V_{CC} = 0.0V; V_O or V_I ≤ 4.5V		5.0	100		100	µA
$I_{PU/PD}$	Power-up/down 3-State output current[3]	V_{CC} = 2.1V; V_O = 0.5V; V_I = GND or V_{CC}; $V_{\overline{OE}}$ = Don't care		5.0	50		50	µA
I_{OZH}	3-State output High current	V_{CC} = 5.5V; V_O = 2.7V; V_I = V_{IL} or V_{IH}		0.1	50		50	µA
I_{OZL}	3-State output Low current	V_{CC} = 5.5V; V_O = 0.5V; V_I = V_{IL} or V_{IH}		–0.1	–50		–50	µA
I_{CEX}	Output High leakage current	V_{CC} = 5.5V; V_O = 5.5V; V_I = GND or V_{CC}		5.0	50		50	µA
I_O	Output current[1]	V_{CC} = 5.5V; V_O = 2.5V	–50	–100	–180	–50	–180	mA
I_{CCH}	Quiescent supply current	V_{CC} = 5.5V; Outputs High, V_I = GND or V_{CC}		50	250		250	µA
I_{CCL}		V_{CC} = 5.5V; Outputs Low, V_I = GND or V_{CC}		24	30		30	mA
I_{CCZ}		V_{CC} = 5.5V; Outputs 3-State; V_I = GND or V_{CC}		50	250		250	µA
ΔI_{CC}	Additional supply current per input pin[2]	Outputs enabled, one input at 3.4V, other inputs at V_{CC} or GND; V_{CC} = 5.5V		0.5	1.5		1.5	mA
		Outputs 3-State, one enable input at 3.4V, other inputs at V_{CC} or GND; V_{CC} = 5.5V		50	250		250	µA
		Outputs 3-State, one enable input at 3.4V, other inputs at V_{CC} or GND; V_{CC} = 5.5V		0.5	1.5		1.5	mA

NOTES:
1. Not more than one output should be tested at a time, and the duration of the test should not exceed one second.
2. This is the increase in supply current for each input at 3.4V.
3. This parameter is valid for any V_{CC} between 0V and 2.1V, with a transition time of up to 10msec. From V_{CC} = 2.1V to V_{CC} = 5V ± 10% a transition time of up to 100µsec is permitted.

AC CHARACTERISTICS

GND = 0V; t_R = t_F = 2.5ns; C_L = 50pF, R_L = 500Ω

SYMBOL	PARAMETER	WAVEFORM	LIMITS					UNIT
			T_{amb} = +25°C V_{CC} = +5.0V			T_{amb} = –40°C to +85°C V_{CC} = +5.0V ±0.5V		
			Min	Typ	Max	Min	Max	
t_{PLH} t_{PHL}	Propagation delay An to Yn	1	1.0 1.0	2.8 3.9	4.3 5.3	1.0 1.0	4.7 5.6	ns
t_{PZH} t_{PZL}	Output enable time to High and Low level	2	1.1 2.1	3.3 5.0	4.8 7.3	1.1 2.1	5.5 8.3	ns
t_{PHZ} t_{PLZ}	Output disable time from High and Low level	2	2.1 1.7	3.7 3.4	5.6 5.3	2.1 1.7	6.6 5.8	ns

AC WAVEFORMS

V_M = 1.5V, V_{IN} = GND to 3.0V

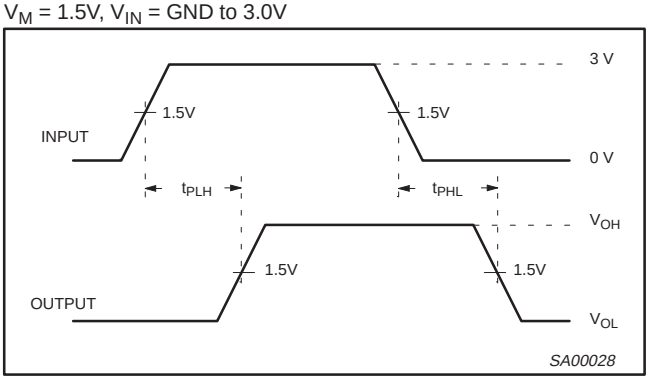

Waveform 1. Waveforms Showing the Input (An) to Output (Yn) Propagation Delays

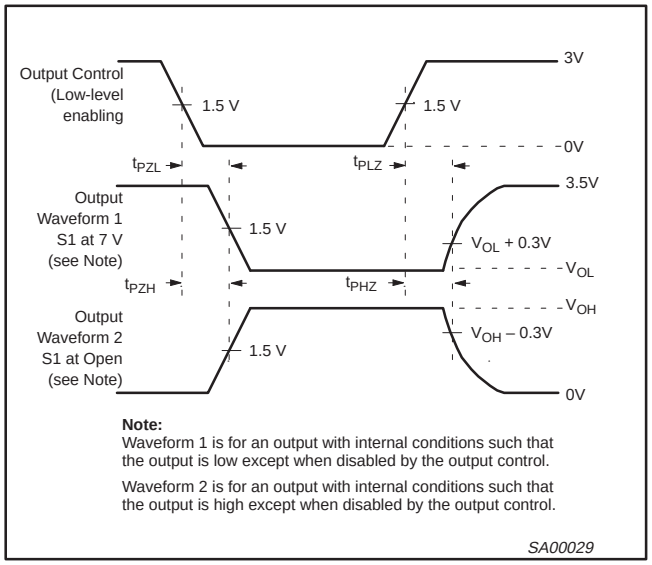

Waveform 2. Waveforms Showing the 3-State Output Enable and Disable Times

TEST CIRCUIT AND WAVEFORMS

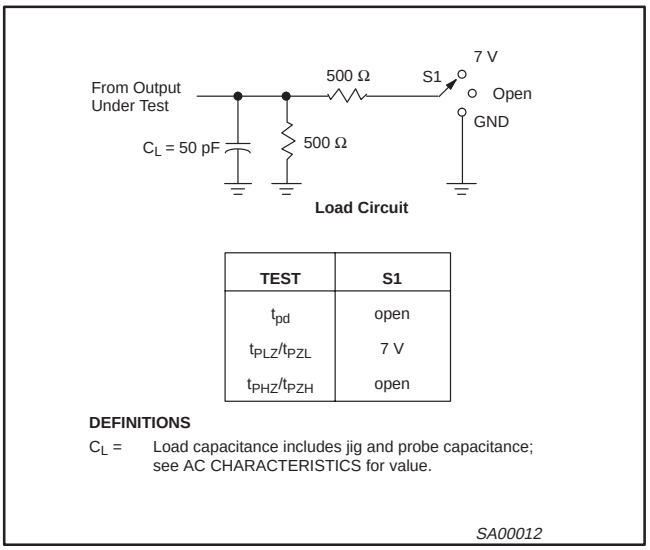

TEST	S1
t_{pd}	open
t_{PLZ}/t_{PZL}	7 V
t_{PHZ}/t_{PZH}	open

DEFINITIONS

C_L = Load capacitance includes jig and probe capacitance; see AC CHARACTERISTICS for value.

DIP20: plastic dual in-line package; 20 leads (300 mil) **SOT146-1**

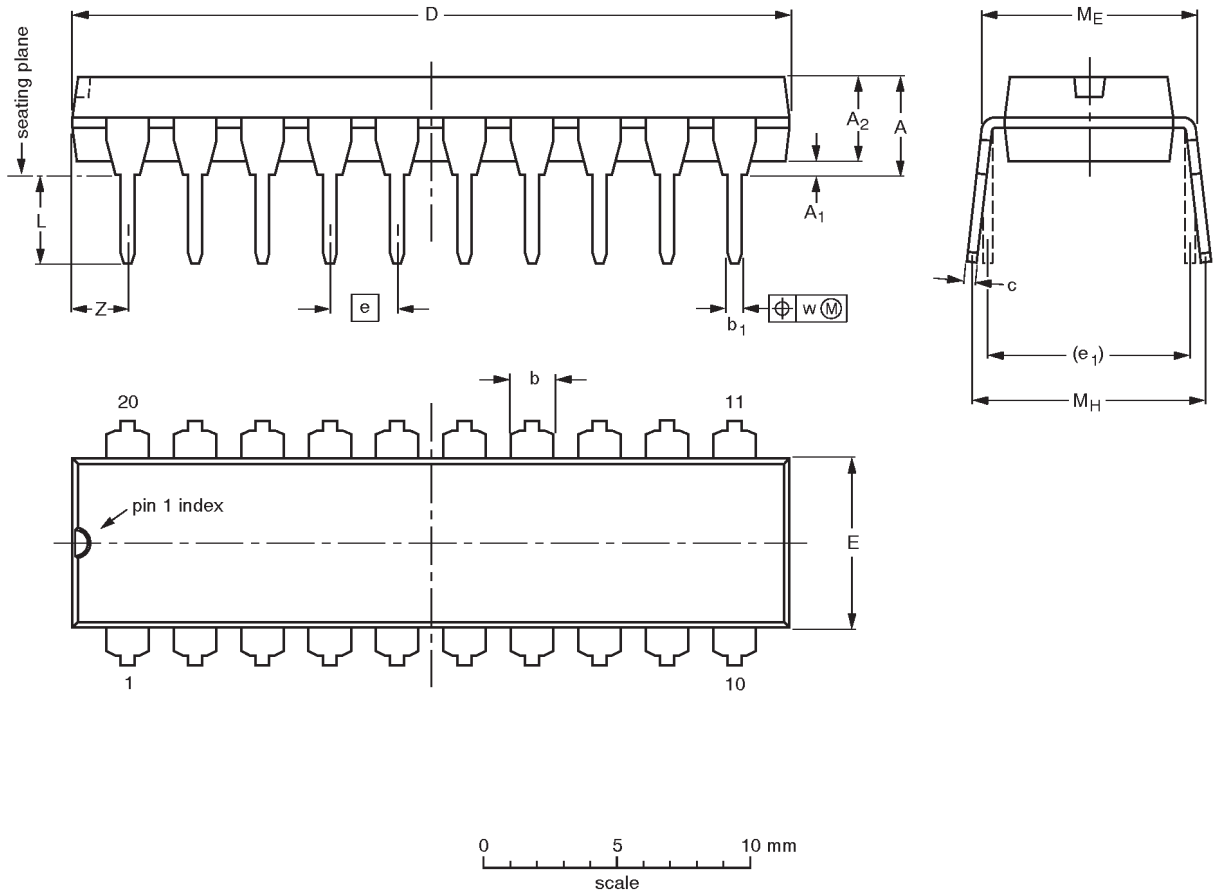

DIMENSIONS (inch dimensions are derived from the original mm dimensions)

UNIT	A max.	A_1 min.	A_2 max.	b	b_1	c	D (1)	E (1)	e	e_1	L	M_E	M_H	w	Z (1) max.
mm	4.2	0.51	3.2	1.73 1.30	0.53 0.38	0.36 0.23	26.92 26.54	6.40 6.22	2.54	7.62	3.60 3.05	8.25 7.80	10.0 8.3	0.254	2.0
inches	0.17	0.020	0.13	0.068 0.051	0.021 0.015	0.014 0.009	1.060 1.045	0.25 0.24	0.10	0.30	0.14 0.12	0.32 0.31	0.39 0.33	0.01	0.078

Note

1. Plastic or metal protrusions of 0.25 mm maximum per side are not included.

OUTLINE VERSION	REFERENCES				EUROPEAN PROJECTION	ISSUE DATE
	IEC	JEDEC	EIAJ			
SOT146-1			SC603			~~92-11-17~~ 95-05-24

SO20: plastic small outline package; 20 leads; body width 7.5 mm **SOT163-1**

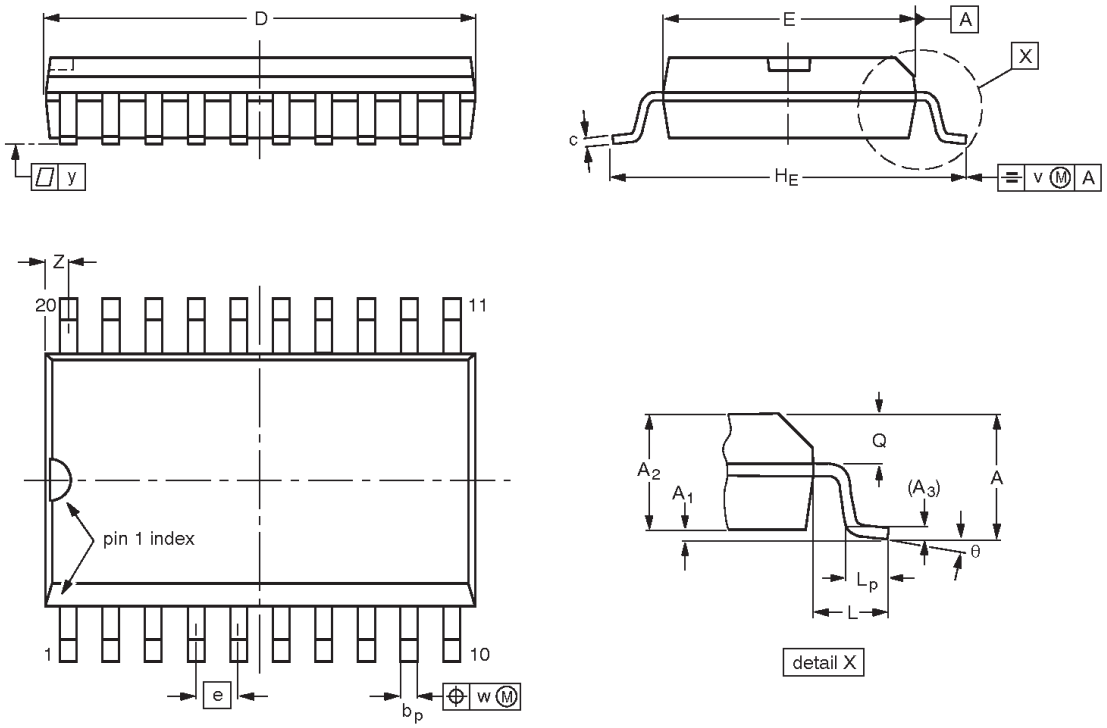

0 5 10 mm
scale

DIMENSIONS (inch dimensions are derived from the original mm dimensions)

UNIT	A max.	A_1	A_2	A_3	b_p	c	D (1)	E (1)	e	H_E	L	L_p	Q	v	w	y	Z (1)	θ
mm	2.65	0.30 0.10	2.45 2.25	0.25	0.49 0.36	0.32 0.23	13.0 12.6	7.6 7.4	1.27	10.65 10.00	1.4	1.1 0.4	1.1 1.0	0.25	0.25	0.1	0.9 0.4	8° 0°
inches	0.10	0.012 0.004	0.096 0.089	0.01	0.019 0.014	0.013 0.009	0.51 0.49	0.30 0.29	0.050	0.42 0.39	0.055	0.043 0.016	0.043 0.039	0.01	0.01	0.004	0.035 0.016	

Note

1. Plastic or metal protrusions of 0.15 mm maximum per side are not included.

OUTLINE VERSION	REFERENCES				EUROPEAN PROJECTION	ISSUE DATE
	IEC	JEDEC	EIAJ			
SOT163-1	075E04	MS-013AC				~~92-11-17~~ 95-01-24

SSOP20: plastic shrink small outline package; 20 leads; body width 5.3 mm **SOT339-1**

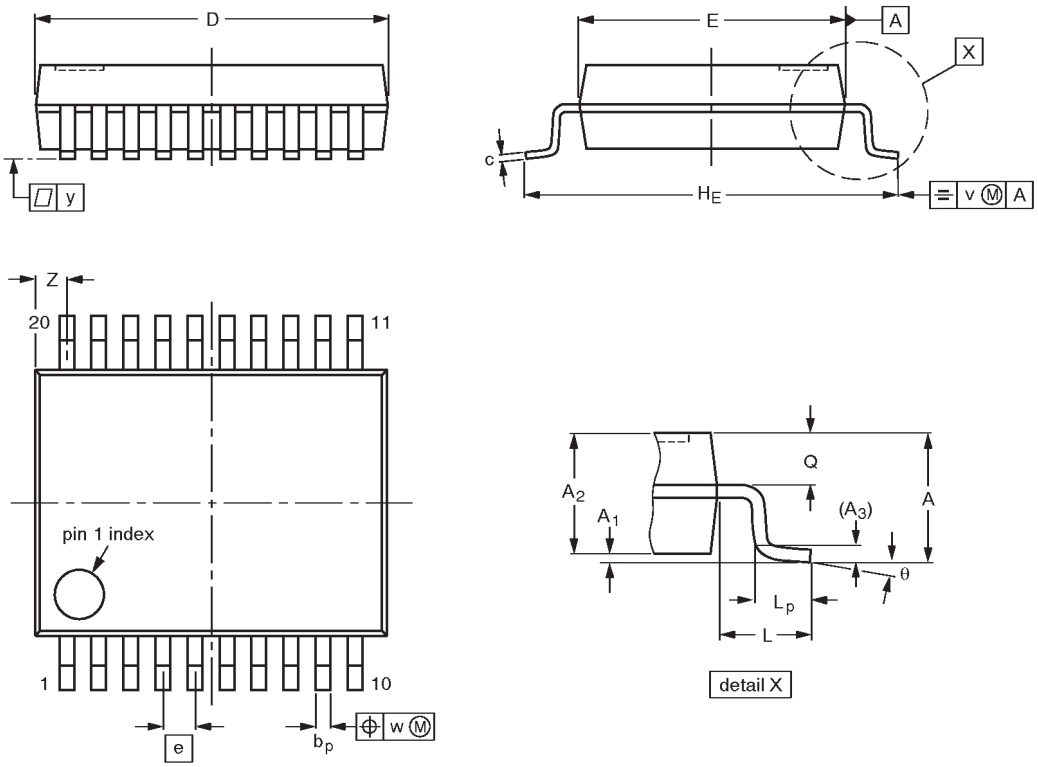

0 2.5 5 mm
scale

DIMENSIONS (mm are the original dimensions)

UNIT	A max.	A_1	A_2	A_3	b_p	c	D(1)	E(1)	e	H_E	L	L_p	Q	v	w	y	Z(1)	θ
mm	2.0	0.21 0.05	1.80 1.65	0.25	0.38 0.25	0.20 0.09	7.4 7.0	5.4 5.2	0.65	7.9 7.6	1.25	1.03 0.63	0.9 0.7	0.2	0.13	0.1	0.9 0.5	8° 0°

Note

1. Plastic or metal protrusions of 0.20 mm maximum per side are not included.

OUTLINE VERSION	REFERENCES				EUROPEAN PROJECTION	ISSUE DATE
	IEC	JEDEC	EIAJ			
SOT339-1		MO-150AE				~~93-09-08~~ 95-02-04

TSSOP20: plastic thin shrink small outline package; 20 leads; body width 4.4 mm **SOT360-1**

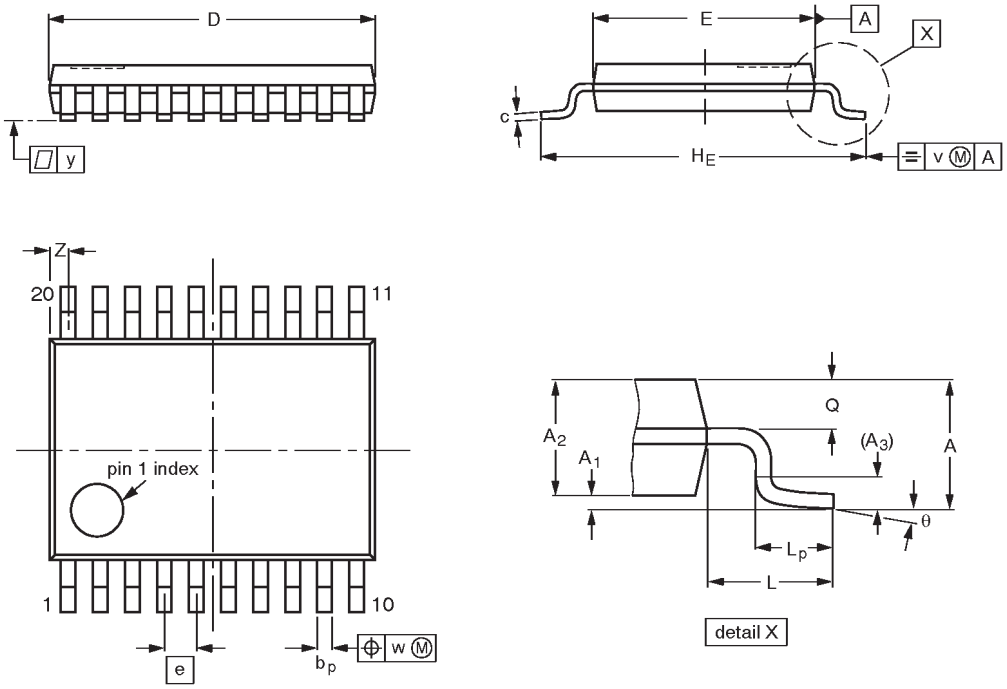

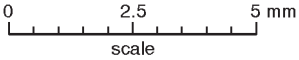

DIMENSIONS (mm are the original dimensions)

UNIT	A max.	A_1	A_2	A_3	b_p	c	D (1)	E (2)	e	H_E	L	L_p	Q	v	w	y	Z (1)	θ
mm	1.10	0.15 0.05	0.95 0.80	0.25	0.30 0.19	0.2 0.1	6.6 6.4	4.5 4.3	0.65	6.6 6.2	1.0	0.75 0.50	0.4 0.3	0.2	0.13	0.1	0.5 0.2	8° 0°

Notes

1. Plastic or metal protrusions of 0.15 mm maximum per side are not included.
2. Plastic interlead protrusions of 0.25 mm maximum per side are not included.

OUTLINE VERSION	REFERENCES				EUROPEAN PROJECTION	ISSUE DATE
	IEC	JEDEC	EIAJ			
SOT360-1		MO-153AC				~~93-06-16~~ 95-02-04

NOTES

Octal buffer/line driver with 30Ω series termination resistors (3-State)

74ABT2244

Data sheet status

Data sheet status	Product status	Definition [1]
Objective specification	Development	This data sheet contains the design target or goal specifications for product development. Specification may change in any manner without notice.
Preliminary specification	Qualification	This data sheet contains preliminary data, and supplementary data will be published at a later date. Philips Semiconductors reserves the right to make chages at any time without notice in order to improve design and supply the best possible product.
Product specification	Production	This data sheet contains final specifications. Philips Semiconductors reserves the right to make changes at any time without notice in order to improve design and supply the best possible product.

[1] Please consult the most recently issued datasheet before initiating or completing a design.

Definitions

Short-form specification — The data in a short-form specification is extracted from a full data sheet with the same type number and title. For detailed information see the relevant data sheet or data handbook.

Limiting values definition — Limiting values given are in accordance with the Absolute Maximum Rating System (IEC 134). Stress above one or more of the limiting values may cause permanent damage to the device. These are stress ratings only and operation of the device at these or at any other conditions above those given in the Characteristics sections of the specification is not implied. Exposure to limiting values for extended periods may affect device reliability.

Application information — Applications that are described herein for any of these products are for illustrative purposes only. Philips Semiconductors make no representation or warranty that such applications will be suitable for the specified use without further testing or modification.

Disclaimers

Life support — These products are not designed for use in life support appliances, devices or systems where malfunction of these products can reasonably be expected to result in personal injury. Philips Semiconductors customers using or selling these products for use in such applications do so at their own risk and agree to fully indemnify Philips Semiconductors for any damages resulting from such application.

Right to make changes — Philips Semiconductors reserves the right to make changes, without notice, in the products, including circuits, standard cells, and/or software, described or contained herein in order to improve design and/or performance. Philips Semiconductors assumes no responsibility or liability for the use of any of these products, conveys no license or title under any patent, copyright, or mask work right to these products, and makes no representations or warranties that these products are free from patent, copyright, or mask work right infringement, unless otherwise specified.

Philips Semiconductors
811 East Arques Avenue
P.O. Box 3409
Sunnyvale, California 94088–3409
Telephone 800-234-7381

© Copyright Philips Electronics North America Corporation 1998
All rights reserved. Printed in U.S.A.

print code Date of release: 05-96
Document order number: 9397-750-03466

Let's make things better.

Philips Semiconductors

PHILIPS

OCEAN CHIPS
Океан Электроники
Поставка электронных компонентов

Компания «Океан Электроники» предлагает заключение долгосрочных отношений при поставках импортных электронных компонентов на взаимовыгодных условиях!

Наши преимущества:

- Поставка оригинальных импортных электронных компонентов напрямую с производств Америки, Европы и Азии, а так же с крупнейших складов мира;
- Широкая линейка поставок активных и пассивных импортных электронных компонентов (более 30 млн. наименований);
- Поставка сложных, дефицитных, либо снятых с производства позиций;
- Оперативные сроки поставки под заказ (от 5 рабочих дней);
- Экспресс доставка в любую точку России;
- Помощь Конструкторского Отдела и консультации квалифицированных инженеров;
- Техническая поддержка проекта, помощь в подборе аналогов, поставка прототипов;
- Поставка электронных компонентов под контролем ВП;
- Система менеджмента качества сертифицирована по Международному стандарту ISO 9001;
- При необходимости вся продукция военного и аэрокосмического назначения проходит испытания и сертификацию в лаборатории (по согласованию с заказчиком);
- Поставка специализированных компонентов военного и аэрокосмического уровня качества (Xilinx, Altera, Analog Devices, Intersil, Interpoint, Microsemi, Actel, Aeroflex, Peregrine, VPT, Syfer, Eurofarad, Texas Instruments, MS Kennedy, Miteq, Cobham, E2V, MA-COM, Hittite, Mini-Circuits, General Dynamics и др.);

Компания «Океан Электроники» является официальным дистрибьютором и эксклюзивным представителем в России одного из крупнейших производителей разъемов военного и аэрокосмического назначения **«JONHON»**, а так же официальным дистрибьютором и эксклюзивным представителем в России производителя высокотехнологичных и надежных решений для передачи СВЧ сигналов **«FORSTAR»**.

AVIC JONHON

«JONHON» (основан в 1970 г.)

Разъемы специального, военного и аэрокосмического назначения:

(Применяются в военной, авиационной, аэрокосмической, морской, железнодорожной, горно- и нефтедобывающей отраслях промышленности)

«FORSTAR» (основан в 1998 г.)

ВЧ соединители, коаксиальные кабели, кабельные сборки и микроволновые компоненты:

(Применяются в телекоммуникациях гражданского и специального назначения, в средствах связи, РЛС, а так же военной, авиационной и аэрокосмической отраслях промышленности).

FORSTAR®

Телефон: 8 (812) 309-75-97 (многоканальный)
Факс: 8 (812) 320-03-32
Электронная почта: ocean@oceanchips.ru
Web: http://oceanchips.ru/
Адрес: 198099, г. Санкт-Петербург, ул. Калинина, д. 2, корп. 4, лит. А