# DATA SHEET

## 74ABT2244

Octal buffer/line driver with 30Ω series termination resistors (3-State)

Product specification
Supersedes data of 1996 Oct 23
IC23 Data Handbook

1998 Jan 16

Philips
Semiconductors

PHILIPS

# Octal buffer/line driver with 30Ω series termination resistors (3-State)

# 74ABT2244

## FEATURES

- Octal bus interface
- 3-State buffers
- Live insertion/extraction permitted
- Outputs include series resistance of 30Ω, making external termination resistors unnecessary
- Output capability: +5mA/–32mA
- Latch-up protection exceeds 500mA per Jedec Std 17
- ESD protection exceeds 2000 V per MIL STD 883 Method 3015 and 200 V per Machine Model
- Power-up 3-State
- Same part as 74ABT244-1
- Inputs are disabled during 3-State mode

## DESCRIPTION

The 74ABT2244 high-performance BiCMOS device combines low static and dynamic power dissipation with high speed.

The 74ABT2244 device is an octal buffer that is ideal for driving bus lines. The device features two Output Enables ($1\overline{OE}$, $2\overline{OE}$), each controlling four of the 3-State outputs.

The 74ABT2244 is designed with 30Ω series resistance in both the High and Low states of the output. This design reduces line noise in applications such as memory address drivers, clock drivers and bus receivers/transmitters.

The 74ABT2244 is the same as the 74ABT244-1. The part number has been changed to reflect industry standards.

## QUICK REFERENCE DATA

| SYMBOL | PARAMETER | CONDITIONS $T_{amb}$ = 25°C; GND = 0V | TYPICAL | UNIT |
|---|---|---|---|---|
| $t_{PLH}$<br>$t_{PHL}$ | Propagation delay<br>An to Yn | $C_L$ = 50pF; $V_{CC}$ = 5V | 2.8<br>3.9 | ns |
| $C_{IN}$ | Input capacitance | $V_I$ = 0V or $V_{CC}$ | 4 | pF |
| $C_{OUT}$ | Output capacitance | Outputs disabled; $V_O$ = 0V or $V_{CC}$ | 7 | pF |
| $I_{CCZ}$ | Total supply current | Outputs disabled; $V_{CC}$ = 5.5V | 50 | µA |

## ORDERING INFORMATION

| PACKAGES | TEMPERATURE RANGE | OUTSIDE NORTH AMERICA | NORTH AMERICA | DWG NUMBER |
|---|---|---|---|---|
| 20-Pin Plastic DIP | –40°C to +85°C | 74ABT2244 N | 74ABT2244 N | SOT146-1 |
| 20-Pin plastic SO | –40°C to +85°C | 74ABT2244 D | 74ABT2244 D | SOT163-1 |
| 20-Pin Plastic SSOP Type II | –40°C to +85°C | 74ABT2244 DB | 74ABT2244 DB | SOT339-1 |
| 20-Pin Plastic TSSOP Type I | –40°C to +85°C | 74ABT2244 PW | 7ABT2244PW DH | SOT360-1 |

## PIN CONFIGURATION

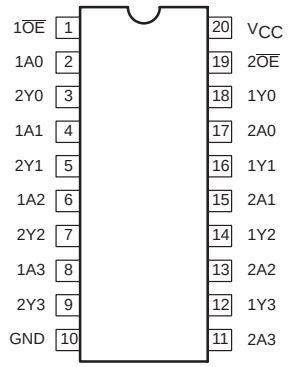


SA00148

## PIN DESCRIPTION

| PIN NUMBER | SYMBOL | NAME AND FUNCTION |
|---|---|---|
| 2, 4, 6, 8 | 1A0 – 1A3 | Data inputs |
| 11, 13, 15, 17 | 2A0 – 2A3 | Data inputs |
| 18, 16, 14, 12 | 1Y0 – 1Y3 | Data outputs |
| 9, 7, 5, 3 | 2Y0 – 2Y3 | Data outputs |
| 1, 19 | $1\overline{OE}$, $2\overline{OE}$ | Output enables |
| 10 | GND | Ground (0V) |
| 20 | $V_{CC}$ | Positive supply voltage |

## LOGIC SYMBOL

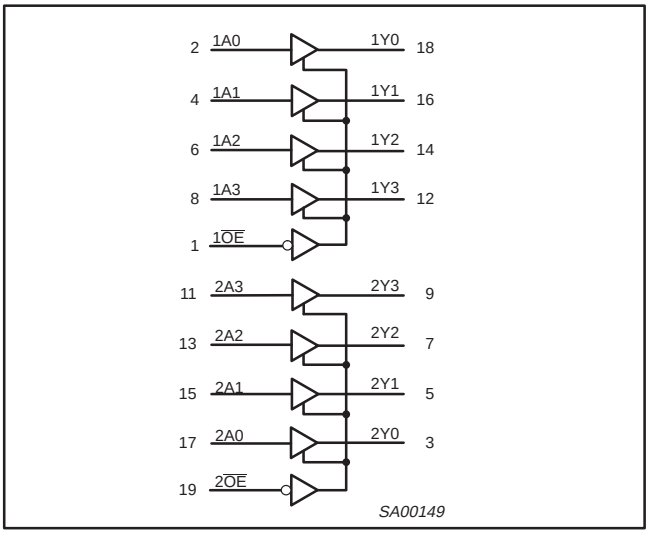


## LOGIC SYMBOL (IEEE/IEC)

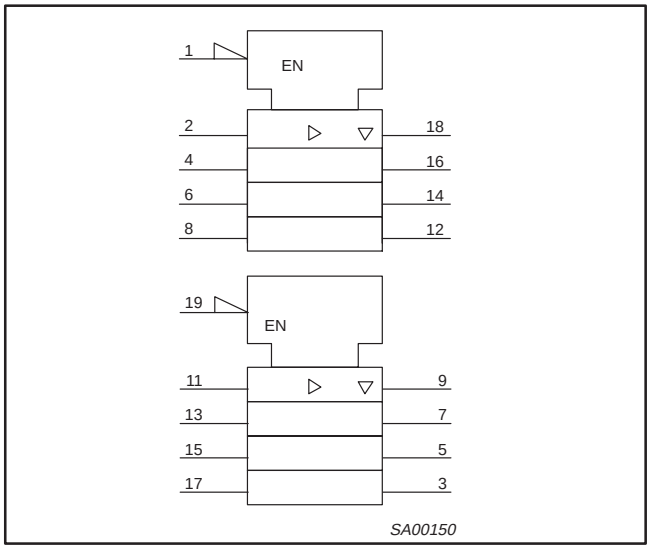


## SCHEMATIC OF EACH OUTPUT

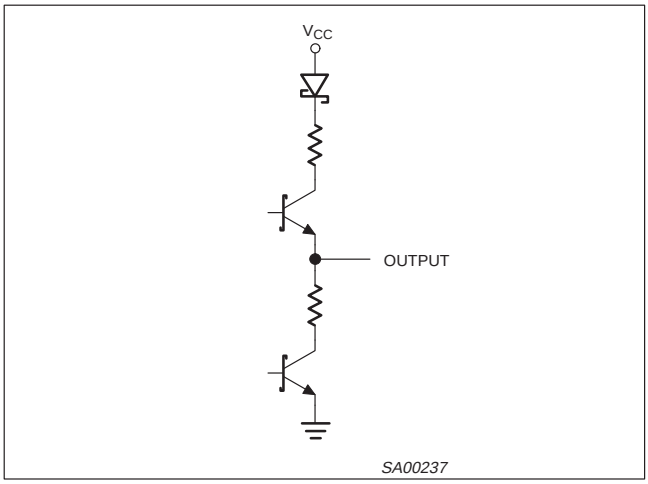


## FUNCTION TABLE

| INPUTS | | | | OUTPUTS | |
|---|---|---|---|---|---|
| $1\overline{OE}$ | 1An | $2\overline{OE}$ | 2An | 1Yn | 2Yn |
| L | L | L | L | L | L |
| L | H | L | H | H | H |
| H | X | H | X | Z | Z |

H = High voltage level
L = Low voltage level
X = Don’t care
Z = High impedance “off” state

## ABSOLUTE MAXIMUM RATINGS[1, 2]

| SYMBOL | PARAMETER | CONDITIONS | RATING | UNIT |
|---|---|---|---|---|
| $V_{CC}$ | DC supply voltage | | –0.5 to +7.0 | V |
| $I_{IK}$ | DC input diode current | $V_I < 0$ | –18 | mA |
| $V_I$ | DC input voltage[3] | | –1.2 to +7.0 | V |
| $I_{OK}$ | DC output diode current | $V_O < 0$ | –50 | mA |
| $V_{OUT}$ | DC output voltage[3] | output in Off or High state | –0.5 to +5.5 | V |
| $I_{OUT}$ | DC output current | output in Low state | 128 | mA |
| $T_{stg}$ | Storage temperature range | | –65 to 150 | °C |

**NOTES:**
1. Stresses beyond those listed may cause permanent damage to the device. These are stress ratings only and functional operation of the device at these or any other conditions beyond those indicated under “recommended operating conditions” is not implied. Exposure to absolute-maximum-rated conditions for extended periods may affect device reliability.
2. The performance capability of a high-performance integrated circuit in conjunction with its thermal environment can create junction temperatures which are detrimental to reliability. The maximum junction temperature of this integrated circuit should not exceed 150°C.
3. The input and output voltage ratings may be exceeded if the input and output current ratings are observed.

## RECOMMENDED OPERATING CONDITIONS

| SYMBOL | PARAMETER | LIMITS | | UNIT |
|---|---|---|---|---|
| | | Min | Max | |
| $V_{CC}$ | DC supply voltage | 4.5 | 5.5 | V |
| $V_I$ | Input voltage | 0 | $V_{CC}$ | V |
| $V_{IH}$ | High-level input voltage | 2.0 | | V |
| $V_{IL}$ | Low-level Input voltage | | 0.8 | V |
| $I_{OH}$ | High-level output current | | –32 | mA |
| $I_{OL}$ | Low-level output current | | 12 | mA |
| $\Delta t/\Delta v$ | Input transition rise or fall rate | 0 | 5 | ns/V |
| $T_{amb}$ | Operating free-air temperature range | –40 | +85 | °C |

## DC ELECTRICAL CHARACTERISTICS

| SYMBOL | PARAMETER | TEST CONDITIONS | LIMITS | | | | | UNIT |
|---|---|---|---|---|---|---|---|---|
| | | | $T_{amb}$ = +25°C | | | $T_{amb}$ = –40°C to +85°C | | |
| | | | Min | Typ | Max | Min | Max | |
| $V_{IK}$ | Input clamp voltage | $V_{CC}$ = 4.5V; $I_{IK}$ = –18mA | | –0.9 | –1.2 | | –1.2 | V |
| $V_{OH}$ | High-level output voltage | $V_{CC}$ = 4.5V; $I_{OH}$ = –3mA; $V_I$ = $V_{IL}$ or $V_{IH}$ | 2.5 | 2.9 | | 2.5 | | V |
| | | $V_{CC}$ = 5.0V; $I_{OH}$ = –3mA; $V_I$ = $V_{IL}$ or $V_{IH}$ | 3.0 | 3.4 | | 3.0 | | V |
| | | $V_{CC}$ = 4.5V; $I_{OH}$ = –32mA; $V_I$ = $V_{IL}$ or $V_{IH}$ | 2.0 | 2.4 | | 2.0 | | V |
| $V_{OL}$ | Low-level output voltage | $V_{CC}$ = 4.5V; $I_{OL}$ = 5mA; $V_I$ = $V_{IL}$ or $V_{IH}$ | | 0.32 | 0.55 | | 0.55 | V |
| | | $V_{CC}$ = 4.5V; $I_{OL}$ = 12mA; $V_I$ = $V_{IL}$ or $V_{IH}$ | | | 0.8 | | 0.8 | V |
| $I_I$ | Input leakage current | $V_{CC}$ = 5.5V; $V_I$ = GND or 5.5V | | ±0.01 | ±1.0 | | ±1.0 | µA |
| $I_{OFF}$ | Power-off leakage current | $V_{CC}$ = 0.0V; $V_O$ or $V_I$ ≤ 4.5V | | 5.0 | 100 | | 100 | µA |
| $I_{PU/PD}$ | Power-up/down 3-State output current[3] | $V_{CC}$ = 2.1V; $V_O$ = 0.5V; $V_I$ = GND or $V_{CC}$; $V_{\overline{OE}}$ = Don't care | | 5.0 | 50 | | 50 | µA |
| $I_{OZH}$ | 3-State output High current | $V_{CC}$ = 5.5V; $V_O$ = 2.7V; $V_I$ = $V_{IL}$ or $V_{IH}$ | | 0.1 | 50 | | 50 | µA |
| $I_{OZL}$ | 3-State output Low current | $V_{CC}$ = 5.5V; $V_O$ = 0.5V; $V_I$ = $V_{IL}$ or $V_{IH}$ | | –0.1 | –50 | | –50 | µA |
| $I_{CEX}$ | Output High leakage current | $V_{CC}$ = 5.5V; $V_O$ = 5.5V; $V_I$ = GND or $V_{CC}$ | | 5.0 | 50 | | 50 | µA |
| $I_O$ | Output current[1] | $V_{CC}$ = 5.5V; $V_O$ = 2.5V | –50 | –100 | –180 | –50 | –180 | mA |
| $I_{CCH}$ | Quiescent supply current | $V_{CC}$ = 5.5V; Outputs High, $V_I$ = GND or $V_{CC}$ | | 50 | 250 | | 250 | µA |
| $I_{CCL}$ | | $V_{CC}$ = 5.5V; Outputs Low, $V_I$ = GND or $V_{CC}$ | | 24 | 30 | | 30 | mA |
| $I_{CCZ}$ | | $V_{CC}$ = 5.5V; Outputs 3-State; $V_I$ = GND or $V_{CC}$ | | 50 | 250 | | 250 | µA |
| $\Delta I_{CC}$ | Additional supply current per input pin[2] | Outputs enabled, one input at 3.4V, other inputs at $V_{CC}$ or GND; $V_{CC}$ = 5.5V | | 0.5 | 1.5 | | 1.5 | mA |
| | | Outputs 3-State, one enable input at 3.4V, other inputs at $V_{CC}$ or GND; $V_{CC}$ = 5.5V | | 50 | 250 | | 250 | µA |
| | | Outputs 3-State, one enable input at 3.4V, other inputs at $V_{CC}$ or GND; $V_{CC}$ = 5.5V | | 0.5 | 1.5 | | 1.5 | mA |

**NOTES:**
1. Not more than one output should be tested at a time, and the duration of the test should not exceed one second.
2. This is the increase in supply current for each input at 3.4V.
3. This parameter is valid for any $V_{CC}$ between 0V and 2.1V, with a transition time of up to 10msec. From $V_{CC}$ = 2.1V to $V_{CC}$ = 5V ± 10% a transition time of up to 100µsec is permitted.

## AC CHARACTERISTICS

GND = 0V; $t_R$ = $t_F$ = 2.5ns; $C_L$ = 50pF, $R_L$ = 500Ω

| SYMBOL | PARAMETER | WAVEFORM | LIMITS | | | | | UNIT |
|---|---|---|---|---|---|---|---|---|
| | | | $T_{amb}$ = +25°C $V_{CC}$ = +5.0V | | | $T_{amb}$ = –40°C to +85°C $V_{CC}$ = +5.0V ±0.5V | | |
| | | | Min | Typ | Max | Min | Max | |
| $t_{PLH}$<br>$t_{PHL}$ | Propagation delay<br>An to Yn | 1 | 1.0<br>1.0 | 2.8<br>3.9 | 4.3<br>5.3 | 1.0<br>1.0 | 4.7<br>5.6 | ns |
| $t_{PZH}$<br>$t_{PZL}$ | Output enable time<br>to High and Low level | 2 | 1.1<br>2.1 | 3.3<br>5.0 | 4.8<br>7.3 | 1.1<br>2.1 | 5.5<br>8.3 | ns |
| $t_{PHZ}$<br>$t_{PLZ}$ | Output disable time<br>from High and Low level | 2 | 2.1<br>1.7 | 3.7<br>3.4 | 5.6<br>5.3 | 2.1<br>1.7 | 6.6<br>5.8 | ns |

## AC WAVEFORMS

$V_M$ = 1.5V, $V_{IN}$ = GND to 3.0V

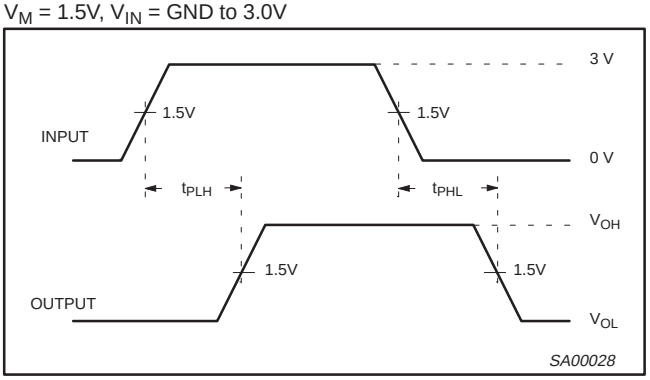


**Waveform 1. Waveforms Showing the Input (An) to Output (Yn) Propagation Delays**

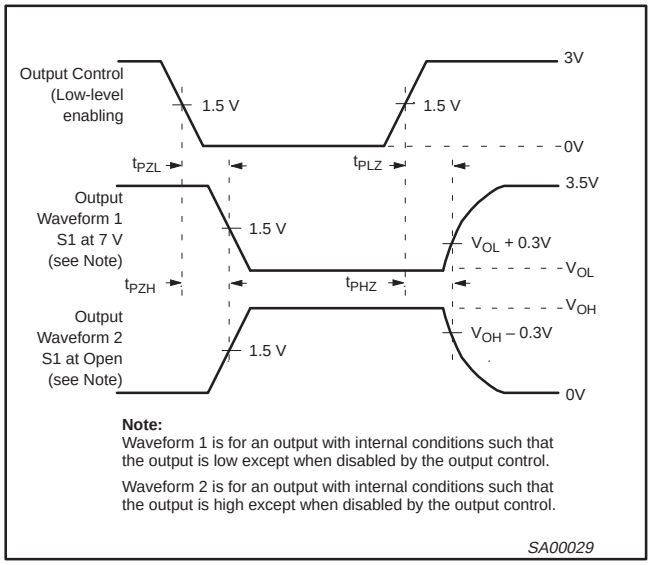


**Waveform 2. Waveforms Showing the 3-State Output Enable and Disable Times**

## TEST CIRCUIT AND WAVEFORMS

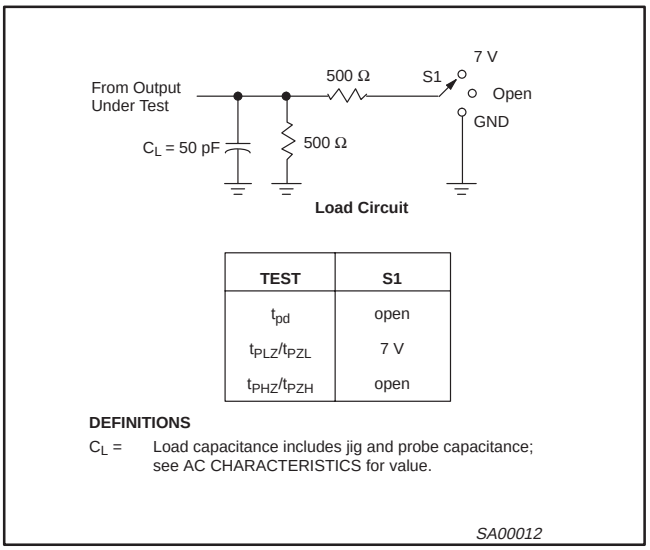


| TEST | S1 |
|---|---|
| $t_{pd}$ | open |
| $t_{PLZ}/t_{PZL}$ | 7 V |
| $t_{PHZ}/t_{PZH}$ | open |

**DEFINITIONS**

$C_L$ = Load capacitance includes jig and probe capacitance; see AC CHARACTERISTICS for value.

**DIP20: plastic dual in-line package; 20 leads (300 mil)** **SOT146-1**

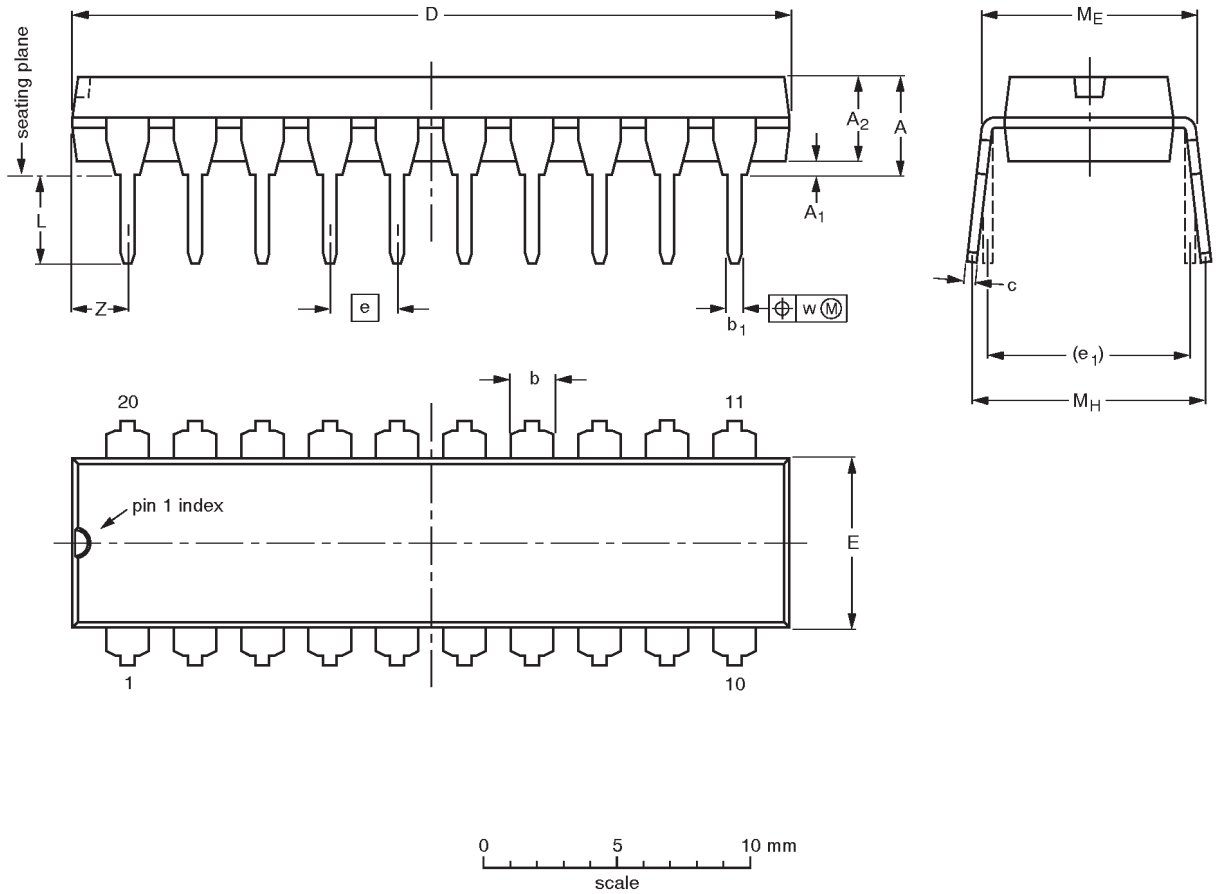


**DIMENSIONS (inch dimensions are derived from the original mm dimensions)**

| UNIT | A max. | $A_1$ min. | $A_2$ max. | b | $b_1$ | c | D (1) | E (1) | e | $e_1$ | L | $M_E$ | $M_H$ | w | Z (1) max. |
|---|---|---|---|---|---|---|---|---|---|---|---|---|---|---|---|
| mm | 4.2 | 0.51 | 3.2 | 1.73<br>1.30 | 0.53<br>0.38 | 0.36<br>0.23 | 26.92<br>26.54 | 6.40<br>6.22 | 2.54 | 7.62 | 3.60<br>3.05 | 8.25<br>7.80 | 10.0<br>8.3 | 0.254 | 2.0 |
| inches | 0.17 | 0.020 | 0.13 | 0.068<br>0.051 | 0.021<br>0.015 | 0.014<br>0.009 | 1.060<br>1.045 | 0.25<br>0.24 | 0.10 | 0.30 | 0.14<br>0.12 | 0.32<br>0.31 | 0.39<br>0.33 | 0.01 | 0.078 |

**Note**

1. Plastic or metal protrusions of 0.25 mm maximum per side are not included.

| OUTLINE VERSION | REFERENCES | | | | EUROPEAN PROJECTION | ISSUE DATE |
|---|---|---|---|---|---|---|
| | IEC | JEDEC | EIAJ | | | |
| SOT146-1 | | | SC603 | | | ~~92-11-17~~<br>95-05-24 |

**SO20: plastic small outline package; 20 leads; body width 7.5 mm** **SOT163-1**

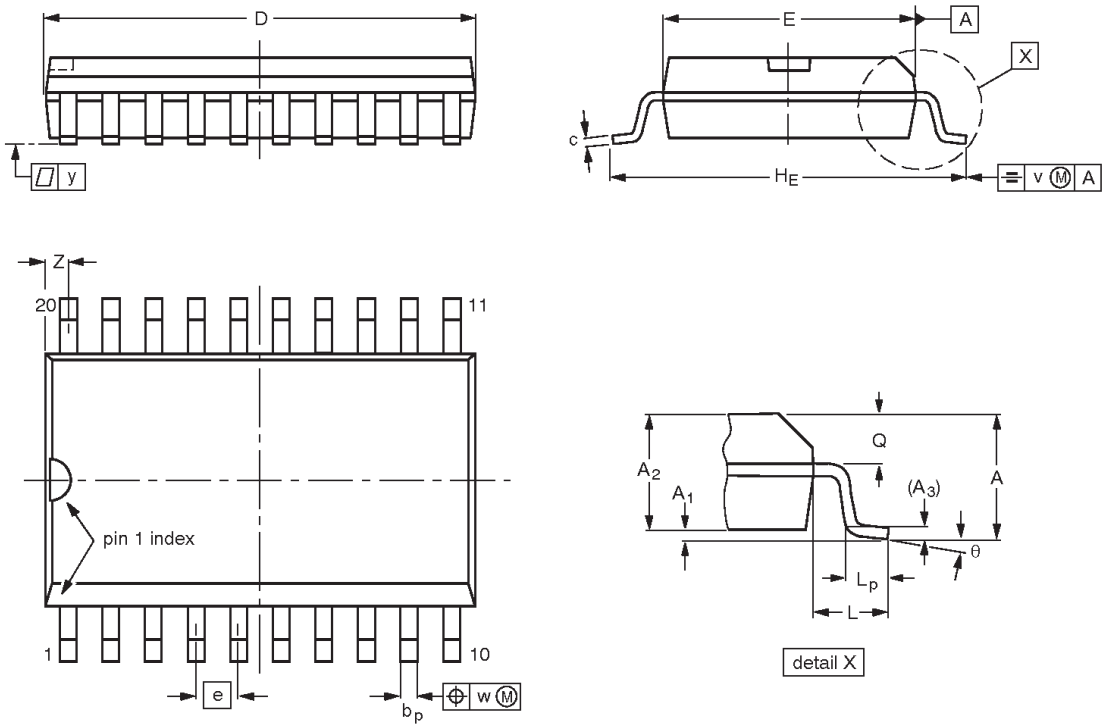


0 5 10 mm
scale

**DIMENSIONS (inch dimensions are derived from the original mm dimensions)**

| UNIT | A max. | $A_1$ | $A_2$ | $A_3$ | $b_p$ | c | D (1) | E (1) | e | $H_E$ | L | $L_p$ | Q | v | w | y | Z (1) | θ |
|---|---|---|---|---|---|---|---|---|---|---|---|---|---|---|---|---|---|---|
| mm | 2.65 | 0.30<br>0.10 | 2.45<br>2.25 | 0.25 | 0.49<br>0.36 | 0.32<br>0.23 | 13.0<br>12.6 | 7.6<br>7.4 | 1.27 | 10.65<br>10.00 | 1.4 | 1.1<br>0.4 | 1.1<br>1.0 | 0.25 | 0.25 | 0.1 | 0.9<br>0.4 | 8°<br>0° |
| inches | 0.10 | 0.012<br>0.004 | 0.096<br>0.089 | 0.01 | 0.019<br>0.014 | 0.013<br>0.009 | 0.51<br>0.49 | 0.30<br>0.29 | 0.050 | 0.42<br>0.39 | 0.055 | 0.043<br>0.016 | 0.043<br>0.039 | 0.01 | 0.01 | 0.004 | 0.035<br>0.016 | |

**Note**

1. Plastic or metal protrusions of 0.15 mm maximum per side are not included.

| OUTLINE VERSION | REFERENCES | | | | EUROPEAN PROJECTION | ISSUE DATE |
|---|---|---|---|---|---|---|
| | IEC | JEDEC | EIAJ | | | |
| SOT163-1 | 075E04 | MS-013AC | | | | ~~92-11-17~~<br>95-01-24 |

**SSOP20: plastic shrink small outline package; 20 leads; body width 5.3 mm** **SOT339-1**

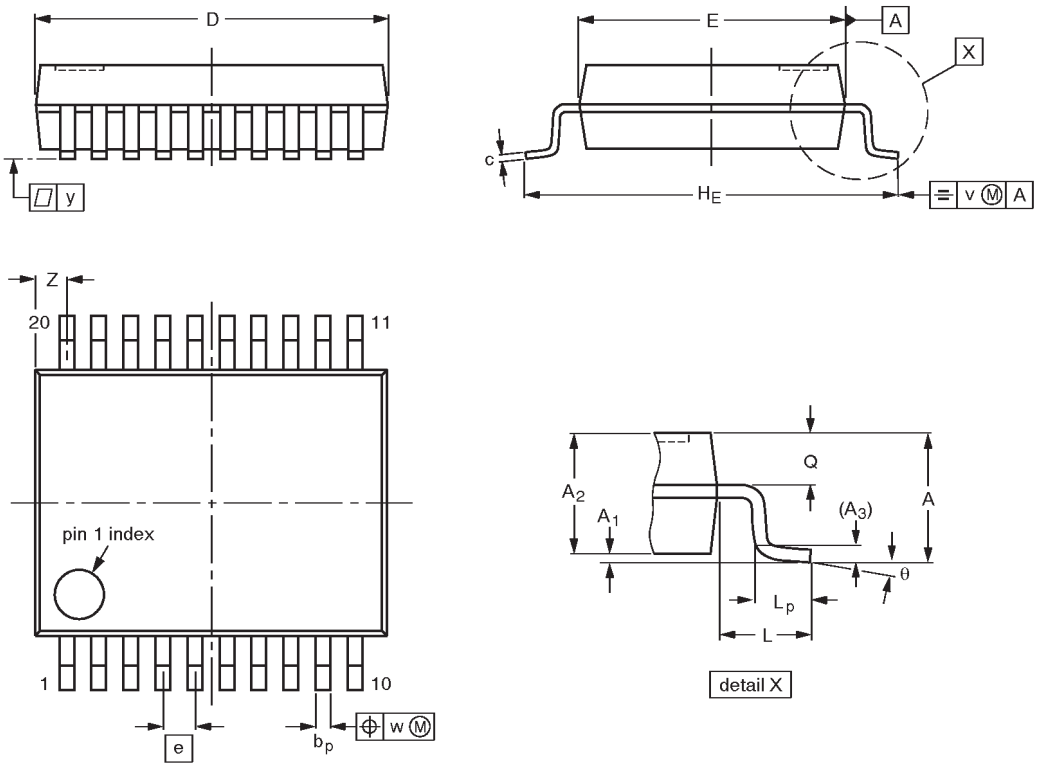


0 2.5 5 mm
scale

**DIMENSIONS (mm are the original dimensions)**

| UNIT | A max. | $A_1$ | $A_2$ | $A_3$ | $b_p$ | c | D(1) | E(1) | e | $H_E$ | L | $L_p$ | Q | v | w | y | Z(1) | θ |
|---|---|---|---|---|---|---|---|---|---|---|---|---|---|---|---|---|---|---|
| mm | 2.0 | 0.21<br>0.05 | 1.80<br>1.65 | 0.25 | 0.38<br>0.25 | 0.20<br>0.09 | 7.4<br>7.0 | 5.4<br>5.2 | 0.65 | 7.9<br>7.6 | 1.25 | 1.03<br>0.63 | 0.9<br>0.7 | 0.2 | 0.13 | 0.1 | 0.9<br>0.5 | 8°<br>0° |

**Note**

1. Plastic or metal protrusions of 0.20 mm maximum per side are not included.

| OUTLINE VERSION | REFERENCES | | | | EUROPEAN PROJECTION | ISSUE DATE |
|---|---|---|---|---|---|---|
| | IEC | JEDEC | EIAJ | | | |
| SOT339-1 | | MO-150AE | | | | ~~93-09-08~~<br>95-02-04 |

**TSSOP20: plastic thin shrink small outline package; 20 leads; body width 4.4 mm** **SOT360-1**

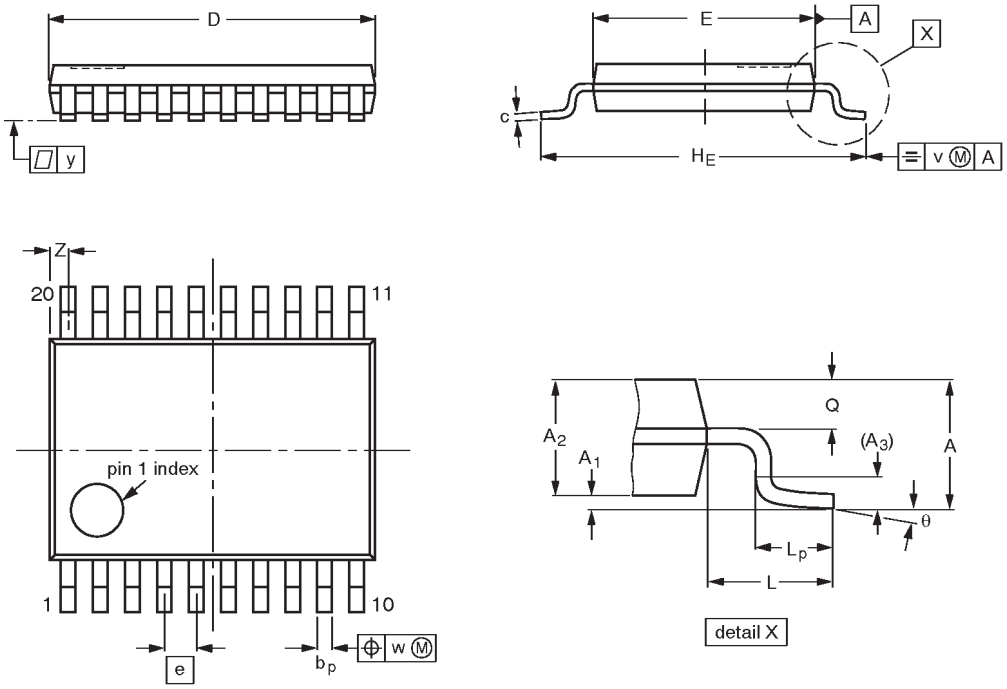


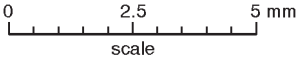


**DIMENSIONS (mm are the original dimensions)**

| UNIT | A max. | $A_1$ | $A_2$ | $A_3$ | $b_p$ | c | D (1) | E (2) | e | $H_E$ | L | $L_p$ | Q | v | w | y | Z (1) | θ |
|---|---|---|---|---|---|---|---|---|---|---|---|---|---|---|---|---|---|---|
| mm | 1.10 | 0.15<br>0.05 | 0.95<br>0.80 | 0.25 | 0.30<br>0.19 | 0.2<br>0.1 | 6.6<br>6.4 | 4.5<br>4.3 | 0.65 | 6.6<br>6.2 | 1.0 | 0.75<br>0.50 | 0.4<br>0.3 | 0.2 | 0.13 | 0.1 | 0.5<br>0.2 | 8°<br>0° |

**Notes**

1. Plastic or metal protrusions of 0.15 mm maximum per side are not included.
2. Plastic interlead protrusions of 0.25 mm maximum per side are not included.

| OUTLINE VERSION | REFERENCES | | | | EUROPEAN PROJECTION | ISSUE DATE |
|---|---|---|---|---|---|---|
| | IEC | JEDEC | EIAJ | | | |
| SOT360-1 | | MO-153AC | | | | ~~93-06-16~~<br>95-02-04 |

**NOTES**

# Octal buffer/line driver with 30Ω series termination resistors (3-State)

74ABT2244

## Data sheet status

| Data sheet status | Product status | Definition [1] |
|---|---|---|
| Objective specification | Development | This data sheet contains the design target or goal specifications for product development. Specification may change in any manner without notice. |
| Preliminary specification | Qualification | This data sheet contains preliminary data, and supplementary data will be published at a later date. Philips Semiconductors reserves the right to make chages at any time without notice in order to improve design and supply the best possible product. |
| Product specification | Production | This data sheet contains final specifications. Philips Semiconductors reserves the right to make changes at any time without notice in order to improve design and supply the best possible product. |

[1] Please consult the most recently issued datasheet before initiating or completing a design.

## Definitions

**Short-form specification —** The data in a short-form specification is extracted from a full data sheet with the same type number and title. For detailed information see the relevant data sheet or data handbook.

**Limiting values definition —** Limiting values given are in accordance with the Absolute Maximum Rating System (IEC 134). Stress above one or more of the limiting values may cause permanent damage to the device. These are stress ratings only and operation of the device at these or at any other conditions above those given in the Characteristics sections of the specification is not implied. Exposure to limiting values for extended periods may affect device reliability.

**Application information —** Applications that are described herein for any of these products are for illustrative purposes only. Philips Semiconductors make no representation or warranty that such applications will be suitable for the specified use without further testing or modification.

## Disclaimers

**Life support —** These products are not designed for use in life support appliances, devices or systems where malfunction of these products can reasonably be expected to result in personal injury. Philips Semiconductors customers using or selling these products for use in such applications do so at their own risk and agree to fully indemnify Philips Semiconductors for any damages resulting from such application.

**Right to make changes —** Philips Semiconductors reserves the right to make changes, without notice, in the products, including circuits, standard cells, and/or software, described or contained herein in order to improve design and/or performance. Philips Semiconductors assumes no responsibility or liability for the use of any of these products, conveys no license or title under any patent, copyright, or mask work right to these products, and makes no representations or warranties that these products are free from patent, copyright, or mask work right infringement, unless otherwise specified.

**Philips Semiconductors**
**811 East Arques Avenue**
**P.O. Box 3409**
**Sunnyvale, California 94088–3409**
**Telephone 800-234-7381**

© Copyright Philips Electronics North America Corporation 1998
All rights reserved. Printed in U.S.A.

print code Date of release: 05-96
Document order number: 9397-750-03466

Let's make things better.

Philips Semiconductors

PHILIPS

# OCEAN CHIPS
## Океан Электроники
### Поставка электронных компонентов

Компания «Океан Электроники» предлагает заключение долгосрочных отношений при поставках импортных электронных компонентов на взаимовыгодных условиях!

Наши преимущества:

- Поставка оригинальных импортных электронных компонентов напрямую с производств Америки, Европы и Азии, а так же с крупнейших складов мира;
- Широкая линейка поставок активных и пассивных импортных электронных компонентов (более 30 млн. наименований);
- Поставка сложных, дефицитных, либо снятых с производства позиций;
- Оперативные сроки поставки под заказ (от 5 рабочих дней);
- Экспресс доставка в любую точку России;
- Помощь Конструкторского Отдела и консультации квалифицированных инженеров;
- Техническая поддержка проекта, помощь в подборе аналогов, поставка прототипов;
- Поставка электронных компонентов под контролем ВП;
- Система менеджмента качества сертифицирована по Международному стандарту ISO 9001;
- При необходимости вся продукция военного и аэрокосмического назначения проходит испытания и сертификацию в лаборатории (по согласованию с заказчиком);
- Поставка специализированных компонентов военного и аэрокосмического уровня качества (Xilinx, Altera, Analog Devices, Intersil, Interpoint, Microsemi, Actel, Aeroflex, Peregrine, VPT, Syfer, Eurofarad, Texas Instruments, MS Kennedy, Miteq, Cobham, E2V, MA-COM, Hittite, Mini-Circuits, General Dynamics и др.);

Компания «Океан Электроники» является официальным дистрибьютором и эксклюзивным представителем в России одного из крупнейших производителей разъемов военного и аэрокосмического назначения **«JONHON»**, а так же официальным дистрибьютором и эксклюзивным представителем в России производителя высокотехнологичных и надежных решений для передачи СВЧ сигналов **«FORSTAR»**.

AVIC JONHON

**«JONHON»** (основан в 1970 г.)

Разъемы специального, военного и аэрокосмического назначения:

(Применяются в военной, авиационной, аэрокосмической, морской, железнодорожной, горно- и нефтедобывающей отраслях промышленности)

**«FORSTAR»** (основан в 1998 г.)

ВЧ соединители, коаксиальные кабели, кабельные сборки и микроволновые компоненты:

(Применяются в телекоммуникациях гражданского и специального назначения, в средствах связи, РЛС, а так же военной, авиационной и аэрокосмической отраслях промышленности).

FORSTAR®

Телефон: 8 (812) 309-75-97 (многоканальный)
Факс: 8 (812) 320-03-32
Электронная почта: ocean@oceanchips.ru
Web: http://oceanchips.ru/
Адрес: 198099, г. Санкт-Петербург, ул. Калинина, д. 2, корп. 4, лит. А