74LVC16373A; 74LVCH16373A

16-bit D-type transparent latch with 5 V tolerant inputs/outputs; 3-state

Rev. 9 — 15 February 2019 Product data sheet

1. General description

The 74LVC16373A and 74LVCH16373A are 16-bit D-type transparent latches featuring separate D-type inputs with bus hold (74LVCH16373A only) for each latch and 3-state outputs for bus-oriented applications. One Latch Enable (LE) input and one Output Enable ($\overline{OE}$) are provided for each octal. Inputs can be driven from either 3.3 V or 5 V devices. When disabled, up to 5.5 V can be applied to the outputs. These features allow the use of these devices in mixed 3.3 V and 5 V applications.

The device consists of two sections of eight D-type transparent latches with 3-state true outputs. When LE is HIGH, data at the Dn inputs enter the latches. In this condition, the latches are transparent, that is, the latch outputs change each time its corresponding D-input changes. The latches store the information that was present at the D-inputs one set-up time (t_{su}) preceding the HIGH-to-LOW transition of LE. When $\overline{OE}$ is LOW, the contents of the eight latches are available at the outputs. When $\overline{OE}$ is HIGH, the outputs go to the high impedance OFF-state. Operation of the $\overline{OE}$ input does not affect the state of the latches. Bus hold on the data inputs eliminates the need for external pull-up resistors to hold unused inputs.

2. Features and benefits

- 5 V tolerant inputs/outputs for interfacing with 5 V logic
- Wide supply voltage range from 1.2 V to 3.6 V
- CMOS low power consumption
- Multibyte flow-through standard pinout architecture
- Multiple low inductance supply pins for minimum noise and ground bounce
- Direct interface with TTL levels
- All data inputs have bus hold (74LVCH16373A only)
- High-impedance when V_{CC} = 0 V
- Complies with JEDEC standard:
  - JESD8-7A (1.65 V to 1.95 V)
  - JESD8-5A (2.3 V to 2.7 V)
  - JESD8-C/JESD36 (2.7 V to 3.6 V)
- ESD protection:
  - HBM JESD22-A114F exceeds 2000 V
  - MM JESD22-A115-B exceeds 200 V
  - CDM ANSI/ESDA/Jedec JS-002 exceeds 1000 V
- Specified from -40 °C to +85 °C and -40 °C to +125 °C

3. Ordering information

Table 1. Ordering information

Type number	Package			
	Temperature range	Name	Description	Version
74LVC16373ADGG	-40 °C to +125 °C	TSSOP48	plastic thin shrink small outline package; 48 leads; body width 6.1 mm	SOT362-1
74LVCH16373ADGG				
74LVC16373ADL	-40 °C to +125 °C	SSOP48	plastic shrink small outline package; 48 leads; body width 7.5 mm	SOT370-1
74LVC16373ADGV	-40 °C to +125 °C	TSSOP48 [1]	plastic thin shrink small outline package; 48 leads; body width 4.4 mm; lead pitch 0.4 mm	SOT480-1
74LVCH16373ADGV				

[1] Also known as TVSOP48.

4. Functional diagram

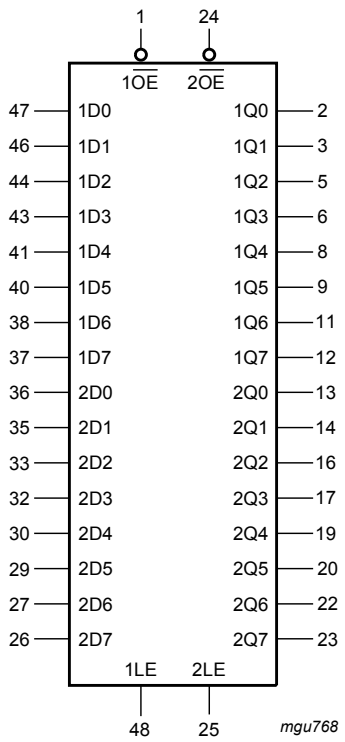

Fig. 1. Logic symbol

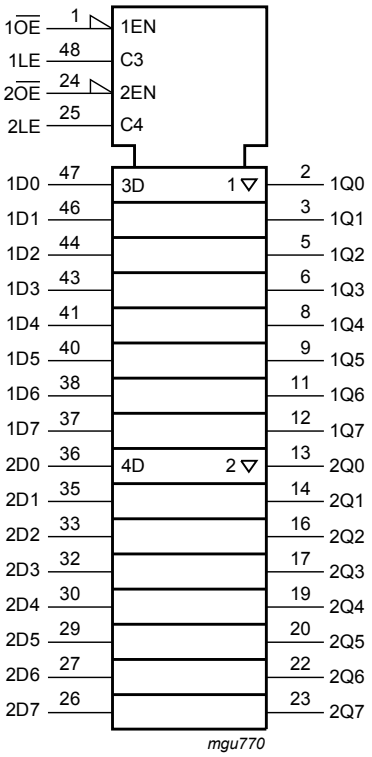

Fig. 2. IEC logic symbol

All information provided in this document is subject to legal disclaimers.

© Nexperia B.V. 2019. All rights reserved

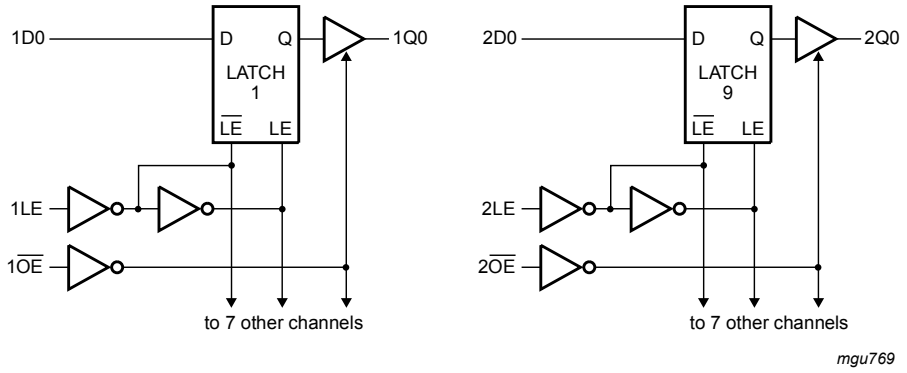

Fig. 3. Logic diagram

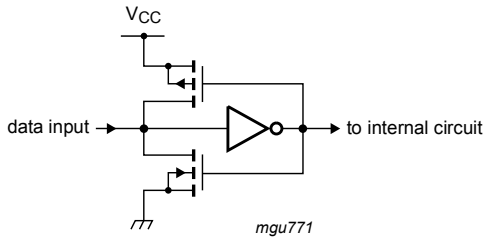

Fig. 4. Bus hold circuit

All information provided in this document is subject to legal disclaimers.

© Nexperia B.V. 2019. All rights reserved

5. Pinning information

5.1. Pinning

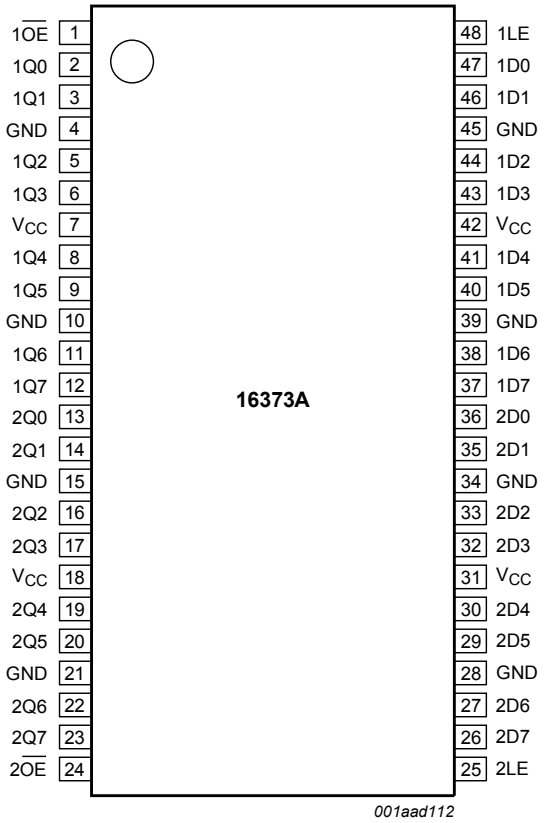

Fig. 5. Pin configuration SOT370-1 (SSOP48), SOT362-1 (TSSOP48) and SOT480-1 (TSSOP48)

5.2. Pin description

Table 2. Pin description

Symbol	Pin	Description
$1\overline{OE}$, $2\overline{OE}$	1, 24	output enable input (active LOW)
1LE, 2LE	48, 25	latch enable input (active HIGH)
GND	4, 10, 15, 21, 28, 34, 39, 45	ground (0 V)
V_{CC}	7, 18, 31, 42	supply voltage
1Q0 to 1Q7	2, 3, 5, 6, 8, 9, 11, 12	data output
2Q0 to 2Q7	13, 14, 16, 17, 19, 20, 22, 23	data output
1D0 to 1D7	47, 46, 44, 43, 41, 40, 38, 37	data input
2D0 to 2D7	36, 35, 33, 32, 30, 29, 27, 26	data input

All information provided in this document is subject to legal disclaimers.

© Nexperia B.V. 2019. All rights reserved

6. Functional description

Table 3. Function table

Per section of eight bits.

H = HIGH voltage level; h = HIGH voltage level one set-up time prior to the HIGH to LOW LE transition

L = LOW voltage level; l = LOW voltage level one set-up time prior to the HIGH to LOW LE transition

Z = high-impedance OFF-state

Operating modes	Input			Internal latch	Output nQ0 to nQ7
	$n\overline{OE}$	nLE	nDn		
Enable and read register (transparent mode)	L	H	L	L	L
	L	H	H	H	H
Latch and read register	L	L	l	L	L
	L	L	h	H	H
Latch register and disable outputs	H	L	l	L	Z
	H	L	h	H	Z

7. Limiting values

Table 4. Limiting values

In accordance with the Absolute Maximum Rating System (IEC 60134). Voltages are referenced to GND (ground = 0 V).

Symbol	Parameter	Conditions		Min	Max	Unit
V_{CC}	supply voltage			-0.5	+6.5	V
I_{IK}	input clamping current	$V_I < 0$		-50	-	mA
V_I	input voltage		[1]	-0.5	+6.5	V
I_{OK}	output clamping current	$V_O > V_{CC}$ or $V_O < 0$		-	±50	mA
V_O	output voltage	output HIGH or LOW state	[2]	-0.5	V_{CC} + 0.5	V
		output 3-state	[2]	-0.5	+6.5	V
I_O	output current	V_O = 0 V to V_{CC}		-	±50	mA
I_{CC}	supply current			-	100	mA
I_{GND}	ground current			-100	-	mA
T_{stg}	storage temperature			-65	+150	°C
P_{tot}	total power dissipation	T_{amb} = -40 °C to +125 °C	[3]	-	500	mW

[1] The minimum input voltage ratings may be exceeded if the input current ratings are observed.
[2] The output voltage ratings may be exceeded if the output current ratings are observed.
[3] Above 60 °C, the value of P_{tot} derates linearly with 5.5 mW/K.

All information provided in this document is subject to legal disclaimers.

© Nexperia B.V. 2019. All rights reserved

8. Recommended operating conditions

Table 5. Recommended operating conditions

Symbol	Parameter	Conditions	Min	Typ	Max	Unit
V_{CC}	supply voltage		1.65	-	3.6	V
		functional	1.2	-	3.6	V
V_I	input voltage		0	-	5.5	V
V_O	output voltage	output HIGH or LOW state	0	-	V_{CC}	V
		output 3-state	0	-	5.5	V
T_{amb}	ambient temperature	in free air	-40	-	+125	°C
Δt/ΔV	input transition rise and fall rate	V_{CC} = 1.2 V to 2.7 V	0	-	20	ns/V
		V_{CC} = 2.7 V to 3.6 V	0	-	10	ns/V

9. Static characteristics

Table 6. Static characteristics

At recommended operating conditions. Voltages are referenced to GND (ground = 0 V).

Symbol	Parameter	Conditions	-40 °C to +85 °C			-40 °C to +125 °C		Unit
			Min	Typ [1]	Max	Min	Max	
V_{IH}	HIGH-level input voltage	V_{CC} = 1.2 V	1.08	-	-	1.08	-	V
		V_{CC} = 1.65 V to 1.95 V	$0.65V_{CC}$	-	-	$0.65V_{CC}$	-	V
		V_{CC} = 2.3 V to 2.7 V	1.7	-	-	1.7	-	V
		V_{CC} = 2.7 V to 3.6 V	2.0	-	-	2.0	-	V
V_{IL}	LOW-level input voltage	V_{CC} = 1.2 V	-	-	0.12	-	0.12	V
		V_{CC} = 1.65 V to 1.95 V	-	-	$0.35V_{CC}$	-	$0.35V_{CC}$	V
		V_{CC} = 2.3 V to 2.7 V	-	-	0.7	-	0.7	V
		V_{CC} = 2.7 V to 3.6 V	-	-	0.8	-	0.8	V
V_{OH}	HIGH-level output voltage	$V_I = V_{IH}$ or V_{IL}						
		I_O = -100 μA; V_{CC} = 1.65 V to 3.6 V	V_{CC} - 0.2	-	-	V_{CC} - 0.3	-	V
		I_O = -4 mA; V_{CC} = 1.65 V	1.2	-	-	1.05	-	V
		I_O = -8 mA; V_{CC} = 2.3 V	1.8	-	-	1.65	-	V
		I_O = -12 mA; V_{CC} = 2.7 V	2.2	-	-	2.05	-	V
		I_O = -18 mA; V_{CC} = 3.0 V	2.4	-	-	2.25	-	V
		I_O = -24 mA; V_{CC} = 3.0 V	2.2	-	-	2.0	-	V
V_{OL}	LOW-level output voltage	$V_I = V_{IH}$ or V_{IL}						
		I_O = 100 μA; V_{CC} = 1.65 V to 3.6 V	-	-	0.2	-	0.3	V
		I_O = 4 mA; V_{CC} = 1.65 V	-	-	0.45	-	0.65	V
		I_O = 8 mA; V_{CC} = 2.3 V	-	-	0.6	-	0.8	V
		I_O = 12 mA; V_{CC} = 2.7 V	-	-	0.4	-	0.6	V
		I_O = 24 mA; V_{CC} = 3.0 V	-	-	0.55	-	0.8	V

All information provided in this document is subject to legal disclaimers.

© Nexperia B.V. 2019. All rights reserved

Symbol	Parameter	Conditions		-40 °C to +85 °C			-40 °C to +125 °C		Unit
				Min	Typ [1]	Max	Min	Max	
I_I	input leakage current	V_{CC} = 3.6 V; V_I = 5.5 V or GND	[2]	-	±0.1	±5	-	±20	μA
I_{OZ}	OFF-state output current	$V_I = V_{IH}$ or V_{IL}; V_{CC} = 3.6 V; V_O = 5.5 V or GND	[2]	-	±0.1	±5	-	±20	μA
I_{OFF}	power-off leakage current	V_{CC} = 0 V; V_I or V_O = 5.5 V		-	±0.1	±10	-	±20	μA
I_{CC}	supply current	V_{CC} = 3.6 V; $V_I = V_{CC}$ or GND; I_O = 0 A		-	0.1	20	-	80	μA
ΔI_{CC}	additional supply current	per input pin; V_{CC} = 2.7 V to 3.6 V; $V_I = V_{CC}$ - 0.6 V; I_O = 0 A		-	5	500	-	5000	μA
C_I	input capacitance	V_{CC} = 0 V to 3.6 V; V_I = GND to V_{CC}		-	5.0	-	-	-	pF
I_{BHL}	bus hold LOW current	V_{CC} = 1.65; V_I = 0.58 V	[3] [4]	10	-	-	10	-	μA
		V_{CC} = 2.3; V_I = 0.7 V		30	-	-	25	-	μA
		V_{CC} = 3.0; V_I = 0.8 V		75	-	-	60	-	μA
I_{BHH}	bus hold HIGH current	V_{CC} = 1.65; V_I = 1.07 V	[3] [4]	-10	-	-	-10	-	μA
		V_{CC} = 2.3; V_I = 1.7 V		-30	-	-	-25	-	μA
		V_{CC} = 3.0; V_I = 2.0 V		-75	-	-	-60	-	μA
I_{BHLO}	bus hold LOW overdrive current	V_{CC} = 1.95 V	[3] [5]	200	-	-	200	-	μA
		V_{CC} = 2.7 V		300	-	-	300	-	μA
		V_{CC} = 3.6 V		500	-	-	500	-	μA
I_{BHHO}	bus hold HIGH overdrive current	V_{CC} = 1.95 V	[3] [5]	-200	-	-	-200	-	μA
		V_{CC} = 2.7 V		-300	-	-	-300	-	μA
		V_{CC} = 3.6 V		-500	-	-	-500	-	μA

[1] All typical values are measured at V_{CC} = 3.3 V (unless stated otherwise) and T_{amb} = 25 °C.
[2] The bus hold circuit is switched off when $V_I > V_{CC}$ allowing 5.5 V on the input pin.
[3] Valid for data inputs (74LVCH16373A) only; control inputs do not have a bus hold circuit.
[4] The specified sustaining current at the data inputs holds the input below the specified V_I level.
[5] The specified overdrive current at the data input forces the data input to the opposite logic input state.

All information provided in this document is subject to legal disclaimers.

© Nexperia B.V. 2019. All rights reserved

10. Dynamic characteristics

Table 7. Dynamic characteristics

Voltages are referenced to GND (ground = 0 V). For test circuit see Fig. 10.

Symbol	Parameter	Conditions	-40 °C to +85 °C			-40 °C to +125 °C		Unit
			Min	Typ [1]	Max	Min	Max	
t_{pd}	propagation delay	Dn to Qn; see Fig. 6 [2]						
		V_{CC} = 1.2 V	-	12	-	-	-	ns
		V_{CC} = 1.65 V to 1.95 V	1.5	5.4	11.4	1.5	13.2	ns
		V_{CC} = 2.3 V to 2.7 V	1.0	2.9	5.7	1.0	6.6	ns
		V_{CC} = 2.7 V	1.5	2.9	4.9	1.5	6.5	ns
		V_{CC} = 3.0 V to 3.6 V	1.0	2.4	4.4	1.0	5.5	ns
		LE to Qn; see Fig. 7						
		V_{CC} = 1.2 V	-	14	-	-	-	ns
		V_{CC} = 1.65 V to 1.95 V	2.0	6.4	12.4	2.0	14.4	ns
		V_{CC} = 2.3 V to 2.7 V	1.5	3.4	6.1	1.5	7.1	ns
		V_{CC} = 2.7 V	1.5	3.0	5.3	1.5	7.0	ns
		V_{CC} = 3.0 V to 3.6 V	1.5	2.9	4.8	1.5	6.0	ns
t_{en}	enable time	$\overline{OE}$ to Qn; see Fig. 8 [2]						
		V_{CC} = 1.2 V	-	18	-	-	-	ns
		V_{CC} = 1.65 V to 1.95 V	1.5	5.5	12.4	1.5	14.3	ns
		V_{CC} = 2.3 V to 2.7 V	1.0	3.1	6.6	1.0	7.6	ns
		V_{CC} = 2.7 V	1.5	3.3	5.7	1.5	7.5	ns
		V_{CC} = 3.0 V to 3.6 V	1.0	2.5	4.9	1.0	6.5	ns
t_{dis}	disable time	$\overline{OE}$ to Qn; see Fig. 8 [2]						
		V_{CC} = 1.2 V	-	11	-	-	-	ns
		V_{CC} = 1.65 V to 1.95 V	2.8	4.5	9.1	2.8	10.5	ns
		V_{CC} = 2.3 V to 2.7 V	1.0	2.5	5.1	1.0	6.0	ns
		V_{CC} = 2.7 V	1.5	3.3	6.3	1.5	8.0	ns
		V_{CC} = 3.0 V to 3.6 V	1.5	3.1	5.4	1.5	7.0	ns
t_W	pulse width	LE HIGH; see Fig. 7						
		V_{CC} = 1.65 V to 1.95 V	5.0	-	-	5.0	-	ns
		V_{CC} = 2.3 V to 2.7 V	4.0	-	-	4.0	-	ns
		V_{CC} = 2.7 V	3.0	-	-	3.0	-	ns
		V_{CC} = 3.0 V to 3.6 V	3.0	2.0	-	3.0	-	ns
t_{su}	set-up time	Dn to LE; see Fig. 9						
		V_{CC} = 1.65 V to 1.95 V	3.0	-	-	3.0	-	ns
		V_{CC} = 2.3 V to 2.7 V	2.5	-	-	2.5	-	ns
		V_{CC} = 2.7 V	2.0	-	-	2.0	-	ns
		V_{CC} = 3.0 V to 3.6 V	2.0	1.0	-	2.0	-	ns
t_h	hold time	Dn to LE; see Fig. 9						
		V_{CC} = 1.65 V to 1.95 V	2.5	-	-	2.5	-	ns
		V_{CC} = 2.3 V to 2.7 V	2.0	-	-	2.0	-	ns
		V_{CC} = 2.7 V	0.9	-	-	0.9	-	ns
		V_{CC} = 3.0 V to 3.6 V	+0.9	-1.0	-	+0.9	-	ns

All information provided in this document is subject to legal disclaimers.

© Nexperia B.V. 2019. All rights reserved

Symbol	Parameter	Conditions		-40 °C to +85 °C			-40 °C to +125 °C		Unit
				Min	Typ [1]	Max	Min	Max	
$t_{sk(o)}$	output skew time	V_{CC} = 3.0 V to 3.6 V	[3]	-	-	1.0	-	1.5	ns
C_{PD}	power dissipation capacitance	per input; V_I = GND to V_{CC}	[4]						
		V_{CC} = 1.65 V to 1.95 V		-	10.8	-	-	-	pF
		V_{CC} = 2.3 V to 2.7 V		-	13.0	-	-	-	pF
		V_{CC} = 3.0 V to 3.6 V		-	15.0	-	-	-	pF

[1] Typical values are measured at T_{amb} = 25 °C and V_{CC} = 1.2 V, 1.8 V, 2.5 V, 2.7 V and 3.3 V respectively.

[2] t_{pd} is the same as t_{PLH} and t_{PHL}.
t_{en} is the same as t_{PZL} and t_{PZH}.
t_{dis} is the same as t_{PLZ} and t_{PHZ}.

[3] Skew between any two outputs of the same package switching in the same direction. This parameter is guaranteed by design.

[4] C_{PD} is used to determine the dynamic power dissipation (P_D in μW).
$P_D = C_{PD} \times V_{CC}^2 \times f_i \times N + \Sigma(C_L \times V_{CC}^2 \times f_o)$ where:
f_i = input frequency in MHz; f_o = output frequency in MHz
C_L = output load capacitance in pF
V_{CC} = supply voltage in Volts
N = number of inputs switching
$\Sigma(C_L \times V_{CC}^2 \times f_o)$ = sum of the outputs

10.1. Waveforms and test circuit

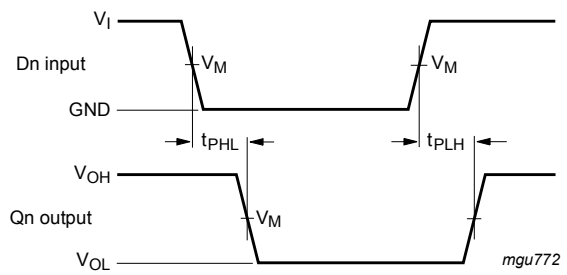

Measurement points are given in Table 8.

V_{OL} and V_{OH} are typical output voltage levels that occur with the output load.

Fig. 6. Input (Dn) to output (Qn) propagation delays

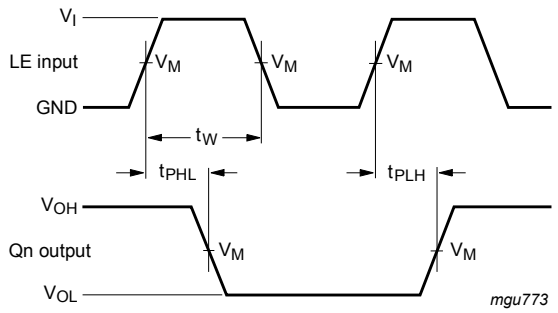

Measurement points are given in Table 8.

V_{OL} and V_{OH} are typical output voltage levels that occur with the output load.

Fig. 7. Latch enable input (LE) pulse width, and the latch enable input to output (Qn) propagation delays

All information provided in this document is subject to legal disclaimers.

© Nexperia B.V. 2019. All rights reserved

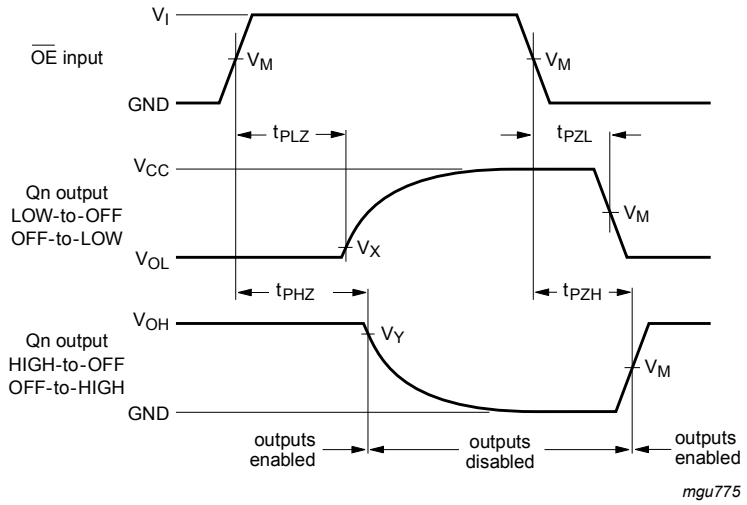

Measurement points are given in Table 8.

V_{OL} and V_{OH} are typical output voltage levels that occur with the output load.

Fig. 8. 3-state enable and disable times

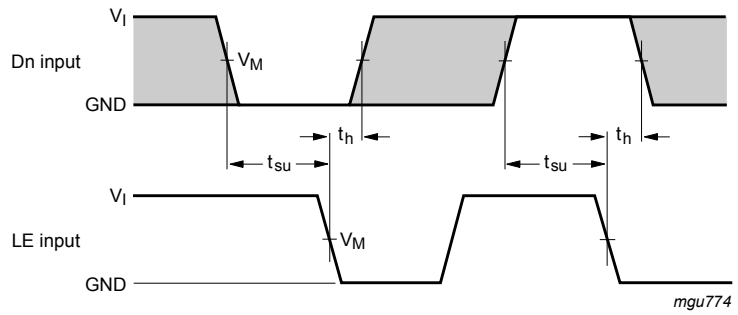

Measurement points are given in Table 8.

V_{OL} and V_{OH} are typical output voltage levels that occur with the output load.

The shaded areas indicate when the input is permitted to change for predictable output performance.

Fig. 9. Data set-up and hold times for the Dn input to the LE input

Table 8. Measurement points

Supply voltage	Input		Output		
V_{CC}	V_I	V_M	V_M	V_X	V_Y
1.2 V	V_{CC}	0.5 × V_{CC}	0.5 × V_{CC}	V_{OL} + 0.15 V	V_{OH} - 0.15 V
1.65 V to 1.95 V	V_{CC}	0.5 × V_{CC}	0.5 × V_{CC}	V_{OL} + 0.15 V	V_{OH} - 0.15 V
2.3 V to 2.7 V	V_{CC}	0.5 × V_{CC}	0.5 × V_{CC}	V_{OL} + 0.15 V	V_{OH} - 0.15 V
2.7 V	2.7 V	1.5 V	1.5 V	V_{OL} + 0.3 V	V_{OH} - 0.3 V
3.0 V to 3.6 V	2.7 V	1.5 V	1.5 V	V_{OL} + 0.3 V	V_{OH} - 0.3 V

All information provided in this document is subject to legal disclaimers.

© Nexperia B.V. 2019. All rights reserved

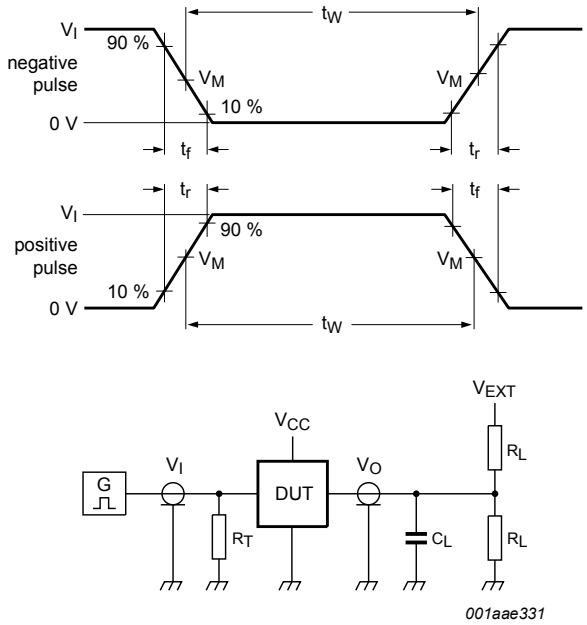

Test data is given in Table 9.

Definitions for test circuit:

R_L = Load resistance.

C_L = Load capacitance including jig and probe capacitance.

R_T = Termination resistance should be equal to output impedance Z_o of the pulse generator.

V_{EXT} = External voltage for measuring switching times.

Fig. 10. Test circuit for measuring switching times

Table 9. Test data

Supply voltage	Input		Load		V_{EXT}		
V_{CC}	V_I	t_r, t_f	C_L	R_L	t_{PLH}, t_{PHL}	t_{PLZ}, t_{PZL}	t_{PHZ}, t_{PZH}
1.2 V	V_{CC}	≤ 2 ns	30 pF	1 kΩ	open	2 × V_{CC}	GND
1.65 V to 1.95 V	V_{CC}	≤ 2 ns	30 pF	1 kΩ	open	2 × V_{CC}	GND
2.3 V to 2.7 V	V_{CC}	≤ 2 ns	30 pF	500 Ω	open	2 × V_{CC}	GND
2.7 V	2.7 V	≤ 2.5 ns	50 pF	500 Ω	open	2 × V_{CC}	GND
3.0 V to 3.6 V	2.7 V	≤ 2.5 ns	50 pF	500 Ω	open	2 × V_{CC}	GND

All information provided in this document is subject to legal disclaimers.

© Nexperia B.V. 2019. All rights reserved

11. Package outline

SSOP48: plastic shrink small outline package; 48 leads; body width 7.5 mm **SOT370-1**

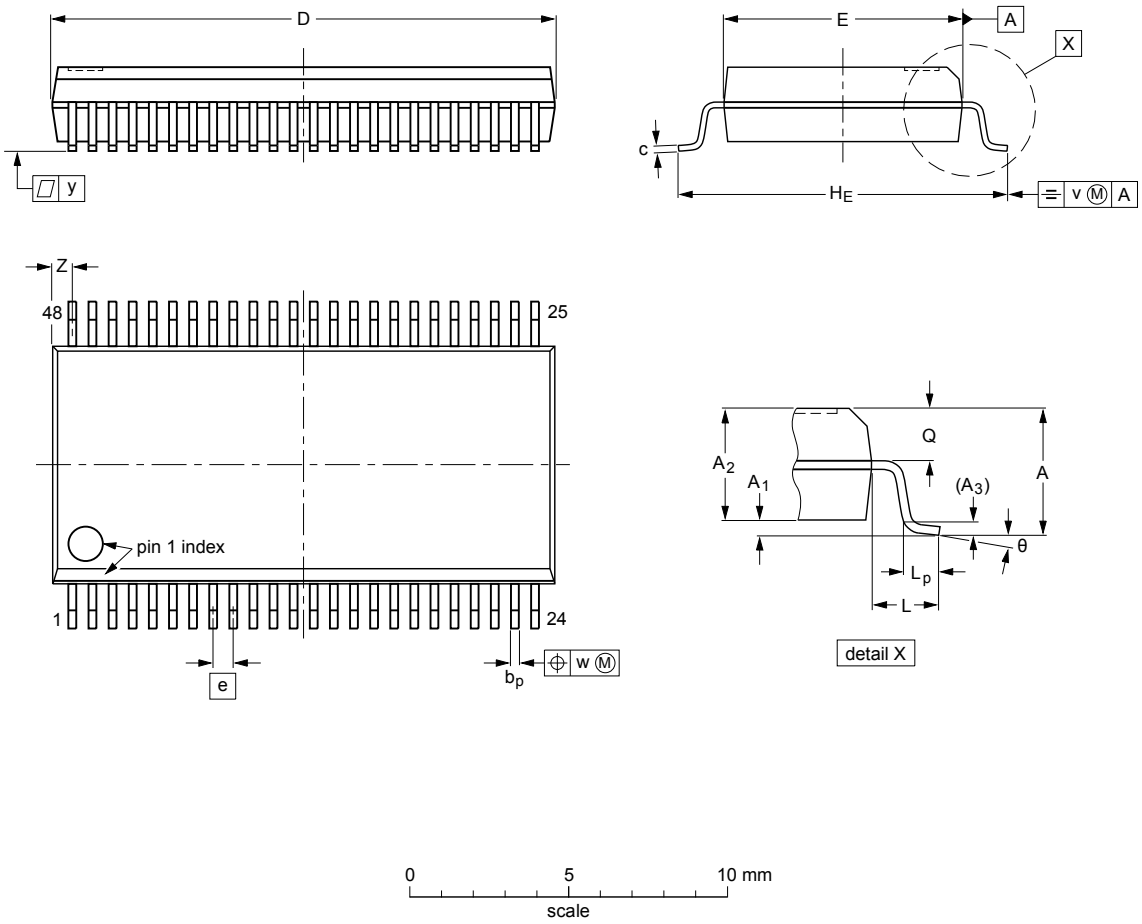

DIMENSIONS (mm are the original dimensions)

UNIT	A max.	A_1	A_2	A_3	b_p	c	D (1)	E (1)	e	H_E	L	L_p	Q	v	w	y	Z (1)	θ
mm	2.8	0.4 0.2	2.35 2.20	0.25	0.3 0.2	0.22 0.13	16.00 15.75	7.6 7.4	0.635	10.4 10.1	1.4	1.0 0.6	1.2 1.0	0.25	0.18	0.1	0.85 0.40	8° 0°

Note

1. Plastic or metal protrusions of 0.25 mm maximum per side are not included.

OUTLINE VERSION	REFERENCES				EUROPEAN PROJECTION	ISSUE DATE
	IEC	JEDEC	JEITA			
SOT370-1		MO-118				~~99-12-27~~ 03-02-19

Fig. 11. Package outline SOT370-1 (SSOP48)

All information provided in this document is subject to legal disclaimers.

© Nexperia B.V. 2019. All rights reserved

TSSOP48: plastic thin shrink small outline package; 48 leads; body width 6.1 mm **SOT362-1**

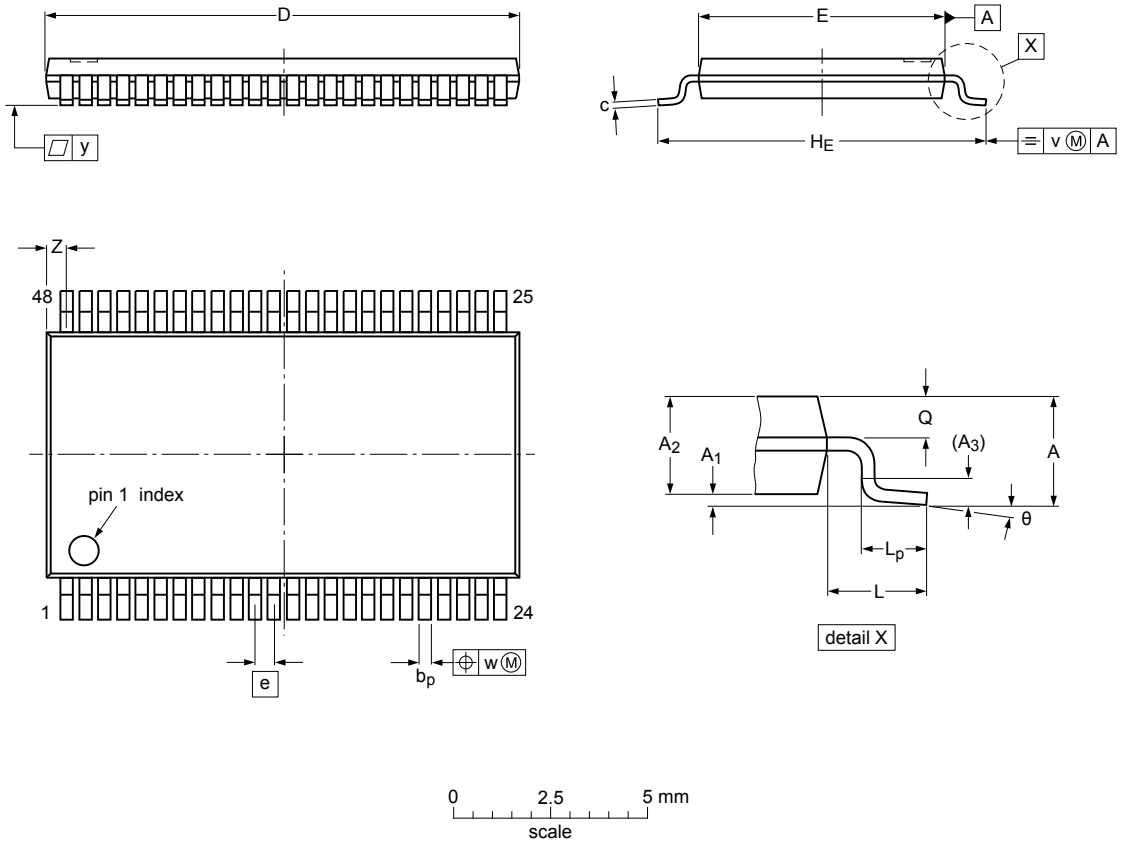

Dimensions (mm are the original dimensions)

Unit		A	A_1	A_2	A_3	b_p	c	D(1)	E(2)	e	H_E	L	L_p	Q	v	w	y	Z	θ
mm	max		0.15	1.05		0.28	0.2	12.6	6.2		8.3		0.8	0.50				0.8	8°
	nom	1.2			0.25					0.5		1			0.25	0.08	0.1		
	min		0.05	0.85		0.17	0.1	12.4	6.0		7.9		0.4	0.35				0.4	0°

Note
1. Plastic or metal protrusions of 0.15 mm maximum per side are not included.
2. Plastic interlead protrusions of 0.25 mm maximum per side are not included.

sot362-1_po

Outline version	References				European projection	Issue date
	IEC	JEDEC	JEITA			
SOT362-1		MO-153				~~03-02-19~~ 13-08-05

Fig. 12. Package outline SOT362-1 (TSSOP48)

All information provided in this document is subject to legal disclaimers.

© Nexperia B.V. 2019. All rights reserved

TSSOP48: plastic thin shrink small outline package; 48 leads; body width 4.4 mm; lead pitch 0.4 mm **SOT480-1**

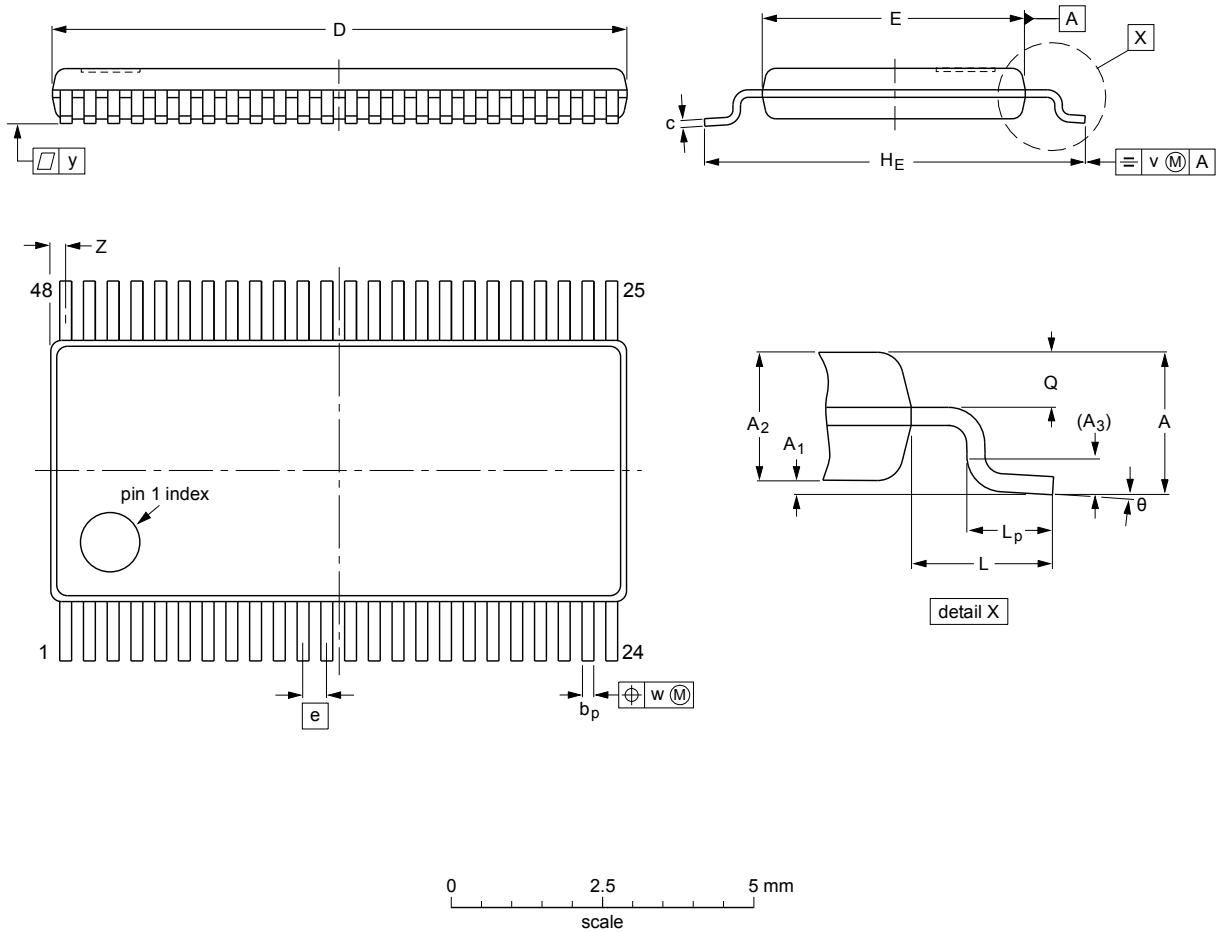

DIMENSIONS (mm are the original dimensions)

UNIT	A max.	A_1	A_2	A_3	b_p	c	D (1)	E (2)	e	H_E	L	L_p	Q	v	w	y	Z (1)	θ
mm	1.1	0.15 0.05	0.95 0.85	0.25	0.23 0.13	0.20 0.09	9.8 9.6	4.5 4.3	0.4	6.6 6.2	1	0.7 0.5	0.4 0.3	0.2	0.07	0.08	0.4 0.1	8° 0°

Notes

1. Plastic or metal protrusions of 0.15 mm maximum per side are not included.
2. Plastic interlead protrusions of 0.25 mm maximum per side are not included.

OUTLINE VERSION	REFERENCES				EUROPEAN PROJECTION	ISSUE DATE
	IEC	JEDEC	JEITA			
SOT480-1		MO-153				~~99-12-27~~ 03-02-18

Fig. 13. Package outline SOT480-1 (TSSOP48)

All information provided in this document is subject to legal disclaimers.

© Nexperia B.V. 2019. All rights reserved

12. Abbreviations

Table 10. Abbreviations

Acronym	Description
CDM	Charged Device Model
CMOS	Complementary Metal-Oxide Semiconductor
DUT	Device Under Test
ESD	ElectroStatic Discharge
HBM	Human Body Model
MM	Machine Model
TTL	Transistor-Transistor Logic

13. Revision history

Table 11. Revision history

Document ID	Release date	Data sheet status	Change notice	Supersedes
74LVC_LVCH16373A v.9	20190215	Product data sheet	-	74LVC_LVCH16373A v.8
Modifications:	• The format of this data sheet has been redesigned to comply with the identity guidelines of Nexperia. • Legal texts have been adapted to the new company name where appropriate. • Type numbers 74LVCH16373ADL (SOT370-1) removed. • Type numbers 74LVC16373ADGV and 74LVCH16373ADGV (SOT480-1) added.			
74LVC_LVCH16373A v.8	20140106	Product data sheet	-	74LVC_LVCH16373A v.7
Modifications:	• General description corrected (errata).			
74LVC_LVCH16373A v.7	20130118	Product data sheet	-	74LVC_LVCH16373A v.6
Modifications:	• The format of this data sheet has been redesigned to comply with the new identity guidelines of NXP Semiconductors. • Legal texts have been adapted to the new company name where appropriate. • Table 5, Table 6, Table 7, Table 8 and Table 9: values added for lower voltage ranges.			
74LVC_LVCH16373A v.6	20031208	Product specification	-	74LVC_LVCH16373A v.5
74LVC_LVCH16373A v.5	20021002	Product specification	-	74LVC_H16373A v.4
74LVC_H16373A v.4	19980317	Product specification	-	74LVC16373A_ 74LVCH16373A v.3
74LVC16373A_ 74LVCH16373A v.3	19980317	Product specification	-	74LVC16373A v.2
74LVC16373A v.2	19970822	Product specification	-	74LVC16373A v.1
74LVC16373A v.1	19960108	-	-	-

All information provided in this document is subject to legal disclaimers.

© Nexperia B.V. 2019. All rights reserved

14. Legal information

Data sheet status

Document status [1][2]	Product status [3]	Definition
Objective [short] data sheet	Development	This document contains data from the objective specification for product development.
Preliminary [short] data sheet	Qualification	This document contains data from the preliminary specification.
Product [short] data sheet	Production	This document contains the product specification.

[1] Please consult the most recently issued document before initiating or completing a design.
[2] The term 'short data sheet' is explained in section "Definitions".
[3] The product status of device(s) described in this document may have changed since this document was published and may differ in case of multiple devices. The latest product status information is available on the internet at https://www.nexperia.com.

Definitions

Draft — The document is a draft version only. The content is still under internal review and subject to formal approval, which may result in modifications or additions. Nexperia does not give any representations or warranties as to the accuracy or completeness of information included herein and shall have no liability for the consequences of use of such information.

Short data sheet — A short data sheet is an extract from a full data sheet with the same product type number(s) and title. A short data sheet is intended for quick reference only and should not be relied upon to contain detailed and full information. For detailed and full information see the relevant full data sheet, which is available on request via the local Nexperia sales office. In case of any inconsistency or conflict with the short data sheet, the full data sheet shall prevail.

Product specification — The information and data provided in a Product data sheet shall define the specification of the product as agreed between Nexperia and its customer, unless Nexperia and customer have explicitly agreed otherwise in writing. In no event however, shall an agreement be valid in which the Nexperia product is deemed to offer functions and qualities beyond those described in the Product data sheet.

Disclaimers

Limited warranty and liability — Information in this document is believed to be accurate and reliable. However, Nexperia does not give any representations or warranties, expressed or implied, as to the accuracy or completeness of such information and shall have no liability for the consequences of use of such information. Nexperia takes no responsibility for the content in this document if provided by an information source outside of Nexperia.

In no event shall Nexperia be liable for any indirect, incidental, punitive, special or consequential damages (including - without limitation - lost profits, lost savings, business interruption, costs related to the removal or replacement of any products or rework charges) whether or not such damages are based on tort (including negligence), warranty, breach of contract or any other legal theory.

Notwithstanding any damages that customer might incur for any reason whatsoever, Nexperia's aggregate and cumulative liability towards customer for the products described herein shall be limited in accordance with the Terms and conditions of commercial sale of Nexperia.

Right to make changes — Nexperia reserves the right to make changes to information published in this document, including without limitation specifications and product descriptions, at any time and without notice. This document supersedes and replaces all information supplied prior to the publication hereof.

Suitability for use — Nexperia products are not designed, authorized or warranted to be suitable for use in life support, life-critical or safety-critical systems or equipment, nor in applications where failure or malfunction of an Nexperia product can reasonably be expected to result in personal injury, death or severe property or environmental damage. Nexperia and its suppliers accept no liability for inclusion and/or use of Nexperia products in such equipment or applications and therefore such inclusion and/or use is at the customer's own risk.

Quick reference data — The Quick reference data is an extract of the product data given in the Limiting values and Characteristics sections of this document, and as such is not complete, exhaustive or legally binding.

Applications — Applications that are described herein for any of these products are for illustrative purposes only. Nexperia makes no representation or warranty that such applications will be suitable for the specified use without further testing or modification.

Customers are responsible for the design and operation of their applications and products using Nexperia products, and Nexperia accepts no liability for any assistance with applications or customer product design. It is customer's sole responsibility to determine whether the Nexperia product is suitable and fit for the customer's applications and products planned, as well as for the planned application and use of customer's third party customer(s). Customers should provide appropriate design and operating safeguards to minimize the risks associated with their applications and products.

Nexperia does not accept any liability related to any default, damage, costs or problem which is based on any weakness or default in the customer's applications or products, or the application or use by customer's third party customer(s). Customer is responsible for doing all necessary testing for the customer's applications and products using Nexperia products in order to avoid a default of the applications and the products or of the application or use by customer's third party customer(s). Nexperia does not accept any liability in this respect.

Limiting values — Stress above one or more limiting values (as defined in the Absolute Maximum Ratings System of IEC 60134) will cause permanent damage to the device. Limiting values are stress ratings only and (proper) operation of the device at these or any other conditions above those given in the Recommended operating conditions section (if present) or the Characteristics sections of this document is not warranted. Constant or repeated exposure to limiting values will permanently and irreversibly affect the quality and reliability of the device.

Terms and conditions of commercial sale — Nexperia products are sold subject to the general terms and conditions of commercial sale, as published at http://www.nexperia.com/profile/terms, unless otherwise agreed in a valid written individual agreement. In case an individual agreement is concluded only the terms and conditions of the respective agreement shall apply. Nexperia hereby expressly objects to applying the customer's general terms and conditions with regard to the purchase of Nexperia products by customer.

No offer to sell or license — Nothing in this document may be interpreted or construed as an offer to sell products that is open for acceptance or the grant, conveyance or implication of any license under any copyrights, patents or other industrial or intellectual property rights.

Export control — This document as well as the item(s) described herein may be subject to export control regulations. Export might require a prior authorization from competent authorities.

Non-automotive qualified products — Unless this data sheet expressly states that this specific Nexperia product is automotive qualified, the product is not suitable for automotive use. It is neither qualified nor tested in accordance with automotive testing or application requirements. Nexperia accepts no liability for inclusion and/or use of non-automotive qualified products in automotive equipment or applications.

In the event that customer uses the product for design-in and use in automotive applications to automotive specifications and standards, customer (a) shall use the product without Nexperia's warranty of the product for such automotive applications, use and specifications, and (b) whenever customer uses the product for automotive applications beyond Nexperia's specifications such use shall be solely at customer's own risk, and (c) customer fully indemnifies Nexperia for any liability, damages or failed product claims resulting from customer design and use of the product for automotive applications beyond Nexperia's standard warranty and Nexperia's product specifications.

Translations — A non-English (translated) version of a document is for reference only. The English version shall prevail in case of any discrepancy between the translated and English versions.

Trademarks

Notice: All referenced brands, product names, service names and trademarks are the property of their respective owners.

All information provided in this document is subject to legal disclaimers.

© Nexperia B.V. 2019. All rights reserved

Contents

1. General description.....1
2. Features and benefits.....1
3. Ordering information.....2
4. Functional diagram.....2
5. Pinning information.....4
5.1. Pinning.....4
5.2. Pin description.....4
6. Functional description.....5
7. Limiting values.....5
8. Recommended operating conditions.....6
9. Static characteristics.....6
10. Dynamic characteristics.....8
10.1. Waveforms and test circuit.....9
11. Package outline.....12
12. Abbreviations.....15
13. Revision history.....15
14. Legal information.....16

© Nexperia B.V. 2019. All rights reserved

For more information, please visit: http://www.nexperia.com
For sales office addresses, please send an email to: salesaddresses@nexperia.com
Date of release: 15 February 2019

OCEAN CHIPS
Океан Электроники
Поставка электронных компонентов

Компания «Океан Электроники» предлагает заключение долгосрочных отношений при поставках импортных электронных компонентов на взаимовыгодных условиях!

Наши преимущества:

- Поставка оригинальных импортных электронных компонентов напрямую с производств Америки, Европы и Азии, а так же с крупнейших складов мира;
- Широкая линейка поставок активных и пассивных импортных электронных компонентов (более 30 млн. наименований);
- Поставка сложных, дефицитных, либо снятых с производства позиций;
- Оперативные сроки поставки под заказ (от 5 рабочих дней);
- Экспресс доставка в любую точку России;
- Помощь Конструкторского Отдела и консультации квалифицированных инженеров;
- Техническая поддержка проекта, помощь в подборе аналогов, поставка прототипов;
- Поставка электронных компонентов под контролем ВП;
- Система менеджмента качества сертифицирована по Международному стандарту ISO 9001;
- При необходимости вся продукция военного и аэрокосмического назначения проходит испытания и сертификацию в лаборатории (по согласованию с заказчиком);
- Поставка специализированных компонентов военного и аэрокосмического уровня качества (Xilinx, Altera, Analog Devices, Intersil, Interpoint, Microsemi, Actel, Aeroflex, Peregrine, VPT, Syfer, Eurofarad, Texas Instruments, MS Kennedy, Miteq, Cobham, E2V, MA-COM, Hittite, Mini-Circuits, General Dynamics и др.);

Компания «Океан Электроники» является официальным дистрибьютором и эксклюзивным представителем в России одного из крупнейших производителей разъемов военного и аэрокосмического назначения **«JONHON»**, а так же официальным дистрибьютором и эксклюзивным представителем в России производителя высокотехнологичных и надежных решений для передачи СВЧ сигналов **«FORSTAR»**.

AVIC JONHON

«JONHON» (основан в 1970 г.)

Разъемы специального, военного и аэрокосмического назначения:

(Применяются в военной, авиационной, аэрокосмической, морской, железнодорожной, горно- и нефтедобывающей отраслях промышленности)

«FORSTAR» (основан в 1998 г.)

ВЧ соединители, коаксиальные кабели, кабельные сборки и микроволновые компоненты:

(Применяются в телекоммуникациях гражданского и специального назначения, в средствах связи, РЛС, а так же военной, авиационной и аэрокосмической отраслях промышленности).

FORSTAR®

Телефон: 8 (812) 309-75-97 (многоканальный)
Факс: 8 (812) 320-03-32
Электронная почта: ocean@oceanchips.ru
Web: http://oceanchips.ru/
Адрес: 198099, г. Санкт-Петербург, ул. Калинина, д. 2, корп. 4, лит. А