Data Sheet July 11, 2005 FN2970.4

## CMOS Programmable Intervel Timer

The Intersil 82C54 is a high performance CMOS Programmable Interval Timer manufactured using an advanced 2 micron CMOS process.

The 82C54 has three independently programmable and functional 16-bit counters, each capable of handling clock input frequencies of up to 8MHz (82C54) or 10MHz (82C54-10) or 12MHz (82C54-12).

The high speed and industry standard configuration of the 82C54 make it compatible with the Intersil 80C86, 80C88, and 80C286 CMOS microprocessors along with many other industry standard processors. Six programmable timer modes allow the 82C54 to be used as an event counter, elapsed time indicator, programmable one-shot, and many other applications. Static CMOS circuit design insures low power operation.

The Intersil advanced CMOS process results in a significant reduction in power with performance equal to or greater than existing equivalent products.

## Features

- 8MHz to 12MHz Clock Input Frequency
- Compatible with NMOS 8254
  - Enhanced Version of NMOS 8253
- Three Independent 16-Bit Counters
- Six Programmable Counter Modes
- Status Read Back Command
- Binary or BCD Counting
- Fully TTL Compatible
- Single 5V Power Supply
- Low Power
  - ICCSB. . . . . .10μA
  - ICCOP . . . . . 10mA at 8MHz
- Operating Temperature Ranges
  - CX82C54 . . . . . $0^{o}$C to $+70^{o}$C
  - IX82C54 . . . . . $-40^{o}$C to $+85^{o}$C
  - MD82C54 . . . . . $-55^{o}$C to $+125^{o}$C
- Pb-Free Plus Anneal Available (RoHS Compliant)

## Pinouts

**82C54 (PDIP, CERDIP)**
TOP VIEW

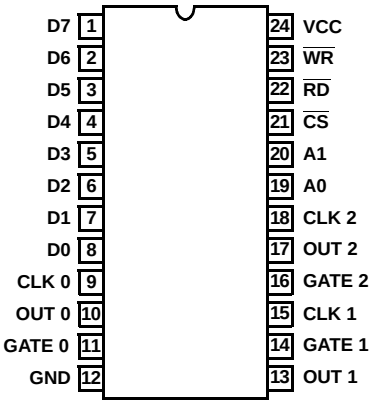


**82C54 (PLCC/CLCC)**
TOP VIEW

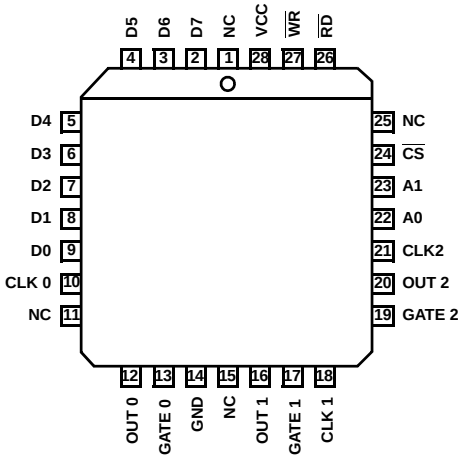




CAUTION: These devices are sensitive to electrostatic discharge; follow proper IC Handling Procedures.
1-888-INTERSIL or 1-888-468-3774 | Intersil (and design) is a registered trademark of Intersil Americas Inc.
Copyright © Intersil Americas Inc. 2003, 2005. All Rights Reserved.
All other trademarks mentioned are the property of their respective owners.

## Ordering Information

| PART NUMBERS | | | TEMPERATURE RANGE | PACKAGE | PKG. DWG. # |
|---|---|---|---|---|---|
| 8MHz | 10MHz | 12MHz | | | |
| CP82C54 | CP82C54-10 | CP82C54-12 | $0^{o}$C to $+70^{o}$C | 24 Lead PDIP | E24.6 |
| CP82C54Z (See Note) | CP82C54-10Z (See Note) | CP82C54-12Z (See Note) | $0^{o}$C to $+70^{o}$C | 24 Lead PDIP** (Pb-free) | E24.6 |
| CS82C54* | CS82C54-10* | CS82C54-12 | $0^{o}$C to $+70^{o}$C | 28 Lead PLCC | N28.45 |
| CS82C54Z* (See Note) | CS82C54-10Z* (See Note) | CS82C54-12Z* (See Note) | $0^{o}$C to $+70^{o}$C | 28 Lead PLCC (Pb-free) | N28.45 |
| ID82C54 | - | - | $-40^{o}$C to $+85^{o}$C | 24 Lead CERDIP | F24.6 |
| IP82C54 | IP82C54-10 | - | $-40^{o}$C to $+85^{o}$C | 24 Lead PDIP | E24.6 |
| IP82C54Z (See Note) | IP82C54-10Z (See Note) | - | $-40^{o}$C to $+85^{o}$C | 24 Lead PDIP** (Pb-free) | E24.6 |
| IS82C54* | IS82C54-10* | - | $-40^{o}$C to $+85^{o}$C | 28 Lead PLCC | N28.45 |
| IS82C54Z (See Note) | IS82C54-10Z (See Note) | - | $-40^{o}$C to $+85^{o}$C | 28 Lead PLCC (Pb-free) | N28.45 |
| MD82C54/B | - | - | $-55^{o}$C to $+125^{o}$C | 24 Lead CERDIP | F24.6 |
| SMD # 8406501JA | - | - | $-55^{o}$C to $+125^{o}$C | 24 Lead CERDIP | F24.6 |
| SMD# 84065013A | - | 84065023A | $-55^{o}$C to $+125^{o}$C | 28 Lead CLCC | J28.A |

Contact factory for availability.

*Add “96” suffix for tape and reel.

**Pb-free PDIPs can be used for through hole wave solder processing only. They are not intended for use in Reflow solder processing applications.

NOTE: Intersil Pb-free plus anneal products employ special Pb-free material sets; molding compounds/die attach materials and 100% matte tin plate termination finish, which are RoHS compliant and compatible with both SnPb and Pb-free soldering operations. Intersil Pb-free products are MSL classified at Pb-free peak reflow temperatures that meet or exceed the Pb-free requirements of IPC/JEDEC J STD-020.

## Absolute Maximum Ratings

Supply Voltage . . . . . +8.0V
Input, Output or I/O Voltage . . . . . GND-0.5V to $V_{CC}$ +0.5V
ESD Classification . . . . . Class 1

## Operating Conditions

Operating Voltage Range. . . . . +4.5V to +5.5V
Operating Temperature Range
CX82C54 . . . . . $0^oC$ to $+70^oC$
IX82C54 . . . . . $-40^oC$ to $+85^oC$
MD82C54 . . . . . $-55^oC$ to $+125^oC$

## Thermal Information

| Thermal Resistance (Typical) | $\theta_{JA}$ ($^oC/W$) | $\theta_{JC}$ ($^oC/W$) |
|---|---|---|
| CERDIP Package. . . . . | 55 | 12 |
| CLCC Package. . . . . | 65 | 14 |
| PDIP Package*. . . . . | 55 | N/A |
| PLCC Package. . . . . | 60 | N/A |

Storage Temperature Range . . . . . $-65^oC$ to $+150^oC$
Maximum Junction Temperature Ceramic Package. . . . . $+175^oC$
Maximum Junction Temperature Plastic Package . . . . . $+150^oC$
Maximum Lead Temperature Package (Soldering 10s). . . . . $+300^oC$
(PLCC - Lead Tips Only)

*Pb-free PDIPs can be used for through hole wave solder processing only. They are not intended for use in Reflow solder processing applications.

## Die Characteristics

Gate Count . . . . . 2250 Gates

*CAUTION: Stresses above those listed in "Absolute Maximum Ratings" may cause permanent damage to the device. This is a stress only rating and operation of the device at these or any other conditions above those indicated in the operational sections of this specification is not implied.*

## DC Electrical Specifications

$V_{CC}$ = +5.0V ± 10%, Includes all Temperature Ranges

| SYMBOL | PARAMETER | MIN | MAX | UNITS | TEST CONDITIONS |
|---|---|---|---|---|---|
| VIH | Logical One Input Voltage | 2.0 | - | V | CX82C54, IX82C54 |
| | | 2.2 | - | V | MD82C54 |
| VIL | Logical Zero Input Voltage | - | 0.8 | V | - |
| VOH | Output HIGH Voltage | 3.0 | - | V | IOH = -2.5mA |
| | | $V_{CC}$ -0.4 | - | V | IOH = -100µA |
| VOL | Output LOW Voltage | - | 0.4 | V | IOL = +2.5mA |
| II | Input Leakage Current | -1 | +1 | µA | VIN = GND or $V_{CC}$<br>DIP Pins 9,11,14-16,18-23 |
| IO | Output Leakage Current | -10 | +10 | µA | VOUT = GND or $V_{CC}$<br>DIP Pins 1-8 |
| ICCSB | Standby Power Supply Current | - | 10 | µA | $V_{CC}$ = 5.5V, VIN = GND or $V_{CC}$,<br>Outputs Open, Counters Programmed |
| ICCOP | Operating Power Supply Current | - | 10 | mA | $V_{CC}$ = 5.5V,<br>CLK0 = CLK1 = CLK2 = 8MHz,<br>VIN = GND or $V_{CC}$,<br>Outputs Open |

## Capacitance

$T_A$ = $+25^oC$; All Measurements Referenced to Device GND, Note 1

| SYMBOL | PARAMETER | TYP | UNITS | TEST CONDITIONS |
|---|---|---|---|---|
| CIN | Input Capacitance | 20 | pF | FREQ = 1MHz |
| COUT | Output Capacitance | 20 | pF | FREQ = 1MHz |
| CI/O | I/O Capacitance | 20 | pF | FREQ = 1MHz |

NOTE:

1. Not tested, but characterized at initial design and at major process/design changes.

## AC Electrical Specifications $V_{CC}$ = +5.0V ± 10%, Includes all Temperature Ranges

| SYMBOL | | PARAMETER | 82C54 | | 82C54-10 | | 82C54-12 | | UNITS | TEST CONDITIONS |
|---|---|---|---|---|---|---|---|---|---|---|
| | | | MIN | MAX | MIN | MAX | MIN | MAX | | |
| **READ CYCLE** | | | | | | | | | | |
| (1) | TAR | Address Stable Before $\overline{RD}$ | 30 | - | 25 | - | 25 | - | ns | 1 |
| (2) | TSR | $\overline{CS}$ Stable Before $\overline{RD}$ | 0 | - | 0 | - | 0 | - | ns | 1 |
| (3) | TRA | Address Hold Time After $\overline{RD}$ | 0 | - | 0 | - | 0 | - | ns | 1 |
| (4) | TRR | $\overline{RD}$ Pulse Width | 150 | - | 95 | - | 95 | - | ns | 1 |
| (5) | TRD | Data Delay from $\overline{RD}$ | - | 120 | - | 85 | - | 85 | ns | 1 |
| (6) | TAD | Data Delay from Address | - | 210 | - | 185 | - | 185 | ns | 1 |
| (7) | TDF | $\overline{RD}$ to Data Floating | 5 | 85 | 5 | 65 | 5 | 65 | ns | 2, Note 1 |
| (8) | TRV | Command Recovery Time | 200 | - | 165 | - | 165 | - | ns | |
| **WRITE CYCLE** | | | | | | | | | | |
| (9) | TAW | Address Stable Before $\overline{WR}$ | 0 | - | 0 | - | 0 | - | ns | |
| (10) | TSW | $\overline{CS}$ Stable Before $\overline{WR}$ | 0 | - | 0 | - | 0 | - | ns | |
| (11) | TWA | Address Hold Time After $\overline{WR}$ | 0 | - | 0 | - | 0 | - | ns | |
| (12) | TWW | $\overline{WR}$ Pulse Width | 95 | - | 95 | - | 95 | - | ns | |
| (13) | TDW | Data Setup Time Before $\overline{WR}$ | 140 | - | 95 | - | 95 | - | ns | |
| (14) | TWD | Data Hold Time After $\overline{WR}$ | 25 | - | 0 | - | 0 | - | ns | |
| (15) | TRV | Command Recovery Time | 200 | - | 165 | - | 165 | - | ns | |
| **CLOCK AND GATE** | | | | | | | | | | |
| (16) | TCLK | Clock Period | 125 | DC | 100 | DC | 80 | DC | ns | 1 |
| (17) | TPWH | High Pulse Width | 60 | - | 30 | - | 30 | - | ns | 1 |
| (18) | TPWL | Low Pulse Width | 60 | - | 40 | - | 30 | - | ns | 1 |
| (19) | TR | Clock Rise Time | - | 25 | - | 25 | - | 25 | ns | |
| (20) | TF | Clock Fall Time | - | 25 | - | 25 | - | 25 | ns | |
| (21) | TGW | Gate Width High | 50 | - | 50 | - | 50 | - | ns | 1 |
| (22) | TGL | Gate Width Low | 50 | - | 50 | - | 50 | - | ns | 1 |
| (23) | TGS | Gate Setup Time to CLK | 50 | - | 40 | - | 40 | - | ns | 1 |
| (24) | TGH | Gate Hold Time After CLK | 50 | - | 50 | - | 50 | - | ns | 1 |
| (25) | TOD | Output Delay from CLK | - | 150 | - | 100 | - | 100 | ns | 1 |
| (26) | TODG | Output Delay from Gate | - | 120 | - | 100 | - | 100 | ns | 1 |
| (27) | TWO | OUT Delay from Mode Write | - | 260 | - | 240 | - | 240 | ns | 1 |
| (28) | TWC | CLK Delay for Loading | 0 | 55 | 0 | 55 | 0 | 55 | ns | 1 |
| (29) | TWG | Gate Delay for Sampling | -5 | 40 | -5 | 40 | -5 | 40 | ns | 1 |
| (30) | TCL | CLK Setup for Count Latch | -40 | 40 | -40 | 40 | -40 | 40 | ns | 1 |

NOTE:

1. Not tested, but characterized at initial design and at major process/design changes.

## Functional Diagram

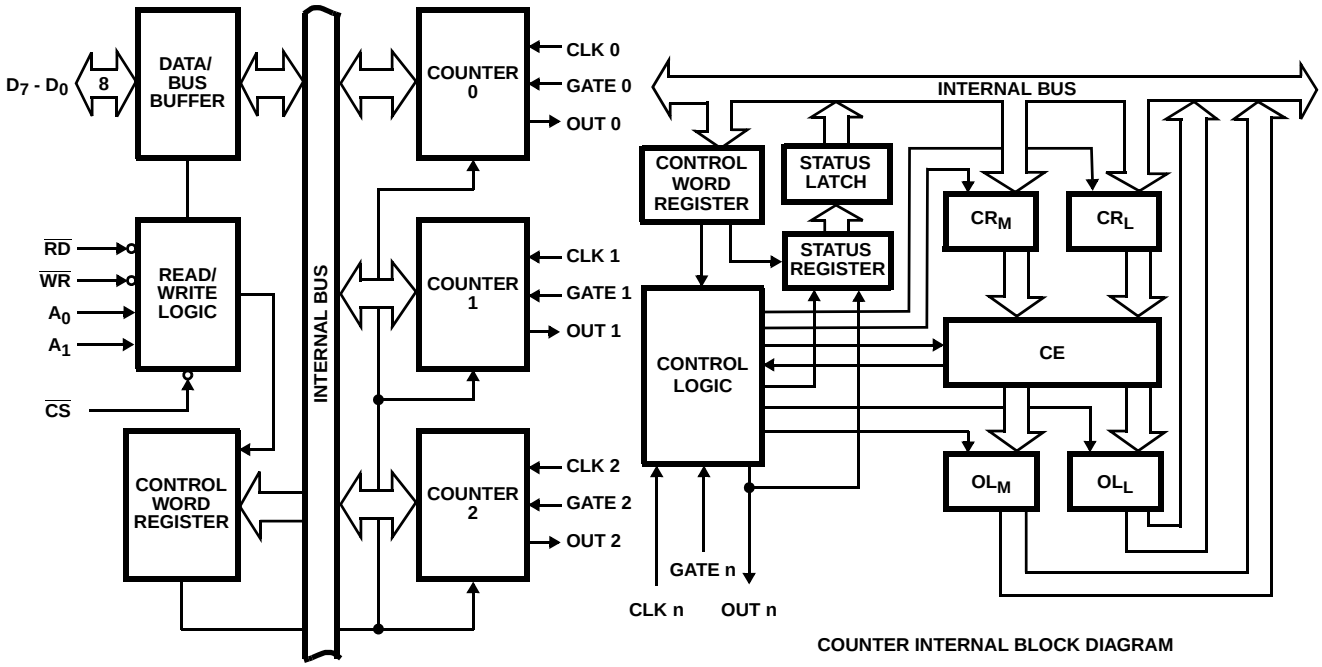


## Pin Description

| SYMBOL | DIP PIN NUMBER | TYPE | DEFINITION |
|---|---|---|---|
| D7 - D0 | 1 - 8 | I/O | DATA: Bi-directional three-state data bus lines, connected to system data bus. |
| CLK 0 | 9 | I | CLOCK 0: Clock input of Counter 0. |
| OUT 0 | 10 | O | OUT 0: Output of Counter 0. |
| GATE 0 | 11 | I | GATE 0: Gate input of Counter 0. |
| GND | 12 | | GROUND: Power supply connection. |
| OUT 1 | 13 | O | OUT 1: Output of Counter 1. |
| GATE 1 | 14 | I | GATE 1: Gate input of Counter 1. |
| CLK 1 | 15 | I | CLOCK 1: Clock input of Counter 1. |
| GATE 2 | 16 | I | GATE 2: Gate input of Counter 2. |
| OUT 2 | 17 | O | OUT 2: Output of Counter 2. |
| CLK 2 | 18 | I | CLOCK 2: Clock input of Counter 2. |
| A0, A1 | 19 - 20 | I | ADDRESS: Select inputs for one of the three counters or Control Word Register for read/write operations. Normally connected to the system address bus. |
| $\overline{CS}$ | 21 | I | CHIP SELECT: A low on this input enables the 82C54 to respond to $\overline{RD}$ and $\overline{WR}$ signals. $\overline{RD}$ and $\overline{WR}$ are ignored otherwise. |
| $\overline{RD}$ | 22 | I | READ: This input is low during CPU read operations. |
| $\overline{WR}$ | 23 | I | WRITE: This input is low during CPU write operations. |
| $V_{CC}$ | 24 | - | $V_{CC}$: The +5V power supply pin. A 0.1µF capacitor between pins VCC and GND is recommended for decoupling. |

| A1 | A0 | SELECTS |
|---|---|---|
| 0 | 0 | Counter 0 |
| 0 | 1 | Counter 1 |
| 1 | 0 | Counter 2 |
| 1 | 1 | Control Word Register |

## Functional Description

### General

The 82C54 is a programmable interval timer/counter designed for use with microcomputer systems. It is a general purpose, multi-timing element that can be treated as an array of I/O ports in the system software.

The 82C54 solves one of the most common problems in any microcomputer system, the generation of accurate time delays under software control. Instead of setting up timing loops in software, the programmer configures the 82C54 to match his requirements and programs one of the counters for the desired delay. After the desired delay, the 82C54 will interrupt the CPU. Software overhead is minimal and variable length delays can easily be accommodated.

Some of the other computer/timer functions common to microcomputers which can be implemented with the 82C54 are:

- Real time clock
- Event counter
- Digital one-shot
- Programmable rate generator
- Square wave generator
- Binary rate multiplier
- Complex waveform generator
- Complex motor controller

### Data Bus Buffer

This three-state, bi-directional, 8-bit buffer is used to interface the 82C54 to the system bus (see Figure 1).

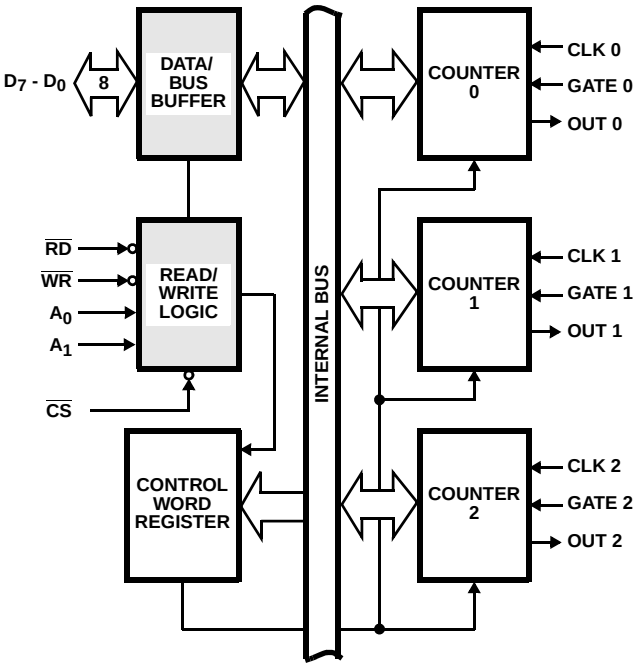


FIGURE 1. DATA BUS BUFFER AND READ/WRITE LOGIC FUNCTIONS

### Read/Write Logic

The Read/Write Logic accepts inputs from the system bus and generates control signals for the other functional blocks of the 82C54. A1 and A0 select one of the three counters or the Control Word Register to be read from/written into. A “low” on the $\overline{RD}$ input tells the 82C54 that the CPU is reading one of the counters. A “low” on the $\overline{WR}$ input tells the 82C54 that the CPU is writing either a Control Word or an initial count. Both $\overline{RD}$ and $\overline{WR}$ are qualified by $\overline{CS}$; $\overline{RD}$ and $\overline{WR}$ are ignored unless the 82C54 has been selected by holding $\overline{CS}$ low.

### Control Word Register

The Control Word Register (Figure 2) is selected by the Read/Write Logic when A1, A0 = 11. If the CPU then does a write operation to the 82C54, the data is stored in the Control Word Register and is interpreted as a Control Word used to define the Counter operation.

The Control Word Register can only be written to; status information is available with the Read-Back Command.

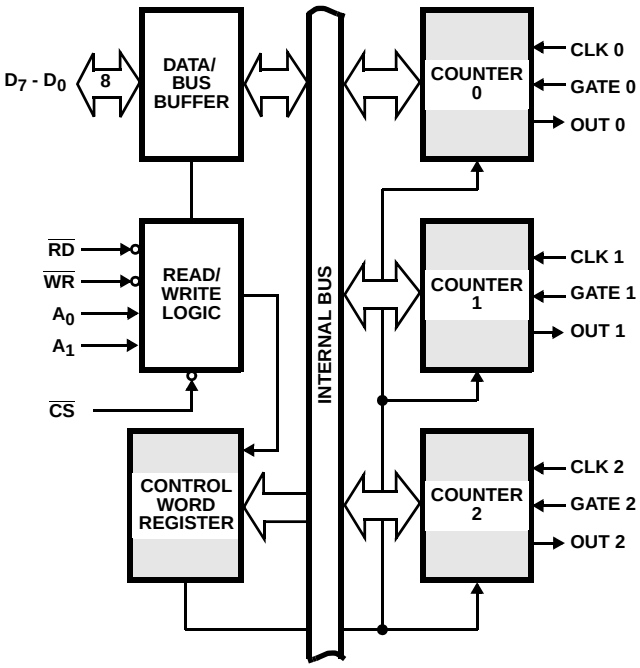


FIGURE 2. CONTROL WORD REGISTER AND COUNTER FUNCTIONS

### Counter 0, Counter 1, Counter 2

These three functional blocks are identical in operation, so only a single Counter will be described. The internal block diagram of a signal counter is shown in Figure 3. The counters are fully independent. Each Counter may operate in a different Mode.

The Control Word Register is shown in the figure; it is not part of the Counter itself, but its contents determine how the Counter operates.

The status register, shown in the figure, when latched, contains the current contents of the Control Word Register and status of the output and null count flag. (See detailed explanation of the Read-Back command.)

The actual counter is labeled CE (for Counting Element). It is a 16-bit presettable synchronous down counter.

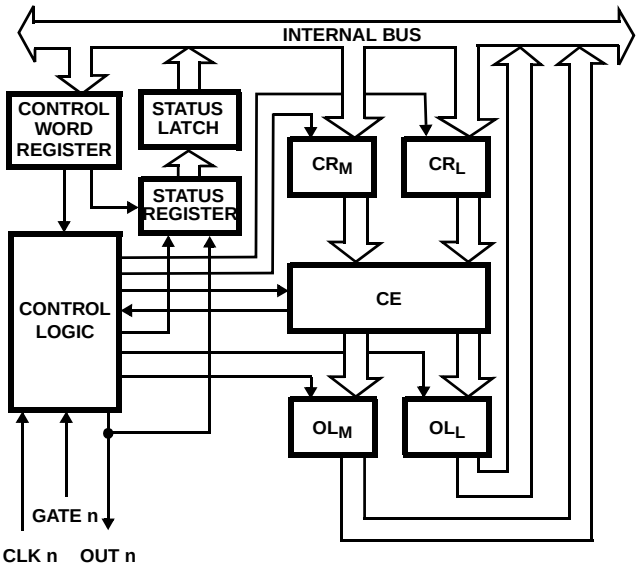


**FIGURE 3. COUNTER INTERNAL BLOCK DIAGRAM**

OLM and OLL are two 8-bit latches. OL stands for “Output Latch”; the subscripts M and L for “Most significant byte” and “Least significant byte”, respectively. Both are normally referred to as one unit and called just OL. These latches normally “follow” the CE, but if a suitable Counter Latch Command is sent to the 82C54, the latches “latch” the present count until read by the CPU and then return to “following” the CE. One latch at a time is enabled by the counter’s Control Logic to drive the internal bus. This is how the 16-bit Counter communicates over the 8-bit internal bus. Note that the CE itself cannot be read; whenever you read the count, it is the OL that is being read.

Similarly, there are two 8-bit registers called CRM and CRL (for “Count Register”). Both are normally referred to as one unit and called just CR. When a new count is written to the Counter, the count is stored in the CR and later transferred to the CE. The Control Logic allows one register at a time to be loaded from the internal bus. Both bytes are transferred to the CE simultaneously. CRM and CRL are cleared when the Counter is programmed for one byte counts (either most significant byte only or least significant byte only) the other byte will be zero. Note that the CE cannot be written into; whenever a count is written, it is written into the CR.

The Control Logic is also shown in the diagram. CLK n, GATE n, and OUT n are all connected to the outside world through the Control Logic.

### *82C54 System Interface*

The 82C54 is treated by the system software as an array of peripheral I/O ports; three are counters and the fourth is a control register for MODE programming.

Basically, the select inputs A0, A1 connect to the A0, A1 address bus signals of the CPU. The $\overline{CS}$ can be derived directly from the address bus using a linear select method or it can be connected to the output of a decoder.

## *Operational Description*

### *General*

After power-up, the state of the 82C54 is undefined. The Mode, count value, and output of all Counters are undefined.

How each Counter operates is determined when it is programmed. Each Counter must be programmed before it can be used. Unused counters need not be programmed.

### *Programming the 82C54*

Counters are programmed by writing a Control Word and then an initial count.

All Control Words are written into the Control Word Register, which is selected when A1, A0 = 11. The Control Word specifies which Counter is being programmed.

By contrast, initial counts are written into the Counters, not the Control Word Register. The A1, A0 inputs are used to select the Counter to be written into. The format of the initial count is determined by the Control Word used.

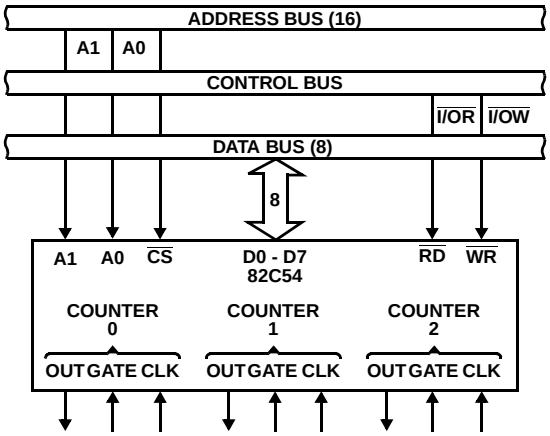


**FIGURE 4. COUNTER INTERNAL BLOCK DIAGRAM**

### *Write Operations*

The programming procedure for the 82C54 is very flexible. Only two conventions need to be remembered:

1. For Each Counter, the Control Word must be written before the initial count is written.
2. The initial count must follow the count format specified in the Control Word (least significant byte only, most significant byte only, or least significant byte and then most significant byte).

Since the Control Word Register and the three Counters have separate addresses (selected by the A1, A0 inputs), and each Control Word specifies the Counter it applies to (SC0, SC1 bits), no special instruction sequence is required. Any programming sequence that follows the conventions above is acceptable.

## CONTROL WORD FORMAT

A1, A0 = 11; $\overline{CS}$ = 0; $\overline{RD}$ = 1; $\overline{WR}$ = 0

| D7 | D6 | D5 | D4 | D3 | D2 | D1 | D0 |
|---|---|---|---|---|---|---|---|
| SC1 | SC0 | RW1 | RW0 | M2 | M1 | M0 | BCD |

**SC - SELECT COUNTER**

| SC1 | SC0 | |
|---|---|---|
| 0 | 0 | Select Counter 0 |
| 0 | 1 | Select Counter 1 |
| 1 | 0 | Select Counter 2 |
| 1 | 1 | Read-Back Command (See Read Operations) |

**RW - READ/WRITE**

| RW1 | RW0 | |
|---|---|---|
| 0 | 0 | Counter Latch Command (See Read Operations) |
| 0 | 1 | Read/Write least significant byte only. |
| 1 | 0 | Read/Write most significant byte only. |
| 1 | 1 | Read/Write least significant byte first, then most significant byte. |

**M - MODE**

| M2 | M1 | M0 | |
|---|---|---|---|
| 0 | 0 | 0 | Mode 0 |
| 0 | 0 | 1 | Mode 1 |
| X | 1 | 0 | Mode 2 |
| X | 1 | 1 | Mode 3 |
| 1 | 0 | 0 | Mode 4 |
| 1 | 0 | 1 | Mode 5 |

**BCD - BINARY CODED DECIMAL**

| | |
|---|---|
| 0 | Binary Counter 16-bit |
| 1 | Binary Coded Decimal (BCD) Counter (4 Decades) |

NOTE: Don't Care bits (X) should be 0 to insure compatibility with future products.

**POSSIBLE PROGRAMMING SEQUENCE**

| | A1 | A0 |
|---|---|---|
| Control Word - Counter 0 | 1 | 1 |
| LSB of Count - Counter 0 | 0 | 0 |
| MSB of Count - Counter 0 | 0 | 0 |
| Control Word - Counter 1 | 1 | 1 |
| LSB of Count - Counter 1 | 0 | 1 |
| MSB of Count - Counter 1 | 0 | 1 |
| Control Word - Counter 2 | 1 | 1 |
| LSB of Count - Counter 2 | 1 | 0 |
| MSB of Count - Counter 2 | 1 | 0 |

**POSSIBLE PROGRAMMING SEQUENCE**

| | A1 | A0 |
|---|---|---|
| Control Word - Counter 0 | 1 | 1 |
| Control Word - Counter 1 | 1 | 1 |
| Control Word - Counter 2 | 1 | 1 |
| LSB of Count - Counter 2 | 1 | 0 |
| LSB of Count - Counter 1 | 0 | 1 |
| LSB of Count - Counter 0 | 0 | 0 |
| MSB of Count - Counter 0 | 0 | 0 |
| MSB of Count - Counter 1 | 0 | 1 |
| MSB of Count - Counter 2 | 1 | 0 |

**POSSIBLE PROGRAMMING SEQUENCE**

| | A1 | A0 |
|---|---|---|
| Control Word - Counter 2 | 1 | 1 |
| Control Word - Counter 1 | 1 | 1 |
| Control Word - Counter 0 | 1 | 1 |
| LSB of Count - Counter 2 | 1 | 0 |
| MSB of Count - Counter 2 | 1 | 0 |
| LSB of Count - Counter 1 | 0 | 1 |
| MSB of Count - Counter 1 | 0 | 1 |
| LSB of Count - Counter 0 | 0 | 0 |
| MSB of Count - Counter 0 | 0 | 0 |

**POSSIBLE PROGRAMMING SEQUENCE**

| | A1 | A0 |
|---|---|---|
| Control Word - Counter 1 | 1 | 1 |
| Control Word - Counter 0 | 1 | 1 |
| LSB of Count - Counter 1 | 0 | 1 |
| Control Word - Counter 2 | 1 | 1 |
| LSB of Count - Counter 0 | 0 | 0 |
| MSB of Count - Counter 1 | 0 | 1 |
| LSB of Count - Counter 2 | 1 | 0 |
| MSB of Count - Counter 0 | 0 | 0 |
| MSB of Count - Counter 2 | 1 | 0 |

NOTE: In all four examples, all counters are programmed to Read/Write two-byte counts. These are only four of many programming sequences.

A new initial count may be written to a Counter at any time without affecting the Counter's programmed Mode in any way. Counting will be affected as described in the Mode definitions. The new count must follow the programmed count format.

If a Counter is programmed to read/write two-byte counts, the following precaution applies. A program must not transfer control between writing the first and second byte to another routine which also writes into that same Counter. Otherwise, the Counter will be loaded with an incorrect count.

## READ OPERATIONS

It is often desirable to read the value of a Counter without disturbing the count in progress. This is easily done in the 82C54.

There are three possible methods for reading the Counters. The first is through the Read-Back command, which is explained later. The second is a simple read operation of the Counter, which is selected with the A1, A0 inputs. The only requirement is that the CLK input of the selected Counter must be inhibited by using either the GATE input or external logic. Otherwise, the count may be in process of changing when it is read, giving an undefined result.

## COUNTER LATCH COMMAND

The other method for reading the Counters involves a special software command called the "Counter Latch Command". Like a Control Word, this command is written to the Control Word Register, which is selected when A1, A0 = 11. Also, like a Control Word, the SC0, SC1 bits select one of the three Counters, but two other bits, D5 and D4, distinguish this command from a Control Word.

A1, A0 = 11; $\overline{CS}$ = 0; $\overline{RD}$ = 1; $\overline{WR}$ = 0

| D7 | D6 | D5 | D4 | D3 | D2 | D1 | D0 |
|---|---|---|---|---|---|---|---|
| SC1 | SC0 | 0 | 0 | X | X | X | X |

SC1, SC0 - specify counter to be latched

| SC1 | SC0 | COUNTER |
|---|---|---|
| 0 | 0 | 0 |
| 0 | 1 | 1 |
| 1 | 0 | 2 |
| 1 | 1 | Read-Back Command |

D5, D4 - 00 designates Counter Latch Command, X - Don't Care.
NOTE: Don't Care bits (X) should be 0 to insure compatibility with future products.

The selected Counter's output latch (OL) latches the count when the Counter Latch Command is received. This count is held in the latch until it is read by the CPU (or until the Counter is reprogrammed). The count is then unlatched automatically and the OL returns to "following" the counting element (CE). This allows reading the contents of the Counters "on the fly" without affecting counting in progress. Multiple Counter Latch Commands may be used to latch more than one Counter. Each latched Counter's OL holds its count until read. Counter Latch Commands do not affect the programmed Mode of the Counter in any way.

If a Counter is latched and then, some time later, latched again before the count is read, the second Counter Latch Command is ignored. The count read will be the count at the time the first Counter Latch Command was issued.

With either method, the count must be read according to the programmed format; specifically, if the Counter is programmed for two byte counts, two bytes must be read. The two bytes do not have to be read one right after the other; read or write or programming operations of other Counters may be inserted between them.

Another feature of the 82C54 is that reads and writes of the same Counter may be interleaved; for example, if the Counter is programmed for two byte counts, the following sequence is valid.

1. Read least significant byte.
2. Write new least significant byte.
3. Read most significant byte.
4. Write new most significant byte.

If a counter is programmed to read or write two-byte counts, the following precaution applies: A program MUST NOT transfer control between reading the first and second byte to another routine which also reads from that same Counter. Otherwise, an incorrect count will be read.

## READ-BACK COMMAND

The read-back command allows the user to check the count value, programmed Mode, and current state of the OUT pin and Null Count flag of the selected counter(s).

The command is written into the Control Word Register and has the format shown in Figure 5. The command applies to

the counters selected by setting their corresponding bits D3, D2, D1 = 1.

A0, A1 = 11; $\overline{CS}$ = 0; $\overline{RD}$ = 1; $\overline{WR}$ = 0

| D7 | D6 | D5 | D4 | D3 | D2 | D1 | D0 |
|---|---|---|---|---|---|---|---|
| 1 | 1 | $\overline{COUNT}$ | $\overline{STATUS}$ | CNT 2 | CNT 1 | CNT 0 | 0 |

D5:0=Latch count of selected Counter (s)
D4:0=Latch status of selected Counter(s)
D3:1=Select Counter 2
D2:1=Select Counter 1
D1:1=Select Counter 0
D0:Reserved for future expansion; Must be 0

**FIGURE 5. READ-BACK COMMAND FORMAT**

The read-back command may be used to latch multiple counter output latches (OL) by setting the COUNT bit D5 = 0 and selecting the desired counter(s). This signal command is functionally equivalent to several counter latch commands, one for each counter latched. Each counter's latched count is held until it is read (or the counter is reprogrammed). That counter is automatically unlatched when read, but other counters remain latched until they are read. If multiple count read-back commands are issued to the same counter without reading the count, all but the first are ignored; i.e., the count which will be read is the count at the time the first read-back command was issued.

The read-back command may also be used to latch status information of selected counter(s) by setting STATUS bit D4 = 0. Status must be latched to be read; status of a counter is accessed by a read from that counter.

The counter status format is shown in Figure 6. Bits D5 through D0 contain the counter's programmed Mode exactly as written in the last Mode Control Word. OUTPUT bit D7 contains the current state of the OUT pin. This allows the user to monitor the counter's output via software, possibly eliminating some hardware from a system.

| D7 | D6 | D5 | D4 | D3 | D2 | D1 | D0 |
|---|---|---|---|---|---|---|---|
| OUTPUT | NULL COUNT | RW1 | RW0 | M2 | M1 | M0 | BCD |

D7:1=Out pin is 1
0=Out pin is 0
D6:1=Null count
0=Count available for reading
D5-D0=Counter programmed mode (See Control Word Formats)

**FIGURE 6. STATUS BYTE**

NULL COUNT bit D6 indicates when the last count written to the counter register (CR) has been loaded into the counting element (CE). The exact time this happens depends on the Mode of the counter and is described in the Mode Definitions, but until the counter is loaded into the counting element (CE), it can't be read from the counter. If the count is latched or read before this time, the count value will not reflect the new count just written. The operation of Null Count is shown below.

| THIS ACTION: | CAUSES: |
|---|---|
| A. Write to the control word register:(1) . . . . | Null Count = 1 |
| B. Write to the count register (CR):(2) . . . . . | Null Count = 1 |
| C. New count is loaded into CE (CR - CE) . . | Null Count = 0 |

1. Only the counter specified by the control word will have its null count set to 1. Null count bits of other counters are unaffected.
2. If the counter is programmed for two-byte counts (least significant byte then most significant byte) null count goes to 1 when the second byte is written.

If multiple status latch operations of the counter(s) are performed without reading the status, all but the first are ignored; i.e., the status that will be read is the status of the counter at the time the first status read-back command was issued.

Both count and status of the selected counter(s) may be latched simultaneously by setting both COUNT and STATUS bits D5, D4 = 0. This is functionally the same as issuing two separate read-back commands at once, and the above discussions apply here also. Specifically, if multiple count and/or status read-back commands are issued to the same counter(s) without any intervening reads, all but the first are ignored. This is illustrated in Figure 7.

If both count and status of a counter are latched, the first read operation of that counter will return latched status, regardless of which was latched first. The next one or two reads (depending on whether the counter is programmed for one or two type counts) return latched count. Subsequent reads return unlatched count.

| COMMANDS | | | | | | | | DESCRIPTION | RESULT |
|---|---|---|---|---|---|---|---|---|---|
| D7 | D6 | D5 | D4 | D3 | D2 | D1 | D0 | | |
| 1 | 1 | 0 | 0 | 0 | 0 | 1 | 0 | Read-Back Count and Status of Counter 0 | Count and Status Latched for Counter 0 |
| 1 | 1 | 1 | 0 | 0 | 1 | 0 | 0 | Read-Back Status of Counter 1 | Status Latched for Counter 1 |
| 1 | 1 | 1 | 0 | 1 | 1 | 0 | 0 | Read-Back Status of Counters 2, 1 | Status Latched for Counter 2, But Not Counter 1 |
| 1 | 1 | 0 | 1 | 1 | 0 | 0 | 0 | Read-Back Count of Counter 2 | Count Latched for Counter 2 |
| 1 | 1 | 0 | 0 | 0 | 1 | 0 | 0 | Read-Back Count and Status of Counter 1 | Count Latched for Counter 1, But Not Status |
| 1 | 1 | 1 | 0 | 0 | 0 | 1 | 0 | Read-Back Status of Counter 1 | Command Ignored, Status Already Latched for Counter 1 |

**FIGURE 7. READ-BACK COMMAND EXAMPLE**

| $\overline{CS}$ | $\overline{RD}$ | $\overline{WR}$ | A1 | A0 | |
|---|---|---|---|---|---|
| 0 | 1 | 0 | 0 | 0 | Write into Counter 0 |
| 0 | 1 | 0 | 0 | 1 | Write into Counter 1 |
| 0 | 1 | 0 | 1 | 0 | Write into Counter 2 |
| 0 | 1 | 0 | 1 | 1 | Write Control Word |
| 0 | 0 | 1 | 0 | 0 | Read from Counter 0 |
| 0 | 0 | 1 | 0 | 1 | Read from Counter 1 |
| 0 | 0 | 1 | 1 | 0 | Read from Counter 2 |
| 0 | 0 | 1 | 1 | 1 | No-Operation (Three-State) |
| 1 | X | X | X | X | No-Operation (Three-State) |
| 0 | 1 | 1 | X | X | No-Operation (Three-State) |

**FIGURE 8. READ/WRITE OPERATIONS SUMMARY**

## MODE DEFINITIONS

The following are defined for use in describing the operation of the 82C54.

**CLK PULSE -** A rising edge, then a falling edge, in that order, of a Counter's CLK input.

**TRIGGER -** A rising edge of a Counter's Gate input.

**COUNTER LOADING -** The transfer of a count from the CR to the CE (See "Functional Description")

## MODE 0: INTERRUPT ON TERMINAL COUNT

Mode 0 is typically used for event counting. After the Control Word is written, OUT is initially low, and will remain low until the Counter reaches zero. OUT then goes high and remains high until a new count or a new Mode 0 Control Word is written to the Counter.

GATE = 1 enables counting; GATE = 0 disables counting. GATE has no effect on OUT.

After the Control Word and initial count are written to a Counter, the initial count will be loaded on the next CLK pulse. This CLK pulse does not decrement the count, so for an initial count of N, OUT does not go high until N + 1 CLK pulses after the initial count is written.

If a new count is written to the Counter it will be loaded on the next CLK pulse and counting will continue from the new count. If a two-byte count is written, the following happens:

1. Writing the first byte disables counting. Out is set low immediately (no clock pulse required).
2. Writing the second byte allows the new count to be loaded on the next CLK pulse.

This allows the counting sequence to be synchronized by software. Again OUT does not go high until N + 1 CLK pulses after the new count of N is written.

If an initial count is written while GATE = 0, it will still be loaded on the next CLK pulse. When GATE goes high, OUT will go high N CLK pulses later; no CLK pulse is needed to load the counter as this has already been done.

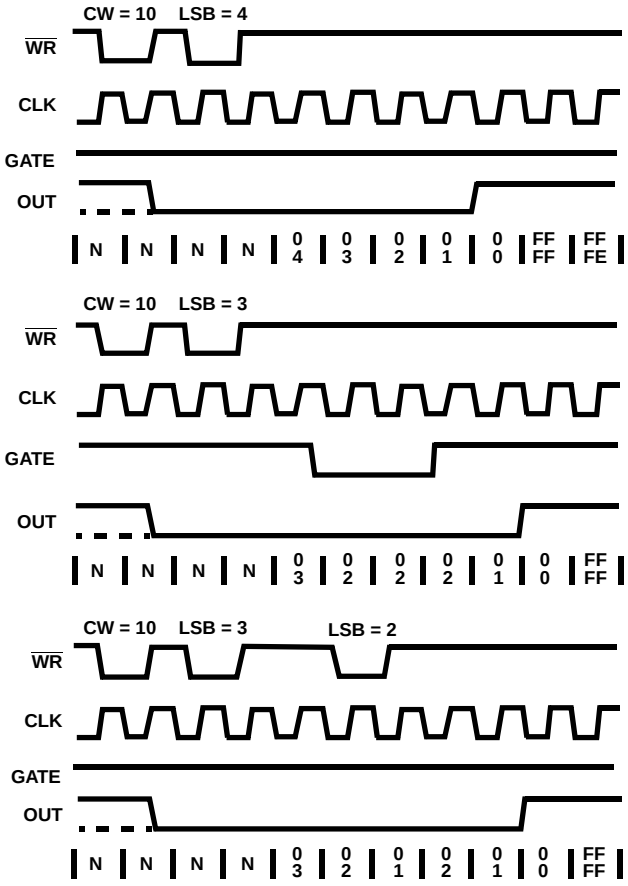


**FIGURE 9. MODE 0**

NOTES: The following conventions apply to all mode timing diagrams.

1. Counters are programmed for binary (not BCD) counting and for reading/writing least significant byte (LSB) only.
2. The counter is always selected ($\overline{CS}$ always low).
3. CW stands for “Control Word”; CW = 10 means a control word of 10, Hex is written to the counter.
4. LSB stands for Least significant “byte” of count.
5. Numbers below diagrams are count values. The lower number is the least significant byte. The upper number is the most significant byte. Since the counter is programmed to read/write LSB only, the most significant byte cannot be read.
6. N stands for an undefined count.
7. Vertical lines show transitions between count values.

## MODE 1: HARDWARE RETRIGGERABLE ONE-SHOT

OUT will be initially high. OUT will go low on the CLK pulse following a trigger to begin the one-shot pulse, and will remain low until the Counter reaches zero. OUT will then go high and remain high until the CLK pulse after the next trigger.

After writing the Control Word and initial count, the Counter is armed. A trigger results in loading the Counter and setting OUT low on the next CLK pulse, thus starting the one-shot pulse N CLK cycles in duration. The one-shot is retriggerable, hence OUT will remain low for N CLK pulses after any trigger. The one-shot pulse can be repeated without rewriting the same count into the counter. GATE has no effect on OUT.

If a new count is written to the Counter during a one-shot pulse, the current one-shot is not affected unless the Counter is retriggerable. In that case, the Counter is loaded with the new count and the one-shot pulse continues until the new count expires.

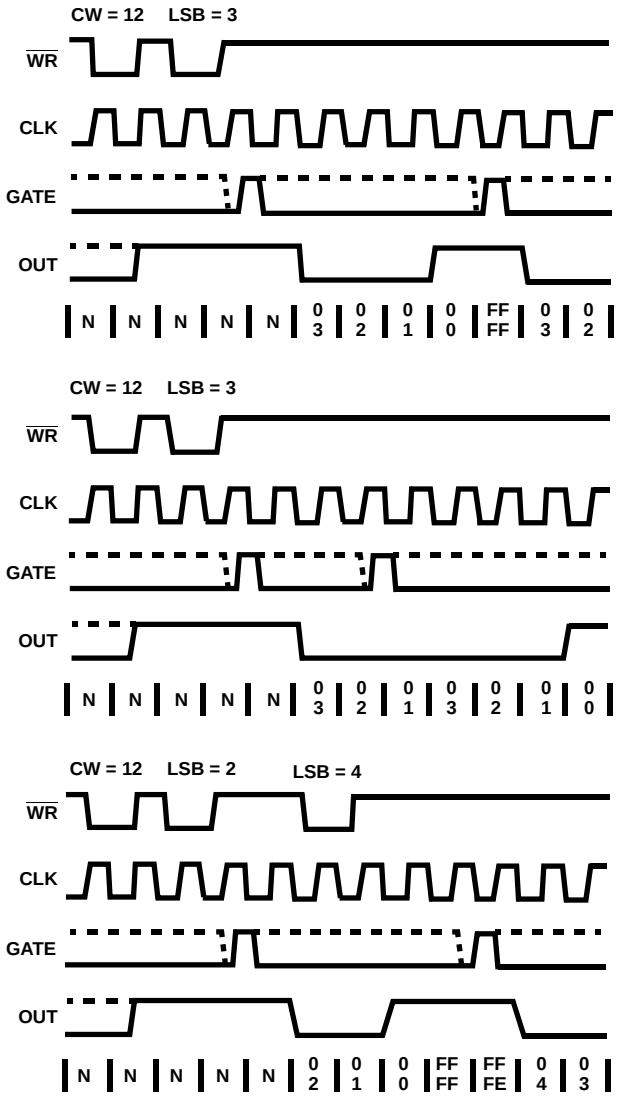


**FIGURE 10. MODE 1**

## MODE 2: RATE GENERATOR

This Mode functions like a divide-by-N counter. It is typically used to generate a Real Time Clock Interrupt. OUT will initially be high. When the initial count has decremented to 1, OUT goes low for one CLK pulse. OUT then goes high again, the Counter reloads the initial count and the process is repeated. Mode 2 is periodic; the same sequence is repeated indefinitely. For an initial count of N, the sequence repeats every N CLK cycles.

GATE = 1 enables counting; GATE = 0 disables counting. If GATE goes low during an output pulse, OUT is set high immediately. A trigger reloads the Counter with the initial count on the next CLK pulse; OUT goes low N CLK pulses after the trigger. Thus the GATE input can be used to synchronize the Counter.

After writing a Control Word and initial count, the Counter will be loaded on the next CLK pulse. OUT goes low N CLK pulses after the initial count is written. This allows the Counter to be synchronized by software also.

Writing a new count while counting does not affect the current counting sequence. If a trigger is received after writing a new count but before the end of the current period, the Counter will be loaded with the new count on the next CLK pulse and counting will continue from the end of the current counting cycle.

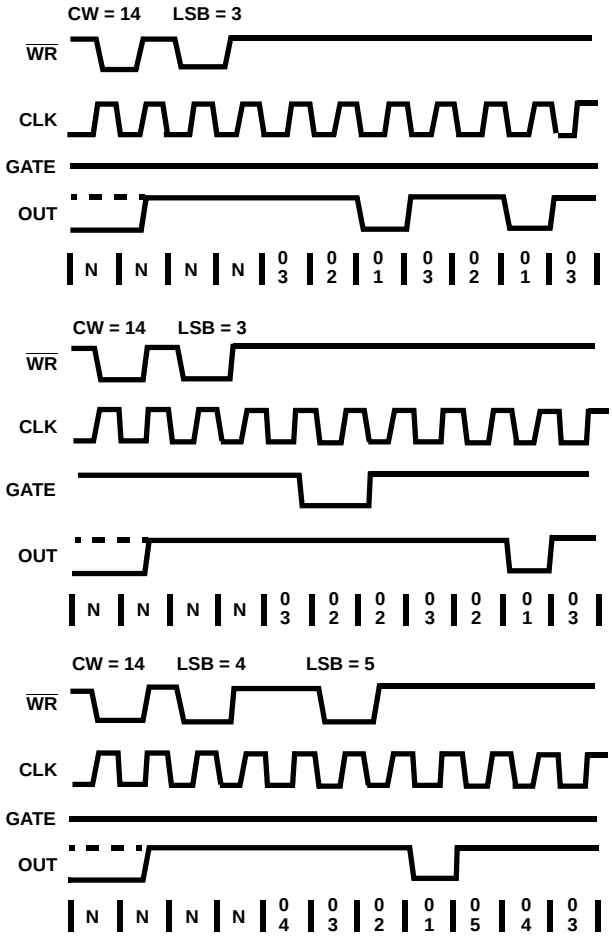


FIGURE 11. MODE 2

## MODE 3: SQUARE WAVE MODE

Mode 3 is typically used for Baud rate generation. Mode 3 is similar to Mode 2 except for the duty cycle of OUT. OUT will initially be high. When half the initial count has expired, OUT goes low for the remainder of the count. Mode 3 is periodic; the sequence above is repeated indefinitely. An initial count of N results in a square wave with a period of N CLK cycles.

GATE = 1 enables counting; GATE = 0 disables counting. If GATE goes low while OUT is low, OUT is set high immediately; no CLK pulse is required. A trigger reloads the Counter with the initial count on the next CLK pulse. Thus the GATE input can be used to synchronize the Counter.

After writing a Control Word and initial count, the Counter will be loaded on the next CLK pulse. This allows the Counter to be synchronized by software also.

Writing a new count while counting does not affect the current counting sequence. If a trigger is received after writing a new count but before the end of the current half-cycle of the square wave, the Counter will be loaded with the new count on the next CLK pulse and counting will continue from the new count. Otherwise, the new count will be loaded at the end of the current half-cycle.

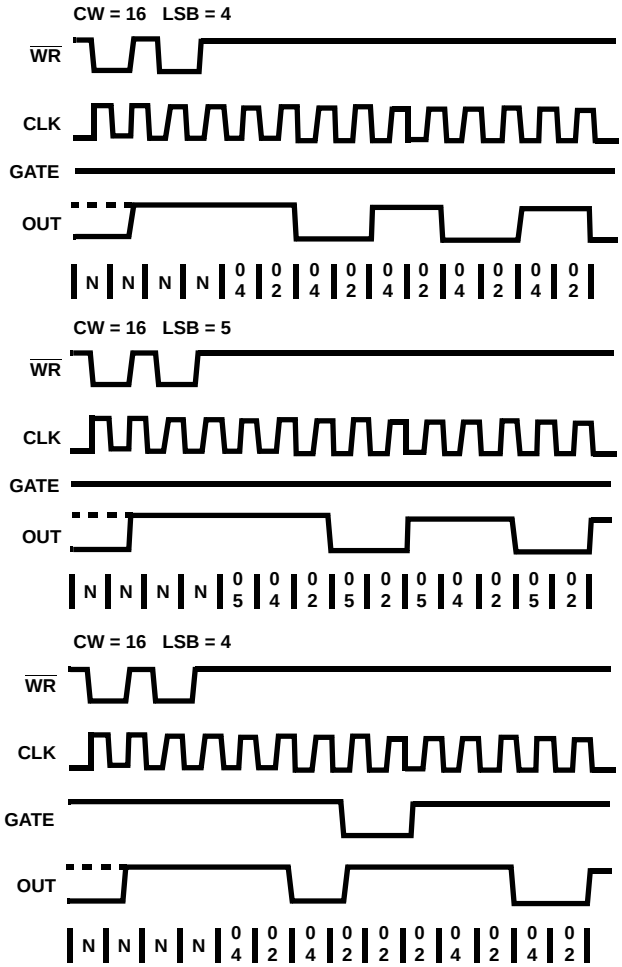


FIGURE 12. MODE 3

### Mode 3 Is Implemented As Follows

**EVEN COUNTS -** OUT is initially high. The initial count is loaded on one CLK pulse and then is decremented by two on succeeding CLK pulses. When the count expires, OUT changes value and the Counter is reloaded with the initial count. The above process is repeated indefinitely.

**ODD COUNTS -** OUT is initially high. The initial count is loaded on one CLK pulse, decremented by one on the next CLK pulse, and then decremented by two on succeeding CLK pulses. When the count expires, OUT goes low and the Counter is reloaded with the initial count. The count is decremented by three on the next CLK pulse, and then by two on succeeding CLK pulses. When the count expires, OUT goes high again and the Counter is reloaded with the initial count. The above process is repeated indefinitely. So for odd counts, OUT will be high for (N + 1)/2 counts and low for (N - 1)/2 counts.

### MODE 4: SOFTWARE TRIGGERED MODE

OUT will be initially high. When the initial count expires, OUT will go low for one CLK pulse then go high again. The counting sequence is “Triggered” by writing the initial count.

GATE = 1 enables counting; GATE = 0 disables counting. GATE has no effect on OUT.

After writing a Control Word and initial count, the Counter will be loaded on the next CLK pulse. This CLK pulse does not decrement the count, so for an initial count of N, OUT does not strobe low until N + 1 CLK pulses after the initial count is written.

If a new count is written during counting, it will be loaded on the next CLK pulse and counting will continue from the new count. If a two-byte count is written, the following happens:

1. Writing the first byte has no effect on counting.
2. Writing the second byte allows the new count to be loaded on the next CLK pulse.

This allows the sequence to be “retriggered” by software. OUT strobes low N + 1 CLK pulses after the new count of N is written.

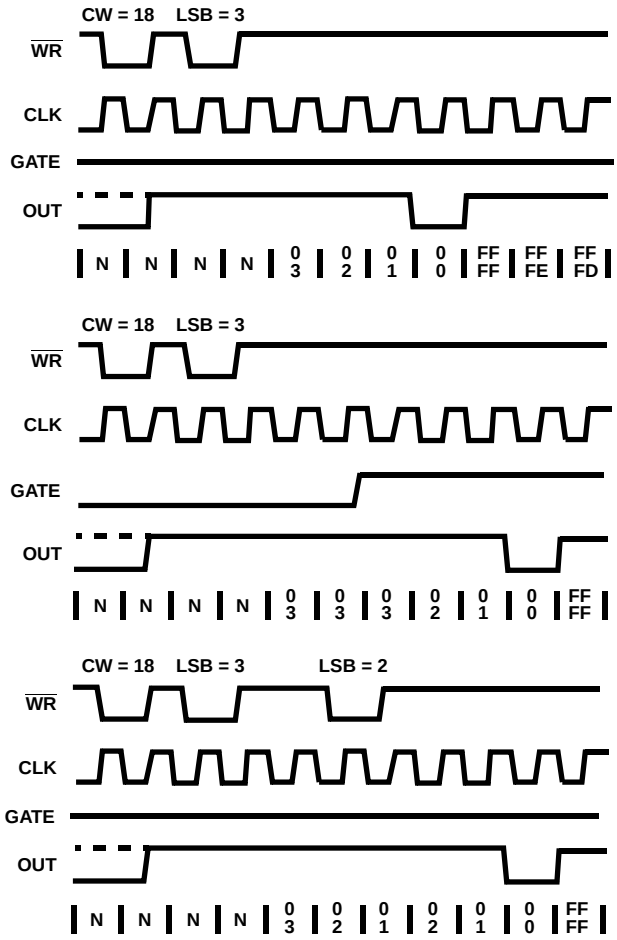


**FIGURE 13. MODE 4**

### MODE 5: HARDWARE TRIGGERED STROBE (RETRIGGERABLE)

OUT will initially be high. Counting is triggered by a rising edge of GATE. When the initial count has expired, OUT will go low for one CLK pulse and then go high again.

After writing the Control Word and initial count, the counter will not be loaded until the CLK pulse after a trigger. This CLK pulse does not decrement the count, so for an initial count of N, OUT does not strobe low until N + 1 CLK pulses after trigger.

A trigger results in the Counter being loaded with the initial count on the next CLK pulse. The counting sequence is triggerable. OUT will not strobe low for N + 1 CLK pulses after any trigger GATE has no effect on OUT.

If a new count is written during counting, the current counting sequence will not be affected. If a trigger occurs after the new count is written but before the current count expires, the

Counter will be loaded with new count on the next CLK pulse and counting will continue from there.

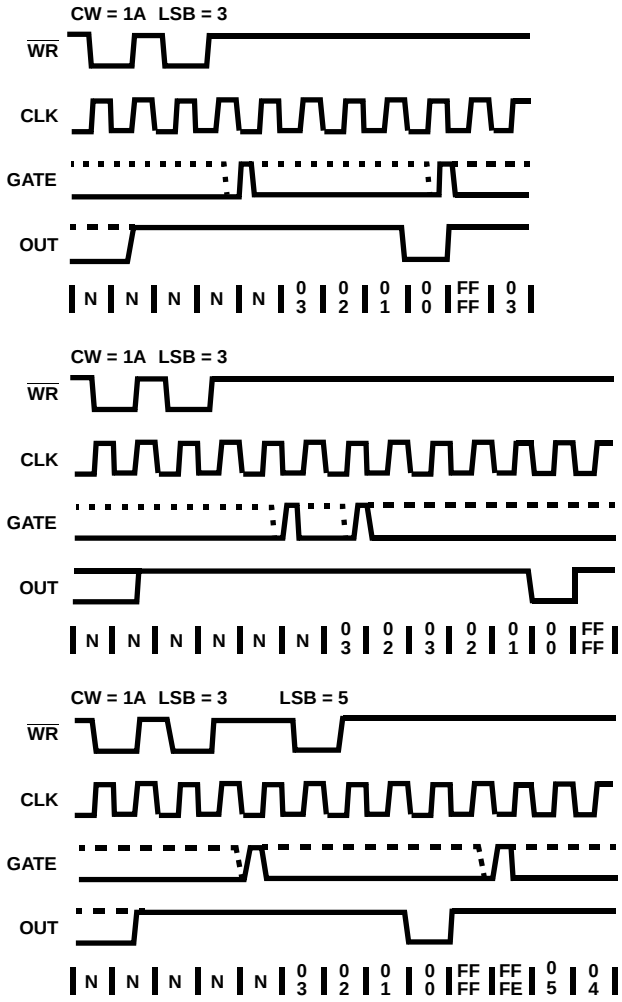


FIGURE 14. MODE 5

## Operation Common To All Modes

### Programming

When a Control Word is written to a Counter, all Control Logic, is immediately reset and OUT goes to a known initial state; no CLK pulses are required for this.

### Gate

The GATE input is always sampled on the rising edge of CLK. In Modes 0, 2, 3 and 4 the GATE input is level sensitive, and logic level is sampled on the rising edge of CLK. In modes 1, 2, 3 and 5 the GATE input is rising-edge sensitive. In these Modes, a rising edge of Gate (trigger) sets an edge-sensitive flip-flop in the Counter. This flip-flop is then sampled on the next rising edge of CLK. The flip-flop is reset immediately after it is sampled. In this way, a trigger will be detected no matter when it occurs - a high logic level does not have to be maintained until the next rising edge of CLK. Note that in Modes 2 and 3, the GATE input is both edge-and level-sensitive.

### Counter

New counts are loaded and Counters are decremented on the falling edge of CLK.

The largest possible initial count is 0; this is equivalent to $2^{16}$ for binary counting and $10^4$ for BCD counting.

The counter does not stop when it reaches zero. In Modes 0, 1, 4, and 5 the Counter “wraps around” to the highest count, either FFFF hex for binary counting or 9999 for BCD counting, and continues counting. Modes 2 and 3 are periodic; the Counter reloads itself with the initial count and continues counting from there.

| SIGNAL STATUS MODES | LOW OR GOING LOW | RISING | HIGH |
|---|---|---|---|
| 0 | Disables Counting | - | Enables Counting |
| 1 | - | 1) Initiates Counting<br>2) Resets output after next clock | - |
| 2 | 1) Disables counting<br>2) Sets output immediately high | Initiates Counting | Enables Counting |
| 3 | 1) Disables counting<br>2) Sets output immediately high | Initiates Counting | Enables Counting |
| 4 | 1) Disables Counting | - | Enables Counting |
| 5 | - | Initiates Counting | - |

FIGURE 15. GATE PIN OPERATIONS SUMMARY

| MODE | MIN COUNT | MAX COUNT |
|---|---|---|
| 0 | 1 | 0 |
| 1 | 1 | 0 |
| 2 | 2 | 0 |
| 3 | 2 | 0 |
| 4 | 1 | 0 |
| 5 | 1 | 0 |

NOTE: 0 is equivalent to $2^{16}$ for binary counting and $10^4$ for BCD counting.

FIGURE 16. MINIMUM AND MAXIMUM INITIAL COUNTS

## Timing Waveforms

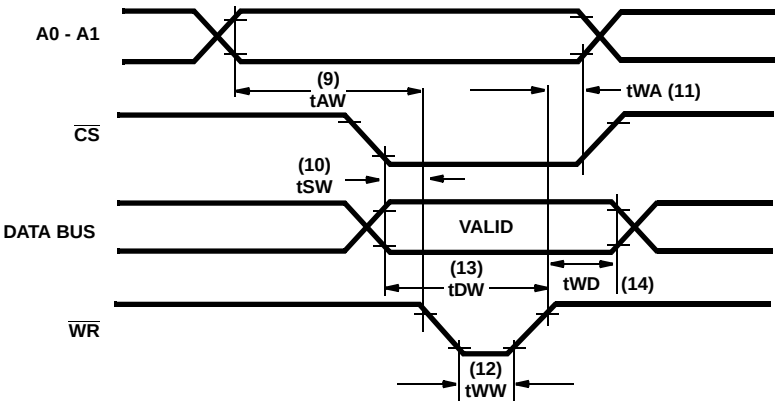


FIGURE 17. WRITE

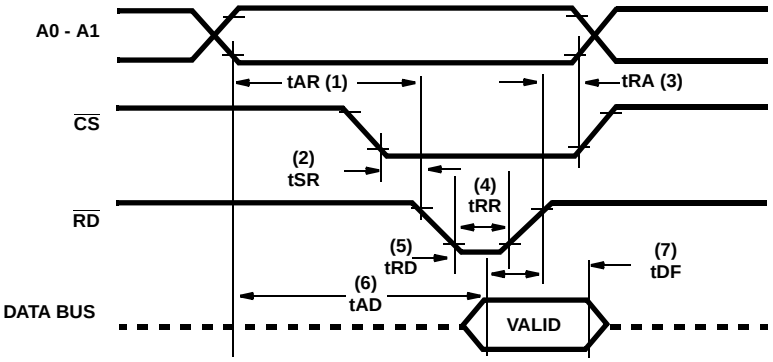


FIGURE 18. READ

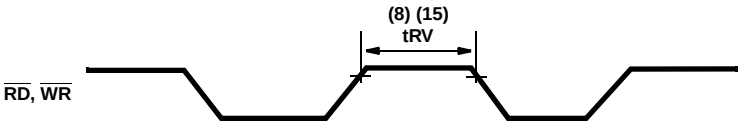


FIGURE 19. RECOVERY

## Timing Waveforms (Continued)

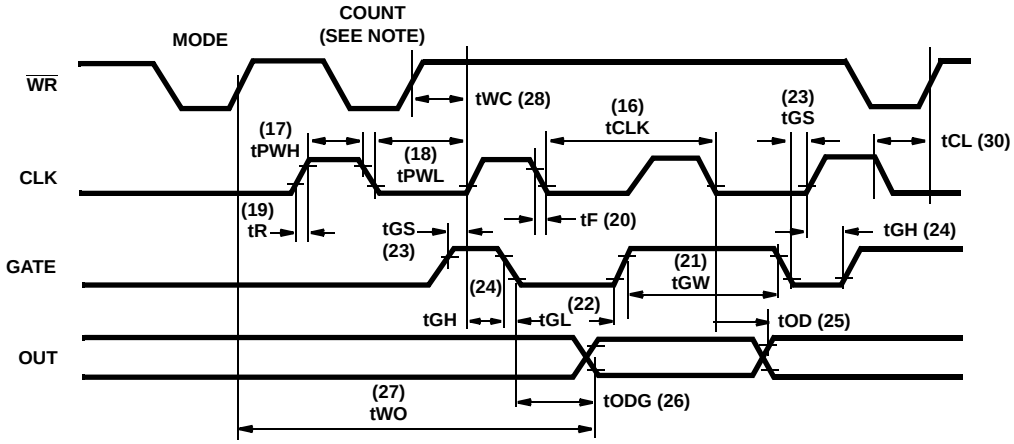


NOTE: LAST BYTE OF COUNT BEING WRITTEN

FIGURE 20. CLOCK AND GATE

## Burn-In Circuits

MD82C54 (CERDIP)

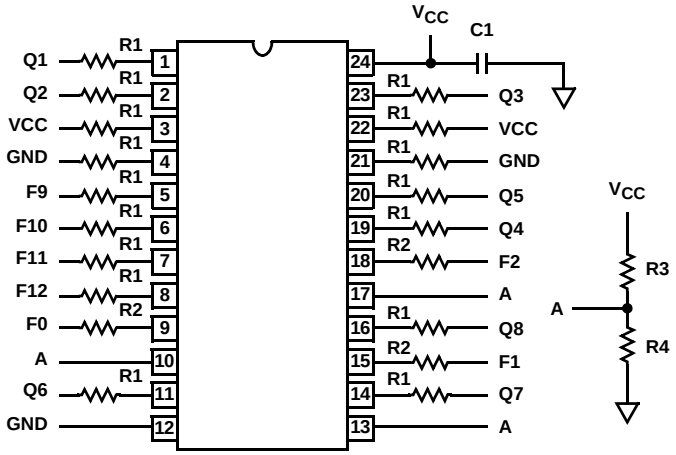


MR82C54 (CLCC)

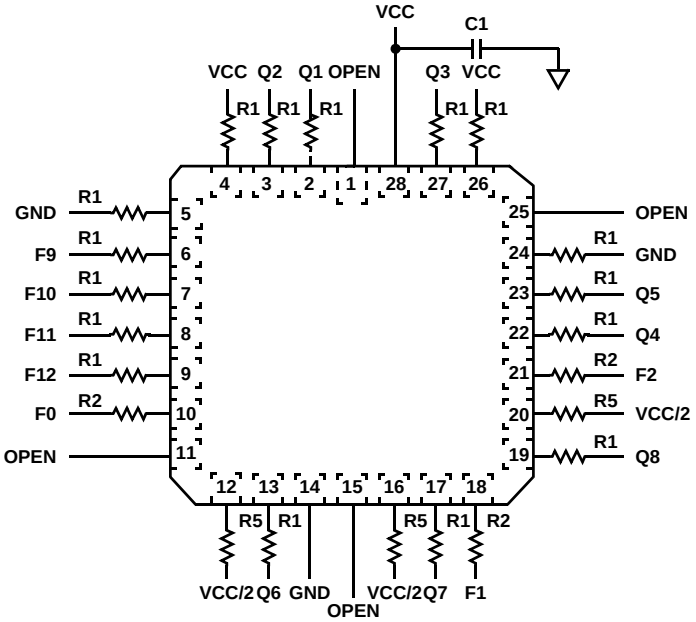


NOTES:

1. $V_{CC}$ = 5.5V ± 0.5V
2. GND = 0V
3. VIH = 4.5V ±10%
4. VIL = -0.2V to 0.4V
5. R1 = 47kΩ ±5%
6. R2 = 1.0kΩ ±5%
7. R3 = 2.7kΩ ±5%
8. R4 = 1.8kΩ ±5%
9. R5 = 1.2kΩ ±5%
10. C1 = 0.01μF Min
11. F0 = 100kHz ±10%
12. F1 = F0/2, F2 = F1/2, ...F12 = F11/2

## Die Characteristics

**DIE DIMENSIONS:**

129mils x 155mils x 19mils
(3270µm x 3940µm x 483µm)

**METALLIZATION:**

Type: Si-Al-Cu
Thickness: Metal 1: 8kÅ ± 0.75kÅ
Metal 2: 12kÅ ± 1.0kÅ

**GLASSIVATION:**

Type: Nitrox
Thickness: 10kÅ ± 3.0kÅ

## Metallization Mask Layout

**82C54**

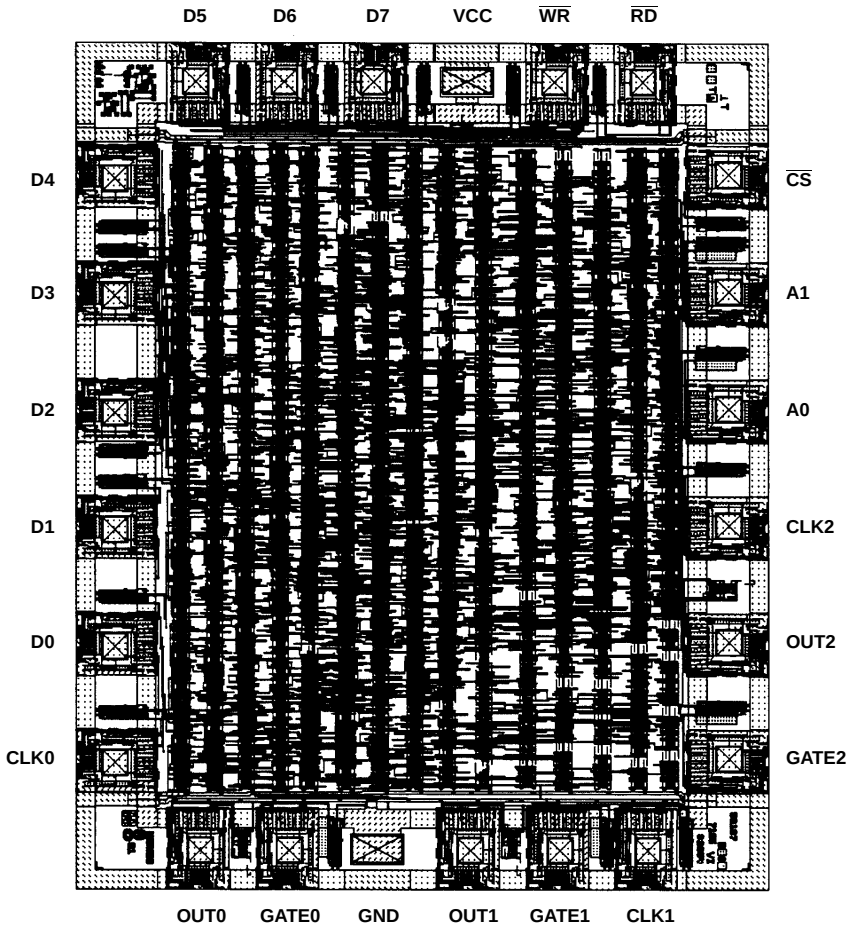

## Dual-In-Line Plastic Packages (PDIP)

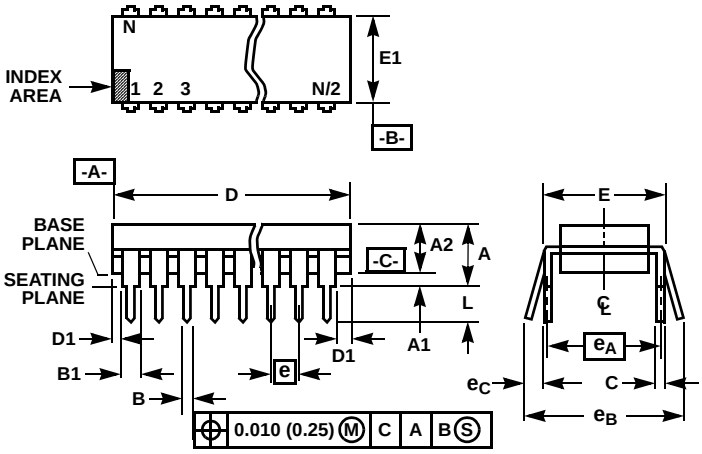


NOTES:

1. Controlling Dimensions: INCH. In case of conflict between English and Metric dimensions, the inch dimensions control.
2. Dimensioning and tolerancing per ANSI Y14.5M-1982.
3. Symbols are defined in the “MO Series Symbol List” in Section 2.2 of Publication No. 95.
4. Dimensions A, A1 and L are measured with the package seated in JEDEC seating plane gauge GS-3.
5. D, D1, and E1 dimensions do not include mold flash or protrusions. Mold flash or protrusions shall not exceed 0.010 inch (0.25mm).
6. E and $e_A$ are measured with the leads constrained to be perpendicular to datum -C-.
7. $e_B$ and $e_C$ are measured at the lead tips with the leads unconstrained. $e_C$ must be zero or greater.
8. B1 maximum dimensions do not include dambar protrusions. Dambar protrusions shall not exceed 0.010 inch (0.25mm).
9. N is the maximum number of terminal positions.
10. Corner leads (1, N, N/2 and N/2 + 1) for E8.3, E16.3, E18.3, E28.3, E42.6 will have a B1 dimension of 0.030 - 0.045 inch (0.76 - 1.14mm).

**E24.6** **(JEDEC MS-011-AA ISSUE B)**
**24 LEAD DUAL-IN-LINE PLASTIC PACKAGE**

| | INCHES | | MILLIMETERS | | |
|---|---|---|---|---|---|
| SYMBOL | MIN | MAX | MIN | MAX | NOTES |
| A | - | 0.250 | - | 6.35 | 4 |
| A1 | 0.015 | - | 0.39 | - | 4 |
| A2 | 0.125 | 0.195 | 3.18 | 4.95 | - |
| B | 0.014 | 0.022 | 0.356 | 0.558 | - |
| B1 | 0.030 | 0.070 | 0.77 | 1.77 | 8 |
| C | 0.008 | 0.015 | 0.204 | 0.381 | - |
| D | 1.150 | 1.290 | 29.3 | 32.7 | 5 |
| D1 | 0.005 | - | 0.13 | - | 5 |
| E | 0.600 | 0.625 | 15.24 | 15.87 | 6 |
| E1 | 0.485 | 0.580 | 12.32 | 14.73 | 5 |
| e | 0.100 BSC | | 2.54 BSC | | - |
| $e_A$ | 0.600 BSC | | 15.24 BSC | | 6 |
| $e_B$ | - | 0.700 | - | 17.78 | 7 |
| L | 0.115 | 0.200 | 2.93 | 5.08 | 4 |
| N | 24 | | 24 | | 9 |

Rev. 0 12/93

## Plastic Leaded Chip Carrier Packages (PLCC)

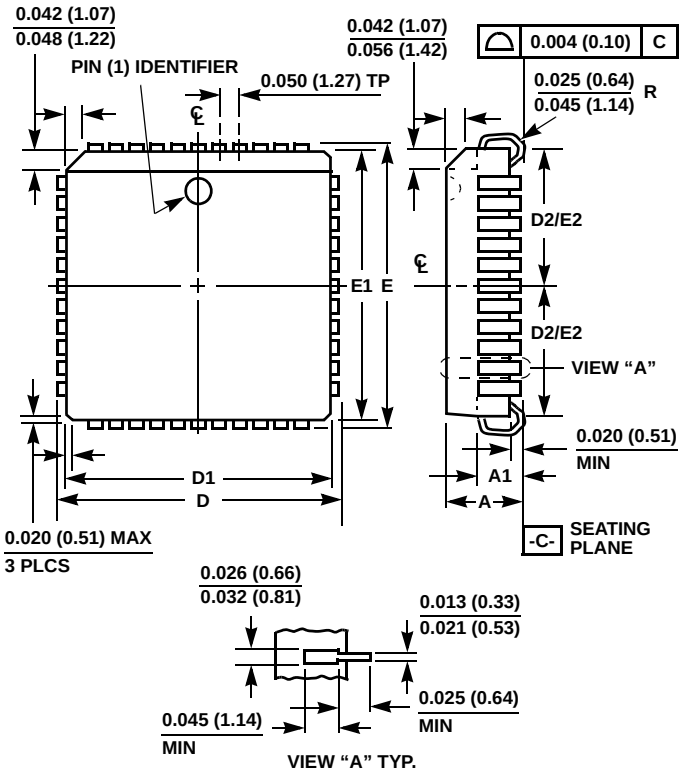


NOTES:

1. Controlling dimension: INCH. Converted millimeter dimensions are not necessarily exact.
2. Dimensions and tolerancing per ANSI Y14.5M-1982.
3. Dimensions D1 and E1 do not include mold protrusions. Allowable mold protrusion is 0.010 inch (0.25mm) per side. Dimensions D1 and E1 include mold mismatch and are measured at the extreme material condition at the body parting line.
4. To be measured at seating plane -C- contact point.
5. Centerline to be determined where center leads exit plastic body.
6. "N" is the number of terminal positions.

**N28.45** (JEDEC MS-018AB ISSUE A)
**28 LEAD PLASTIC LEADED CHIP CARRIER PACKAGE**

| SYMBOL | INCHES | | MILLIMETERS | | NOTES |
|---|---|---|---|---|---|
| | MIN | MAX | MIN | MAX | |
| A | 0.165 | 0.180 | 4.20 | 4.57 | - |
| A1 | 0.090 | 0.120 | 2.29 | 3.04 | - |
| D | 0.485 | 0.495 | 12.32 | 12.57 | - |
| D1 | 0.450 | 0.456 | 11.43 | 11.58 | 3 |
| D2 | 0.191 | 0.219 | 4.86 | 5.56 | 4, 5 |
| E | 0.485 | 0.495 | 12.32 | 12.57 | - |
| E1 | 0.450 | 0.456 | 11.43 | 11.58 | 3 |
| E2 | 0.191 | 0.219 | 4.86 | 5.56 | 4, 5 |
| N | 28 | | 28 | | 6 |

Rev. 2 11/97

## Ceramic Leadless Chip Carrier Packages (CLCC)

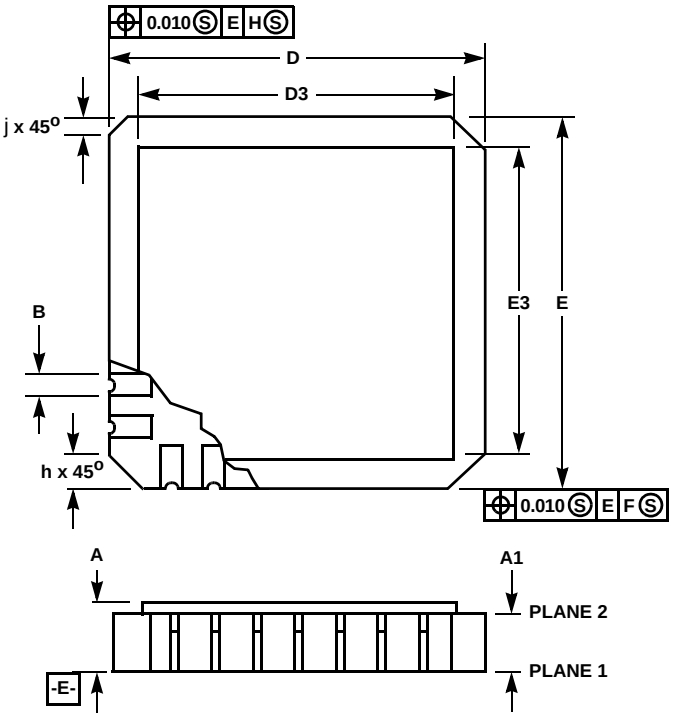


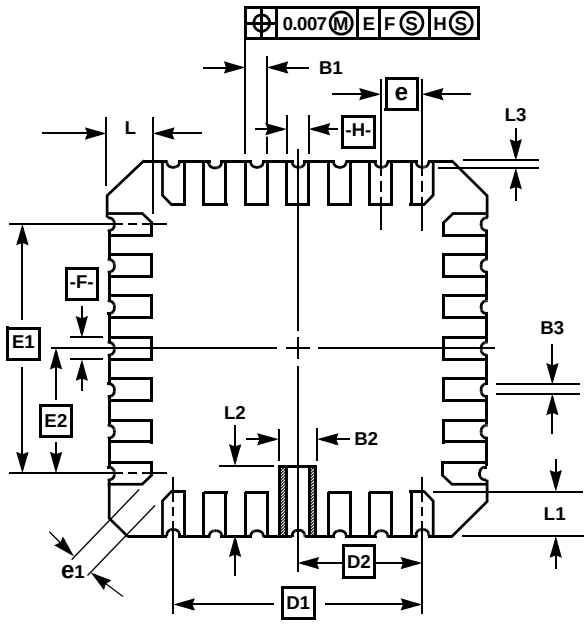


**J28.A** **MIL-STD-1835 CQCC1-N28 (C-4)**
**28 PAD CERAMIC LEADLESS CHIP CARRIER PACKAGE**

| SYMBOL | INCHES | | MILLIMETERS | | NOTES |
|---|---|---|---|---|---|
| | MIN | MAX | MIN | MAX | |
| A | 0.060 | 0.100 | 1.52 | 2.54 | 6, 7 |
| A1 | 0.050 | 0.088 | 1.27 | 2.23 | - |
| B | - | - | - | - | - |
| B1 | 0.022 | 0.028 | 0.56 | 0.71 | 2, 4 |
| B2 | 0.072 REF | | 1.83 REF | | - |
| B3 | 0.006 | 0.022 | 0.15 | 0.56 | - |
| D | 0.442 | 0.460 | 11.23 | 11.68 | - |
| D1 | 0.300 BSC | | 7.62 BSC | | - |
| D2 | 0.150 BSC | | 3.81 BSC | | - |
| D3 | - | 0.460 | - | 11.68 | 2 |
| E | 0.442 | 0.460 | 11.23 | 11.68 | - |
| E1 | 0.300 BSC | | 7.62 BSC | | - |
| E2 | 0.150 BSC | | 3.81 BSC | | - |
| E3 | - | 0.460 | - | 11.68 | 2 |
| e | 0.050 BSC | | 1.27 BSC | | - |
| e1 | 0.015 | - | 0.38 | - | 2 |
| h | 0.040 REF | | 1.02 REF | | 5 |
| j | 0.020 REF | | 0.51 REF | | 5 |
| L | 0.045 | 0.055 | 1.14 | 1.40 | - |
| L1 | 0.045 | 0.055 | 1.14 | 1.40 | - |
| L2 | 0.075 | 0.095 | 1.90 | 2.41 | - |
| L3 | 0.003 | 0.015 | 0.08 | 0.038 | - |
| ND | 7 | | 7 | | 3 |
| NE | 7 | | 7 | | 3 |
| N | 28 | | 28 | | 3 |

Rev. 0 5/18/94

NOTES:

1. Metallized castellations shall be connected to plane 1 terminals and extend toward plane 2 across at least two layers of ceramic or completely across all of the ceramic layers to make electrical connection with the optional plane 2 terminals.
2. Unless otherwise specified, a minimum clearance of 0.015 inch (0.38mm) shall be maintained between all metallized features (e.g., lid, castellations, terminals, thermal pads, etc.)
3. Symbol “N” is the maximum number of terminals. Symbols “ND” and “NE” are the number of terminals along the sides of length “D” and “E”, respectively.
4. The required plane 1 terminals and optional plane 2 terminals (if used) shall be electrically connected.
5. The corner shape (square, notch, radius, etc.) may vary at the manufacturer’s option, from that shown on the drawing.
6. Chip carriers shall be constructed of a minimum of two ceramic layers.
7. Dimension “A” controls the overall package thickness. The maximum “A” dimension is package height before being solder dipped.
8. Dimensioning and tolerancing per ANSI Y14.5M-1982.
9. Controlling dimension: INCH.

## Ceramic Dual-In-Line Frit Seal Packages (CERDIP)

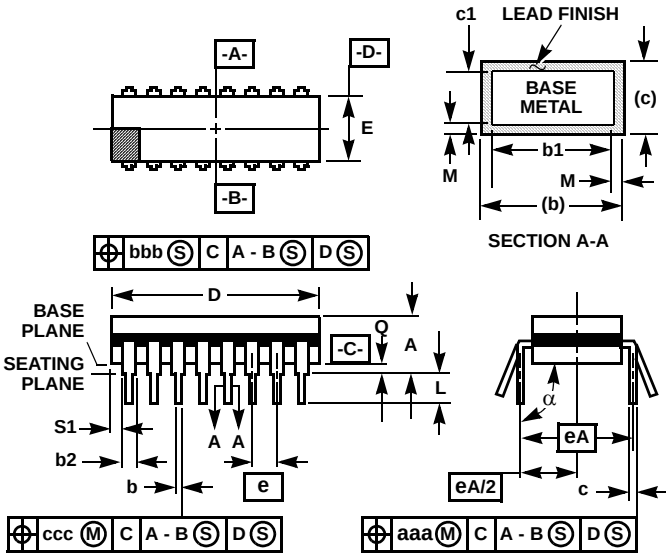


NOTES:

1. Index area: A notch or a pin one identification mark shall be located adjacent to pin one and shall be located within the shaded area shown. The manufacturer's identification shall not be used as a pin one identification mark.
2. The maximum limits of lead dimensions b and c or M shall be measured at the centroid of the finished lead surfaces, when solder dip or tin plate lead finish is applied.
3. Dimensions b1 and c1 apply to lead base metal only. Dimension M applies to lead plating and finish thickness.
4. Corner leads (1, N, N/2, and N/2+1) may be configured with a partial lead paddle. For this configuration dimension b3 replaces dimension b2.
5. This dimension allows for off-center lid, meniscus, and glass overrun.
6. Dimension Q shall be measured from the seating plane to the base plane.
7. Measure dimension S1 at all four corners.
8. N is the maximum number of terminal positions.
9. Dimensioning and tolerancing per ANSI Y14.5M - 1982.
10. Controlling dimension: INCH.

**F24.6 MIL-STD-1835 GDIP1-T24 (D-3, CONFIGURATION A)**
**24 LEAD CERAMIC DUAL-IN-LINE FRIT SEAL PACKAGE**

| SYMBOL | INCHES | | MILLIMETERS | | NOTES |
|---|---|---|---|---|---|
| | MIN | MAX | MIN | MAX | |
| A | - | 0.225 | - | 5.72 | - |
| b | 0.014 | 0.026 | 0.36 | 0.66 | 2 |
| b1 | 0.014 | 0.023 | 0.36 | 0.58 | 3 |
| b2 | 0.045 | 0.065 | 1.14 | 1.65 | - |
| b3 | 0.023 | 0.045 | 0.58 | 1.14 | 4 |
| c | 0.008 | 0.018 | 0.20 | 0.46 | 2 |
| c1 | 0.008 | 0.015 | 0.20 | 0.38 | 3 |
| D | - | 1.290 | - | 32.77 | 5 |
| E | 0.500 | 0.610 | 12.70 | 15.49 | 5 |
| e | 0.100 BSC | | 2.54 BSC | | - |
| eA | 0.600 BSC | | 15.24 BSC | | - |
| eA/2 | 0.300 BSC | | 7.62 BSC | | - |
| L | 0.120 | 0.200 | 3.05 | 5.08 | - |
| Q | 0.015 | 0.075 | 0.38 | 1.91 | 6 |
| S1 | 0.005 | - | 0.13 | - | 7 |
| α | $90^o$ | $105^o$ | $90^o$ | $105^o$ | - |
| aaa | - | 0.015 | - | 0.38 | - |
| bbb | - | 0.030 | - | 0.76 | - |
| ccc | - | 0.010 | - | 0.25 | - |
| M | - | 0.0015 | - | 0.038 | 2, 3 |
| N | 24 | | 24 | | 8 |

Rev. 0 4/94

All Intersil U.S. products are manufactured, assembled and tested utilizing ISO9000 quality systems.
Intersil Corporation's quality certifications can be viewed at www.intersil.com/design/quality

*Intersil products are sold by description only. Intersil Corporation reserves the right to make changes in circuit design, software and/or specifications at any time without notice. Accordingly, the reader is cautioned to verify that data sheets are current before placing orders. Information furnished by Intersil is believed to be accurate and reliable. However, no responsibility is assumed by Intersil or its subsidiaries for its use; nor for any infringements of patents or other rights of third parties which may result from its use. No license is granted by implication or otherwise under any patent or patent rights of Intersil or its subsidiaries.*

For information regarding Intersil Corporation and its products, see www.intersil.com

# OCEAN CHIPS
## Океан Электроники
### Поставка электронных компонентов

Компания «Океан Электроники» предлагает заключение долгосрочных отношений при поставках импортных электронных компонентов на взаимовыгодных условиях!

Наши преимущества:

- Поставка оригинальных импортных электронных компонентов напрямую с производств Америки, Европы и Азии, а так же с крупнейших складов мира;
- Широкая линейка поставок активных и пассивных импортных электронных компонентов (более 30 млн. наименований);
- Поставка сложных, дефицитных, либо снятых с производства позиций;
- Оперативные сроки поставки под заказ (от 5 рабочих дней);
- Экспресс доставка в любую точку России;
- Помощь Конструкторского Отдела и консультации квалифицированных инженеров;
- Техническая поддержка проекта, помощь в подборе аналогов, поставка прототипов;
- Поставка электронных компонентов под контролем ВП;
- Система менеджмента качества сертифицирована по Международному стандарту ISO 9001;
- При необходимости вся продукция военного и аэрокосмического назначения проходит испытания и сертификацию в лаборатории (по согласованию с заказчиком);
- Поставка специализированных компонентов военного и аэрокосмического уровня качества (Xilinx, Altera, Analog Devices, Intersil, Interpoint, Microsemi, Actel, Aeroflex, Peregrine, VPT, Syfer, Eurofarad, Texas Instruments, MS Kennedy, Miteq, Cobham, E2V, MA-COM, Hittite, Mini-Circuits, General Dynamics и др.);

Компания «Океан Электроники» является официальным дистрибьютором и эксклюзивным представителем в России одного из крупнейших производителей разъемов военного и аэрокосмического назначения **«JONHON»**, а так же официальным дистрибьютором и эксклюзивным представителем в России производителя высокотехнологичных и надежных решений для передачи СВЧ сигналов **«FORSTAR»**.

AVIC JONHON

**«JONHON»** (основан в 1970 г.)

Разъемы специального, военного и аэрокосмического назначения:

(Применяются в военной, авиационной, аэрокосмической, морской, железнодорожной, горно- и нефтедобывающей отраслях промышленности)

**«FORSTAR»** (основан в 1998 г.)

ВЧ соединители, коаксиальные кабели, кабельные сборки и микроволновые компоненты:

(Применяются в телекоммуникациях гражданского и специального назначения, в средствах связи, РЛС, а так же военной, авиационной и аэрокосмической отраслях промышленности).

FORSTAR®

Телефон: 8 (812) 309-75-97 (многоканальный)
Факс: 8 (812) 320-03-32
Электронная почта: ocean@oceanchips.ru
Web: http://oceanchips.ru/
Адрес: 198099, г. Санкт-Петербург, ул. Калинина, д. 2, корп. 4, лит. А