Features

- **Serial EEPROM Family for Configuring Altera FLEX® 10K Devices**
- **Simple, Easy-to-use 4-pin Interface**
- **E^2 Programmable 1M Bit Serial Memories Designed To Store Configuration Programs For Programmable Gate Arrays**
- **Cascadable To Support Additional Configurations or Future Higher-density Arrays**
- **Low-power CMOS EEPROM Process**
- **Programmable Reset Polarity**
- **Available in the Space-efficient Surface-mount PLCC Package**
- **In-System Programmable Via 2-Wire Bus**
- **Emulation of 24CXX Serial EPROMs**
- **Available in 3.3V ± 10% LV and 5V ± 5% C Versions**

Description

The AT17C512/010A and AT17LV512/010A (AT17A Series) FPGA Configuration EEPROMs (Configurators) provide and easy-to-use, cost-effective configuration memory for programming Altera FLEX Field Programmable Gate Arrays, FPGA, (the “devices”). The AT17A Series is packaged in the popular 20-pin PLCC package. The AT17A Series family uses a simple serial-access procedure to configure one or more FPGA devices. The AT17A Series organization supplies enough memory to configure one or multiple smaller FPGAs. Using a special feature of the AT17A Series, the user can select the polarity of the reset function by programming an EEPROM byte. The AT17C/LV512/010A parts generate their own internal clock and can be used as a system “master” for loading the FPGA devices.

The Atmel devices also supports a system friendly READY pin and a write protect mechanism. The READY pin is used to simplify system power-up considerations. The WP1 pin is used to protect part of the device memory during in-system programming.

The AT17A Series can be programmed with industry standard programmers.

Pin Configurations

20-Pin PLCC

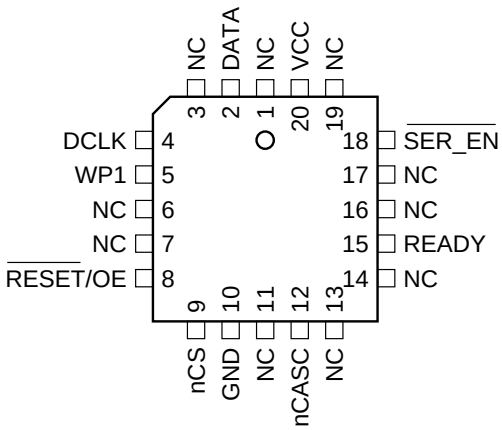

FPGA Serial Configuration Memories

AT17C512A
AT17LV512A
AT17C010A
AT17LV010A

Rev. 0974A–04/98

Block Diagram

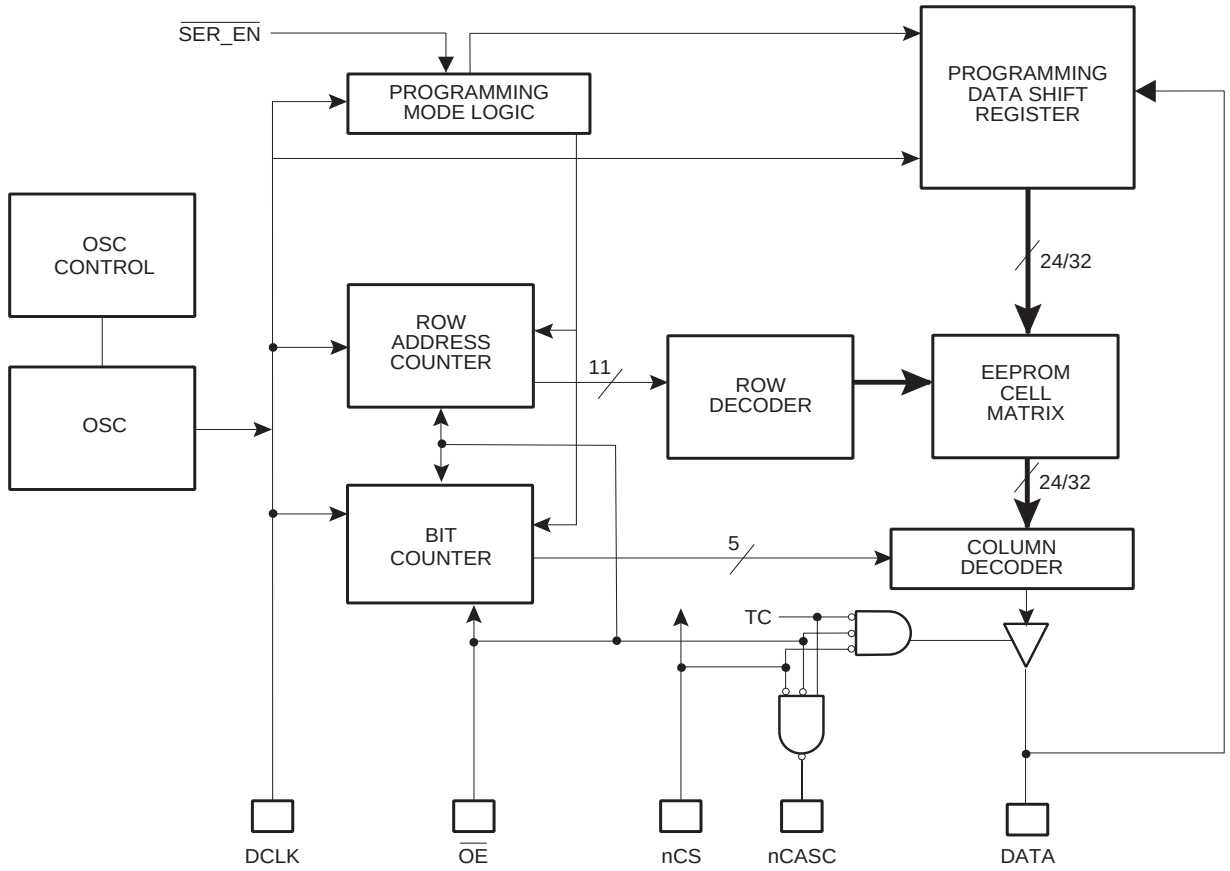

Device Configuration

The control signals for configuration EEPROMs–nCS, OE, and DCLK–interface directly with the FPGA device control signals. All FPGA devices can control the entire configuration process and retrieve data from the configuration EEPROM without requiring an external intelligent controller.

The configuration EEPROM device's OE and nCS pins control the tri-state buffer on the DATA output pin and enable the address counter and the oscillator. When OE is driven low, the configuration EEPROM device resets the address counter and tri-states its DATA pin. The nCS pin controls the output of the AT17A Series. If nCS is held high after the OE reset pulse, the counter is disabled and the DATA output pin is tri-stated. When nCS is driven low, the counter and the DATA output pin are enabled. When OE is driven low again, the address counter is reset and the DATA output pin is tri-stated, regardless of the state of the nCS.

When the configurator has driven out all of its data and nCASC is driven low, the device tri-states the DATA pin to avoid contention with other configurators. Upon power-up, the address counter is automatically reset.

FPGA Device Configuration

FPGA devices can be configured with an AT17A Series EEPROM. The AT17A Series device stores configuration data in its EEPROM array and clocks the data out serially with its internal oscillator. The OE, nCS, and DCLK pins supply the control signals for the address counter and the output tri-state buffer. The AT17A Series device sends a serial bitstream of configuration data to its DATA pin, which is connected to the DATA0 input pin on the FPGA device.

When configuration data for a FPGA device exceeds the capacity of a single AT17A Series device, multiple AT17A Series devices can be serially linked together. When multiple AT17A Series devices are required, the nCASC and nCS pins provide handshaking between the AT17A Series devices.

The position of an AT17A Series device in a chain determines its operation. The first AT17A Series device in a Configurator chain is powered up or reset with nCS low and is configured for FPGA devices protocol. This AT17A Series device supplies all clock pulses to one or more FPGA devices and to any downstream AT17A Series during configuration. The first AT17A Series device also provides the first stream of data to the FPGA devices during

multi-device configuration. Once the first AT17A Series device finishes sending configuration data, it drives its nCASC pin low, which drives the nCS pin of the second AT17A Series device low. This activates the second AT17A Series device to send configuration data to the FPGA device.

The first AT17A Series device clocks all subsequent AT17A Series devices until configuration is complete. Once all configuration data is transferred and nCS on the first AT17A Series device is driven high by CONF_DONE on the FPGA devices, the first AT17A Series device clocks 16 additional cycles to initialize the FPGA device. Then the first AT17A Series device goes into zero-power (idle) state. If nCS on the first AT17A Series device is driven high before all configuration data is transferred–or if the nCS is not driven high after all configuration data is transferred–the nSTATUS is driven low, indicating a configuration error.

Figure 1. FPGA Device Configured with Two AT17A Series Devices

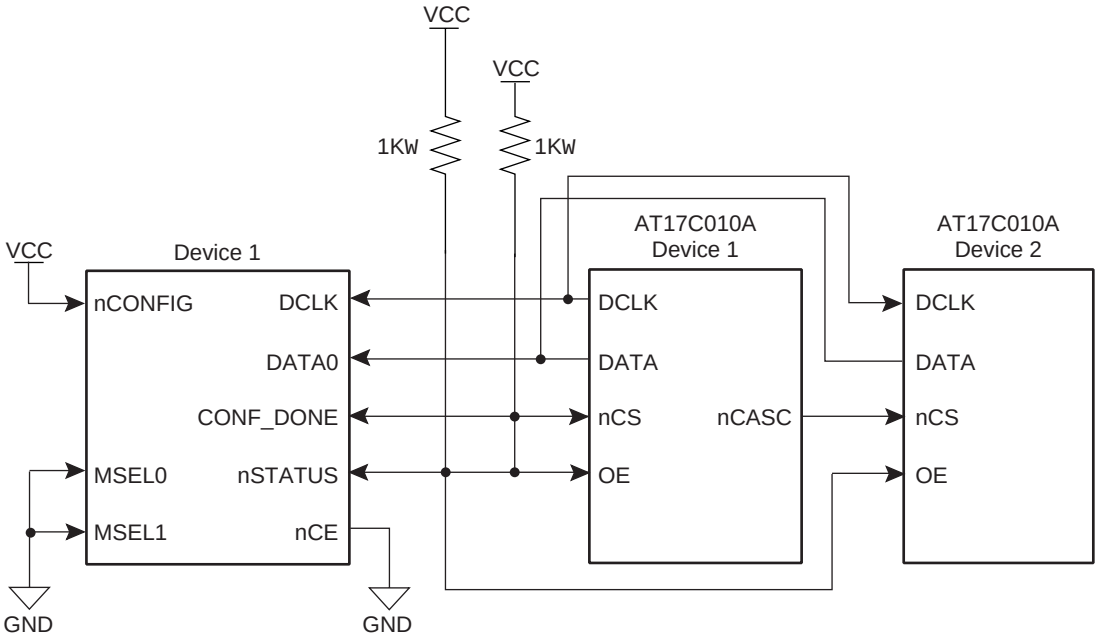

Pin Configurations

Pin Number (20-Pin PLCC)	Pin Name	Pin Type	Description
2	DATA	Output	Serial data output.
4	DCLK	I/O	Clock output or clock input. Rising edges on DCLK increment the internal address counter and present the next bit of data to the DATA pin. The counter is incremented only if the OE input is held high, the nCS input is held low, and all configuration data has not been transferred to the target device (otherwise, in FPGA 10K master mode, the DCLK pin drives low).
5	WP1	Input	WRITE PROTECT (1). Used to protect portions of memory during programming. See programming guide for details.
8	$\overline{\text{RESET}}$/OE	Input	Output enable (active high) and reset (active low). A low logic level resets the address counter. A high logic level enables DATA and permits the address counter to count. In the mode, if this pin is low (reset), the internal oscillator becomes inactive and DCLK drives low.
9	nCS	Input	Chip select input (active low). A low input allows DCLK to increment the address counter and enables DATA to drive out. If the AT17A Series is reset with nCS low, the device initializes as the first device in a daisy-chain. If the AT17A Series is reset with nCS high, the device initializes as the next AT17A Series device in the chain
10	GND	Ground	A 0.2 µF decoupling capacitor should be placed between the V_{CC} and GND pins.
12	nCASC	Output	Cascade select output (active low). This output goes low when the address counter has reached its maximum value. In a daisy-chain of AT17A Series devices, the nCASC pin of one device is usually connected to the nCS input pin of the next device in the chain, which permits DCLK to clock data from the next AT17A Series device in the chain.
	A2	Input	Device selection input, A2. This is used to enable (or select) the device during programming, when $\overline{\text{SER_EN}}$ is Low (see Programming Guide for more details)
15	READY	Output	Open collector reset state indicator. Driven Low during power-up reset, released when power-up is complete. (Recommend a 4.7KΩ Pull-up on this pin if used).
18	$\overline{\text{SER_EN}}$	Input	Serial enable is normally high during FPGA loading operations. Bringing SER_EN Low, enables the two wire serial interface mode for programming.
20	V_{CC}	Power	Power pin.

Absolute Maximum Ratings*

Operating Temperature	-55°C to +125°C
Storage Temperature	-65°C to +150°C
Voltage on Any Pin with Respect to Ground	-0.1V to V_{CC} + 0.5V
Supply Voltage (V_{CC})	-0.5V to +7.0V
Maximum Soldering Temp. (10 s @ 1/16 in.)	260°C
ESD (R_{ZAP} = 1.5K, C_{ZAP} = 100 pF)	2000V

*NOTICE: Stresses beyond those listed under Absolute Maximum Ratings may cause permanent damage to the device. These are stress ratings only, and functional operation of the device at these or any other conditions beyond those listed under Operating Conditions is not implied. Exposure to Absolute Maximum Ratings conditions for extended periods of time may affect device reliability.

Operating Conditions

Symbol	Description		AT17CXXXA		AT17LVXXXA		Units
			Min	Max	Min	Max	
V_{CC}	Commercial	Supply voltage relative to GND -0°C to +70°C	4.75	5.25	3.0	3.6	V
	Industrial	Supply voltage relative to GND -40°C to +85°C	4.5	5.5	3.0	3.6	V
	Military	Supply voltage relative to GND -55°C to +125°C	4.5	5.5	3.0	3.6	V

DC Characteristics

V_{CC} = 5V ± 5% Commercial / 5V ± 10% Ind./Mil.

Symbol	Description		Min	Max	Units
V_{IH}	High-level input voltage		2.0	V_{CC}	V
V_{IL}	Low-level input voltage		0	0.8	V
V_{OH}	High-level output voltage (I_{OH} = -4 mA)	Commercial	3.7		V
V_{OL}	Low-level output voltage (I_{OL} = +4 mA)			0.32	V
V_{OH}	High-level output voltage (I_{OH} = -4 mA)	Industrial	3.6		V
V_{OL}	Low-level output voltage (I_{OL} = +4 mA)			0.37	V
V_{OH}	High-level output voltage (I_{OH} = -4 mA)	Military	3.5		V
V_{OL}	Low-level output voltage (I_{OL} = +4 mA)			0.4	V
I_{CCA}	Supply current, active mode			10	mA
I_L	Input or output leakage current (V_{IN} = V_{CC} or GND)		-10	10	µA
I_{CCS}	Supply current, standby mode AT17010A/512A	Commercial		150	µA
		Industrial/Military		150	µA

DC Characteristics

V_{CC} = 3.3V ± 10%

Symbol	Description		Min	Max	Units
V_{IH}	High-level input voltage		2.0	V_{CC}	V
V_{IL}	Low-level input voltage		0	0.8	V
V_{OH}	High-level output voltage (I_{OH} = -2.5 mA)	Commercial	2.4		V
V_{OL}	Low-level output voltage (I_{OL} = +3 mA)			0.4	V
V_{OH}	High-level output voltage (I_{OH} = -2 mA)	Industrial	2.4		V
V_{OL}	Low-level output voltage (I_{OL} = +3 mA)			0.4	V
V_{OH}	High-level output voltage (I_{OH} = -2 mA)	Military	2.4		V
V_{OL}	Low-level output voltage (I_{OL} = +2.5 mA)			0.4	V
I_{CCA}	Supply current, active mode			5	mA
I_L	Input or output leakage current (V_{IN} = V_{CC} or GND)		-10	10	µA
I_{CCS}	Supply current, standby mode	Commercial		50	µA
		Industrial/Military		50	µA

AC Characteristics

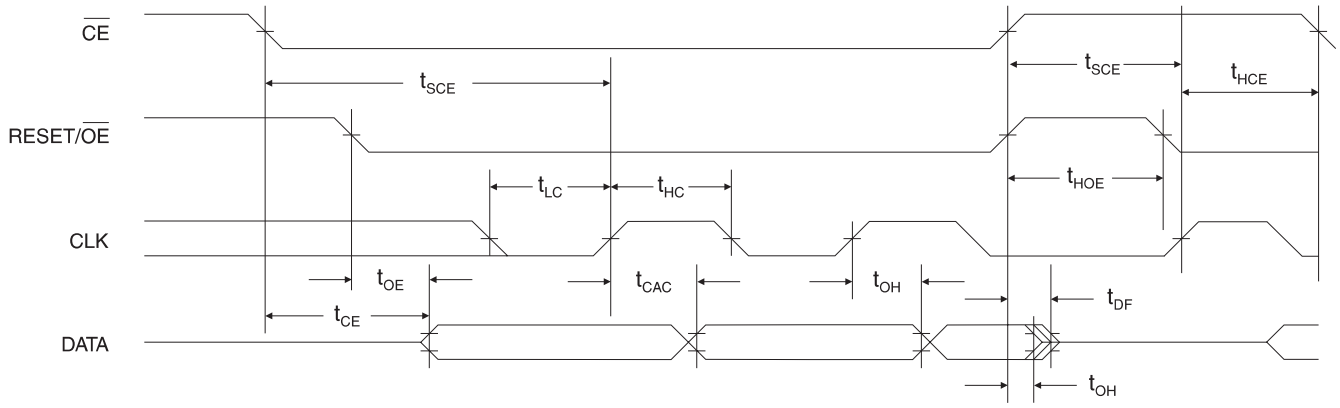

AC Characteristics When Cascading

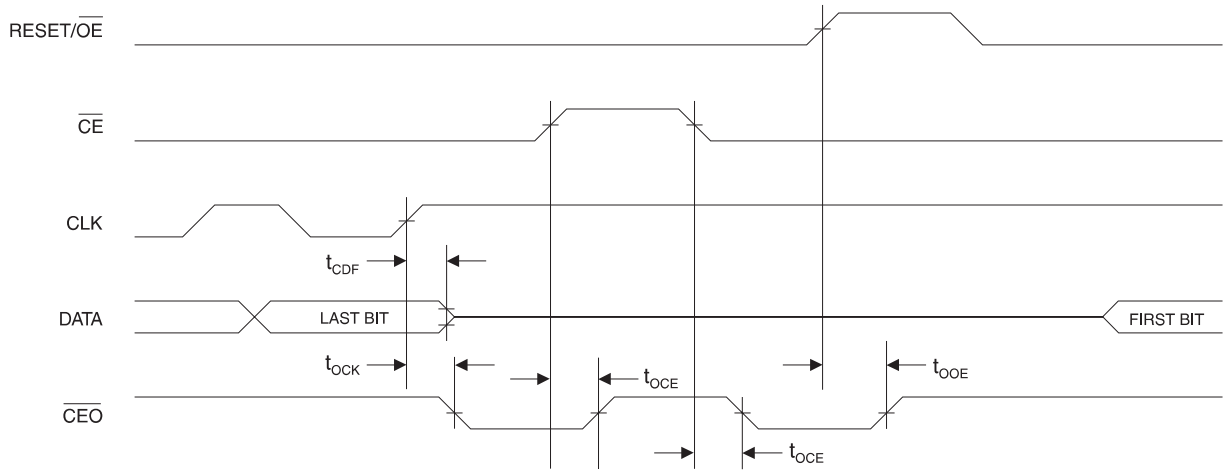

AC Characteristics for AT17C010A/512A

V_{CC} = 5V ± 5% Commercial / V_{CC} = 5V ± 10% Ind./Mil

Symbol	Description	Commercial		Industrial/Military		Units
		Min	Max	Min	Max	
T_{OE} (2)	OE to Data Delay		30		35	ns
T_{CE} (2)	nCS to Data Delay		45		45	ns
T_{CAC} (2)	CLK to Data Delay		50		55	ns
T_{OH} (2)	Data Hold From nCS, OE, or DCLK	0		0		ns
T_{DF} (3)	nCS or OE to Data Float Delay		50		50	ns
T_{LC}	CLK Low Time Slave Mode	20		20		ns
T_{HC}	CLK High Time Slave Mode	20		20		ns
T_{SCE}	nCS Setup Time to DCLK (to guarantee proper counting)	20		25		ns
T_{HCE}	nCS Hold Time to DCLK (to guarantee proper counting)	0		0		ns
T_{HOE}	OE High Time (Guarantees Counter Is Reset)	20		20		ns
F_{MAX}	MAX Input Clock Frequency Slave Mode	15		15		MHz
T_{LC}	CLK Low Time Master Mode	30	250	30	250	ns
T_{HC}	CLK High Time Master Mode	30	250	30	250	ns
V_{RDY}	Ready Pin Open Collector Voltage	1.2	2.4	1.2	2.4	V

AC Characteristics for AT17C010A/512A When Cascading

V_{CC} = 5V ± 5% Commercial / V_{CC} = 5V ± 10% Ind./Mil.

Symbol	Description	Commercial		Industrial/Military		Units
		Min	Max	Min	Max	
T_{CDF} (3)	DCLK to Data Float Delay		50		50	ns
T_{OCK} (2)	DCLK to nCASC Delay		35		40	ns
T_{OCE} (2)	CE to nCASC Delay		35		35	ns
T_{OOE} (2)	OE to nCASC Delay		30		30	ns

Notes: 1. Preliminary specifications for military operating range only.

2. AC test load = 50 pF.

3. Float delays are measured with 5 pF AC loads. Transition is measured ± 200 mV from steady state active levels.

AC Characteristics for AT17C010A/512A

V_{CC} = 3.3V ± 10% Commercial / V_{CC} = 3.3V ± 10% Ind./Mil

Symbol	Description	Commercial		Industrial/Military		Units
		Min	Max	Min	Max	
T_{OE}[2]	OE to Data Delay		50		55	ns
T_{CE}[2]	nCS to Data Delay		55		60	ns
T_{CAC}[2]	CLK to Data Delay		60		65	ns
T_{OH}[2]	Data Hold From nCS, OE, or DCLK	0		0		ns
T_{DF}[3]	nCS or OE to Data Float Delay		50		50	ns
T_{LC}	CLK Low Time Slave Mode	25		25		ns
T_{HC}	CLK High Time Slave Mode	25		25		ns
T_{SCE}	nCS Setup Time to DCLK (to guarantee proper counting)	35		40		ns
T_{HCE}	nCS Hold Time to DCLK (to guarantee proper counting)	0		0		ns
T_{HOE}	OE High Time (Guarantees Counter Is Reset)	20		20		ns
F_{MAX}[4]	MAX Input Clock Frequency Slave Mode	15		10		MHz
T_{LC}	CLK Low Time Master Mode	30	300	30	300	ns
T_{HC}	CLK High Time Master Mode	30	300	30	300	ns
V_{RDY}	Ready Pin Open Collector Voltage	1.2	2.4	1.2	2.4	V

AC Characteristics for AT17C010A/512A When Cascading

V_{CC} = 3.3V ± 10% Commercial / V_{CC} =3.3V ± 10% Ind./Mil.

Symbol	Description	Commercial		Industrial/Military		Units
		Min	Max	Min	Max	
T_{CDF}[3]	DCLK to Data Float Delay		50		50	ns
T_{OCK}[2]	DCLK to nCASC Delay		50		55	ns
T_{OCE}[2]	CE to nCASC Delay		35		40	ns
T_{OOE}[2]	OE to nCASC Delay		35		35	ns

Notes:
1. Preliminary specifications for military operating range only.
2. AC test load = 50 pF.
3. Float delays are measured with 5 pF AC loads. Transition is measured ± 200 mV from steady state active levels.
4. During cascade F_{MAX} = 12.5 MHz

Ordering Information - 5V Devices

Memory Size (K)	Ordering Code	Package	Operation Range
512K[1]	AT17C512A-10JC	20J	Commercial (0°C to 70°C)
	AT17C512A-10JI	20J	Industrial (-40°C to 85°C)
1M Bit[2]	AT17C010A-10JC	20J	Commercial (0°C to 70°C)
	AT17C010A-10JI	20J	Industrial (-40°C to 85°C)

Ordering Information - 3.3V Devices

Memory Size (K)	Ordering Code	Package	Operation Range
512K[1]	AT17LV512A-10JC	20J	Commercial (0°C to 70°C)
	AT17LV512A-10JI	20J	Industrial (-40°C to 85°C)
1M Bit[2]	AT17LV010A-10JC	20J	Commercial (0°C to 70°C)
	AT17LV010A-10JI	20J	Industrial (-40°C to 85°C)

Notes: 1. Use 512K density parts to replace Altera EPC1441.
2. Use 1M density parts to replace Altera EPC1

Package Type	
20J	20-Lead, Plastic J-Leaded Chip Carrier (PLCC)

Packaging Information

20J, 20-Lead, Plastic J-Leaded Chip Carrier (PLCC)
Dimensions in Inches and (Millimeters)
JEDEC STANDARD MS-018 AA

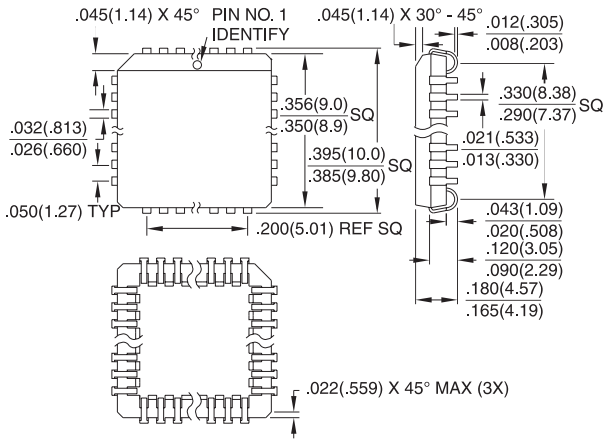

OCEAN CHIPS
Океан Электроники
Поставка электронных компонентов

Компания «Океан Электроники» предлагает заключение долгосрочных отношений при поставках импортных электронных компонентов на взаимовыгодных условиях!

Наши преимущества:

- Поставка оригинальных импортных электронных компонентов напрямую с производств Америки, Европы и Азии, а так же с крупнейших складов мира;
- Широкая линейка поставок активных и пассивных импортных электронных компонентов (более 30 млн. наименований);
- Поставка сложных, дефицитных, либо снятых с производства позиций;
- Оперативные сроки поставки под заказ (от 5 рабочих дней);
- Экспресс доставка в любую точку России;
- Помощь Конструкторского Отдела и консультации квалифицированных инженеров;
- Техническая поддержка проекта, помощь в подборе аналогов, поставка прототипов;
- Поставка электронных компонентов под контролем ВП;
- Система менеджмента качества сертифицирована по Международному стандарту ISO 9001;
- При необходимости вся продукция военного и аэрокосмического назначения проходит испытания и сертификацию в лаборатории (по согласованию с заказчиком);
- Поставка специализированных компонентов военного и аэрокосмического уровня качества (Xilinx, Altera, Analog Devices, Intersil, Interpoint, Microsemi, Actel, Aeroflex, Peregrine, VPT, Syfer, Eurofarad, Texas Instruments, MS Kennedy, Miteq, Cobham, E2V, MA-COM, Hittite, Mini-Circuits, General Dynamics и др.);

Компания «Океан Электроники» является официальным дистрибьютором и эксклюзивным представителем в России одного из крупнейших производителей разъемов военного и аэрокосмического назначения «**JONHON**», а так же официальным дистрибьютором и эксклюзивным представителем в России производителя высокотехнологичных и надежных решений для передачи СВЧ сигналов «**FORSTAR**».

AVIC JONHON

«JONHON» (основан в 1970 г.)

Разъемы специального, военного и аэрокосмического назначения:

(Применяются в военной, авиационной, аэрокосмической, морской, железнодорожной, горно- и нефтедобывающей отраслях промышленности)

«FORSTAR» (основан в 1998 г.)

ВЧ соединители, коаксиальные кабели, кабельные сборки и микроволновые компоненты:

(Применяются в телекоммуникациях гражданского и специального назначения, в средствах связи, РЛС, а так же военной, авиационной и аэрокосмической отраслях промышленности).

FORSTAR®

Телефон: 8 (812) 309-75-97 (многоканальный)
Факс: 8 (812) 320-03-32
Электронная почта: ocean@oceanchips.ru
Web: http://oceanchips.ru/
Адрес: 198099, г. Санкт-Петербург, ул. Калинина, д. 2, корп. 4, лит. А