FAIRCHILD SEMICONDUCTOR™

November 1988
Revised November 1999

74AC191
Up/Down Counter with Preset and Ripple Clock

General Description

The AC191 is a reversible modulo 16 binary counter. It features synchronous counting and asynchronous presetting. The preset feature allows the AC191 to be used in programmable dividers. The Count Enable input, the Terminal Count output and the Ripple Clock output make possible a variety of methods of implementing multistage counters. In the counting modes, state changes are initiated by the rising edge of the clock.

Features

- I_{CC} reduced by 50%
- High speed—133 MHz typical count frequency
- Synchronous counting
- Asynchronous parallel load
- Cascadable
- Outputs source/sink 24 mA

Ordering Code:

Order Number	Package Number	Package Description
74AC191SC	M16A	16-Lead Small Outline Integrated Circuit (SOIC), JEDEC MS-012, 0.150” Narrow Body
74AC191SJ	M16D	16-Lead Small Outline Package (SOP), EIAJ TYPE II, 5.3mm Wide
74AC191MTC	MTC16	16-Lead Thin Shrink Small Outline Package (TSSOP), JEDEC MO-153, 4.4mm Wide
74AC191PC	N16E	16-Lead Plastic Dual-In-Line Package (PDIP), JEDEC MS-001, 0.300” Wide

Device also available in Tape and Reel. Specify by appending suffix letter “X” to the ordering code.

Logic Symbols

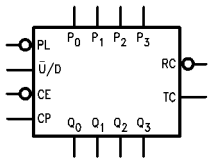

IEEE/IEC

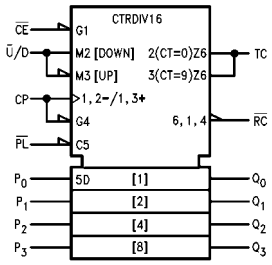

Connection Diagram

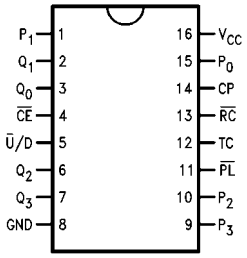

Pin Descriptions

Pin Names	Description
$\overline{CE}$	Count Enable Input
CP	Clock Pulse Input
P_0–P_3	Parallel Data Inputs
$\overline{PL}$	Asynchronous Parallel Load Input
$\overline{U}$ /D	Up/Down Count Control Input
Q_0–Q_3	Flip-Flop Outputs
$\overline{RC}$	Ripple Clock Output
TC	Terminal Count Output

FACT™ is a trademark of Fairchild Semiconductor Corporation.

© 1999 Fairchild Semiconductor Corporation

$\overline{RC}$ Truth Table

Inputs				Outputs
$\overline{PL}$	$\overline{CE}$	TC (Note 1)	CP	$\overline{RC}$
H	L	H	⊓	⊓
H	H	X	X	H
H	X	L	X	H
L	X	X	X	H

H = HIGH Voltage Level
L = LOW Voltage Level
X = Immaterial
⎍ = LOW-to-HIGH Transition
⊓ = Clock Pulse

Note 1: TC is generated internally

Functional Description

The AC191 is a synchronous up/down counter. The AC191 is organized as a 4-bit binary counter. It contains four edge-triggered flip-flops with internal gating and steering logic to provide individual preset, count-up and count-down operations.

Each circuit has an asynchronous parallel load capability permitting the counter to be preset to any desired number. When the Parallel Load ($\overline{PL}$) input is LOW, information present on the Parallel Load inputs (P_0–P_3) is loaded into the counter and appears on the Q outputs. This operation overrides the counting functions, as indicated in the Mode Select Table.

A HIGH signal on the $\overline{CE}$ input inhibits counting. When $\overline{CE}$ is LOW, internal state changes are initiated synchronously by the LOW-to-HIGH transition of the clock input. The direction of counting is determined by the $\overline{U}$/D input signal, as indicated in the Mode Select Table. $\overline{CE}$ and $\overline{U}$/D can be changed with the clock in either state, provided only that the recommended setup and hold times are observed.

Two types of outputs are provided as overflow/underflow indicators. The terminal count (TC) output is normally LOW. It goes HIGH when the circuits reach zero in the count down mode or 15 in the count up mode. The TC output will then remain HIGH until a state change occurs, whether by counting or presetting or until $\overline{U}$/D is changed. The TC output should not be used as a clock signal because it is subject to decoding spikes.

The TC signal is also used internally to enable the Ripple Clock ($\overline{RC}$) output. The $\overline{RC}$ output is normally HIGH. When $\overline{CE}$ is LOW and TC is HIGH, $\overline{RC}$ output will go LOW when the clock next goes LOW and will stay LOW until the clock goes HIGH again. This feature simplifies the design of multistage counters, as indicated in Figure 1 and Figure 2. In Figure 1, each $\overline{RC}$ output is used as the clock input for the next higher stage. This configuration is particularly advantageous when the clock source has a limited drive capability, since it drives only the first stage. To prevent counting in all stages it is only necessary to inhibit the first stage, since a HIGH signal on $\overline{CE}$ inhibits the $\overline{RC}$ output pulse, as indicated in the $\overline{RC}$ Truth Table. A disadvantage of this configuration, in some applications, is the timing skew between state changes in the first and last stages. This represents the cumulative delay of the clock as it ripples through the preceding stages.

A method of causing state changes to occur simultaneously in all stages is shown in Figure 2. All clock inputs are driven in parallel and the $\overline{RC}$ outputs propagate the carry/borrow signals in ripple fashion. In this configuration the LOW state duration of the clock must be long enough to allow the negative-going edge of the carry/borrow signal to ripple through to the last stage before the clock goes HIGH. There is no such restriction on the HIGH state duration of the clock, since the $\overline{RC}$ output of any device goes HIGH shortly after its CP input goes HIGH.

The configuration shown in Figure 3 avoids ripple delays and their associated restrictions. The $\overline{CE}$ input for a given stage is formed by combining the TC signals from all the preceding stages. Note that in order to inhibit counting an enable signal must be included in each carry gate. The simple inhibit scheme of Figure 1 and Figure 2 doesn't apply, because the TC output of a given stage is not affected by its own $\overline{CE}$.

Mode Select Table

Inputs				Mode
$\overline{PL}$	$\overline{CE}$	$\overline{U}$/D	CP	
H	L	L	⎍	Count Up
H	L	H	⎍	Count Down
L	X	X	X	Preset (Asyn.)
H	H	X	X	No Change (Hold)

State Diagram

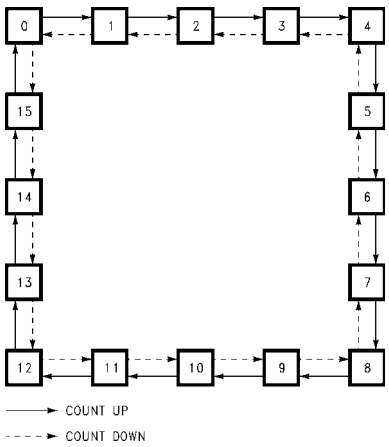

Functional Description (continued)

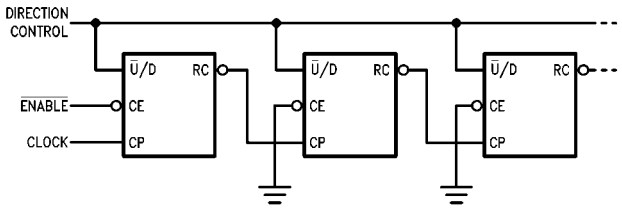

FIGURE 1. N-Stage Counter Using Ripple Clock

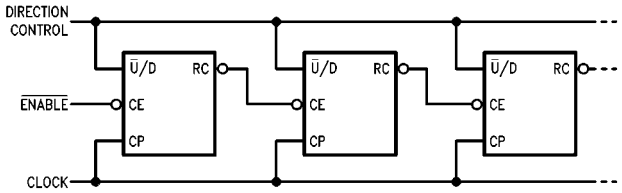

FIGURE 2. Synchronous N-Stage Counter Using Ripple Carry/Borrow

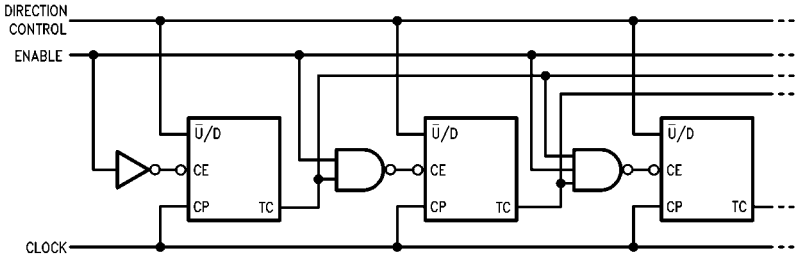

FIGURE 3. Synchronous N-Stage Counter with Parallel Gated Carry/Borrow

Logic Diagram

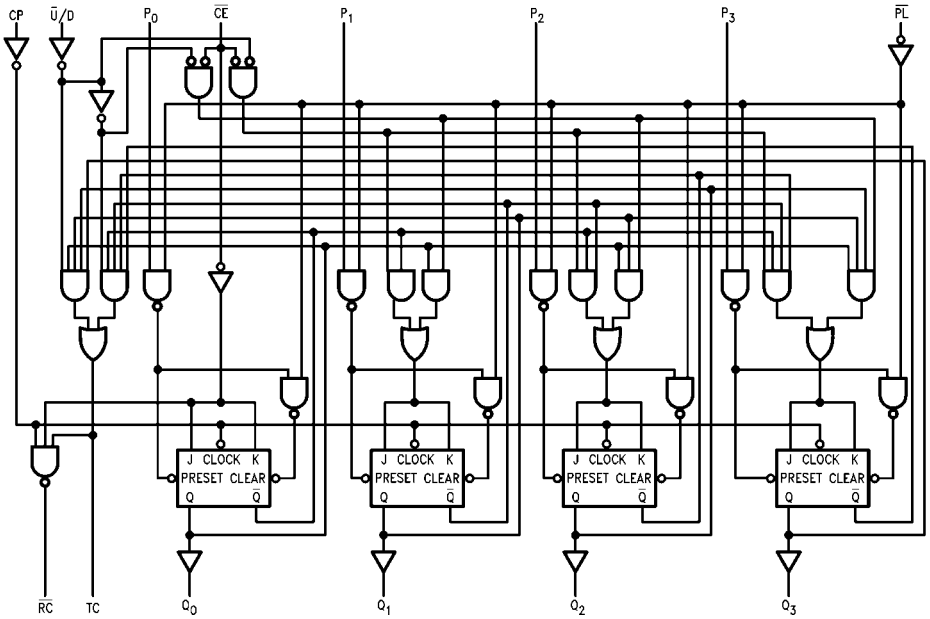

Please note that this diagram is provided only for the understanding of logic operations and should not be used to estimate propagation delays.

Absolute Maximum Ratings (Note 2)

Supply Voltage (V_{CC})	−0.5V to +7.0V
DC Input Diode Current (I_{IK})	
$V_I = -0.5V$	−20 mA
$V_I = V_{CC} + 0.5V$	+20 mA
DC Input Voltage (V_I)	−0.5V to V_{CC} + 0.5V
DC Output Diode Current (I_{OK})	
$V_O = -0.5V$	−20 mA
$V_O = V_{CC} + 0.5V$	+20 mA
DC Output Voltage (V_O)	−0.5V to V_{CC} + 0.5V
DC Output Source or Sink Current (I_O)	±50 mA
DC V_{CC} or Ground Current per Output Pin (I_{CC} or I_{GND})	±50 mA
Storage Temperature (T_{STG})	−65°C to +150°C
Junction Temperature (T_J)	
PDIP	140°C

Recommended Operating Conditions

Supply Voltage (V_{CC})	2.0V to 6.0V
Input Voltage (V_I)	0V to V_{CC}
Output Voltage (V_O)	0V to V_{CC}
Operating Temperature (T_A)	−40°C to +85°C
Minimum Input Edge Rate (ΔV/Δt)	
V_{IN} from 30% to 70% of V_{CC}	
V_{CC} @ 3.3V 4.5V, 5.5V	125 mV/ns

Note 2: Absolute maximum ratings are those values beyond which damage to the device may occur. The databook specifications should be met, without exception, to ensure that the system design is reliable over its power supply, temperature, output/input loading variables. Fairchild does not recommend operation of FACT™ circuits outside databook specifications.

DC Electrical Characteristics

Symbol	Parameter	V_{CC} (V)	T_A = +25°C Typ	T_A = −40°C to +85°C Guaranteed Limits		Units	Conditions
V_{IH}	Minimum HIGH Level Input Voltage	3.0	1.5	2.1	2.1	V	V_{OUT} = 0.1V or V_{CC} − 0.1V
		4.5	2.25	3.15	3.15		
		5.5	2.75	3.85	3.85		
V_{IL}	Maximum LOW Level Input Voltage	3.0	1.5	0.9	0.9	V	V_{OUT} = 0.1V or V_{CC} − 0.1V
		4.5	2.25	1.35	1.35		
		5.5	2.75	1.65	1.65		
V_{OH}	Minimum HIGH Level Output Voltage	3.0	2.99	2.9	2.9	V	I_{OUT} = −50 μA
		4.5	4.49	4.4	4.4		
		5.5	5.49	5.4	5.4		
		3.0		2.56	2.46	V	$V_{IN} = V_{IL}$ or V_{IH}
		4.5		3.86	3.76		I_{OH} −12 mA
		5.5		4.86	4.76		I_{OH} = −24 mA
							I_{OH} = −24 mA (Note 3)
V_{OL}	Maximum LOW Level Output Voltage	3.0	0.002	0.1	0.1	V	I_{OUT} = 50 μA
		4.5	0.001	0.1	0.1		
		5.5	0.001	0.1	0.1		
		3.0		0.36	0.44	V	$V_{IN} = V_{IL}$ or V_{IH}
		4.5		0.36	0.44		I_{OL} = 12 mA
		5.5		0.36	0.44		I_{OL} = 24 mA
							I_{OL} = 24 mA (Note 3)
I_{IN} (Note 5)	Maximum Input Leakage Current	5.5		±0.1	±1.0	μA	$V_I = V_{CC}$, GND
I_{OLD}	Minimum Dynamic Output Current (Note 4)	5.5			75	mA	V_{OLD} = 1.65V Max
I_{OHD}		5.5			−75	mA	V_{OHD} = 3.85V Min
I_{CC} (Note 5)	Maximum Quiescent Supply Current	5.5		4.0	40.0	μA	$V_{IN} = V_{CC}$ or GND

Note 3: All outputs loaded; thresholds on input associated with output under test.

Note 4: Maximum test duration 2.0 ms, one output loaded at a time.

Note 5: I_{IN} and I_{CC} @ 3.0V are guaranteed to be less than or equal to the respective limit @ 5.5V V_{CC}.

AC Electrical Characteristics

Symbol	Parameter	V_{CC} (V) (Note 6)	$C_L = 50$ pF $T_A = +25°C$ Min	Typ	Max	$T_A = -40°C$ to $+85°C$ $C_L = 50$ pF Min	Max	Units
f_{MAX}	Maximum Count Frequency	3.3	70	105		65		MHz
		5.0	90	133		85		
t_{PLH}	Propagation Delay CP to Q_n	3.3	2.0	8.5	15.0	1.5	16.0	ns
		5.0	1.5	6.0	11.0	1.5	12.0	
t_{PHL}	Propagation Delay CP to Q_n	3.3	2.5	8.5	14.5	2.0	16.0	ns
		5.0	1.5	6.0	10.5	1.5	11.5	
t_{PLH}	Propagation Delay CP to TC	3.3	3.5	10.5	18.0	2.5	20.0	ns
		5.0	2.5	7.5	12.0	1.5	14.0	
t_{PHL}	Propagation Delay CP to TC	3.3	4.0	10.5	17.5	3.0	19.0	ns
		5.0	2.5	7.5	12.5	2.0	13.5	
t_{PLH}	Propagation Delay CP to $\overline{RC}$	3.3	2.5	7.5	12.0	2.0	13.5	ns
		5.0	2.0	5.5	9.5	1.0	10.5	
t_{PHL}	Propagation Delay CP to $\overline{RC}$	3.3	2.5	7.0	11.5	2.0	12.5	ns
		5.0	1.5	5.0	8.5	1.0	9.5	
t_{PLH}	Propagation Delay $\overline{CE}$ to $\overline{RC}$	3.3	2.5	7.0	12.0	1.5	13.5	ns
		5.0	1.5	5.0	8.5	1.0	9.5	
t_{PHL}	Propagation Delay $\overline{CE}$ to $\overline{RC}$	3.3	2.0	6.5	11.0	1.5	12.5	ns
		5.0	1.5	5.0	8.0	1.0	9.0	
t_{PLH}	Propagation Delay $\overline{U}$ /D to $\overline{RC}$	3.3	2.5	6.5	12.5	2.0	14.5	ns
		5.0	1.5	5.0	9.0	1.0	10.0	
t_{PHL}	Propagation Delay $\overline{U}$ /D to $\overline{RC}$	3.3	2.5	7.0	12.0	2.0	13.5	ns
		5.0	1.5	5.0	8.5	1.0	10.0	
t_{PLH}	Propagation Delay $\overline{U}$ /D to TC	3.3	2.0	7.0	11.5	1.5	13.5	ns
		5.0	1.5	5.0	8.5	1.0	9.5	
t_{PHL}	Propagation Delay $\overline{U}$ /D to TC	3.3	2.0	6.5	11.0	1.5	12.5	ns
		5.0	1.5	5.0	8.5	1.0	9.5	
t_{PLH}	Propagation Delay P_n to Q_n	3.3	2.5	8.0	13.5	2.0	15.5	ns
		5.0	2.0	5.5	9.5	1.0	10.5	
t_{PHL}	Propagation Delay P_n to Q_n	3.3	2.5	7.5	13.0	1.5	14.5	ns
		5.0	1.5	5.5	9.5	1.0	10.5	
t_{PLH}	Propagation Delay $\overline{PL}$ to Q_n	3.3	3.5	9.5	14.5	2.5	17.5	ns
		5.0	2.0	5.5	9.5	1.0	10.5	
t_{PHL}	Propagation Delay $\overline{PL}$ to Q_n	3.3	3.0	8.0	13.5	2.0	15.5	ns
		5.0	2.0	6.0	10.0	1.5	11.0	

Note 6: Voltage Range 3.3 is 3.3V ± 0.3V
Voltage Range 5.0 is 5.0V ± 0.5V

AC Operating Requirements

Symbol	Parameter	V_{CC} (V) (Note 7)	$T_A = +25°C$, $C_L = 50$ pF Typ	$T_A = +25°C$, $C_L = 50$ pF Guaranteed Minimum	$T_A = -40°C$ to $+85°C$, $C_L = 50$ pF Guaranteed Minimum	Units
t_S	Setup Time, HIGH or LOW	3.3	1.0	3.0	3.0	ns
	P_n to $\overline{PL}$	5.0	0.5	2.0	2.5	
t_H	Hold Time, HIGH or LOW	3.3	–1.5	0.5	1.0	ns
	P_n to $\overline{PL}$	5.0	–0.5	1.0	1.0	
t_S	Setup Time, LOW	3.3	3.0	6.0	7.0	ns
	$\overline{CE}$ to CP	5.0	1.5	4.0	4.5	
t_H	Hold Time, LOW	3.3	–4.0	–0.5	–0.5	ns
	$\overline{CE}$ to CP	5.0	–2.5	0	0	
t_S	Setup Time, HIGH or LOW	3.3	4.0	8.0	9.0	ns
	$\overline{U}$/D to CP	5.0	2.5	5.5	6.5	
t_H	Hold Time, HIGH or LOW	3.3	–5.0	0	0	ns
	$\overline{U}$/D to CP	5.0	–3.0	0.5	0.5	
t_W	$\overline{PL}$ Pulse Width, LOW	3.3	2.0	3.5	4.0	ns
		5.0	1.0	1.0	1.0	
t_W	CP Pulse Width, LOW	3.3	2.0	3.5	4.0	ns
		5.0	2.0	3.0	4.0	
t_{rec}	Recovery Time	3.3	–0.5	0	0	ns
	$\overline{PL}$ to CP	5.0	–1.0	0	0	

Note 7: Voltage Range 3.3 is 3.3V ± 0.3V
Voltage Range 5.0 is 5.0V ± 0.5V

Capacitance

Symbol	Parameter	Typ	Units	Conditions
C_{IN}	Input Capacitance	4.5	pF	V_{CC} = OPEN
C_{PD}	Power Dissipation Capacitance	75.0	pF	V_{CC} = 5.0V

Physical Dimensions inches (millimeters) unless otherwise noted

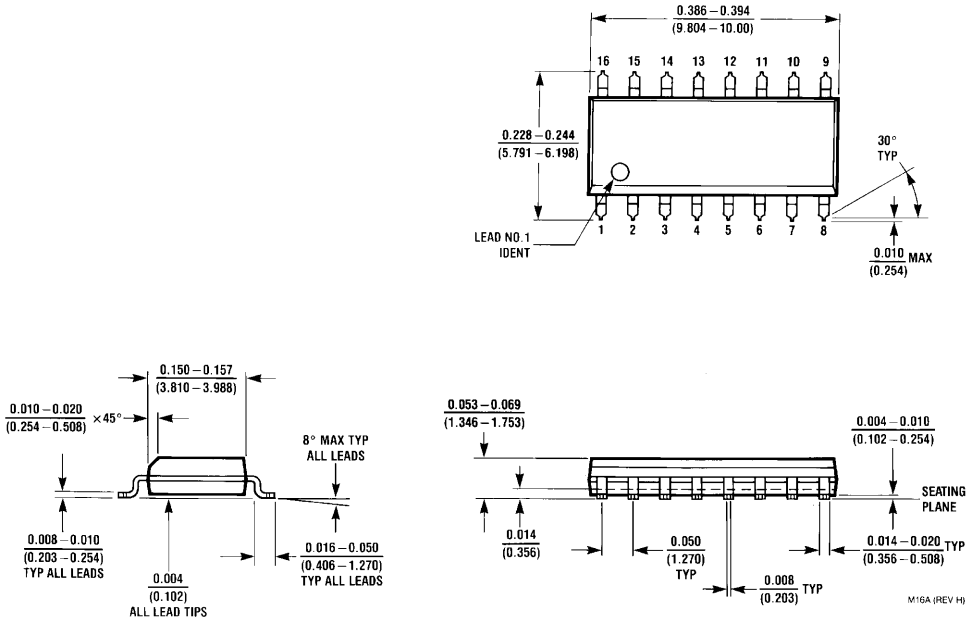

16-Lead Small Outline Integrated Circuit (SOIC), JEDEC MS-012, 0.150" Narrow Body
Package Number M16A

Physical Dimensions inches (millimeters) unless otherwise noted (Continued)

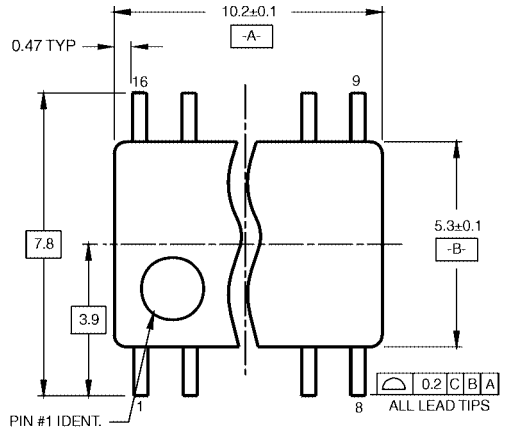

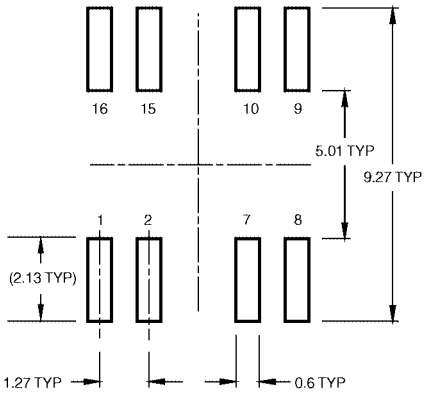

LAND PATTERN RECOMMENDATION

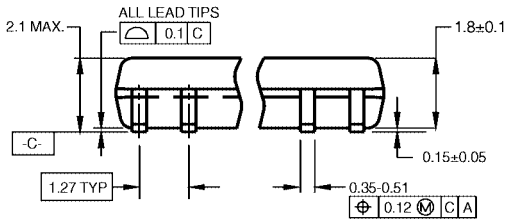

DIMENSIONS ARE IN MILLIMETERS

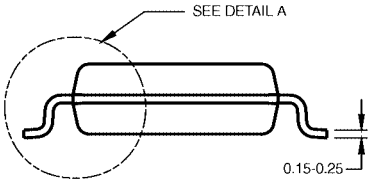

NOTES:

A. CONFORMS TO EIAJ EDR-7320 REGISTRATION, ESTABLISHED IN DECEMBER, 1998.

B. DIMENSIONS ARE IN MILLIMETERS.

C. DIMENSIONS ARE EXCLUSIVE OF BURRS, MOLD FLASH, AND TIE BAR EXTRUSIONS.

M16DRevB1

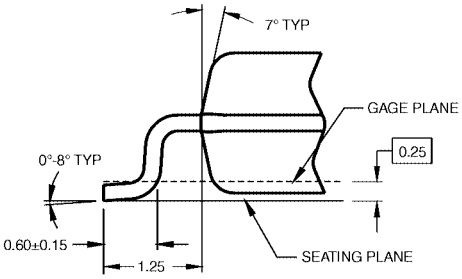

DETAIL A

16-Lead Small Outline Package (SOP), EIAJ TYPE II, 5.3mm Wide
Package Number M16D

Physical Dimensions inches (millimeters) unless otherwise noted (Continued)

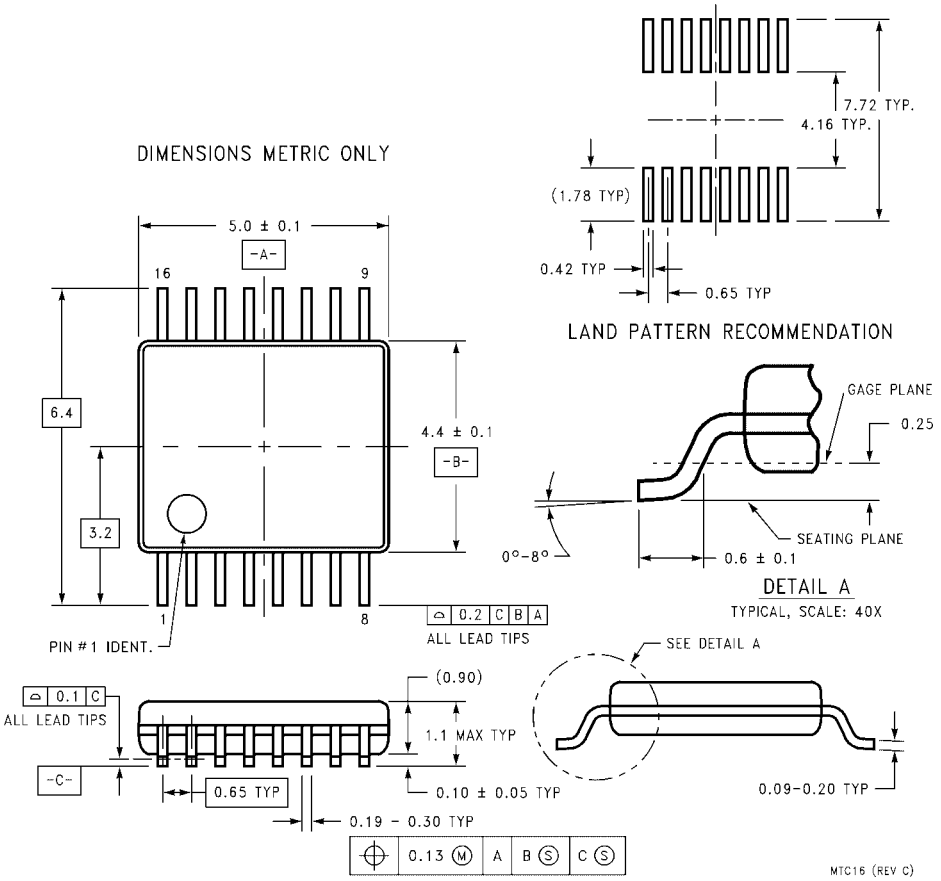

16-Lead Thin Shrink Small Outline Package (TSSOP), JEDEC MO-153, 4.4mm Wide
Package Number MTC16

Physical Dimensions inches (millimeters) unless otherwise noted (Continued)

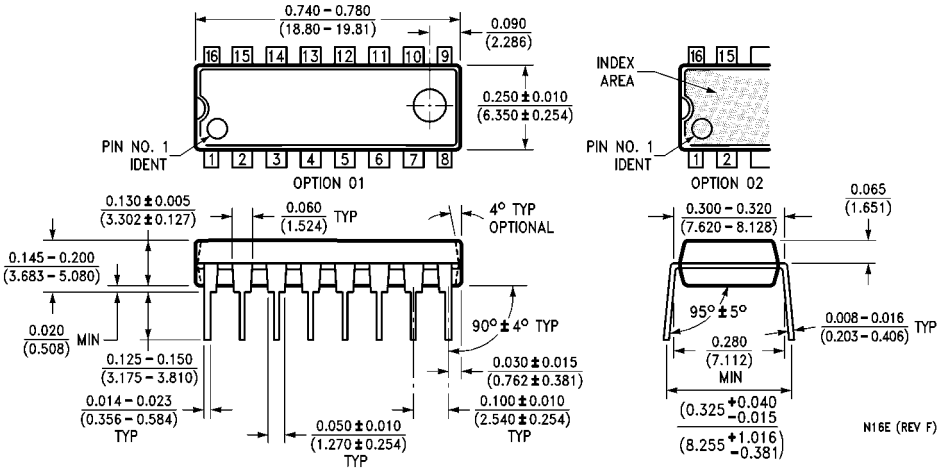

16-Lead Plastic Dual-In-Line Package (PDIP), JEDEC MS-001, 0.300" Wide
Package Number N16E

Fairchild does not assume any responsibility for use of any circuitry described, no circuit patent licenses are implied and Fairchild reserves the right at any time without notice to change said circuitry and specifications.

LIFE SUPPORT POLICY

FAIRCHILD'S PRODUCTS ARE NOT AUTHORIZED FOR USE AS CRITICAL COMPONENTS IN LIFE SUPPORT DEVICES OR SYSTEMS WITHOUT THE EXPRESS WRITTEN APPROVAL OF THE PRESIDENT OF FAIRCHILD SEMICONDUCTOR CORPORATION. As used herein:

1. Life support devices or systems are devices or systems which, (a) are intended for surgical implant into the body, or (b) support or sustain life, and (c) whose failure to perform when properly used in accordance with instructions for use provided in the labeling, can be reasonably expected to result in a significant injury to the user.
2. A critical component in any component of a life support device or system whose failure to perform can be reasonably expected to cause the failure of the life support device or system, or to affect its safety or effectiveness.

www.fairchildsemi.com

OCEAN CHIPS
Океан Электроники
Поставка электронных компонентов

Компания «Океан Электроники» предлагает заключение долгосрочных отношений при поставках импортных электронных компонентов на взаимовыгодных условиях!

Наши преимущества:

- Поставка оригинальных импортных электронных компонентов напрямую с производств Америки, Европы и Азии, а так же с крупнейших складов мира;
- Широкая линейка поставок активных и пассивных импортных электронных компонентов (более 30 млн. наименований);
- Поставка сложных, дефицитных, либо снятых с производства позиций;
- Оперативные сроки поставки под заказ (от 5 рабочих дней);
- Экспресс доставка в любую точку России;
- Помощь Конструкторского Отдела и консультации квалифицированных инженеров;
- Техническая поддержка проекта, помощь в подборе аналогов, поставка прототипов;
- Поставка электронных компонентов под контролем ВП;
- Система менеджмента качества сертифицирована по Международному стандарту ISO 9001;
- При необходимости вся продукция военного и аэрокосмического назначения проходит испытания и сертификацию в лаборатории (по согласованию с заказчиком);
- Поставка специализированных компонентов военного и аэрокосмического уровня качества (Xilinx, Altera, Analog Devices, Intersil, Interpoint, Microsemi, Actel, Aeroflex, Peregrine, VPT, Syfer, Eurofarad, Texas Instruments, MS Kennedy, Miteq, Cobham, E2V, MA-COM, Hittite, Mini-Circuits, General Dynamics и др.);

Компания «Океан Электроники» является официальным дистрибьютором и эксклюзивным представителем в России одного из крупнейших производителей разъемов военного и аэрокосмического назначения **«JONHON»**, а так же официальным дистрибьютором и эксклюзивным представителем в России производителя высокотехнологичных и надежных решений для передачи СВЧ сигналов **«FORSTAR»**.

AVIC JONHON

«JONHON» (основан в 1970 г.)

Разъемы специального, военного и аэрокосмического назначения:

(Применяются в военной, авиационной, аэрокосмической, морской, железнодорожной, горно- и нефтедобывающей отраслях промышленности)

«FORSTAR» (основан в 1998 г.)

ВЧ соединители, коаксиальные кабели, кабельные сборки и микроволновые компоненты:

(Применяются в телекоммуникациях гражданского и специального назначения, в средствах связи, РЛС, а так же военной, авиационной и аэрокосмической отраслях промышленности).

FORSTAR®

Телефон: 8 (812) 309-75-97 (многоканальный)
Факс: 8 (812) 320-03-32
Электронная почта: ocean@oceanchips.ru
Web: http://oceanchips.ru/
Адрес: 198099, г. Санкт-Петербург, ул. Калинина, д. 2, корп. 4, лит. А