GAMMA MICROELECTRONICS

# GM7800 SERIES

POSITIVE VOLTAGE REGULATORS

## Description

The GM7800 series are classic regulators, which are useful in a wide range of applications. For example, you can use them for local on-card regulation to eliminate the distribution and problems associated with single point regulation.

The wide range of output voltages (5V to 27V) make them useful in an endless list of applications. Although designed as fixed voltage regulators, you can add a few external components to make adjustable voltages and currents.

Current limiting prevents the peak output current to a safe value. Safe-area protection of the output transistor limits internal power dissipation. If internal power dissipation becomes too high for the heat sinking provided, the thermal shutdown circuit activates to prevent the regulator from overheating. These versatile workhorses are easy to use. You do not need to bypass the output, although this does improve transient response. Input bypass is needed only if you place the regulator far from the filter capacitor of the power supply.

The GM7800 series is available in TO-220, TO-252 and TO-263 packages.

## Features

- **Output current up to 1.5A**
- **Output Voltages 5V, 6V, 8V, 8.5V, 9V, 10V, 12V, 15V, 18V, 20V, 24V and 27V**
- **3- Terminal Regulators**
- **Internal Thermal Overload Protection**
- **Internal Short-Circuit Current Limiting**
- **Output Transistor Safe-Area Protection**
- **TO-220, TO-252 and TO-263 Packages**
- **High Power Dissipation Capability**
- **Direct replacements for LM78xx**

## Application

**Post-Regulator Switching DC/DC Converters**

**Bias Supply for Analog Circuits**

**Instrumentation and Audio Systems**

**Logic Systems**

**Others too numerous to mention**

## TYPIC APPLICATION CIRCUITS

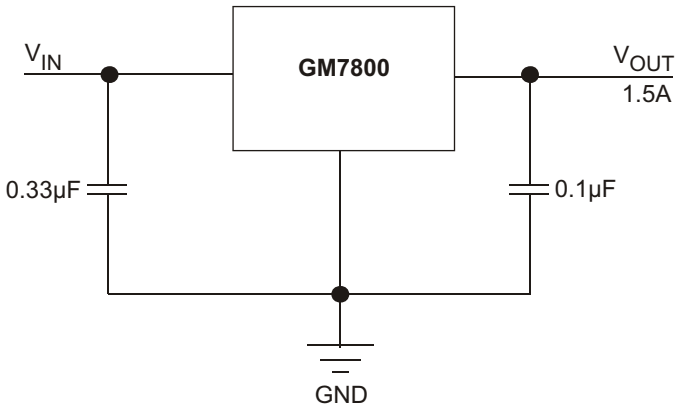


For a positive regulator, a 0.33μF bypass capacitor should be used on the input terminals. While not necessary for stability, an output capacitor of 0.1μF may be used to improve the transient response of the regulator. These capacitors should be on or as near as possible to the regulator terminals .

## ◆ MARKING INFORMATION & PIN CONFIGURATIONS (TOP VIEW)

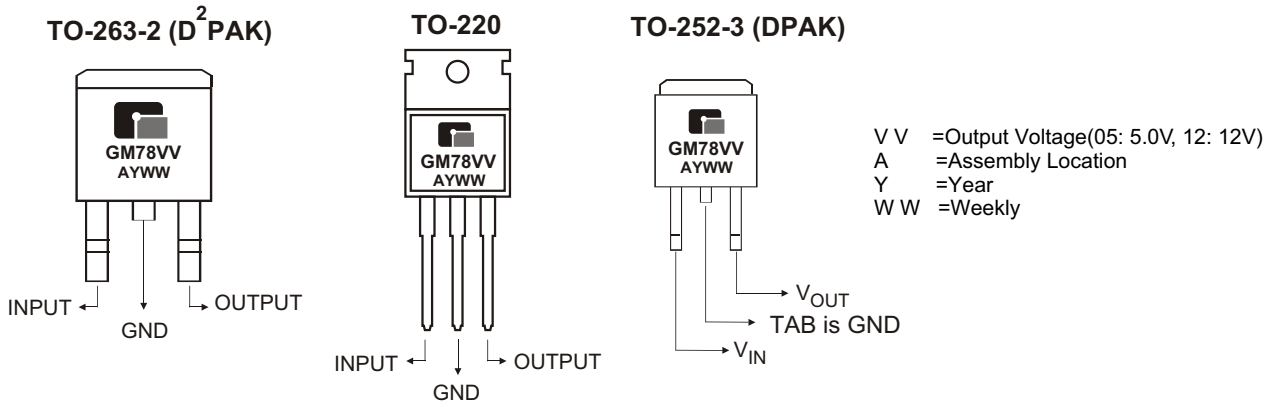


## ◆ ORDERING INFORMATION

| Pro Number | $V_{OUT}$ | Package |
|---|---|---|
| GM7805 | 5.0V | TO-263, TO-220, TO-252 |
| GM7806 | 6.0V | TO-263, TO-220, TO-252 |
| GM7808 | 8.0V | TO-263, TO-220, TO-252 |
| GM7885 | 8.5V | TO-263, TO-220, TO-252 |
| GM7809 | 9.0V | TO-263, TO-220, TO-252 |
| GM7810 | 10V | TO-263, TO-220, TO-252 |
| GM7812 | 12V | TO-263, TO-220, TO-252 |
| GM7815 | 15V | TO-263, TO-220, TO-252 |
| GM7818 | 18V | TO-263, TO-220, TO-252 |
| GM7820 | 20V | TO-263, TO-220, TO-252 |
| GM7824 | 24V | TO-263, TO-220, TO-252 |
| GM7827 | 27V | TO-263, TO-220, TO-252 |

* For detail Ordering Number identification, please see last page.

## ◆ RECOMMENDED OPERATING CONDITIONS ($I_O$= 1.5A)

| PARAMETER | | MIN | MAX | UNIT |
|---|---|---|---|---|
| Input Voltage $V_I$ | GM7805 | 7 | 25 | V |
| | GM7806 | 8 | 25 | |
| | GM7808 | 10.5 | 25 | |
| | GM7885 | 10.5 | 25 | |
| | GM7809 | 11.5 | 27 | |
| | GM7810 | 12.5 | 28 | |
| | GM7812 | 14.5 | 30 | |
| | GM7815 | 17.5 | 30 | |
| | GM7818 | 21 | 33 | |
| | GM7820 | 23 | 36 | |
| | GM7824 | 27 | 38 | |
| | GM7827 | 30 | 40 | |
| Output Current, $I_O$ | | | 1.5 | A |
| Operating virtual junction temperature, $T_J$ | | 0 | 125 | °C |

## ◆ ABSOLUTE MAXIMUM RATINGS

| PARAMETER | | VALUE | UNIT |
|---|---|---|---|
| Input Voltage | GM7824, GM7827 | 40 | V |
| | All others | 35 | |
| Continuous Total Dissipation at 25°C free-air temperature | | 2 | W |
| Continuous Total Dissipation at (or bellow) 25°C case Temperature | | 15 | |
| Operating free-air, case, or virtual junctions Temperature Range | | 0 to +150 | °C |
| Storage Temperature Range | | -65 to +150 | |
| Lead Temperature 1.6mm (1/16 inch) from case for 10seconds | | 260 | |

## ◆ SCHEMATIC BLOCK DIAGRAM

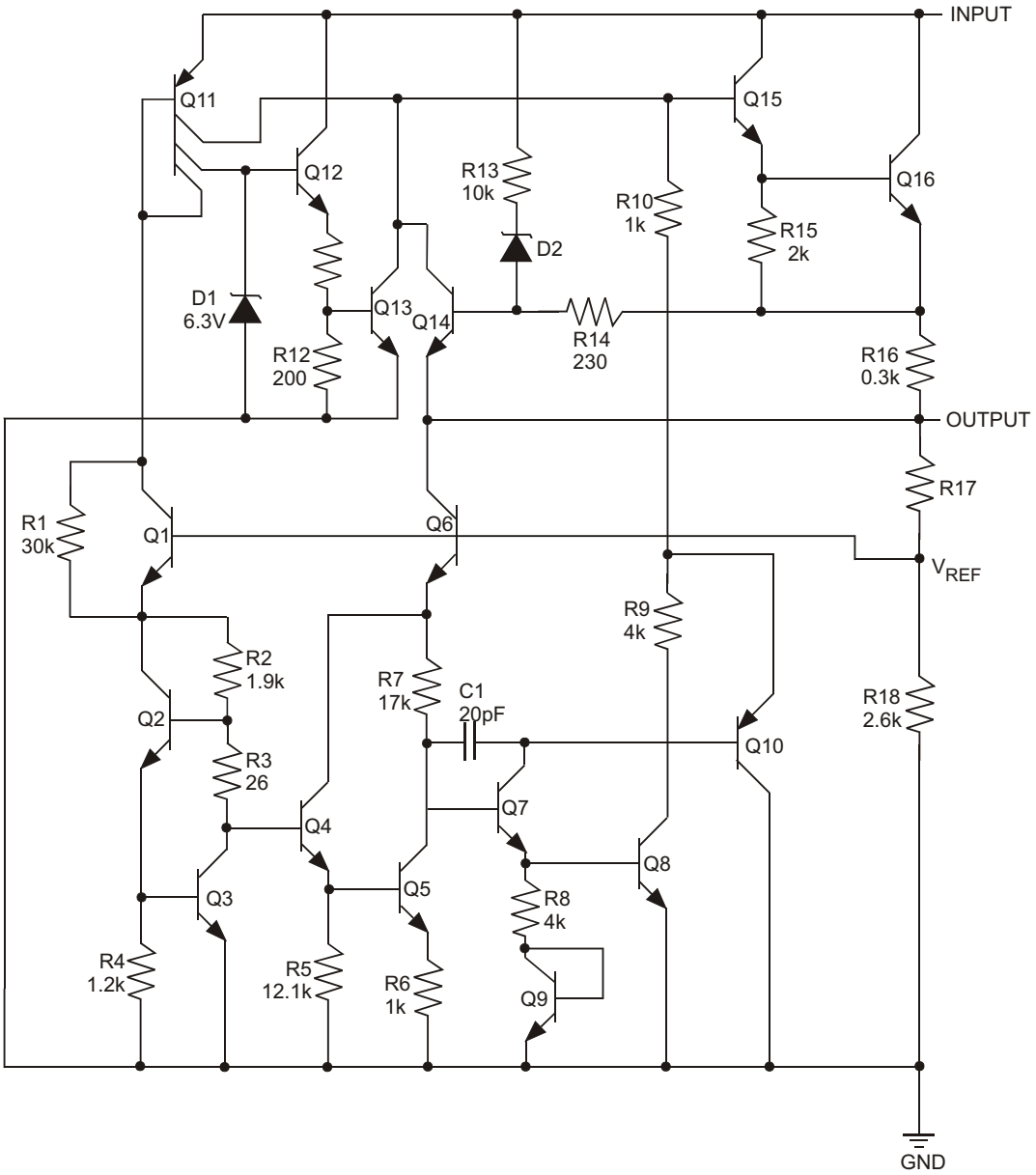

## ◆ ELECTRICAL CHARACTERISTICS at specified Junction Temperature

**GM7805:** $V_I$= 10V, $I_O$= 500mA, (unless otherwise noted)

| CHARACTERISTICS | TEST CONDITIONS * | | MIN | TYP | MAX | UNIT |
|---|---|---|---|---|---|---|
| Output Voltage ** | | 25°C | 4.8 | 5.0 | 5.2 | V |
| | $I_O$= 5mA to 1A<br>$V_I$=7V to 20V, P ≤ 15W | 0°C to 125°C | 4.75 | 5.0 | 5.25 | |
| Input Regulation | $V_I$=7V to 25V | 25°C | | 3 | 100 | mV |
| | $V_I$=8V to 12V | | | 1 | 50 | |
| Ripple Rejection | $V_I$=8V to 18V, f = 120Hz | 0°C to 125°C | 62 | 78 | | dB |
| Output Regulation | $I_O$=5mA to 1.5A | 25°C | | 15 | 100 | mV |
| | $I_O$=250mA to 750mA | | | 5 | 50 | |
| Output Resistance | f = 1kHz | 0°C to 125°C | | 0.017 | | |
| Temperature Coefficient Output Voltage | $I_O$= 5mA | 0°C to 125°C | | -1.1 | | mV/°C |
| Output Noise Voltage | f = 10Hz to 100kHz | 25°C | | 40 | | μV |
| Dropout Voltage | $I_O$= 1A | 25°C | | 2.0 | | V |
| Bias Current | | 25°C | | 4.2 | 8 | mA |
| Bias Current Change | $V_I$= 7V to 25V | 0°C to 125°C | | | 1.3 | mA |
| | $I_O$=5mA to 1A | | | | 0.5 | |
| Short-Circuit Output Current | | 25°C | | 750 | | mA |
| Peak Output Current | | 25°C | | 2.2 | | A |

**GM7806:** $V_I$= 11V, $I_O$= 500mA, (unless otherwise noted)

| CHARACTERISTICS | TEST CONDITIONS * | | MIN | TYP | MAX | UNIT |
|---|---|---|---|---|---|---|
| Output Voltage ** | | 25°C | 5.75 | 6 | 6.25 | V |
| | $I_O$= 5mA to 1A<br>$V_I$=8V to 21V, P ≤ 15W | 0°C to 125°C | 5.7 | 6 | 6.3 | |
| Input Regulation | $V_I$=8V to 25V | 25°C | | 5 | 120 | mV |
| | $V_I$=9V to 13V | | | 1.5 | 60 | |
| Ripple Rejection | $V_I$=9V to 19V, f = 120Hz | 0°C to 125°C | 59 | 75 | | dB |
| Output Regulation | $I_O$=5mA to 1.5A | 25°C | | 14 | 120 | mV |
| | $I_O$=250mA to 750mA | | | 4 | 60 | |
| Output Resistance | f = 1kHz | 0°C to 125°C | | 0.019 | | |
| Temperature Coefficient Output Voltage | $I_O$= 5mA | 0°C to 125°C | | -0.8 | | mV/°C |
| Output Noise Voltage | f = 10Hz to 100kHz | 25°C | | 45 | | μV |
| Dropout Voltage | $I_O$= 1A | 25°C | | 2.0 | | V |
| Bias Current | | 25°C | | 4.3 | 8 | mA |
| Bias Current Change | $V_I$= 8V to 25V | 0°C to 125°C | | | 1.3 | mA |
| | $I_O$=5mA to 1A | | | | 0.5 | |
| Short-Circuit Output Current | | 25°C | | 550 | | mA |
| Peak Output Current | | 25°C | | 2.2 | | A |

*Pulse testing tehniques are used to maintain the junction temperature as close to the ambient temperature as possible. Thermal effects must be taken into account.
** The specification applies only for DC power dissipation permitted by absolute maximum ratings

## ◆ ELECTRICAL CHARACTERISTICS at specified Junction Temperature

**GM7808**: $V_I$=14V, $I_O$=500mA, (unless otherwise noted)

| CHARACTERISTICS | TEST CONDITIONS * | | MIN | TYP | MAX | UNIT |
|---|---|---|---|---|---|---|
| Output Voltage ** | | 25°C | 7.7 | 8 | 8.3 | V |
| | $I_O$= 5mA to 1A<br>$V_I$=10.5V to 23V, P≤ 15W | 0°C to 125°C | 7.6 | 8 | 8.4 | |
| Input Regulation | $V_I$=10.5V to 25V | 25°C | | 6 | 160 | mV |
| | $V_I$=11V to 17V | | | 2 | 80 | |
| Ripple Rejection | $V_I$=11.5V to 21.5V, f = 120Hz | 0°C to 125°C | 55 | 72 | | dB |
| Output Regulation | $I_O$=5mA to 1.5A | 25°C | | 12 | 160 | mV |
| | $I_O$=250mA to 750mA | | | 4 | 80 | |
| Output Resistance | f = 1kHz | 0°C to 125°C | | 0.016 | | |
| Temperature Coefficient Output Voltage | $I_O$= 5mA | 0°C to 125°C | | -0.8 | | mV/°C |
| Output Noise Voltage | f = 10Hz to 100kHz | 25°C | | 52 | | μV |
| Dropout Voltage | $I_O$= 1A | 25°C | | 2.0 | | V |
| Bias Current | | 25°C | | 4.3 | 8 | mA |
| Bias Current Change | $V_I$= 10.5V to 25V | 0°C to 125°C | | | 1.0 | mA |
| | $I_O$=5mA to 1A | | | | 0.5 | |
| Short-Circuit Output Current | | 25°C | | 450 | | mA |
| Peak Output Current | | 25°C | | 2.2 | | A |

**GM7885**: $V_I$=15V, $I_O$=500mA, (unless otherwise noted)

| CHARACTERISTICS | TEST CONDITIONS * | | MIN | TYP | MAX | UNIT |
|---|---|---|---|---|---|---|
| Output Voltage ** | | 25°C | 8.15 | 8.5 | 8.85 | V |
| | $I_O$= 5mA to 1A<br>$V_I$=11.5V to 23.5V, P≤ 15W | 0°C to 125°C | 8.1 | 8.5 | 8.9 | |
| Input Regulation | $V_I$=10.5V to 25V | 25°C | | 6 | 170 | mV |
| | $V_I$=11V to 17V | | | 2 | 85 | |
| Ripple Rejection | $V_I$=11.5V to 21.5V, f = 120Hz | 0°C to 125°C | 54 | 70 | | dB |
| Output Regulation | $I_O$=5mA to 1.5A | 25°C | | 12 | 170 | mV |
| | $I_O$=250mA to 750mA | | | 4 | 85 | |
| Output Resistance | f = 1kHz | 0°C to 125°C | | 0.016 | | |
| Temperature Coefficient Output Voltage | $I_O$= 5mA | 0°C to 125°C | | -0.8 | | mV/°C |
| Output Noise Voltage | f = 10Hz to 100kHz | 25°C | | 55 | | μV |
| Dropout Voltage | $I_O$= 1A | 25°C | | 2.0 | | V |
| Bias Current | | 25°C | | 4.3 | 8 | mA |
| Bias Current Change | $V_I$= 10.5V to 25V | 0°C to 125°C | | | 1.0 | mA |
| | $I_O$=5mA to 1A | | | | 0.5 | |
| Short-Circuit Output Current | | 25°C | | 450 | | mA |
| Peak Output Current | | 25°C | | 2.2 | | A |

*Pulse testing tehniques are used to maintain the junction temperature as close to the ambient temperature as possible. Thermal effects must be taken into account.
** The specification applies only for DC power dissipation permitted by absolute maximum ratings

## ◆ ELECTRICAL CHARACTERISTICS at specified Junction Temperature

**GM7809**: $V_I$=16V, $I_O$=500mA, (unless otherwise noted)

| CHARACTERISTICS | TEST CONDITIONS * | | MIN | TYP | MAX | UNIT |
|---|---|---|---|---|---|---|
| Output Voltage ** | | 25°C | 8.65 | 9 | 9.35 | V |
| | $I_O$= 5mA to 1A<br>$V_I$=11.5V to 24V, P ≤ 15W | 0°C to 125°C | 8.55 | 9 | 9.45 | |
| Input Regulation | $V_I$=11.5V to 27V | 25°C | | 7 | 180 | mV |
| | $V_I$=13V to 19V | | | 2 | 90 | |
| Ripple Rejection | $V_I$=12V to 22V, f = 120Hz | 0°C to 125°C | 55 | 70 | | dB |
| Output Regulation | $I_O$=5mA to 1.5A | 25°C | | 12 | 180 | mV |
| | $I_O$=250mA to 750mA | | | 4 | 90 | |
| Output Resistance | f = 1kHz | 0°C to 125°C | | 0.018 | | |
| Temperature Coefficient Output Voltage | $I_O$= 5mA | 0°C to 125°C | | -1.0 | | mV/°C |
| Output Noise Voltage | f = 10Hz to 100kHz | 25°C | | 60 | | μV |
| Dropout Voltage | $I_O$= 1A | 25°C | | 2.0 | | V |
| Bias Current | | 25°C | | 4.3 | 8 | mA |
| Bias Current Change | $V_I$= 11.5V to 27V | 0°C to 125°C | | | 1.0 | mA |
| | $I_O$=5mA to 1A | | | | 0.5 | |
| Short-Circuit Output Current | | 25°C | | 400 | | mA |
| Peak Output Current | | 25°C | | 2.2 | | A |

**GM7810:** $V_I$= 17V, $I_O$= 500mA, (unless otherwise noted)

| CHARACTERISTICS | TEST CONDITIONS * | | MIN | TYP | MAX | UNIT |
|---|---|---|---|---|---|---|
| Output Voltage ** | | 25°C | 9.6 | 10 | 10.4 | V |
| | $I_O$= 5mA to 1A<br>$V_I$=12.5V to 25V, P ≤ 15W | 0°C to 125°C | 9.5 | 10 | 10.5 | |
| Input Regulation | $V_I$=12.5V to 28V | 25°C | | 7 | 200 | mV |
| | $V_I$=14V to 20V | | | 2 | 100 | |
| Ripple Rejection | $V_I$=13V to 23V, f = 120Hz | 0°C to 125°C | 55 | 71 | | dB |
| Output Regulation | $I_O$=5mA to 1.5A | 25°C | | 12 | 200 | mV |
| | $I_O$=250mA to 750mA | | | 4 | 100 | |
| Output Resistance | f = 1kHz | 0°C to 125°C | | 0.018 | | |
| Temperature Coefficient Output Voltage | $I_O$= 5mA | 0°C to 125°C | | -1.0 | | mV/°C |
| Output Noise Voltage | f = 10Hz to 100kHz | 25°C | | 70 | | μV |
| Dropout Voltage | $I_O$= 1A | 25°C | | 2.0 | | V |
| Bias Current | | 25°C | | 4.3 | 8 | mA |
| Bias Current Change | $V_I$= 12.5V to 28V | 0°C to 125°C | | | 1.0 | mA |
| | $I_O$=5mA to 1A | | | | 0.5 | |
| Short-Circuit Output Current | | 25°C | | 400 | | mA |
| Peak Output Current | | 25°C | | 2.2 | | A |

*Pulse testing tehniques are used to maintain the junction temperature as close to the ambient temperature as possible.
Thermal effects must be taken into account.
** The specification applies only for DC power dissipation permitted by absolute maximum ratings

## ◆ ELECTRICAL CHARACTERISTICS at specified Junction Temperature

**GM7812**: $V_I$=19V, $I_O$=500mA, (unless otherwise noted)

| CHARACTERISTICS | TEST CONDITIONS * | | MIN | TYP | MAX | UNIT |
|---|---|---|---|---|---|---|
| Output Voltage ** | | 25°C | 11.5 | 12 | 12.5 | V |
| | $I_O$= 5mA to 1A<br>$V_I$=14.5V to 27V, P≤ 15W | 0°C to 125°C | 11.4 | 12 | 12.6 | |
| Input Regulation | $V_I$=14.5V to 30V | 25°C | | 10 | 240 | mV |
| | $V_I$=16V to 22V | | | 3 | 120 | |
| Ripple Rejection | $V_I$=15V to 25V, f = 120Hz | 0°C to 125°C | 55 | 71 | | dB |
| Output Regulation | $I_O$=5mA to 1.5A | 25°C | | 12 | 240 | mV |
| | $I_O$=250mA to 750mA | | | 4 | 120 | |
| Output Resistance | f = 1kHz | 0°C to 125°C | | 0.018 | | |
| Temperature Coefficient Output Voltage | $I_O$= 5mA | 0°C to 125°C | | -1.0 | | mV/°C |
| Output Noise Voltage | f = 10Hz to 100kHz | 25°C | | 75 | | μV |
| Dropout Voltage | $I_O$= 1A | 25°C | | 2.0 | | V |
| Bias Current | | 25°C | | 4.3 | 8 | mA |
| Bias Current Change | $V_I$= 14.5V to 30V | 0°C to 125°C | | | 1.0 | mA |
| | $I_O$=5mA to 1A | | | | 0.5 | |
| Short-Circuit Output Current | | 25°C | | 350 | | mA |
| Peak Output Current | | 25°C | | 2.2 | | A |

**GM7815**: $V_I$=23V, $I_O$=500mA, (unless otherwise noted)

| CHARACTERISTICS | TEST CONDITIONS * | | MIN | TYP | MAX | UNIT |
|---|---|---|---|---|---|---|
| Output Voltage ** | | 25°C | 14.4 | 15 | 15.6 | V |
| | $I_O$= 5mA to 1A<br>$V_I$=17.5V to 30V, P≤ 15W | 0°C to 125°C | 14.25 | 15 | 15.75 | |
| Input Regulation | $V_I$=17.5V to 30V | 25°C | | 12 | 300 | mV |
| | $V_I$=20V to 26V | | | 3 | 150 | |
| Ripple Rejection | $V_I$=18.5V to 28.5V, f = 120Hz | 0°C to 125°C | 54 | 70 | | dB |
| Output Regulation | $I_O$=5mA to 1.5A | 25°C | | 12 | 300 | mV |
| | $I_O$=250mA to 750mA | | | 4 | 150 | |
| Output Resistance | f = 1kHz | 0°C to 125°C | | 0.019 | | |
| Temperature Coefficient Output Voltage | $I_O$= 5mA | 0°C to 125°C | | -1.0 | | mV/°C |
| Output Noise Voltage | f = 10Hz to 100kHz | 25°C | | 90 | | μV |
| Dropout Voltage | $I_O$= 1A | 25°C | | 2.0 | | V |
| Bias Current | | 25°C | | 4.3 | 8 | mA |
| Bias Current Change | $V_I$= 17.5V to 30V | 0°C to 125°C | | | 1.0 | mA |
| | $I_O$=5mA to 1A | | | | 0.5 | |
| Short-Circuit Output Current | | 25°C | | 230 | | mA |
| Peak Output Current | | 25°C | | 2.1 | | A |

*Pulse testing tehniques are used to maintain the junction temperature as close to the ambient temperature as possible. Thermal effects must be taken into account.
** The specification applies only for DC power dissipation permitted by absolute maximum ratings

## ◆ ELECTRICAL CHARACTERISTICS at specified Junction Temperature

**GM7818**: $V_I$=27V, $I_O$=500mA, (unless otherwise noted)

| CHARACTERISTICS | TEST CONDITIONS * | | MIN | TYP | MAX | UNIT |
|---|---|---|---|---|---|---|
| Output Voltage ** | | 25°C | 17.3 | 18 | 18.7 | V |
| | $I_O$= 5mA to 1A<br>$V_I$=21V to 33V, P≤ 15W | 0°C to 125°C | 17.1 | 18 | 18.9 | |
| Input Regulation | $V_I$=21V to 33V | 25°C | | 15 | 360 | mV |
| | $V_I$=24V to 30V | | | 5 | 180 | |
| Ripple Rejection | $V_I$=22V to 32V, f = 120Hz | 0°C to 125°C | 53 | 69 | | dB |
| Output Regulation | $I_O$=5mA to 1.5A | 25°C | | 12 | 360 | mV |
| | $I_O$=250mA to 750mA | | | 4 | 180 | |
| Output Resistance | f = 1kHz | 0°C to 125°C | | 0.022 | | |
| Temperature Coefficient Output Voltage | $I_O$= 5mA | 0°C to 125°C | | -1.0 | | mV/°C |
| Output Noise Voltage | f = 10Hz to 100kHz | 25°C | | 110 | | μV |
| Dropout Voltage | $I_O$= 1A | 25°C | | 2.0 | | V |
| Bias Current | | 25°C | | 4.5 | 8 | mA |
| Bias Current Change | $V_I$= 21V to 33V | 0°C to 125°C | | | 1.0 | mA |
| | $I_O$=5mA to 1A | | | | 0.5 | |
| Short-Circuit Output Current | | 25°C | | 200 | | mA |
| Peak Output Current | | 25°C | | 2.1 | | A |

**GM7820**: $V_I$=29V, $I_O$=500mA, (unless otherwise noted)

| CHARACTERISTICS | TEST CONDITIONS * | | MIN | TYP | MAX | UNIT |
|---|---|---|---|---|---|---|
| Output Voltage ** | | 25°C | 19.2 | 20 | 20.8 | V |
| | $I_O$= 5mA to 1A<br>$V_I$=23V to 35V, P≤ 15W | 0°C to 125°C | 19 | 20 | 21 | |
| Input Regulation | $V_I$=23V to 35V | 25°C | | 18 | 400 | mV |
| | $V_I$=26V to 32V | | | 7 | 200 | |
| Ripple Rejection | $V_I$=24V to 34V, f = 120Hz | 0°C to 125°C | 51 | 66 | | dB |
| Output Regulation | $I_O$=5mA to 1.5A | 25°C | | 15 | 400 | mV |
| | $I_O$=250mA to 750mA | | | 7 | 200 | |
| Output Resistance | f = 1kHz | 0°C to 125°C | | 0.027 | | |
| Temperature Coefficient Output Voltage | $I_O$= 5mA | 0°C to 125°C | | -1.3 | | mV/°C |
| Output Noise Voltage | f = 10Hz to 100kHz | 25°C | | 150 | | μV |
| Dropout Voltage | $I_O$= 1A | 25°C | | 2.0 | | V |
| Bias Current | | 25°C | | 4.5 | 8 | mA |
| Bias Current Change | $V_I$= 23V to 35V | 0°C to 125°C | | | 1.0 | mA |
| | $I_O$=5mA to 1A | | | | 0.5 | |
| Short-Circuit Output Current | | 25°C | | 180 | | mA |
| Peak Output Current | | 25°C | | 2.1 | | A |

*Pulse testing tehniques are used to maintain the junction temperature as close to the ambient temperature as possible.
Thermal effects must be taken into account.
** The specification applies only for DC power dissipation permitted by absolute maximum ratings

## ◆ ELECTRICAL CHARACTERISTICS at specified Junction Temperature

**GM7824**: $V_I$=33V, $I_O$=500mA, (unless otherwise noted)

| CHARACTERISTICS | TEST CONDITIONS * | | MIN | TYP | MAX | UNIT |
|---|---|---|---|---|---|---|
| Output Voltage ** | | 25°C | 23 | 24 | 25 | V |
| | $I_O$= 5mA to 1A<br>$V_I$=27V to 38V, P≤ 15W | 0°C to 125°C | 22.8 | 24 | 25.2 | |
| Input Regulation | $V_I$=27V to 38V | 25°C | | 18 | 480 | mV |
| | $V_I$=30V to 36V | | | 6 | 240 | |
| Ripple Rejection | $V_I$=28V to 32V, f = 120Hz | 0°C to 125°C | 50 | 66 | | dB |
| Output Regulation | $I_O$=5mA to 1.5A | 25°C | | 12 | 480 | mV |
| | $I_O$=250mA to 750mA | | | 4 | 240 | |
| Output Resistance | f = 1kHz | 0°C to 125°C | | 0.028 | | |
| Temperature Coefficient Output Voltage | $I_O$= 5mA | 0°C to 125°C | | -1.5 | | mV/°C |
| Output Noise Voltage | f = 10Hz to 100kHz | 25°C | | 170 | | μV |
| Dropout Voltage | $I_O$= 1A | 25°C | | 2.0 | | V |
| Bias Current | | 25°C | | 4.6 | 8 | mA |
| Bias Current Change | $V_I$= 27V to 38V | 0°C to 125°C | | | 1.0 | mA |
| | $I_O$=5mA to 1A | | | | 0.5 | |
| Short-Circuit Output Current | | 25°C | | 150 | | mA |
| Peak Output Current | | 25°C | | 2.1 | | A |

**GM7827**: $V_I$=36V, $I_O$=500mA, (unless otherwise noted)

| CHARACTERISTICS | TEST CONDITIONS * | | MIN | TYP | MAX | UNIT |
|---|---|---|---|---|---|---|
| Output Voltage ** | | 25°C | 25.9 | 27 | 28.1 | V |
| | $I_O$= 5mA to 1A<br>$V_I$=30V to 40V, P≤ 15W | 0°C to 125°C | 25.7 | 27 | 28.3 | |
| Input Regulation | $V_I$=30V to 40V | 25°C | | 25 | 540 | mV |
| | $V_I$=33V to 39V | | | 10 | 270 | |
| Ripple Rejection | $V_I$=30V to 40V, f = 120Hz | 0°C to 125°C | 50 | 64 | | dB |
| Output Regulation | $I_O$=5mA to 1.5A | 25°C | | 20 | 540 | mV |
| | $I_O$=250mA to 750mA | | | 9 | 270 | |
| Output Resistance | f = 1kHz | 0°C to 125°C | | 0.030 | | |
| Temperature Coefficient Output Voltage | $I_O$= 5mA | 0°C to 125°C | | -1.6 | | mV/°C |
| Output Noise Voltage | f = 10Hz to 100kHz | 25°C | | 200 | | μV |
| Dropout Voltage | $I_O$= 1A | 25°C | | 2.0 | | V |
| Bias Current | | 25°C | | 4.8 | 8 | mA |
| Bias Current Change | $V_I$= 30V to 40V | 0°C to 125°C | | | 1.0 | mA |
| | $I_O$=5mA to 1A | | | | 0.5 | |
| Short-Circuit Output Current | | 25°C | | 120 | | mA |
| Peak Output Current | | 25°C | | 2.1 | | A |

*Pulse testing tehniques are used to maintain the junction temperature as close to the ambient temperature as possible.
Thermal effects must be taken into account.
** The specification applies only for DC power dissipation permitted by absolute maximum ratings

## ◆ TO-263-2 PACKAGE OUTLINE DIMENSIONS

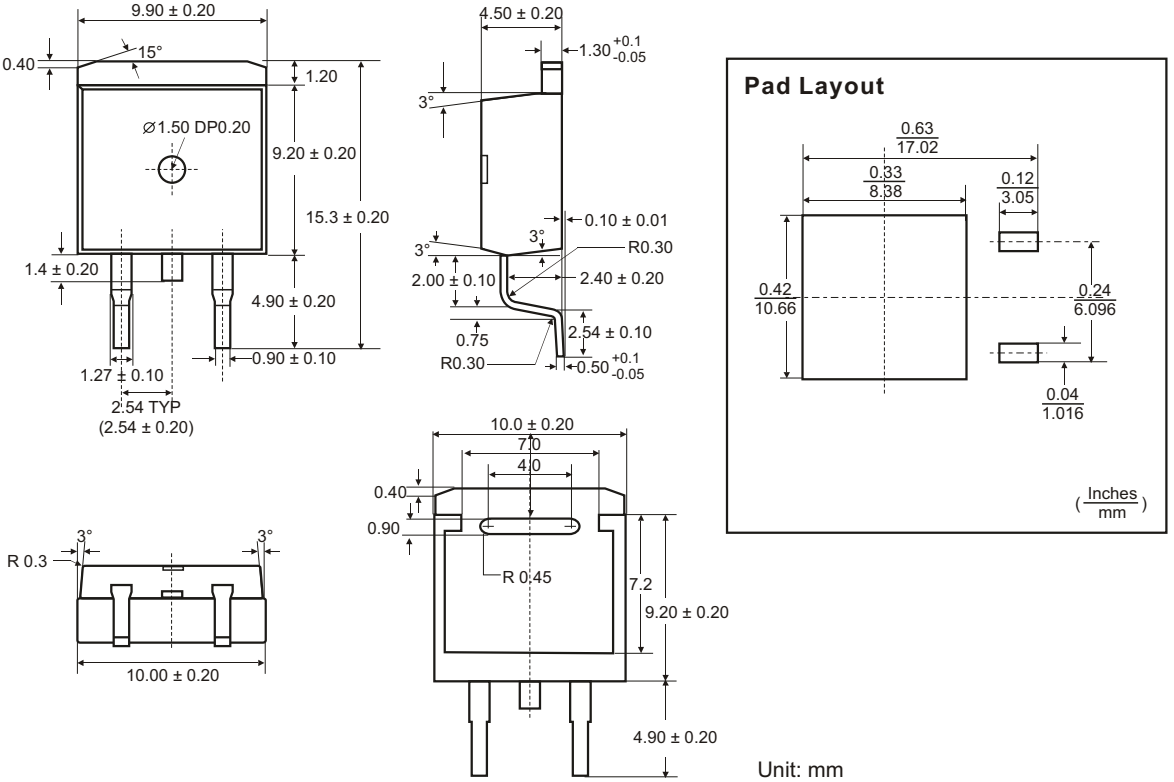


## ◆ TO-220 PACKAGE OUTLINE DIMENSIONS

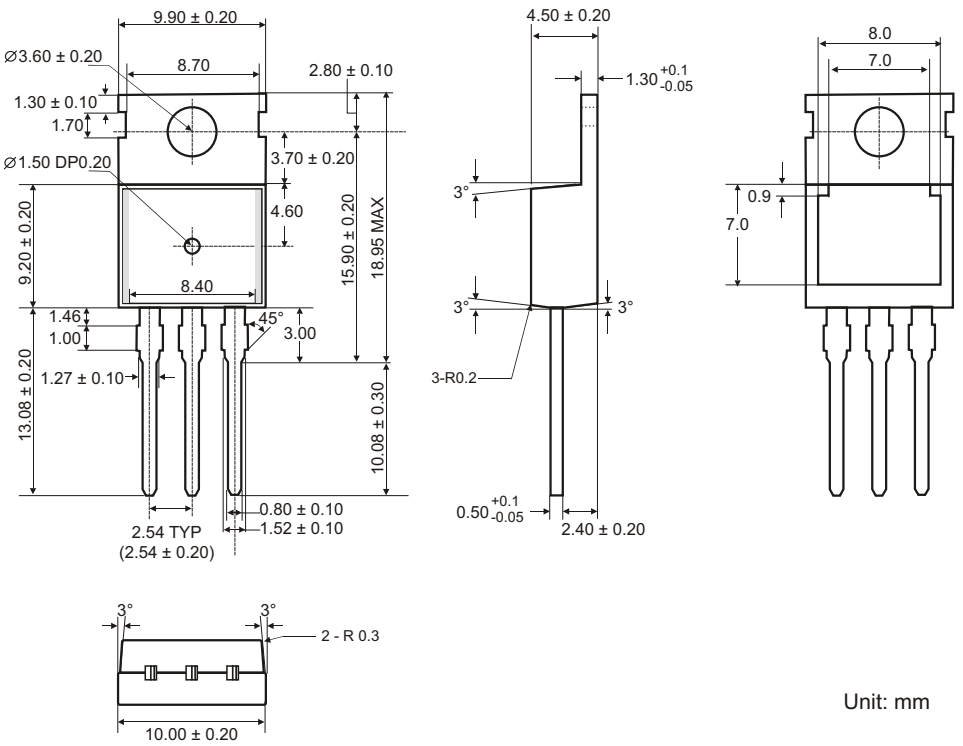

## ◆ TO-252 PACKAGE OUTLINE DIMENSIONS

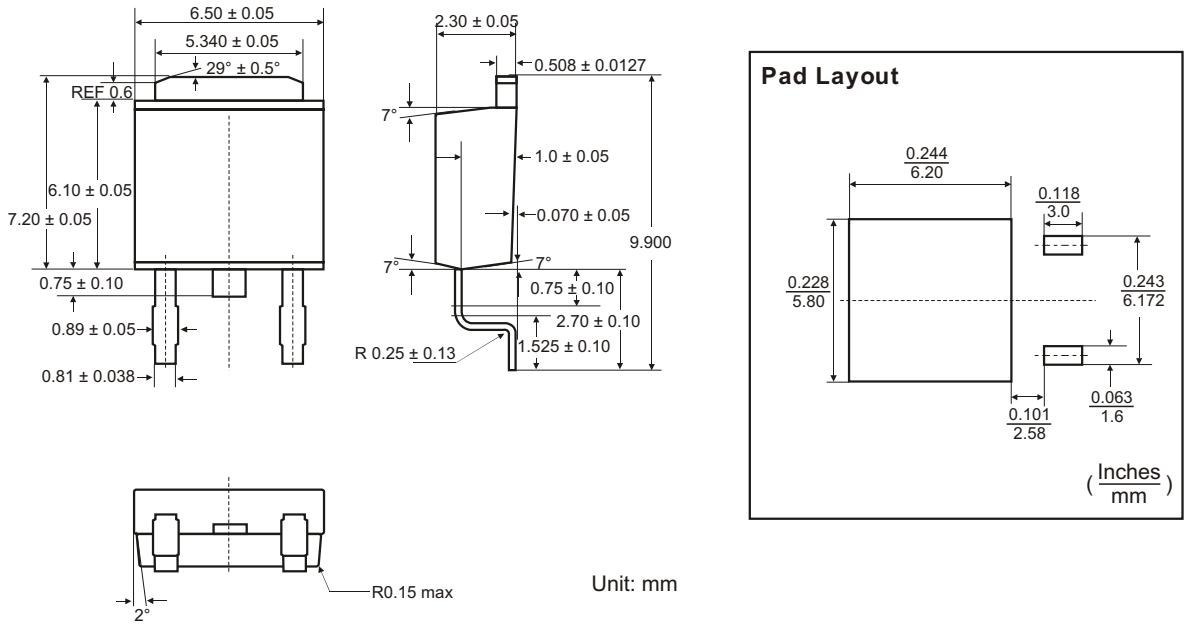


## ◆ ORDERING NUMBER

**GM 78 00 TA3 T**

Gamma Micro.

Circuit Type

Output Voltage
05: 5.0V, 06: 6.0V
08: 8.0V, 8.5:8.5V
09: 9.0V, 10:10V
12: 12V, 15: 15V
18: 18V, 20: 20V
24: 24V, 27: 27V

Shipping
R: Tape & Reel
T: Tube

Package
TA3: TO-263
50 Units/ Tube
800 Units/ Tape & Reel

TB3: TO-220
80 Units/ Tube

TC3: TO-252
80 Units/ Tube
2,500 Units/ Tape & Reel

GAMMA Micro, GAMMA and are registered trademarks of GAMMA MICROELECTRONICS INC. GAMMA reserves the right to make changes without further notice to any products herein.

Information provided herein is alleged to be exact and consistent and this publication surpasses and replaces all information previously supplied.

GAMMA makes no warranty the suitability of its products for any particular purpose, nor does GAMMA assume any liability arising out of the application or use of any product or circuit, and specifically disclaims any and all liability including without limitation special, consequential or incidental damages.

GAMMA products are not authorized for using as critical components in life support devices or systems without prior written approval from GAMMA MICROELECTRONICS INC.

# OCEAN CHIPS
## Океан Электроники
### Поставка электронных компонентов

Компания «Океан Электроники» предлагает заключение долгосрочных отношений при поставках импортных электронных компонентов на взаимовыгодных условиях!

Наши преимущества:

- Поставка оригинальных импортных электронных компонентов напрямую с производств Америки, Европы и Азии, а так же с крупнейших складов мира;
- Широкая линейка поставок активных и пассивных импортных электронных компонентов (более 30 млн. наименований);
- Поставка сложных, дефицитных, либо снятых с производства позиций;
- Оперативные сроки поставки под заказ (от 5 рабочих дней);
- Экспресс доставка в любую точку России;
- Помощь Конструкторского Отдела и консультации квалифицированных инженеров;
- Техническая поддержка проекта, помощь в подборе аналогов, поставка прототипов;
- Поставка электронных компонентов под контролем ВП;
- Система менеджмента качества сертифицирована по Международному стандарту ISO 9001;
- При необходимости вся продукция военного и аэрокосмического назначения проходит испытания и сертификацию в лаборатории (по согласованию с заказчиком);
- Поставка специализированных компонентов военного и аэрокосмического уровня качества (Xilinx, Altera, Analog Devices, Intersil, Interpoint, Microsemi, Actel, Aeroflex, Peregrine, VPT, Syfer, Eurofarad, Texas Instruments, MS Kennedy, Miteq, Cobham, E2V, MA-COM, Hittite, Mini-Circuits, General Dynamics и др.);

Компания «Океан Электроники» является официальным дистрибьютором и эксклюзивным представителем в России одного из крупнейших производителей разъемов военного и аэрокосмического назначения **«JONHON»**, а так же официальным дистрибьютором и эксклюзивным представителем в России производителя высокотехнологичных и надежных решений для передачи СВЧ сигналов **«FORSTAR»**.

AVIC JONHON

**«JONHON»** (основан в 1970 г.)

Разъемы специального, военного и аэрокосмического назначения:

(Применяются в военной, авиационной, аэрокосмической, морской, железнодорожной, горно- и нефтедобывающей отраслях промышленности)

**«FORSTAR»** (основан в 1998 г.)

ВЧ соединители, коаксиальные кабели, кабельные сборки и микроволновые компоненты:

(Применяются в телекоммуникациях гражданского и специального назначения, в средствах связи, РЛС, а так же военной, авиационной и аэрокосмической отраслях промышленности).

FORSTAR®

Телефон: 8 (812) 309-75-97 (многоканальный)
Факс: 8 (812) 320-03-32
Электронная почта: ocean@oceanchips.ru
Web: http://oceanchips.ru/
Адрес: 198099, г. Санкт-Петербург, ул. Калинина, д. 2, корп. 4, лит. А